T. O. 1C-45G-4

TECHNICAL MANUAL

ILLUSTRATED PARTS BREAKDOWN

USAF SERIES

C-45H
TC-45H

AIRCRAFT

THIS PUBLICATION REPLACES T.O. 1C-45G-4 DATED 15 OCTOBER 1954

PUBLISHED UNDER AUTHORITY OF THE SECRETARY OF THE AIR FORCE

"NOT LIABLE FOR ACCURACY AND EFFECTIVENESS OF ORIGINAL TEXT."

AIR FORCE. GRIT PRINTING CO., 1/16/59—4300 (BEECH ACFT. CORP.)

25 NOVEMBER 1958

Reproduction for non-military use of the information or illustrations contained in this publication is not permitted without specific approval of the issuing service (BuAer or AMC). The policy for use of Classified Publications is established for the Air Force in AFR 205-1 and for the Navy in Navy Regulations, Article 1509.

LIST OF EFFECTIVE PAGES

INSERT LATEST CHANGED PAGES. DESTROY SUPERSEDED PAGES.

NOTE: The portion of the text affected by the change is indicated by a vertical line in the outer margin of the page.

TOTAL NUMBER OF PAGES IN THIS PUBLICATION IS 355 CONSISTING OF THE FOLLOWING:

Page No.	*Issue*
Title and A.....	25 November 1958
i thru iv	25 November 1958
1 thru 349	25 November 1958

* The asterisk indicates pages changed, added or deleted by the current change.

ADDITIONAL COPIES OF THIS PUBLICATION MAY BE OBTAINED AS FOLLOWS:

USAF ACTIVITIES. — In accordance with Technical Order No. 00-5-2.

NAVY ACTIVITIES. — Submit request to nearest supply point listed below, using form NavAer-140; NASD, Philadelphia, Pa.; NAS, Alameda, Calif.; NAS, Jacksonville, Fla.; NAS, Norfolk, Va.; NAS, San Diego, Calif.; NAS, Seattle, Wash.; ASD, NSC, Guam.

For listing of available material and details of distribution see Naval Aeronautics Publications Index NavAer 00-500.

TABLE OF CONTENTS

Section		Page Number
I	INTRODUCTION	1
II	GROUP ASSEMBLY PARTS LIST	9
	Fuselage Structure Assembly	10
	Windshield and Pilot's Window Installation	12
	Cabin Door Installation	15
	Nose Baggage Door Assembly	18
	Emergency Exit Hatch Assembly	21
	Astrodome Assembly	23
	Tail Surface Installation	24
	Stabilizer Assembly	27
	Covered Elevator Assembly	31
	Fin Assembly	34
	Covered Rudder Assembly	36
	Center Section Wing Assembly	38
	Firewall Installation	43
	Firewall Assembly	46
	Landing Gear Door Installation	48
	Outboard Wing Assembly LH	50
	Outboard Wing Assembly RH	54
	Aileron Assembly	58
	Covered Flap Assembly	61
	Landing Gear Installation (Sheet 1 of 2 Sheets)	62
	Landing Gear Installation (Sheet 2 of 2 Sheets)	63
	Landing Gear Drag Leg Assembly	67
	Landing Gear Shock Absorber Assembly	68
	Landing Gear Retract Mechanism Installation	71
	Landing Gear Retract Assembly	75
	Landing Gear and Flap Handcrank Support Assembly	77
	Dual Brake System Installation	78
	Brake System Plumbing Installation	82
	Brake Master Cylinder Assembly	85
	Tail Wheel and Controls Installation (Sheet 1 of 2 Sheets)	87
	Tail Wheel and Controls Installation (Sheet 2 of 2 Sheets)	88
	Tail Wheel Shock Absorber Assembly	92
	Tail Wheel and Controls Installation (Sheet 1 of 2 Sheets)	93
	Tail Wheel and Controls Installation (Sheet 2 of 2 Sheets)	94
	Power Plant Installation (Sheet 1 of 2 Sheets)	98
	Power Plant Installation (Sheet 2 of 2 Sheets)	99
	Engine Exhaust System Installation	104
	Cowling Assembly	106
	Carburetor Heater Muff Installation LH	110

Table of Contents (Continued)

Section		Page Number
	Carburetor Heater Muff Installation RH	113
	Carburetor Air Scoop and Duct Installation	116
	Engine Baffle Installation	119
	Hydromatic Propeller Installation	120
	Constant Speed Propeller Control Installation	123
	Engine Section Vacuum System Installation	125
	Body Vacuum System Piping Installation	127
	Centralized Air Filter Installation	129
	Centralized Air Filter Installation	131
	Engine Instrument Piping Installation	132
	Piping Support Installation	134
	Anti-Icer Piping Installation	136
	Hydromatic Propeller Anti-Icer Installation	139
	De-Icer System Piping Installation	142
	Engine Control Installation	146
	Pedestal Control Installation	150
	Pedestal Control Installation	155
	Landing Gear Switch Assembly	160
	Nacelle Oil System Installation	163
	Nacelle Oil Tank Installation	167
	Baggage Compartment Fuel Tank Installation	169
	Wing Fuel Tank Installation	172
	Fuel System Installation	178
	Fuel Tank Vent Line Installation	182
	Aileron Control Installation	184
	Aileron Tab Installation	187
	Rudder Control Installation	189
	Rudder Tab and Indicator Installation	192
	Elevator Control Installation	196
	Elevator Tab Control Installation	200
	Torque Shaft and Control Column Assembly	203
	Automatic Pilot Cable Installation	206
	Gyro Pilot Mounting Structure Installation	208
	Lower Servo Pulley Bracket Installation	211
	Gyro Pilot Piping Installation	213
	Wing Flap Mechanism Installation	220
	Flap Control Drive Assembly	224
	Flap Control Gear Box Assembly	226
	Wing Flap Clutch Mechanism and Motor Assembly	228
	Wing Flap Motor Assembly	230
	Pitot and Static Pressure Line Installation	231
	Floating Panel Assembly (C-45H and TC-45H)	234
	Floating Panel Assembly (C-45H)	236
	Instrument Piping Assembly	238
	Instrument Subpanel Assembly	240
	Instrument Panel Installation	242
	Fire Extinguisher Installation	244
	Fuselage CB Fire Extinguisher Installation	247
	Engine Section CB Fire Extinguisher Installation	249

Table of Contents (Continued)

Section		Page Number
	Low Pressure Oxygen Equipment Installation.	250
	Heat and Ventilation System Installation.	254
	Wing and Stabilizer De-Icer Installation.	258
	Static Wick and Ground Installation .	259
	Windshield Wiper Installation . . .	260
	Miscellaneous Loose Equipment Installation.	262
	Center Section Electrical Equipment Installation.	263
	Battery Installation.	268
	Fuselage Electrical Equipment Installation (Sheet 1 of 2 Sheets). .	269
	Fuselage Electrical Equipment Installation (Sheet 2 of 2 Sheets). .	270
	Generator Control Box Assembly . .	278
	Firewall Electrical Equipment Installation.	280
	Radio Equipment Installation (Sheet 1 of 2 Sheets).	283
	Radio Equipment Installation (Sheet 2 of 2 Sheets).	284
	Radio Equipment Control Panel Installation.	293
	Furnishing Installation	296
	Pilot's Compartment Floorboard Installation.	302
	Cabin Floor Installation	305
	Cabin Seat Assembly	308
	Pilot's Compartment Chair Assembly	310
	Lavatory Compartment Installation.	313
	Navigator's Table and Seat Assembly	316
	Navigator's Instrument Panel Assembly	319
III	NUMERICAL PARTS LIST	323

BLANK PAGE

SECTION I

INTRODUCTION

1. GENERAL.

This Illustrated Parts Breakdown lists and illustrates information concerning the C-45H & TC-45H aircraft, which are manufactured by BEECH AIRCRAFT CORPORATION, Wichita 1, Kansas. The C-45H is used to transport personnel or cargo; the TC-45H being used primarily as a navigational trainer. All models are basically the same and many parts used on the C-45H are identical to those used on the TC-45H. Some parts, however, are characteristic of only one model; a parts application code system is employed to identify the model aircraft on which the parts should be used. The code system for parts application which is employed in the breakdown is explained in paragraph 7. A major illustration of the aircraft is seen in figure 1, which is the last figure in the Introduction.

2. ARRANGEMENT.

This breakdown is divided into three sections for the purpose of clarification and cross indexing, as follows:

Section I Introduction

Section II Group Assembly Parts List

Section III Numerical Parts List

3. GROUP ASSEMBLY PARTS LIST (SECTION II).

This section contains the major portion of the breakdown, and is composed of parts listings keyed to indexed illustrations. The following illustrated paragraphs explain the correct usage of the parts listings as well as the relationship between the parts list and the illustrations.

Column Listings and Illustrations

Each parts list in this breakdown contains the information necessary to completely identify the part on the accompanying illustration, list the part number, give the correct nomenclature and show the correct quantity per item. A section of the parts list is shown below.

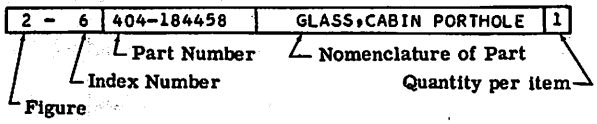

The part listed in the above example would be found in figure 2 and have an index number of 6.

Government or Vendor Furnished Parts

When parts are furnished by the Government, or supplied by a vendor, or both, the illustration below shows how this designation will appear in the parts list.

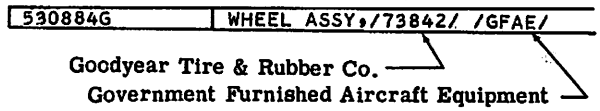

Vendor items which are listed in this breakdown are items furnished by manufacturers other than BEECH AIRCRAFT CORPORATION, and all vendor items are designated by a manufacturer's code symbol following the name of the part called out in the parts list. The vendor symbols used in the parts lists are explained in a subsequent paragraph of the Introduction.

Left Hand, Right Hand Parts and Dash Numbers

When a part is used ONLY on one side of an installation or aircraft, and a HIGHLY SIMILAR part (often with the same nomenclature) appears in the identical place on the other side of the installation or aircraft, the designation LH (left hand) or RH (right hand) will appear in the parts list. A dash number will be shown in the manufacturer's part number to make the distinction between the two highly similar parts. The illustration below shows this occurrence.

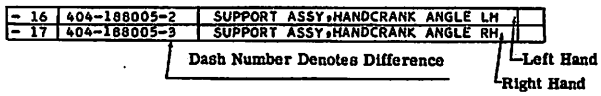

Both right and left hand parts may carry a dash number. EVEN dash numbers indicate a left hand part, while ODD dash numbers indicate a right hand part.

Indention of Parts List and Attaching Parts

The parts list has been set up with an indention system to show engineering sequence or relationship of any part or assembly listed in this breakdown.

(1) Main Groups.

This breakdown, for clarification, has been divided into groups. Main groups may consist of major assemblies or complete installations; these major components are listed in column 1 of the parts list.

(2) Assemblies.
All main groups have been broken down into the major components of that group. These components are called assemblies and are listed in column 2 of the parts list.

(3) Subassemblies or Detailed Parts.
When it is required to further break down an assembly, depending upon the construction, the parts thus broken down or subassemblies are listed in column 3, 4 or 5 of the parts list. Parts listed in column 3 are components of the preceding part listed in column 2. Parts listed in column 4 are components of the preceding part listed in column 3, etc.

(4) Attaching Parts.
Nuts, bolts, screws, etc., which are used to affix one part to another, are called "ATTACHING PARTS" and are shown in the nomenclature block DIRECTLY below the part which they affix.

Items designated as "ATTACHING PARTS" are followed by a line and asterisk. The following illustration is an extract from the manual and used to explain indention and attaching parts.

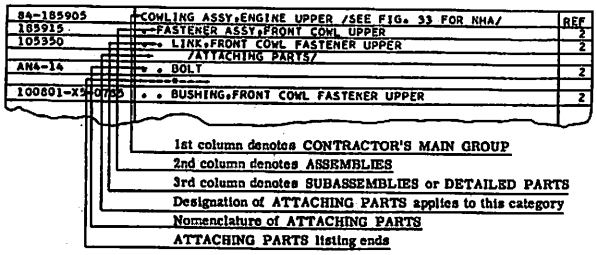

4. SPARE ASSEMBLIES.
Spare assemblies have been included in this breakdown for the purpose of identifying assemblies which are procurable as spares, yet which do not enter into the engineering drawing breakdown sequence by reason of fabrication. For example, a spare outboard wing assembly is procurable complete with electrical equipment, electrical wiring, plumbing, flight controls, etc., all of which are parts of other major installations. Spare assemblies listed in this breakdown are identified by the dash six hundred series of numbers (-600).

5. RELATIONSHIP BETWEEN ILLUSTRATED PARTS BREAKDOWN AND OTHER HANDBOOKS.
Part numbers and nomenclature used in this breakdown are also used in flight, maintenance and repair handbooks of this series. Exploded views show the relationship of parts to their assemblies and to the entire airplane; thus helping to supplement pictorially, descriptions and disassembly and reassembly procedures used in the other handbooks. A further use is for positive identification of the correct attaching parts for assemblies and individual components.

6. SPECIAL ABBREVIATIONS.
The following is a list of standard abbreviations used throughout this publication.

LH	Left Hand
RH	Right Hand
REF.	Reference
INSTL	Installation
ASSY	Assembly
NHA.	Next Higher Assembly
AR	As Required
OUTBD.	Outboard
INBD	Inboard
FIG.	Figure
STA.	Station
FR	From
P/N.	Part Number

7. USABLE ON CODE COLUMN.
Since this breakdown covers the C-45H and TC-45H, a code identifies the model on which each part is used. The code, found in the last column of the parts breakdown, consists of letters assigned to each model, as shown below. Parts which are common to all models are assigned no letter.

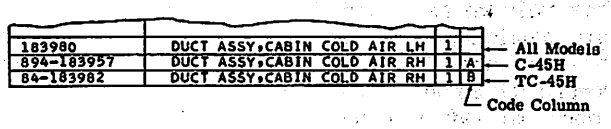

The following chart is provided to show the blocks of USAF Serial numbers assigned to the Model C-45H and TC-45H aircraft, respectively. This chart used in conjunction with the table shown below will provide a proper and expeditious means of determining the exact usage of all coded parts listed in this breakdown.

CODE	USAF SERIAL NUMBER
A	51-11444 thru 51-11503, 51-11600 thru 51-11911 and 52-10539 thru 52-10970
B	51-11504 thru 51-11599

In some cases airplanes will have a different and/or additional parts than those required by other airplanes of the same model. When this occurs, it will be indicated in the Usable on Code column by the applicable model code letter followed by a dash and a number. This code is in turn keyed to the Master Usable on Code table as shown below.

USAGE CODE	USAF SERIAL NUMBER
A-1	51-11444 thru 51-11503 and 51-11600 thru 51-11911
A-2	52-10539 thru 52-10970
A-3	51-11444 thru 51-11503
A-4	51-11444 thru 51-11503 and 51-11600 thru 51-11721
A-5	51-11722 thru 51-11911 and 52-10539 thru 52-10970
A-6	51-11501 thru 51-11503 and 52-10539 thru 52-10970
A-7	51-11444 thru 51-11503 and 51-11600 thru 51-11765
A-8	51-11766 thru 51-11911 and 52-10539 thru 52-10970

USAGE CODE	USAF SERIAL NUMBER (Continued)
A-9	51-11600 thru 51-11732, 51-11744 thru 51-11911 and 52-10539 thru 52-10970
A-10	51-11733 thru 51-11743
A-11	51-11444 thru 51-11450
A-12	51-11451 thru 51-11503, 51-11600 thru 51-11911 and 52-10539 thru 52-10970
A-13	51-11444 thru 51-11503 and 51-11600 thru 51-11741
A-14	51-11742 thru 51-11911 and 52-10539 thru 52-10970
A-15	51-11444 thru 51-11503 and 51-11600 thru 51-11604
A-16	51-11605 thru 51-11911 and 52-10539 thru 52-10970
A-17	52-10539 thru 52-10814
A-18	52-10815 thru 52-10970
A-19	51-11444 thru 51-11503, 51-11600 thru 51-11911 and 52-10539 thru 52-10688
A-20	52-10689 thru 52-10970
A-21	51-11476 thru 51-11503, 51-11600 thru 51-11911 and 52-10539 thru 52-10970
A-22	51-11444 thru 51-11475
A-23	51-11476 thru 51-11503 and 51-11600 thru 51-11604
A-24	51-11677 thru 51-11911 and 52-10539 thru 52-10970
A-25	51-11444 thru 51-11676
A-26	51-11444 thru 51-11503, 51-11600 thru 51-11911 and 52-10539 thru 52-10638
A-27	52-10639 thru 52-10970
A-28	51-11444 thru 51-11503 and 51-11600 thru 51-11893
A-29	51-11894 thru 51-11911 and 52-10539 thru 52-10970
B-1	51-11504 thru 51-11535
B-2	51-11583 thru 51-11599
B-3	51-11593 thru 51-11599
B-4	51-11504 thru 51-11592
B-5	51-11505 thru 51-11599
B-6	51-11504 only
B-7	51-11563 thru 51-11599

8. USE OF FOOTNOTES.
When a part is interchangeable, has a special status, or additional information is necessary, footnotes may be used for clarification. Footnotes are identified by use of an asterisk which will immediately follow the manufacturer's part number in the parts listing.

9. MANUFACTURERS' CODE SYMBOLS.
Manufacturer's codes utilized in this publication are in accordance with The Federal Supply Code for Manufacturers (Cataloging Handbook H 4). The following list contains the five-digit code with the manufacturer's name and address to which the code has been assigned.

MANUFACTURERS' CODE SYMBOLS

CODE	Vendor's Name and Address
00502	Adel Division, General Metals Corporation, Burbank, California
00779	Aircraft Marine Products, Harrisburg, Pennsylvania
01843	American Bosch Corporation, 3700 Main Street, Springfield 7, Massachusetts
01930	American Cabinet Hardware Corporation, 416 South Main Street, Rockford, Illinois
02413	American LaFrance Corporation, 903 Erie Street, Elmira, New York
02660	American Phenolic Corporation, 1830 South 54th Avenue, Chicago, Illinois
02860	American Seating Company, Grand Rapids, Michigan
06840	Bendix Aviation Corporation, Fisher Building, Detroit, Michigan
08484	Breeze Corporation, Inc., 18-38 South 6th Street, Newark 6, New Jersey
12204	Chrysler Corporation, 341 Massachusetts, Detroit, Michigan
13445	Cole-Hersee Company, 18 Old Colony Avenue, Boston, Massachusetts
15605	Cutler-Hammer, Inc., Milwaukee, Wisconsin
19220	Eberhard Manufacturing Company, Cleveland, Ohio
19315	Eclipse-Pioneer, Division Bendix Aviation Corporation, Teterboro, New Jersey
20019	Electric Specialty Company, Stamford, Connecticut
21335	The Fafnir Bearing Company, New Britain, Connecticut
24446	General Electric Company, Schenectady 5, New York
25472	The B. F. Goodrich Company, 448 South Main Street, Akron, Ohio
31435	Jack & Heintz Precision Industries, Inc., 17598 Broadway, Cleveland, Ohio
33116	Kelsey-Hayes Company, 3600 Military Avenue, Detroit, Michigan

MANUFACTURERS' CODE SYMBOLS (Continued)

CODE	Vendor's Name and Address
33525	Walter Kidde & Company, Inc., Belleville 9, New Jersey
35662	The Leland Electric Company, 1501 Leo Street, Dayton, Ohio
35918	Lewis Engineering, Naugatuck, Connecticut
36536	Liquidometer Corporation, 39-20 Skillman Avenue, Long Island, New York
37942	P. R. Mallory & Company, Inc., Indianapolis, Indiana
40228	Micro Switch, Division Minneapolis Honeywell Regulator Company, Freeport, Illinois
44655	Ohmite Manufacturing Company, 4837 Flournoy Street, Chicago 44, Illinois
45681	The Parker Appliance Company, 17325 Euclid Avenue, Cleveland 12, Ohio
51663	Lear-Romec, Division Lear, Inc., 1430 Abbee Road, Elyria, Ohio
53268	Schatz Manufacturing Company, West Poughkeepsie, New York
53655	Scott Aviation Corporation, 1314 Depew Avenue, Lancaster, New York
56232	Sperry Gyroscope Company, Inc., 30 Rockefeller Plaza, New York, New York
56289	Sprague Electric Company, 201 Beaver Street, North Adams, Massachusetts
57733	Stewart Warner Corporation, 1850 Diversey Parkway, Chicago, Illinois
59875	Thompson Products, Inc., 23555 Euclid Avenue, Cleveland, Ohio
60380	The Torrington Company, 1000 Clark Street, Torrington, Connecticut
61463	U. S. Rubber Company, 1232 Avenue of the Americas, New York 20, New York
61864	United Carr Fastener Corporation, 450 Main Street, Cambridge 42, Massachusetts
66295	Wittek Manufacturing Company, 4309 West 24th Place, Chicago, Illinois
66821	Yale & Towne Manufacturing Company, 200 Henry Street, Stamford, Connecticut
70138	Aero Supply Manufacturing Company, Inc., Main at 5th, Corry, Pennsylvania
70276	Allen Manufacturing Company, Hartford, Connecticut
70843	Ball Brothers Company, Ryan & Burt Streets, Muncie, Indiana
70903	Belden Manufacturing Company, 4647 West Van Buren, Chicago, Illinois
71041	Boston Gear Works, Division of Murray Company of Texas, Quincy, Massachusetts
71468	Cannon Electric Company, Humbolt at Avenue 33, Los Angeles 31, California
71568	Colonial Bronze Company, Torrington, Connecticut
71688	Cook Electric Company, 2710 North Southport Avenue, Chicago 14, Illinois
71694	P. & F. Corbin & Company, Division American Hardware Corporation, New Britain, Connecticut
71863	Dayton Manufacturing Company, Dayton, Ohio
72019	Dura Plastics, Inc., 327 East 29th Street, New York, New York
72343	C. Cowles & Company, New Haven, Connecticut
72625	Diamond Chain Company, Inc., 404 Kentucky Avenue, Indianapolis 7, Indiana
72794	Dzus Fastener Company, Inc., John Street, Babylon, New York
72819	Globar, Division Carborundum Company, Niagara Falls, New York
72882	Grand Rapids Metalcraft, Division F. L. Jacobs Company, Grand Rapids, Michigan
72914	Grimes Manufacturing Company, 600 North Russell, Urbana, Ohio
72962	Elastic Stop Nut Corporation of America, 2330 Vauxhall Road, Union, New Jersey
73030	Hamilton Standard Propeller, Division United Aircraft Corporation, East Hartford, Connecticut
73134	The Heim Company, Fairfield, Connecticut
73439	American Screw Company, Willimantic, Connecticut
73559	Carling Electric, Inc., 630 Capitol Avenue, Hartford, Connecticut
73760	General Controls Company, 801 Allen Avenue, Glendale, California
73842	Goodyear Tire & Rubber Company, Inc., 1220 Massillon Road, Akron, Ohio
74063	Hartman Electrical Manufacturing Company, Mansfield, Ohio
74080	Hayes Industries, Inc., Wildwood Road, Jackson, Michigan
74465	Hoof Products Company, 6543 South Laramie Avenue, Chicago, Illinois
74887	Insuline Corporation of America, Insuline Building 35th Avenue & 36th Street, Long Island, N.Y.
75052	Inter-Costal Pain Corporation, East St. Louis, Illinois
75173	Howard B. Jones, Division Clinch Manufacturing Corporation, Chicago, Illinois

MANUFACTURERS' CODE SYMBOLS (Continued)

CODE	Vendor's Name and Address
75361	Koehler Aircraft Products Company, 815 Vermont Avenue, Dayton 4, Ohio
75511	Lamb Electric Company, Inc., Kent, Ohio
75915	Littelfuse, Inc., 4765 North Ravenswood Avenue, Chicago, Illinois
76005	Lord Manufacturing Company, 1639 West 12th Street, Erie, Pennsylvania
76623	National Brass Company, 1599 Madison, Grand Rapids 2, Michigan
77379	The Premier Rubber Manufacturing Company, Dayton, Ohio
77445	Pratt & Whitney Aircraft Corporation, East Hartford, Connecticut
77545	Reed & Prince Manufacturing Company, 100 Duncan Avenue, Worchester, Massachusetts
77636	Radio Laboratory, Inc., Kansas City, Missouri
77902	Rohm & Hass, Philadelphia, Pennsylvania
77969	Rubbercraft Corporation of California, Ltd., 127 East 17th Street, Los Angeles, California
78043	Spencer Thermostat, Division Metals & Controls Corporation, Attleboro, Massachusetts
78216	Shelby Spring Hinge Company, 1941 Malone Street, Shelby, Ohio
78290	Struthers-Dunn, Inc., 150 North 13th Street, Philadelphia 7, Pennsylvania
78553	Tinnerman Products, Inc., 8900 Brookpark Road, Cleveland 29, Ohio
78570	Titeflex, Inc., 502 Frelinghuysen Avenue, Newark, New Jersey
78655	Surprenant Manufacturing Company, Webster & Atlas Bank Building, Boston, Massachusetts
78947	The Ucinite Company, 1 Nevada Street, Newtonville, Massachusetts
79318	Wm. R. Whittaker, Ltd., Los Angeles 38, California
80044	Wright Aeronautical Corporation, Patterson, New Jersey
80063	Signal Corps, U. S. Army
80097	American Chain & Cable Company, General Motors Building, Detroit 2, Michigan
80112	Walter L. Schott Company, Beverly Hills, California
80251	The Formica Company, 4615 Spring Grove Avenue, Cincinnati 32, Ohio
80896	Professional Equipment Company, Chicago, Illinois
81685	Kansas City Trimming Supply Company, Kansas City, Missouri
81866	Wickland Manufacturing Company, 62 South Arroyo Seco Parkway, Pasadena, California
81910	Eaton Manufacturing Company, 9771 French Road, Detroit 13, Michigan
82355	Gerity-Michigan Corporation, Adrian, Michigan
82710	United Screw & Bolt Corporation, 2513 West Cullerton Street, Chicago 8, Illinois
83028	Sealright Company, Inc., Fulton, New York
83044	Dayton Aircraft Products, Dayton, Ohio
88692	Ford Motor Company, Detroit, Michigan
91265	Goshen Rubber Company, Inc., Goshen, Indiana
92003	Parker Aircraft, Los Angeles, California
93575	Eclipse Aviation, Division Bendix Aviation Corporation, Teterboro, New Jersey
93907	Camcar, Division of Textron, Inc., Rockford, Illinois
95764	Electronic Communications, Inc., Chicago, Illinois
99246	Ram Meter, Inc., Ferndale 20, Michigan

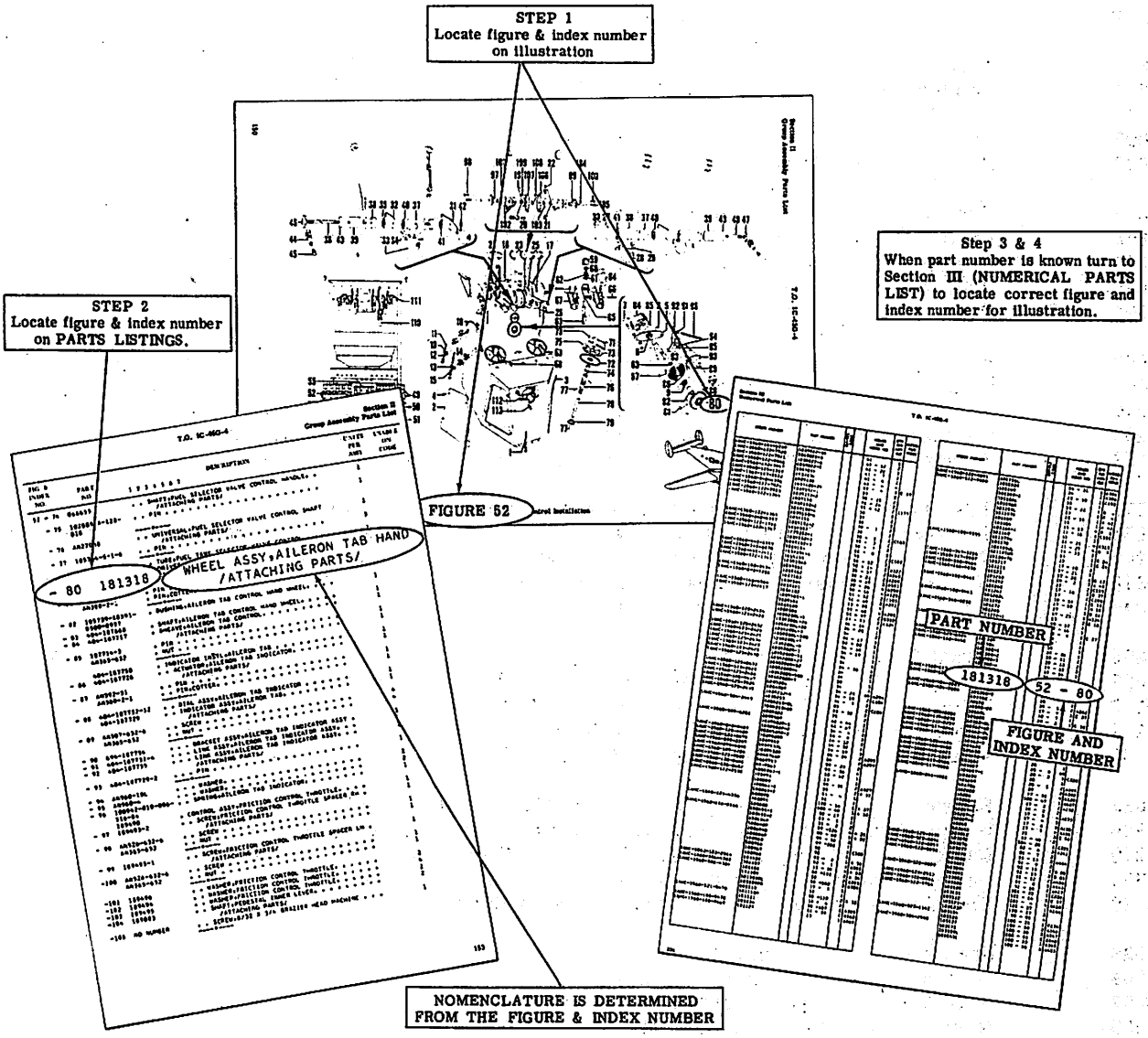

IDENTIFICATION OF PARTS

A. LOCATION OF PART NUMBER.

1. To find a part when the description is known and the number is not consult the Group Assembly Parts List pages applicable to the particular section of the airplane, and from the illustration determine the figure and index number of the part in question.

2. Figure and index numbers are listed in consecutive order in the columns on the left hand side of the Group Assembly Parts List page. When the figure and index number is located, the correct part number and nomenclature can be determined from the Part Number and Nomenclature columns. This method is illustrated and shown step by step in the illustration above.

B. LOCATION OF PART DESCRIPTION.

1. To find a part when only the part number is known, refer to the Numerical Parts List (Section III).

2. Opposite each part is the figure and index number where the part is first shown in the Illustration of the Group Assembly Parts List. From the Group Assembly Parts List the correct nomenclature can then be determined.

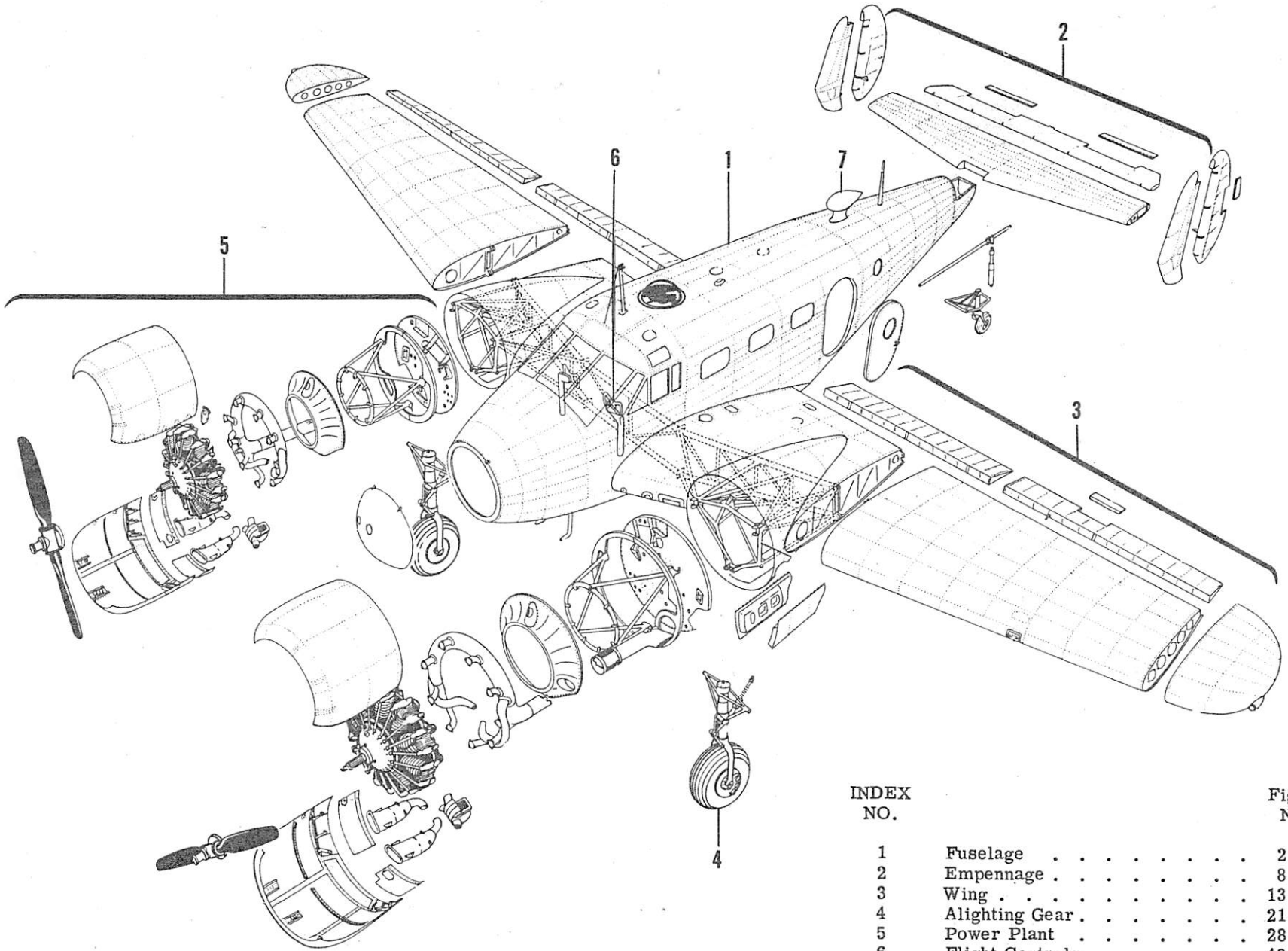

INDEX NO.		Figure No.
1	Fuselage	2- 7
2	Empennage	8- 12
3	Wing	13- 20
4	Alighting Gear	21- 27
5	Power Plant	28- 48
6	Flight Controls	49- 61
7	Furnishings	62-106

Figure 1. General Arrangement of Complete Aircraft

C45H-4-1

SECTION II

GROUP ASSEMBLY PARTS LIST

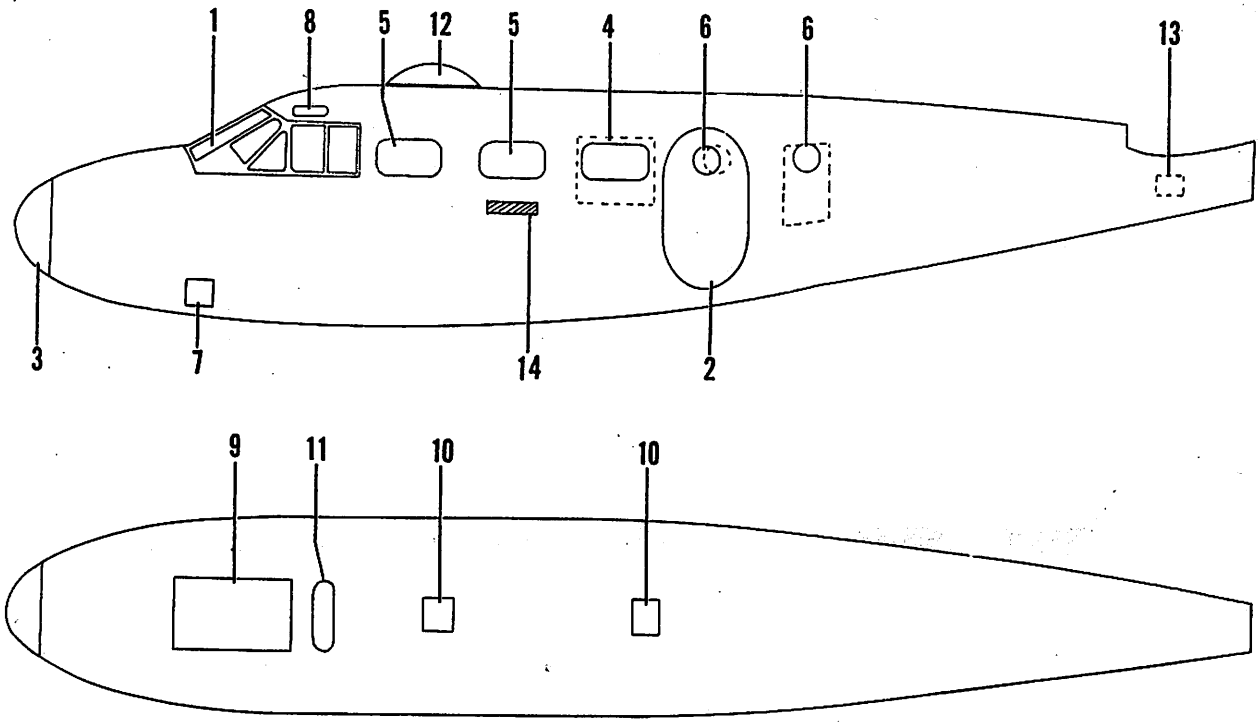

Figure 2. Fuselage Structure Assembly

C45H-4-2

FIG. & INDEX NO.	PART NO.	DESCRIPTION 1 2 3 4 5 6 7	UNITS PER ASSY	USABLE ON CODE
2	694-184000	STRUCTURE ASSY,FUSELAGE /SEE FIG. 1 FOR NHA/	1	A-1
	694-184001	STRUCTURE ASSY,FUSELAGE	1	B
	694-184000-14	STRUCTURE ASSY,FUSELAGE	1	A-2
- 1	894-185500	. WINDSHIELD & PILOTS WINDOW INSTL /SEE FIG. 3/	1	A-1,B
	894-185500-2	. WINDSHIELD & PILOTS WINDOW INSTL /SEE FIG. 3/	1	A-2
- 2	18560-600	. DOOR ASSY,CABIN /SEE FIG. 4/	1	
	694-180360	. RELEASE INSTL,CABIN DOOR EMERGENCY /SEE FIG. 4/	1	
- 3	18526-610	. DOOR ASSY,NOSE BAGGAGE /SEE FIG. 5/	1	
- 4	694-185650	. HATCH ASSY,EMERGENCY EXIT /SEE FIG. 6/	1	
	694-184452	. FRAME INSTL,FUSELAGE EMERGENCY EXIT /SEE FIG. 6/	1	
	404-184455-2	. WINDOW INSTL,CABIN	5	A
	404-184455-24	. WINDOW INSTL,CABIN	5	B
- 5	404-184459	. . GLASS,CABIN WINDOW	1	A
	404-184459-2	. . GLASS,CABIN WINDOW	1	B
	407-184450	. PORTHOLE INSTL,FUSELAGE	3	A
	644-184450	. PORTHOLE INSTL,FUSELAGE	3	B
- 6	404-184458	. . GLASS,CABIN PORTHOLE	1	
	814-184020	. DOOR INSTL,RUDDER PEDAL INSPECTION LH	1	
	814-184020-1	. DOOR INSTL,RUDDER PEDAL INSPECTION RH	1	
- 7	814-184022	. . DOOR ASSY,RUDDER PEDAL INSPECTION LH	1	
	814-184022-1	. . DOOR ASSY,RUDDER PEDAL INSPECTION RH	1	
	184470	. WINDOW INSTL,PILOTS UPPER LH	1	
	184470-4	. WINDOW INSTL,PILOTS UPPER RH	1	

FIG. & INDEX NO.	PART NO.	DESCRIPTION 1 2 3 4 5 6 7	UNITS PER ASSY	USABLE ON CODE
2 - 8	404-185520	. . WINDOW,PILOTS UPPER LH.	1	
	404-185520-1	. . WINDOW,PILOTS UPPER RH.	1	
	694-184660	. DOOR INSTL,BELLY STRUCTURE & INSPECTION . . .	1	
- 9	184690	. . DOOR ASSY,BELLY INSPECTION.	1	
	404-184071-8	. DOOR INSTL,PULLEY ACCESS.	1	
	404-184071-10	. DOOR INSTL,PULLEY ACCESS.	1	
- 10	404-184071-2	. . DOOR,PULLEY ACCESS.	1	
	404-184071-4	. . DOOR,PULLEY ACCESS. . . . . /ATTACHING PARTS/	1	
	AN526-832R5	. . SCREW	12	
		----*----		
	894-184054	. DOOR INSTL,CONTROL CABLE ACCESS	1	
- 11	894-184054-4	. . DOOR,CONTROL CABLE INSPECTION . . . . . /ATTACHING PARTS/	1	
	AN526-832-9	. . SCREW	8	
		----*----		
- 12	209-0000	. ASTRODOME ASSY,/SEE FIG. 7/	1	B
	18471	. DOOR INSTL,TAIL SHOCK INSPECTION.	1	
	18471-14	. DOOR INSTL,TAIL SHOCK INSPECTION.	1	A-3,B-1
- 13	18471-15	. . DOOR ASSY,TAIL SHOCK INSPECTION	1	
	18471-16	. . DOOR ASSY,TAIL SHOCK INSPECTION . . . . . /ATTACHING PARTS/	1	A-3,B-1
	105774-C-090-00412	. . PIN,HINGE	1	
		----*----		
- 14	50-000085	PLACARD,CUT HERE FOR EMERGENCY RESCUE	2	

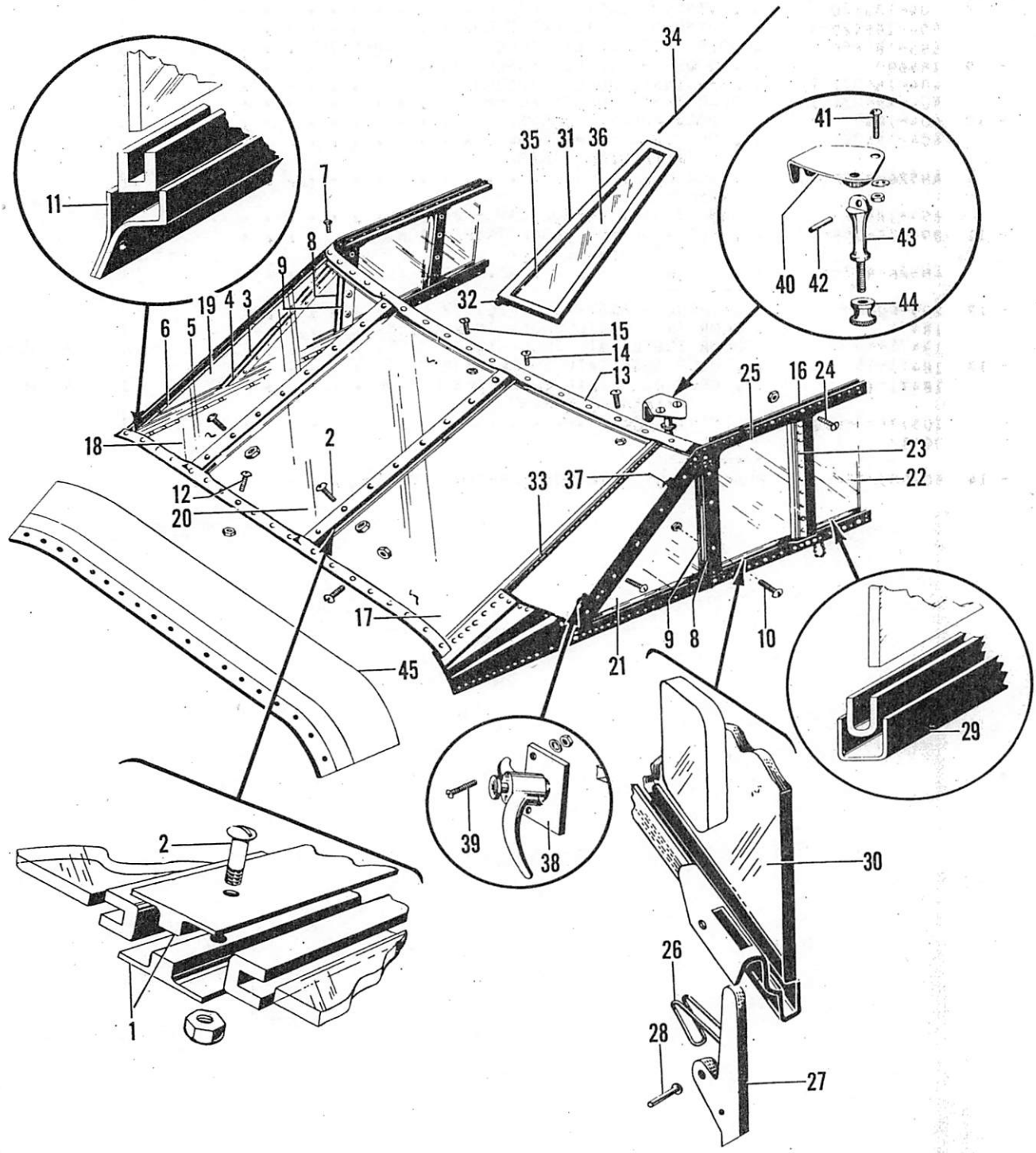

Figure 3. Windshield and Pilot's Window Installation

C45H-4-3

FIG. & INDEX NO.	PART NO.	DESCRIPTION 1 2 3 4 5 6 7	UNITS PER ASSY	USABLE ON CODE
3	894-185500	WINDOW INSTL,WINDSHIELD & PILOTS. /SEE FIG. 2 FOR NHA/	1	A-1,B
	894-185500-2	WINDOW INSTL,WINDSHIELD & PILOTS. /SEE FIG. 2 FOR NHA/	1	A-2
- 1	18550-3	. FRAME,CENTER. /ATTACHING PARTS/	4	
- 2	AN526-632-12	. SCREW	7	
	AN365-632	. NUT	7	
		----*----		
- 3	18550-4	. FRAME,WINDOW OUTER.	1	
- 4	18550-5	. FRAME,WINDOW INNER.	1	
- 5	18550-35	. TEE,WINDOW OUTER /MAKE FR 101637-028-08/.	1	
- 6	18550-36	. TEE,WINDOW INNER /MAKE FR 101637-028-08/. /ATTACHING PARTS/	1	
- 7	AN526-632-12	. SCREW	7	
	AN365-632	. NUT	7	
		----*----		
- 8	18550-6L	. FRAME,PILOTS WINDOW OUTER LH.	1	
	18550-6R	. FRAME,PILOTS WINDOW OUTER RH.	1	
- 9	18550-7L	. FRAME,PILOTS WINDOW INNER LH.	1	
	18550-7R	. FRAME,PILOTS WINDOW INNER RH. /ATTACHING PARTS/	1	
- 10	AN526-632-12	. SCREW	5	
	AN365-632	. NUT	5	
		----*----		
- 11	18550-20	. STRIP,CAP /ATTACHING PARTS/	1	
- 12	AN526-632-7	. SCREW	17	
	AN365-632	. NUT	17	
		----*----		
- 13	18550-21	. STRIP,CAP /ATTACHING PARTS/	1	
- 14	AN526-632-8	. SCREW	5	
- 15	AN526-632-7	. SCREW	14	
	AN365-632	. NUT	19	
		----*----		
- 16	185501	. STRIP,PILOTS & COPILOTS WINDOW.	4	
- 17	18551-2L	. GLASS,WINDSHIELD LH	1	
- 18	18551-2R	. GLASS,WINDSHIELD RH	1	
- 19	18551-4R	. GLASS,WINDSHIELD RH	1	
- 20	18552-1	. GLASS,WINDSHIELD CENTER	1	
- 21	18552-2	. GLASS,SIDE.	2	
- 22	18552-4	. GLASS,REAR SIDE	2	
- 23	404-185560	. WEATHERSTRIP ASSY,PILOTS & COPILOTS WINDOW. /ATTACHING PARTS/	2	
- 24	AN526-632-6	. SCREW	2	
	AN365-632	. NUT	2	
		----*----		
- 25	404-185507	. WINDOW ASSY,PILOTS SLIDING LH	1	
	404-185507-1	. WINDOW ASSY,COPILOTS SLIDING RH	1	
- 26	404-185508	. . SPRING,PILOTS SLIDING WINDOW LATCH.	1	
- 27	404-185509	. . LEVER,PILOTS SLIDING WINDOW LATCH RELEASE	1	
- 28	102809-062-012	. . PIN	1	
- 29	404-185511	. . CHANNEL,PILOTS SLIDING WINDOW LH.	1	
	404-185511-1	. . CHANNEL,COPILOTS SLIDING WINDOW RH.	1	
- 30	404-185512	. . GLASS ASSY,PILOTS SLIDING WINDOW.	1	
	185530	. WINDOW INSTL,STORM LH	1	
	185530-24	. . WINDOW ASSY,STORM	1	
- 31	185531L	. . . FRAME ASSY,STORM WINDOW	1	
- 32	185530-18	. . . HINGE,HALF.	1	
- 33	185530-22	. . . HINGE,HALF.	1	
- 34	105774-C-063-02008	. . . PIN,HINGE	1	
- 35	185530-7	. . . FILLER,STORM WINDOW FRAME	1	
- 36	18551-3L	. . . GLASS,STORM LH.	1	

FIG. & INDEX NO.	PART NO.	DESCRIPTION 1 2 3 4 5 6 7	UNITS PER ASSY	USABLE ON CODE
3 - 37	185536	. . LATCH,STORM WINDOW UPPER.	1	
- 38	185532	. . LATCH,STORM WINDOW LOWER.	1	
		/ATTACHING PARTS/		
- 39	AN526-632-12	. . SCREW	2	
	AN960-6	. . WASHER.	2	
	AN365-632	. . NUT	2	
		----*----		
	437-183038	. CATCH INSTL,STORM WINDOW.	1	
- 40	185543	. . BRACKET,CATCH ASSY MOUNTING	1	
		/ATTACHING PARTS/		
- 41	AN526-632R7	. . SCREW	2	
	AN960-6	. . WASHER.	2	
	AN365-632	. . NUT	2	
		----*----		
- 42	102809-A125-020	. . PIN	1	
- 43	185545	. . BOLT,STORM GLASS UPPER CATCH EYE.	1	
- 44	185544	. . KNOB.	1	
- 45	894-185501	. COWL ASSY,WINDSHIELD.	1	A-1,B
	894-185501-18	. COWL ASSY,WINDSHIELD.	1	A-2

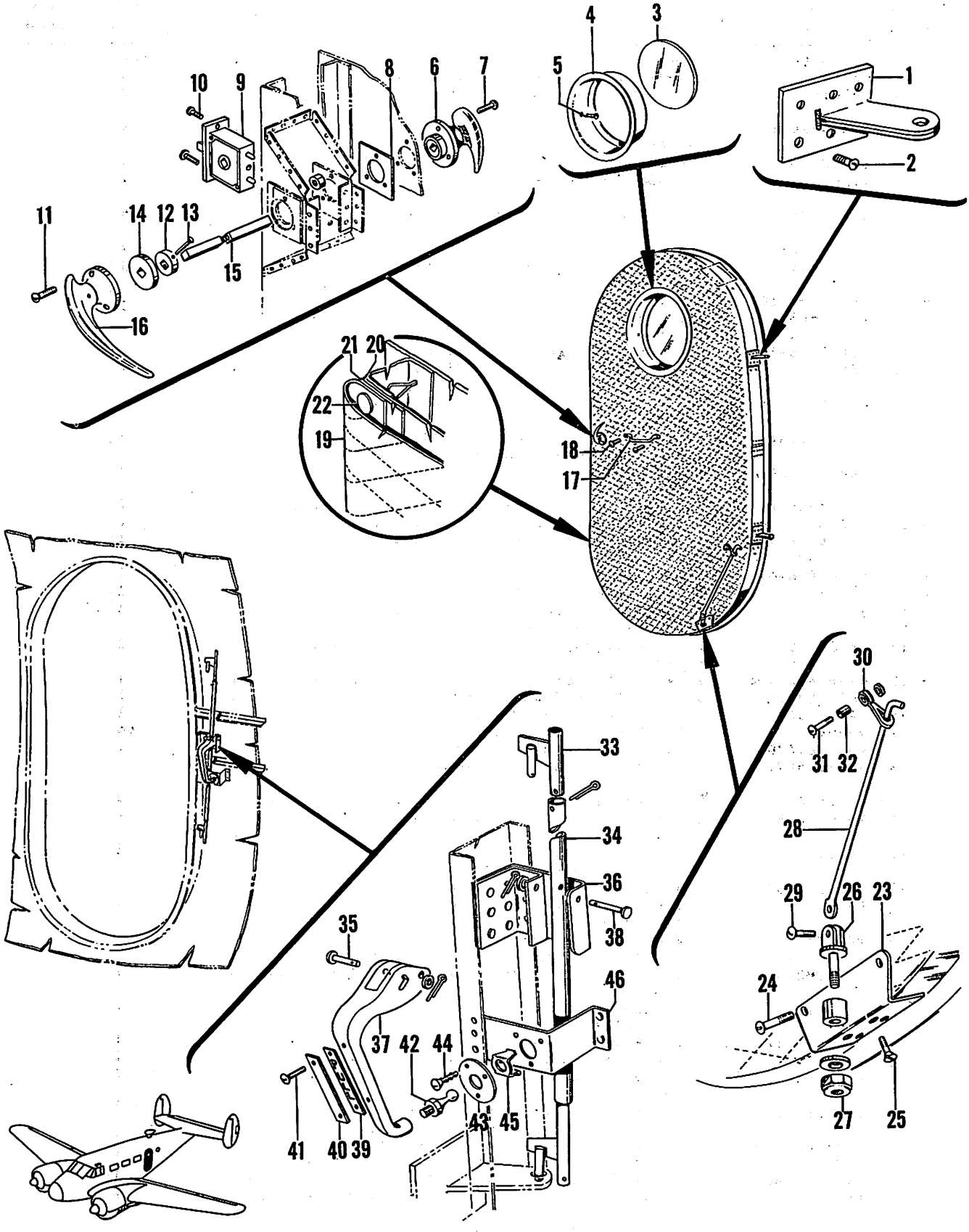

Figure 4. Cabin Door Installation

C45N-4-4

FIG. & INDEX NO.	PART NO.	DESCRIPTION 1 2 3 4 5 6 7	UNITS PER ASSY	USABLE ON CODE
4	18560-600	DOOR ASSY,CABIN /SEE FIG. 2 FOR NHA/	REF	
	18560	. DOOR ASSY,CABIN	1	
- 1	18561-1	. . HINGE ASSY,CABIN DOOR /ATTACHING PARTS/	2	
- 2	AN510-10-8	. . SCREW	6	
		----*----		
- 3	18552-10	. . GLASS,CABIN DOOR.	1	
- 4	185601	. . MOLDING,CABIN DOOR PORTHOLE /ATTACHING PARTS/	1	
- 5	NO NUMBER	. . SCREW,8/32 X 7/16 OVAL HEAD MACHINE	4	
		----*----		
	814-185630	. . LOCK INSTL,CABIN DOOR	1	
- 6	814-185639	. . . HANDLE,CABIN DOOR LOCKING /ATTACHING PARTS/	1	
- 7	SK83-6-7/16	. . . SCREW,/73439/	3	
	AN365-632	. . . NUT	3	
		----*----		
- 8	814-185635	. . . SPACER,CABIN DOOR LOCK OUTER.	1	
- 9	185633	. . . LOCK ASSY,CABIN DOOR. /ATTACHING PARTS/	1	
- 10	AN505-8-8	. . . SCREW	2	
		----*----		
	814-185642	. . . HANDLE ASSY,CABIN DOOR. /ATTACHING PARTS/	1	
- 11	SK83-6-3/4	. . . SCREW,/73439/	3	
		----*----		
- 12	814-185636	. . . . COLLAR,CABIN DOOR HANDLE.	1	
- 13	102809-125-030	. . . . PIN	2	
- 14	100951-R-187-012-108	. . . . WASHER.	1	
- 15	814-185640	. . . . SHAFT ASSY,CABIN DOOR HANDLE.	1	
- 16	Y-127	. . . . HANDLE,CABIN DOOR /71863/	1	
- 17	6143	. . HANDLE,CABIN DOOR /78216/ /ATTACHING PARTS/	1	
- 18	18560-10	. . SCREW,/MAKE FR AN526-1032R10/	2	
		----*----		
- 19	694-183000-6	. PANEL,UPHOLSTERY.	1	
- 20	900-183025	. PANEL,CABIN DOOR INSIDE UPHOLSTERY.	1	
- 21	94-183027	. RING,CABIN DOOR UPHOLSTERY.	1	
- 22	99209	. FASTENER.	86	
	404-185670	. HOLDER INSTL,CABIN DOOR	1	
- 23	404-185671	. . FITTING,CABIN DOOR HOLDER /ATTACHING PARTS/	1	
- 24	AN526-8R9	. . SCREW	2	
- 25	AN507-8R8	. . SCREW	4	
		----*----		
- 26	185674	. . LUG,CABIN DOOR HOLDER /ATTACHING PARTS/	1	
- 27	AN365-1032	. . NUT	1	
	AN960-10	. . WASHER.	1	
		----*----		
- 28	185675	. . ROD,CABIN DOOR STAY /ATTACHING PARTS/	1	
- 29	NO NUMBER	. . SCREW,3/16 X 3/8 BINDING HEAD TYPE /82710/.	1	
		----*----		
- 30	185681	. . LOOP ASSY,CABIN DOOR HOLDER /ATTACHING PARTS/	1	
- 31	AN526-8-12	. . SCREW	1	
- 32	185682	. . BUSHING,CABIN DOOR HOLDER	1	
	AN960-8	. . WASHER.	1	
		----*----		
	694-180360	RELEASE INSTL,CABIN DOOR EMERGENCY. /SEE FIG. 2 FOR NHA/	REF	
	694-180360-1	. RELEASE ASSY,CABIN DOOR EMERGENCY	1	
- 33	I180361-4	. . PIN ASSY,CABIN DOOR RELEASE	1	
- 34	894-180366	. . SHAFT ASSY,CABIN DOOR RELEASE	1	
	AN380-3-3	. . PIN,COTTER.	1	

FIG. & INDEX NO.	PART NO.	DESCRIPTION 1 2 3 4 5 6 7	UNITS PER ASSY	USABLE ON CODE
4	694-180364	. . RELEASE ASSY,CABIN DOOR LEVER . . . . . /ATTACHING PARTS/	1	
- 35	AN393-25	. . PIN	1	
	AN960-10L	. . WASHER.	1	
	AN380-2-1	. . . PIN,COTTER.	1	
		----*----		
- 36	694-180362	. . . BRACKET ASSY,CABIN DOOR EMERGENCY RELEASE	1	
- 37	694-180361	. . . HANDLE,CABIN DOOR EMERGENCY RELEASE . . . /ATTACHING PARTS/	1	
- 38	AN393-31	. . . PIN	1	
	AN960D10L	. . . WASHER.	1	
	AN380-2-1	. . . PIN,COTTER.	1	
		----*----		
- 39	694-180070	. . . PLACARD,CABIN DOOR EMERGENCY RELEASE. . .	1	
- 40	694-180369	. . . COVER,EMERGENCY RELEASE PLACARD . . . . . /ATTACHING PARTS/	1	
- 41	AN535-2-4	. . . SCREW	2	
		----*----		
- 42	9724B	. . . STRIKE,/01930/.	1	
- 43	694-180370	. PLATE,EMERGENCY RELEASE LATCH COVER . . . . . /ATTACHING PARTS/	1	
- 44	NAS384-4-6	. SCREW	3	
		----*----		
	694-180367	. BRACKET ASSY,EMERGENCY RELEASE HANDLE LATCH .	1	
- 45	9724	. . CATCH,/01930/	3	
- 46	694-180367-2	. . BRACKET,EMERGENCY RELEASE HANDLE LATCH. . .	3	

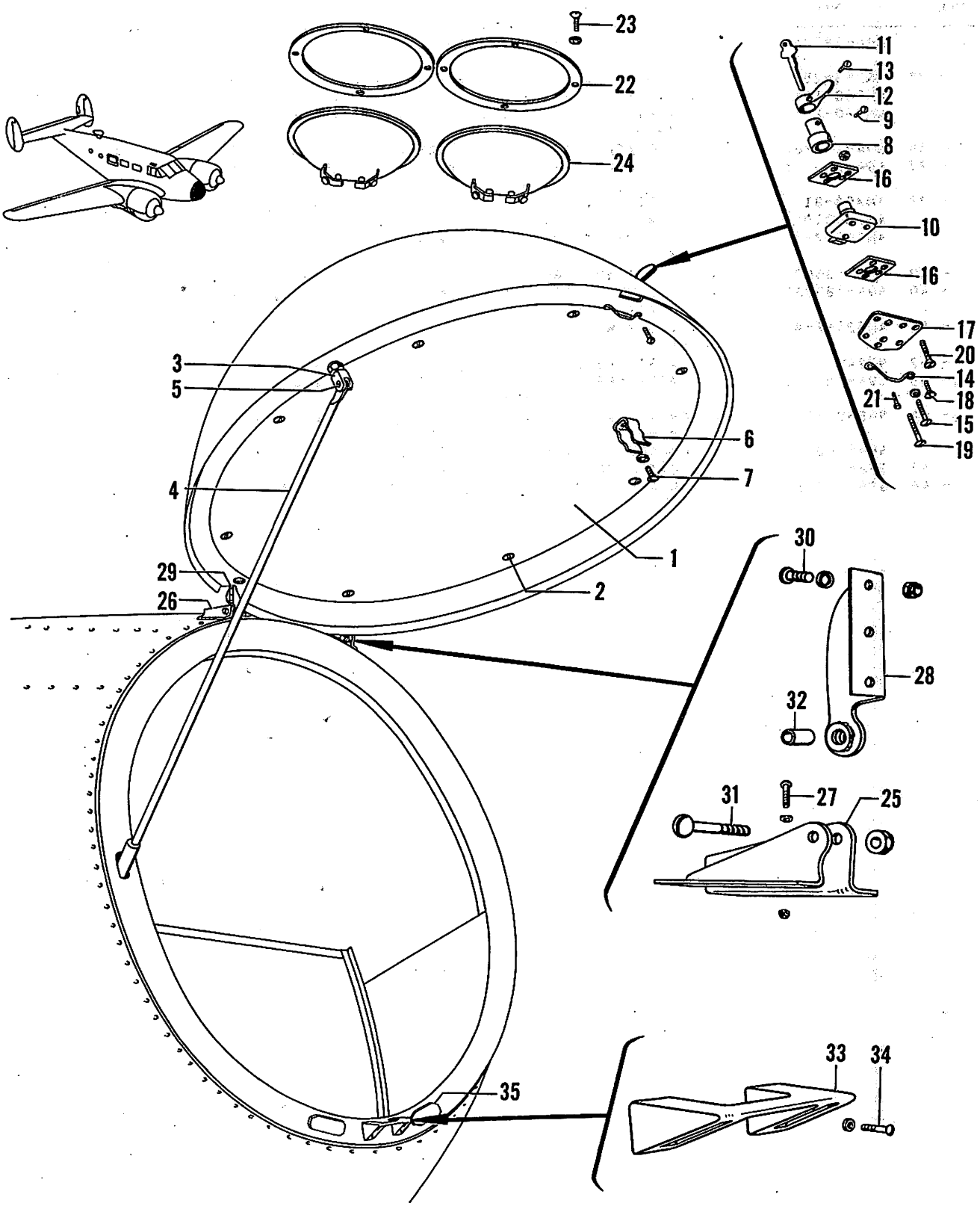

Figure 5. Nose Baggage Door Assembly

C45H-4-5

FIG. & INDEX NO.	PART NO.	DESCRIPTION 1 2 3 4 5 6 7	UNITS PER ASSY	USABLE ON CODE
5	18526-610	DOOR ASSY,NOSE BAGGAGE /SEE FIG. 2 FOR NHA/	REF	
	18526-611	. DOOR ASSY,NOSE BAGGAGE	1	
- 1	18526-3	. . PLATE	1	
		/ATTACHING PARTS/		
- 2	AN515-8-6	. . SCREW	7	
		----*----		
- 3	18526-19	. . FORK ASSY,NOSE DOOR STAY	1	
- 4	185262	. . ROD ASSY,NOSE DOOR STAY	1	
		/ATTACHING PARTS/		
- 5	AN520-10-8	. . SCREW	1	
	AN365-1032	. . NUT	2	
		----*----		
- 6	185678	. . CLIP,NOSE DOOR STAY ROD	1	
		/ATTACHING PARTS/		
- 7	AN515-3-3	. . SCREW	1	
	AN960-3	. . WASHER	1	
	AN340-3	. . NUT	1	
		----*----		
	185270	. LOCK ASSY,NOSE BAGGAGE DOOR	1	
	404-185270-602	. . LOCK ASSY,NOSE BAGGAGE DOOR	1	
	404-185270	. . . LOCK ASSY,NOSE BAGGAGE DOOR	1	
- 8	404-185271	. . . . ADAPTER,BAGGAGE COMPARTMENT DOOR LOCK	1	
		/ATTACHING PARTS/		
- 9	AN515-6R3	. . . . SCREW	1	
		----*----		
- 10	2423X1/4AZ10	. . . . LOCK,/66821/	1	
- 11	404-185270-2	. . . . KEY	2	
- 12	185261	. . . . HANDLE,NOSE BAGGAGE COMPARTMENT DOOR	1	
		/ATTACHING PARTS/		
- 13	AN515-3R3	. . . . SCREW	1	
		----*----		
- 14	18528-3	. . . HOOK,NOSE BAGGAGE DOOR STRAP	1	
		/ATTACHING PARTS/		
- 15	AN526-632-9	. . . SCREW	2	
	AN960-6	. . . WASHER	4	
	AN365-632	. . . NUT	2	
		----*----		
- 16	185272-2	. . . PLATE,DOOR LOCK	2	
- 17	185273	. . . PLATE,DOOR LOCK	1	
		/ATTACHING PARTS/		
- 18	AN505-8-18	. . . SCREW	2	
	AN365-832	. . . NUT	5	
- 19	AN526-8-18	. . . SCREW	1	
- 20	AN505-6-8	. . . SCREW	2	
- 21	AN526-8-8	. . . SCREW	1	
		----*----		
	694-180546	. LIGHT INSTL,NOSE TAXI	1	
- 22	694-180548	. . RING ASSY,TAXI LIGHT RETAINING	2	
		/ATTACHING PARTS/		
- 23	AN515-8-8	. . SCREW	8	
	AN960-8	. . WASHER	8	
		----*----		
- 24	4570	. . LAMP,/24446/	2	
- 25	185267L	. HINGE ASSY,NOSE BAGGAGE DOOR	1	
- 26	185267R	. HINGE ASSY,NOSE BAGGAGE DOOR	1	
		/ATTACHING PARTS/		
- 27	AN526-6-8	. SCREW	12	
	AN960-6	. WASHER	12	
	AN365-632	. NUT	12	
		----*----		
- 28	185268L	. HINGE ASSY,NOSE BAGGAGE DOOR	1	
- 29	185268R	. HINGE ASSY,NOSE BAGGAGE DOOR	1	
		/ATTACHING PARTS/		
- 30	AN526-6-7	. SCREW	6	
	AN960-6	. WASHER	6	
	AN365-632	. NUT	6	
		----*----		

FIG. & INDEX NO.	PART NO.	DESCRIPTION 1 2 3 4 5 6 7	UNITS PER ASSY	USABLE ON CODE
5 - 31	185269	• BOLT,NOSE BAGGAGE DOOR HINGE• • • • • • • • •	2	
- 32	18526-9	• BUSHING,BAGGAGE DOOR HINGE• • • • • • • • •	2	
	AN364-1032	• NUT •	2	
- 33	185274	• BLOCK,LOCK STRIKER• • • • • • • • • • • • •	1	
		/ATTACHING PARTS/		
- 34	AN515-6-10	• SCREW •	2	
	AN960-6	• WASHER• • • • • • • • • • • • • • • • • • • •	2	
		----*----		
- 35	185272	• STOP,BAGGAGE DOOR • • • • • • • • • • • • • •	2	

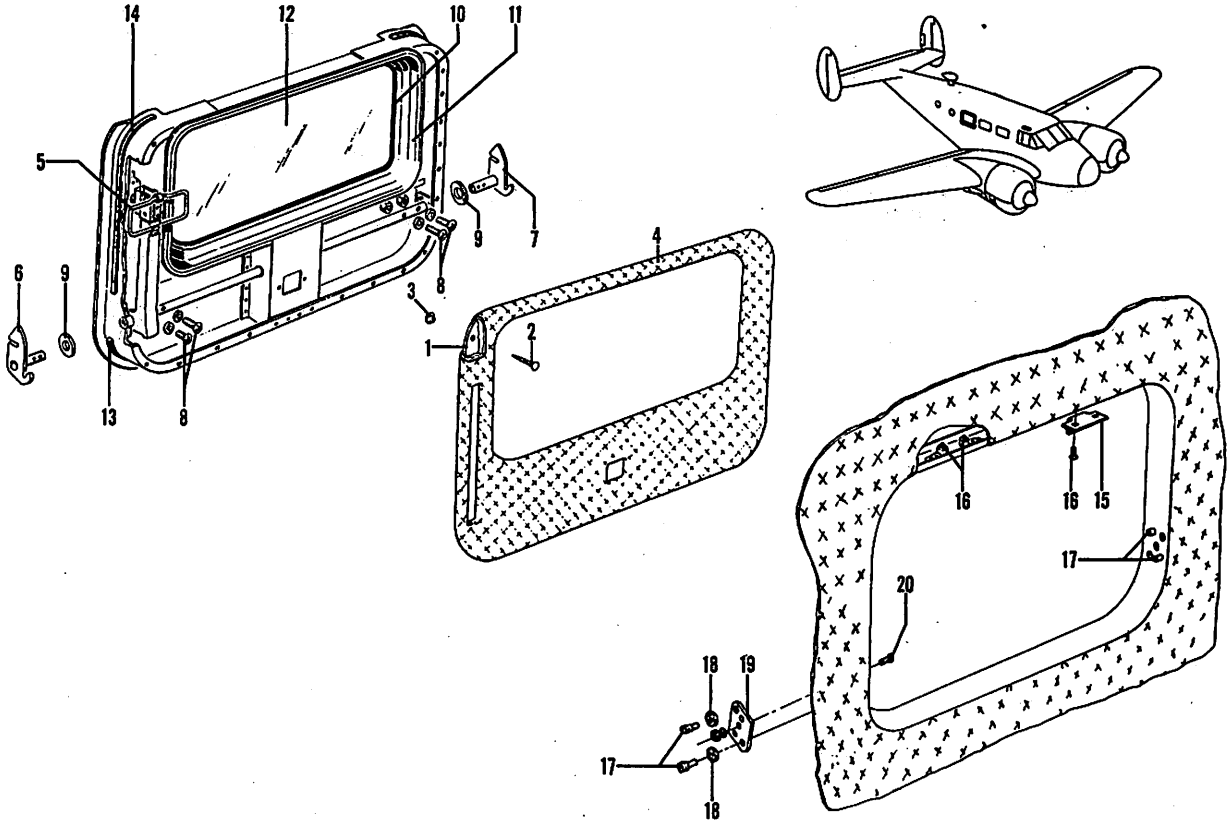

Figure 6. Emergency Exit Hatch Assembly

C45H-4-6

FIG. & INDEX NO.	PART NO.	DESCRIPTION 1 2 3 4 5 6 7	UNITS PER ASSY	USABLE ON CODE
6	694-185650-611	HATCH ASSY,EMERGENCY EXIT /SEE FIG. 2 FOR NHA/.	REF	
- 1	404-183019	. PANEL ASSY,EMERGENCY EXIT UPHOLSTERY. . . . . /ATTACHING PARTS/	1	
- 2	8	. NAIL,TRIMOUNT /61864/	21	
- 3	21	. STUD,TRIMOUNT /61864/	21	
		-----*-----		
- 4	694-183000-14	. PANEL,UPHOLSTERY.	1	
	694-185650	. HATCH ASSY,EMERGENCY EXIT	1	
	694-185650-40	. . HANDLE & CAM ASSY,EMERGENCY EXIT.	1	
- 5	694-185653	. . . LEVER ASSY,EMERGENCY EXIT RELEASE	1	
- 6	694-184456	. . . CAM ASSY,EMERGENCY EXIT LOCK LH	1	
- 7	694-184456-1	. . . CAM ASSY,EMERGENCY EXIT LOCK RH . . . . . /ATTACHING PARTS/	1	
- 8	NAS221-19	. . . SCREW	2	
	AN960-10	. . . WASHER.	2	
	AN365-1032	. . . NUT	2	
		-----*-----		
- 9	100951-X-031-023-100	. . . WASHER.	2	
	404-184455-4	. . WINDOW INSTL,EMERGENCY EXIT	1	
- 10	404-184455-16	. . . SEAL,WINDOW /MAKE FR /25472/ 992/	1	
- 11	404-184455-18	. . . MOLDING	2	
- 12	404-184459	. . . GLASS,WINDOW.	1	
- 13	694-185650-36	. . SEAL,EMERGENCY EXIT HATCH	1	
- 14	694-185650-38	. . SEAL,EMERGENCY EXIT HATCH	1	

FIG. & INDEX NO.	PART NO.	DESCRIPTION 1 2 3 4 5 6 7	UNITS PER ASSY	USABLE ON CODE
6	694-184452	FRAME INSTL,FUSELAGE EMERGENCY EXIT . . . . . /SEE FIG. 2 FOR NHA/	REF	
- 15	404-184452-10	. SPRING. . . . . /ATTACHING PARTS/	2	
- 16	AN515-8-8	. SCREW . . . . . ----*----	2	
- 17	694-184453	. PIN,EMERGENCY EXIT LOCK	4	
- 18	AN316-6	. NUT	4	
- 19	694-184454	. PLATE,EMERGENCY EXIT LOCK PIN . . . . . /ATTACHING PARTS/	2	
- 20	AN509-10R10	. SCREW	3	
	AN364-1032	. NUT	3	
	AN936B10	. WASHER. . . . . ----*----	3	

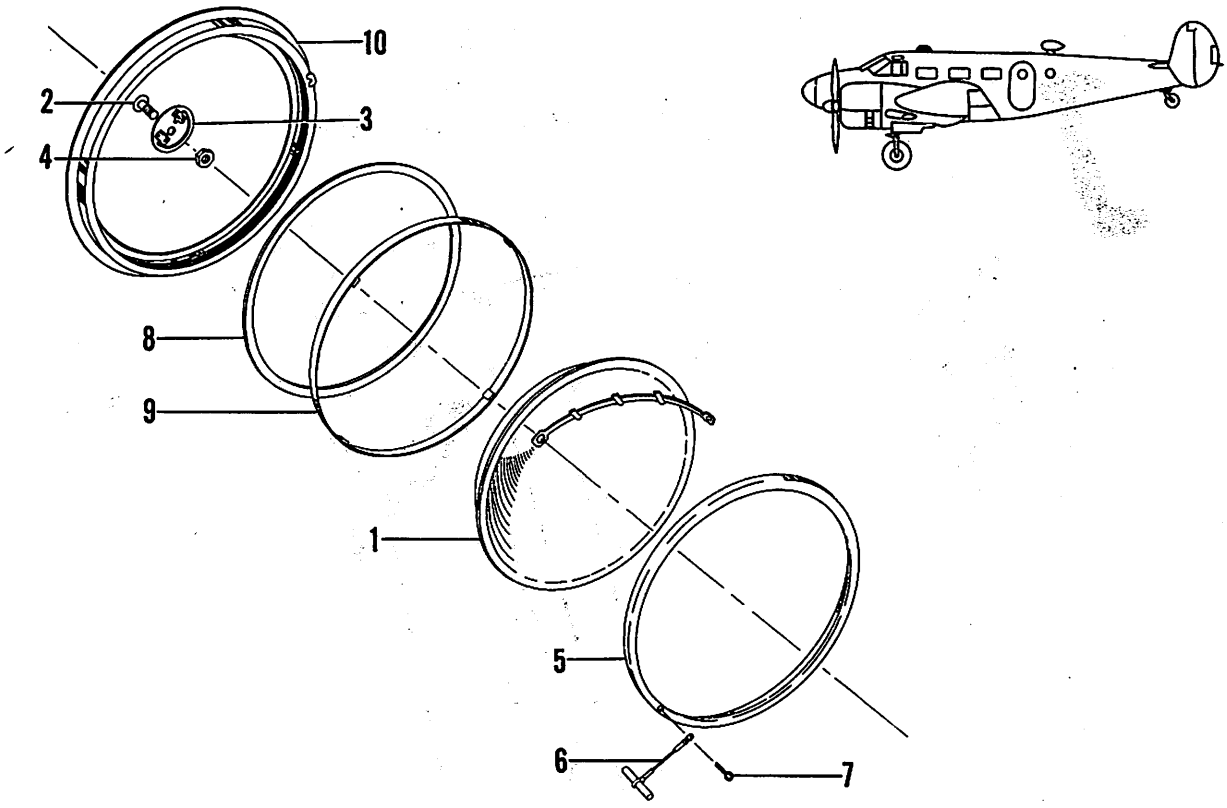

Figure 7. Astrodome Assembly

C45H-4-7

FIG. & INDEX NO.	PART NO.	DESCRIPTION 1 2 3 4 5 6 7	UNITS PER ASSY	USABLE ON CODE
7	209-0000	ASTRODOME ASSY,/SEE FIG. 2 FOR NHA/	REF	B
- 1	209-0000-14	. DOME.	1	B
- 2	209-1001	. PLATE ASSY,INSTRUMENT MOUNTING.	1	B
- 3	209-1005	. HANDLE ASSY,ASTRODOME	1	B
		/ATTACHING PARTS/		
- 4	AN316-8R	. NUT	1	
		-----*-----		
- 5	209-0000-6	. SEAL,ASTRODOME MOUNTING	1	B
- 6	209-1000	. CABLE ASSY,ASTRODOME RELEASE.	1	B
		/ATTACHING PARTS/		
- 7	209-0000-12	. PIN,COTTER /MAKE FR AN380-4-4 PIN/.	1	
		-----*-----		
- 8	209-0000-8	. GASKET,ASTRODOME MOUNTING	1	B
- 9	209-0000-4	. CUSHION,ASTRODOME MOUNTING.	1	B
- 10	209-1002	. RING ASSY,DOME MOUNTING	1	B

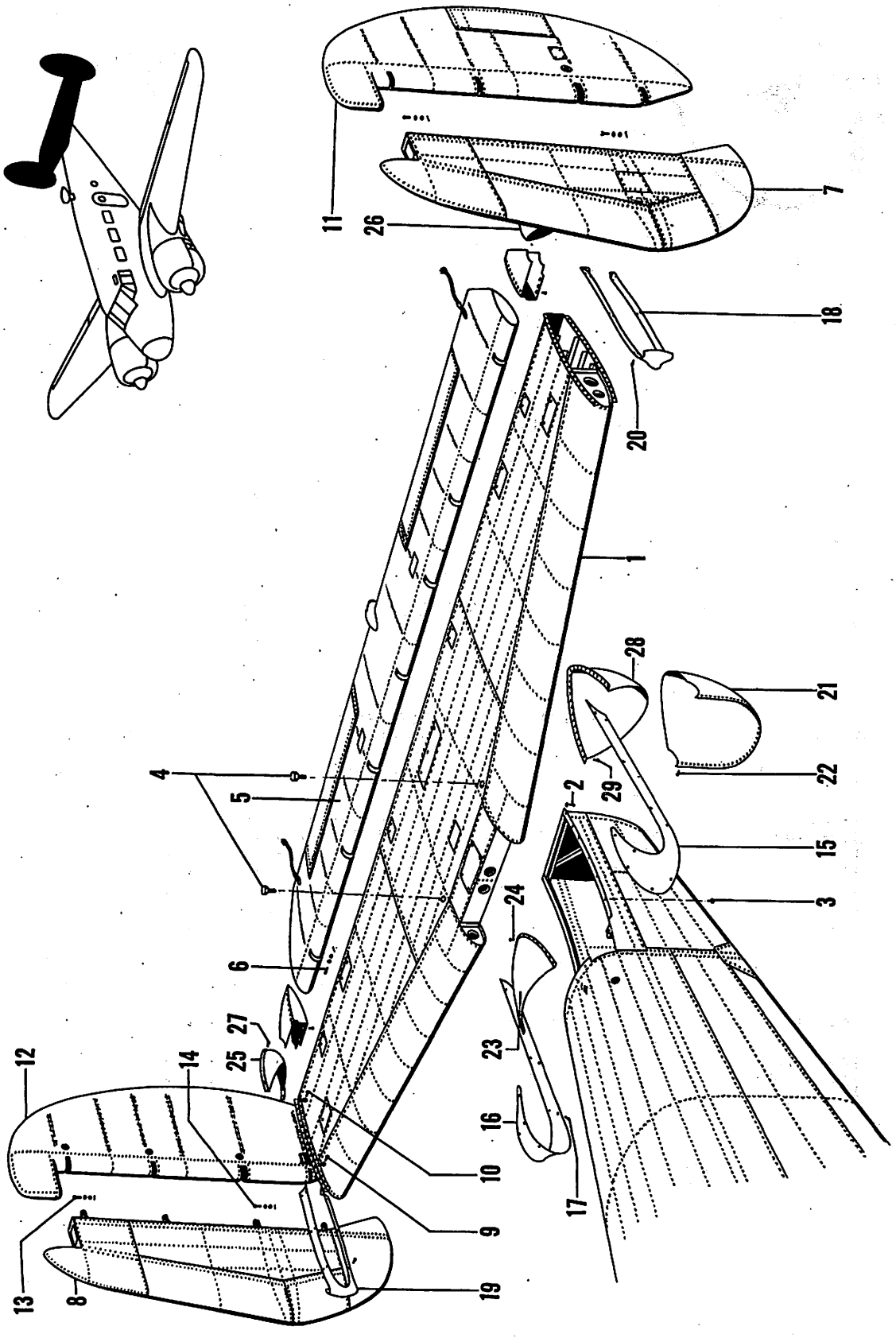

Figure 8. Tail Surface Installation

FIG. & INDEX NO.	PART NO.	DESCRIPTION 1 2 3 4 5 6 7	UNITS PER ASSY	USABLE ON CODE
8	694-186000	SURFACE INSTL,TAIL /SEE FIG. 1 FOR NHA/	1	
- 1	694-186050-600	. STABILIZER ASSY,/SEE FIG. 9/	1	
		/ATTACHING PARTS/		
- 2	AN502-10-10	. SCREW	54	
- 3	AN502-10-12	. SCREW	12	
	AN960-6	. WASHER	14	
	NO NUMBER	. WASHER,25/64 X 13/64 X .062 INCH	54	
- 4	NAS144-13	. BOLT	2	
	NAS143-4C	. WASHER	2	
	AN960-416	. WASHER	2	
	12B-048	. NUT,/72962/	2	
		----*----		
- 5	900-186175	. ELEVATOR ASSY,/SEE FIG. 10/	1	A-1,B
	694-186175	. ELEVATOR ASSY,/SEE FIG. 10/	1	A-2
		/ATTACHING PARTS/		
- 6	AN4-11	. BOLT	4	
	AN4-13	. BOLT	1	
	AN960-416	. WASHER	5	
	AN310-4	. NUT	5	
	AN380-2-2	. PIN,COTTER	5	
		----*----		
- 7	186200L	. FIN ASSY,LH /SEE FIG. 11/	1	
- 8	186200R	. FIN ASSY,RH /SEE FIG. 11/	1	
		/ATTACHING PARTS/		
- 9	AN502-10-10	. SCREW	37	
	AN960-10	. WASHER	37	
- 10	AN502-10-12	. SCREW	2	
	AN365-1032	. NUT	2	
		----*----		
- 11	186350	. RUDDER ASSY,COVERED LH /SEE FIG. 12/	1	A-1,B
	694-186350-1	. RUDDER ASSY,COVERED LH /SEE FIG. 12/	1	A-2
- 12	186350-1	. RUDDER ASSY,COVERED RH /SEE FIG. 12/	1	A-1,B
	694-186350-4	. RUDDER ASSY,COVERED RH /SEE FIG. 12/	1	A-2
		/ATTACHING PARTS/		
- 13	AN4-12	. BOLT	3	
- 14	AN4-13	. BOLT	1	
	AN960-416	. WASHER	10	
	AN310-4	. NUT	4	
	AN380-2-2	. PIN,COTTER	4	
		----*----		
- 15	407-186000-4	. FAIRING ASSY,LH	1	
- 16	407-186000-5	. FAIRING ASSY,RH	1	
		/ATTACHING PARTS/		
- 17	AN526-632R6	. SCREW	14	
		----*----		
- 18	186068L	. FAIRING ASSY,LH	1	
- 19	186068R	. FAIRING ASSY,RH	1	
		/ATTACHING PARTS/		
- 20	AN526-632-6	. SCREW	10	
		----*----		
- 21	185700-1	. COWLING ASSY	1	
		/ATTACHING PARTS/		
- 22	AN526-632-6	. SCREW	12	
	AN526-632-8	. SCREW	4	
	AN526-632-10	. SCREW	2	
		----*----		
- 23	407-186000-2	. FAIRING ASSY	1	
		/ATTACHING PARTS/		
- 24	AN526-632-6	. SCREW	14	
	AN526-632-8	. SCREW	4	
		----*----		

FIG. & INDEX NO.	PART NO.	DESCRIPTION	UNITS PER ASSY	USABLE ON CODE
8 - 25	186262-1	• FAIRING ASSY,RH • • • • • • • • • • • • • • • •	1	
- 26	186262-2	• FAIRING ASSY,LH • • • • • • • • • • • • • • • •	1	
		/ATTACHING PARTS/		
- 27	AN526-632-8	• SCREW •	10	
		----*----		
- 28	185700-3	• FAIRING ASSY• • • • • • • • • • • • • • • • • •	1	
		/ATTACHING PARTS/		
- 29	AN526-632-7	• SCREW •	8	
		----*----		

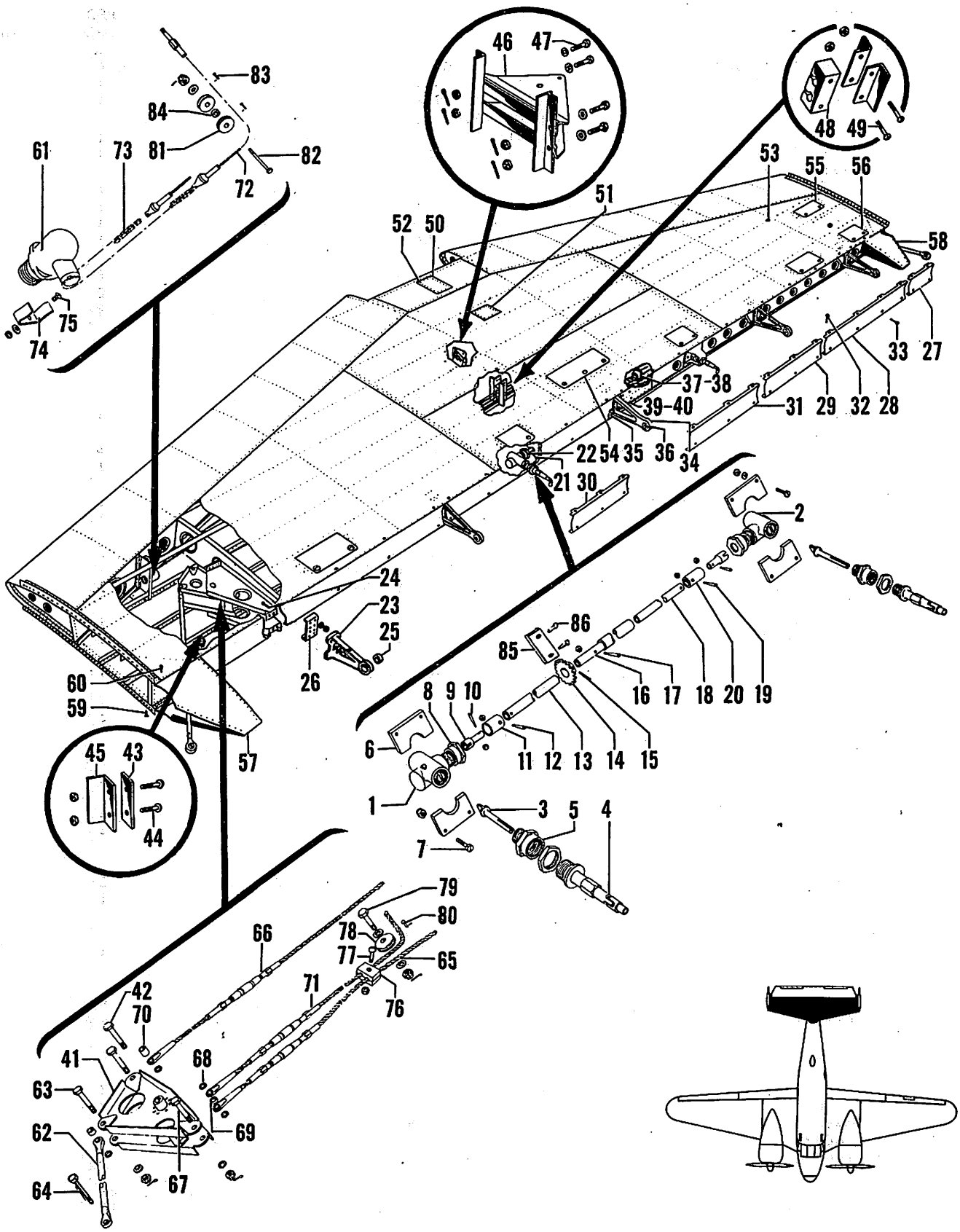

Figure 9. Stabilizer Assembly

C45H-4-9

FIG. & INDEX NO.	PART NO.	DESCRIPTION 1 2 3 4 5 6 7	UNITS PER ASSY	USABLE ON CODE
9	694-186050-600	STABILIZER ASSY,/SEE FIG. 8 FOR NHA/	REF	
	694-186050	. STABILIZER ASSY	1	
	186050A-26	. . SHAFT ASSY,ELEVATOR TAB CONTROL	1	
	187690L	. . . TAB INSTL,ELEVATOR TORQUE DRIVE LH	1	
	187690R	. . . TAB INSTL,ELEVATOR TORQUE DRIVE RH	1	
- 1	4584-11-60	. . . . DRIVE ASSY,90 DEGREE LH /08484/	1	
- 2	4584-11-10	. . . . DRIVE ASSY,90 DEGREE RH /08484/	1	
- 3	187691	. . . . SHAFT,ELEVATOR TAB	1	
- 4	187715	. . . . DRIVE,TAB MECHANISM	1	
- 5	187693	. . . . NUT,ELEVATOR TAB CONTROL CONNECTOR	1	
- 6	187783	. . . . REINFORCEMENT,90 DEGREE DRIVE SHAFT /ATTACHING PARTS/	1	
- 7	AN526-832-8	. . . . SCREW	2	
	AN960-8	. . . . WASHER	2	
	AN365-832	. . . . NUT	2	
- 8	187694	. . . . NUT,TAB CONTROL DRIVE END COVER	1	
- 9	187692	. . . . FITTING,TAB CONTROL TORQUE TUBE /ATTACHING PARTS/	1	
- 10	187714-1	. . . . PIN,TAB CONTROL SHAFT	1	
	AN365-440	. . . . NUT	1	
	187719-6	. . . SHAFT ASSY,ELEVATOR TAB CONTROL TORQUE	1	
- 11	187719-3	. . . . COUPLING,TAB CONTROL TORQUE TUBE /ATTACHING PARTS/	1	
- 12	187714-1	. . . . PIN,TAB CONTROL SHAFT	1	
	AN365-440	. . . . NUT	1	
- 13	187719-7	. . . . SHAFT,ELEVATOR TAB CONTROL TORQUE	1	
	187719-4	. . . SHAFT ASSY,ELEVATOR TAB CONTROL TORQUE	1	
- 14	187735-1	. . . . SPROCKET,ELEVATOR TAB CONTROL /ATTACHING PARTS/	1	
- 15	187714-4	. . . . PIN,TAB CONTROL SHAFT	1	
	AN365-440	. . . . NUT	1	
- 16	187719-5	. . . . SHAFT,ELEVATOR TAB CONTROL TORQUE /ATTACHING PARTS/	1	
- 17	187714-4	. . . . PIN,TAB CONTROL SHAFT	1	
	AN365-440	. . . . NUT	1	
	187719-1	. . . SHAFT ASSY,ELEVATOR TAB CONTROL TORQUE	1	
- 18	187719-2	. . . . SHAFT,ELEVATOR TAB CONTROL TORQUE TUBE /ATTACHING PARTS/	1	
- 19	187714-1	. . . . PIN,TAB CONTROL SHAFT	1	
	AN365-440	. . . . NUT	1	
- 20	187719-3	. . . . COUPLING,TAB CONTROL TORQUE TUBE	1	
	186056	. . BRACKET ASSY,ELEVATOR TAB CONTROL BEARING	1	
- 21	186056-1	. . . BRACKET,ELEVATOR TAB CONTROL	1	
- 22	AN201K6A	. . . BEARING	2	
	186060	. . HINGE ASSY,ELEVATOR OUTBD MALE	4	
- 23	186060-1	. . . BRACKET,ELEVATOR OUTBD MALE HINGE /ATTACHING PARTS/	1	
- 24	AN3-7A	. . . BOLT	4	
	AN960-10	. . . WASHER	4	
	AN365-1032	. . . NUT	4	
- 25	AN200K4	. . . BEARING	1	
- 26	186057	. . REINFORCEMENT,STABILIZER	5	
- 27	186070	. . STRIP ASSY,ELEV GAP FAIRING OUTBD LH & RH	2	
- 28	186071	. . STRIP ASSY,ELEV GAP FAIRING OUTBD LH & RH	2	
- 29	186072	. . STRIP ASSY,ELEV GAP FAIRING INBD LH & RH	2	
- 30	186073	. . STRIP ASSY,ELEVATOR GAP FAIRING CENTER LH	1	
- 31	186074	. . STRIP ASSY,ELEVATOR GAP FAIRING CENTER RH /ATTACHING PARTS/	1	
- 32	AN526-632-9	. . SCREW	24	
- 33	AN507-6-6	. . SCREW	15	

FIG. & INDEX NO.	PART NO.	DESCRIPTION 1 2 3 4 5 6 7	UNITS PER ASSY	USABLE ON CODE
9	186061	. . HINGE ASSY,ELEVATOR CENTER MALE	1	
- 34	186061-2	. . . BRACKET,ELEVATOR CENTER MALE HINGE. . . . /ATTACHING PARTS/	1	
- 35	AN3-7A/M/	. . . BOLT.	4	
	AN960-10	. . . WASHER.	8	
	AN365-1032	. . . NUT	4	
		----*----		
- 36	D4	. . . BEARING,/21335/	1	
- 37	186051-1	. . BRACKET ASSY,STABILIZER PULLEY.	1	
- 37	186051-3	. . BRACKET ASSY,STABILIZER PULLEY. . . . . /ATTACHING PARTS/	1	
- 39	AN3-4	. . BOLT.	2	
- 40	AN3-5	. . BOLT.	4	
	AN960-10	. . WASHER.	12	
	AN365-1032	. . NUT	6	
		----*----		
- 41	186170	. . BELLCRANK ASSY. . . . . /ATTACHING PARTS/	2	
- 42	AN4-26/M/	. . BOLT.	1	
	AN310-4	. . NUT	1	
	AN380-2-2	. . PIN,COTTER.	1	
		----*----		
- 43	186037	. . BUMPER,RUDDER BELLCRANK STOP. . . . . /ATTACHING PARTS/	2	
- 44	AN515-6-8	. . SCREW	2	
	22M62	. . NUT,/72962/	2	
		----*----		
- 45	186038	. . ANGLE,RUDDER BELLCRANK STOP	2	
- 46	186043	. . BRACKET,RUDDER TAB CONTROL PULLEY . . . . /ATTACHING PARTS/	1	
- 47	AN3-4	. . BOLT.	4	
	AN960-10	. . WASHER.	4	
	AN365-1032	. . NUT	4	
	AN380-2-2	. . PIN,COTTER.	4	
		----*----		
	187695	. . STOP INSTL,RUDDER TAB CONTROL	2	
- 48	187689	. . . BLOCK,RUDDER TAB CONTROL STOP . . . . . /ATTACHING PARTS/	1	
- 49	NO NUMBER	. . . SCREW,6/32 X 1 1/4 IN. ROUND MACHINE HEAD	2	
	22M62	. . . NUT,/72962/	2	
		----*----		
- 50	694-186040	. . DOOR,STABILIZER INSPECTION.	1	
- 51	186040-2	. . DOOR,STABILIZER INSPECTION. . . . . /ATTACHING PARTS/	1	
- 52	AN526-832-8	. . SCREW	28	
		----*----		
- 53	81A16758	. . PLUG,/88692/.	4	
- 54	186046	. . PLATE ASSY,STABILIZER RUD CABLE INSPECTION.	1	
- 55	186047	. . PLATE ASSY,STAB. RUD CABLE & TAB INSPECTION	4	
- 56	186048	. . PLATE ASSY,RUDDER BELLCRANK INSPECTION. . .	4	
- 57	186033	. . BOX ASSY,RUDDER HORN LH	1	
- 58	186033-1	. . BOX ASSY,RUDDER HORN RH . . . . . /ATTACHING PARTS/	1	
- 59	AN526-832-6	. . SCREW	3	
- 60	AN526-832-8	. . SCREW	3	
		----*----		
- 61	4707-2-10	. . DRIVE ASSY,RUDDER TAB CONTROL /08484/ . . .	1	
- 62	186160-1	. LINK ASSY,TAIL SURFACE CONTROL. . . . . /ATTACHING PARTS/	2	
- 63	AN4-13/M/	. BOLT.	1	
- 64	AN4-14/M/	. BOLT.	1	
	AN960-416	. WASHER.	2	
	AN310-4	. NUT	2	
	AN380-2-2	. PIN,COTTER.	2	
		----*----		

FIG. & INDEX NO.	PART NO.	DESCRIPTION 1 2 3 4 5 6 7	UNITS PER ASSY	USABLE ON CODE
9 - 65	404-187013	CABLE ASSY,RUDDER CROSS REAR	1	
- 66	404-187012	CABLE ASSY,RUDDER CROSS FRONT	1	
		/ATTACHING PARTS/		
- 67	AN3-12/M/	BOLT	2	
- 68	187002-2	SPACER,RUDDER CONTROL	2	
- 69	187002	SPACER,RUDDER CONTROL	2	
- 70	100696-S12-8-011	SPACER	2	
	AN960-10	WASHER	2	
	AN960-416	WASHER	4	
	AN310-3	NUT	2	
	AN380-2-2	PIN,COTTER	2	
		----*----		
- 71	404-187011-2	CABLE ASSY,RUDDER	2	
- 72	187111-2	CABLE ASSY,RUDDER TAB CONTROL /SEE FIG. 64/	1	
- 73	187111-6	CHAIN,RUDDER TAB CONTROL /SEE FIG. 64/	1	
		/ATTACHING PARTS/		
	102809-A078-012	PIN	2	
		----*----		
- 74	187713-2	GUARD,CHAIN TAB CONTROL	1	
		/ATTACHING PARTS/		
- 75	AN515-6-6	SCREW	2	
	AN960-6	WASHER	2	
	AN365-632	NUT	2	
		----*----		
- 76	84-187035	SPACER,RUDDER BALANCE CABLE	4	
		/ATTACHING PARTS/		
- 77	AN526-832-12	SCREW	1	
	AN365-832	NUT	1	
		----*----		
- 78	AN210-4A	PULLEY	2	
		/ATTACHING PARTS/		
- 79	AN4-11/M/	BOLT	1	
- 80	AN392-21	PIN	1	
	AN960-416	WASHER	1	
	AN960-416L	WASHER	1	
	AN310-4	NUT	1	
	AN380-2-2	PIN,COTTER	1	
		----*----		
- 81	AN210-2A	PULLEY	2	
		/ATTACHING PARTS/		
- 82	AN3-22	BOLT	1	
- 83	AN392-61	PIN	1	
- 84	100801-Y3-1187	SPACER	1	
	AN960-10	WASHER	1	
	AN310-3	NUT	1	
	AN380-2-2	PIN,COTTER	3	
		----*----		
- 85	187737-1	GUARD,ELEVATOR TAB CONTROL CHAIN	1	
		/ATTACHING PARTS/		
- 86	AN526-632	SCREW	2	
	AN960-6	WASHER	2	
	AN365-632	NUT	2	
		----*----		

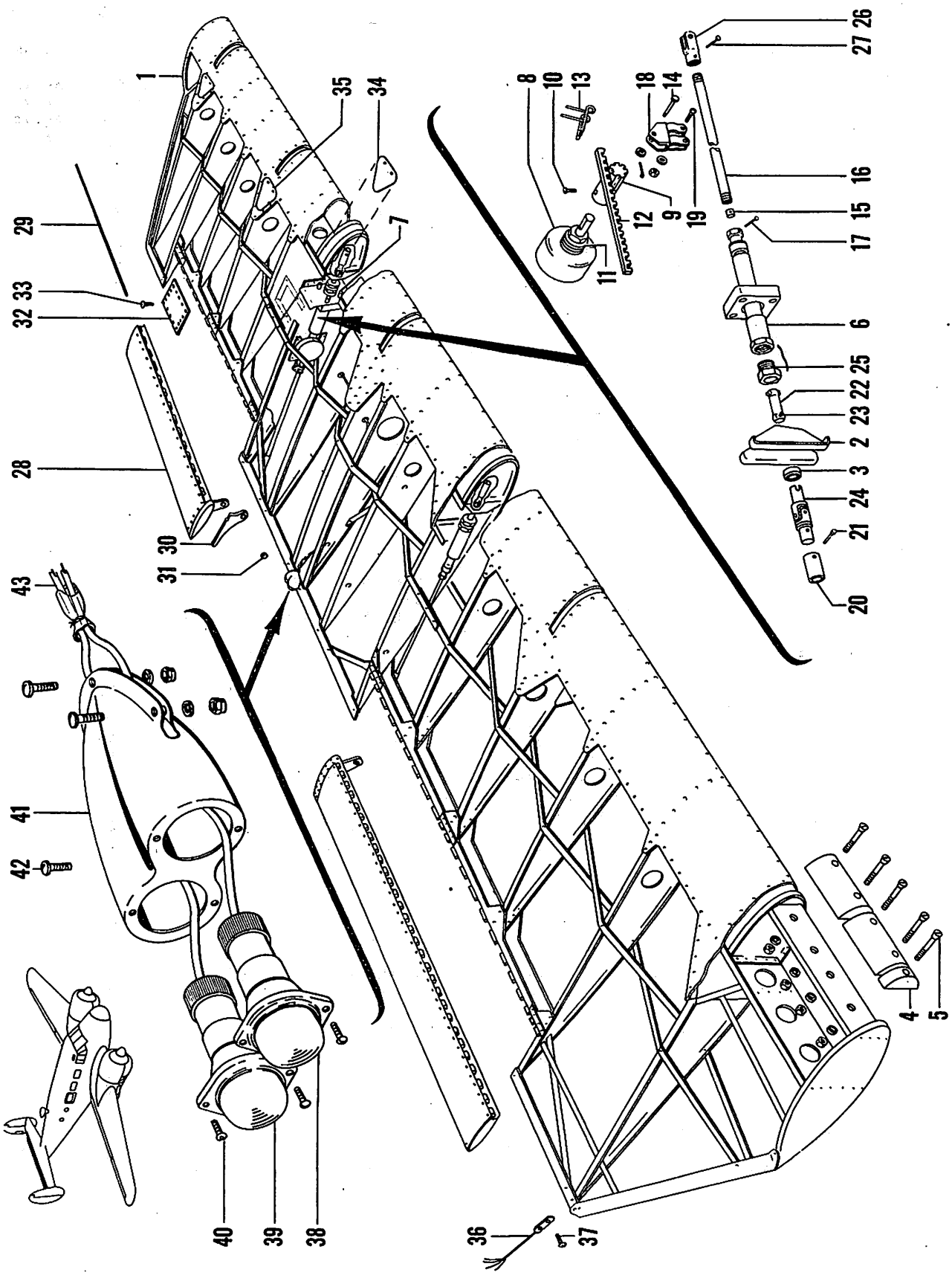

Figure 10. Covered Elevator Assembly

FIG. & INDEX NO.	PART NO.	DESCRIPTION 1 2 3 4 5 6 7	UNITS PER ASSY	USABLE ON CODE
10	900-186175	ELEVATOR ASSY,COVERED /SEE FIG. 8 FOR NHA/	REF	A-1,B
	694-186175	ELEVATOR ASSY,COVERED /SEE FIG. 8 FOR NHA/	REF	A-2
- 1	900-186100	. FRAME ASSY,ELEVATOR	1	A-1,B
	900-186100-1	. FRAME ASSY,ELEVATOR	1	A-2
	186119	. . BRACKET ASSY,ELEVATOR TAB CONTROL BEARING	2	
- 2	186119-1	. . . CASTING	1	
- 3	K6A	. . . BEARING,/21335/	1	
- 4	186132	. . WEIGHT,ELEVATOR BALANCE	4	
		/ATTACHING PARTS/		
- 5	AN510-10-24	. . SCREW	2	
	AN970-3	. . WASHER	2	
	AN365-1032	. . NUT	2	
		----*----		
	404-186110	. MECHANISM INSTL,ELEVATOR TAB CONTROL LH	1	
	404-186110-1	. MECHANISM INSTL,ELEVATOR TAB CONTROL RH	1	
- 6	404-186110-3	. . ACTUATOR ASSY,ELEVATOR TAB	1	
		/MAKE FR /08484/ 4576-36-10/		
		/ATTACHING PARTS/		
- 7	AN3-7A	. . BOLT	4	
		----*----		
- 8	404-186117	. . RHEOSTAT,ELEVATOR TAB INDICATOR /LH ONLY/	1	
		/MAKE FR /57733/ G-106337/		
- 9	404-186112	. . PINION ASSY,TAB INDICATOR MECHANISM	1	
		/LH ONLY/		
		/ATTACHING PARTS/		
- 10	AN500A6-3	. . SCREW	1	
		----*----		
- 11	AN960PD616	. . WASHER,RHEOSTAT SPACER /LH ONLY/	3	
- 12	404-186113	. . RACK ASSY,TAB INDICATOR MECHANISM /LH ONLY/	1	
		/MAKE FR /71041/ L503/		
- 13	404-186114	. . SPRING,TAB INDICATOR MECHANISM /LH ONLY/	1	
		/ATTACHING PARTS/		
- 14	AN392-19	. . PIN	1	
	AN960-4	. . WASHER	2	
	AN380-2-1	. . PIN,COTTER	1	
		----*----		
- 15	187811	. . PLUG,TAB CONTROLS	1	
- 16	187726-4	. . ROD ASSY,ELEVATOR TAB CONTROL	1	
- 17	AN470AD3	. . RIVET	1	
- 18	404-186111	. . BRACKET ASSY,TAB INDICATOR MECHANISM	1	
		/LH ONLY/		
		/ATTACHING PARTS/		
- 19	AN520-10-7	. . SCREW	2	
	AN960-10	. . WASHER	2	
	AN365-1032	. . NUT	2	
		----*----		
- 20	187727	. . TUBE,TORQUE	1	
		/ATTACHING PARTS/		
- 21	102809-A125-026	. . PIN	1	
		----*----		
	187710	. . DRIVE ASSY,TORQUE TAB CONTROL	1	
- 22	187710-1	. . . SHAFT,TORQUE TAB CONTROL DRIVE	1	
		/ATTACHING PARTS/		
- 23	187710-2	. . . PIN	2	
		----*----		
- 24	187712	. . UNIVERSAL,TAB CONTROL	1	
- 25	187711	. . NUT,TAB CONTROL ACTUATOR END COVER	2	
- 26	S-168	. FITTING,END	2	
- 27	AN470AD3	. RIVET	1	
- 28	186110	. TAB ASSY,ELEVATOR	2	
		/ATTACHING PARTS/		
- 29	105774-C-085-05600	. PIN,HINGE	1	
		----*----		

FIG. & INDEX NO.	PART NO.	DESCRIPTION 1 2 3 4 5 6 7	UNITS PER ASSY	USABLE ON CODE
10	186127	. . HORN ASSY,ELEVATOR TAB.	1	
- 30	186128-2	. . . HORN,ELEVATOR TAB	1	
- 31	K3-6	. . . BEARING,/21335/	1	
- 32	186151	. DOOR,ELEVATOR TAB INDICATOR INSPECTION. . . . /ATTACHING PARTS/	2	
- 33	AN526-832-6	. SCREW . . . . . *----	8	
- 34	694-186052-9	. COVER,ELEVATOR ACCESS LH.	1	A-2
	694-186052-10	. COVER,ELEVATOR ACCESS RH.	1	A-2
- 35	694-186052-7	. COVER,ELEVATOR ACCESS	4	A-2
- 36	AN/ASA-3	WICK,STATIC /SEE FIG. 89/ . . . . . /ATTACHING PARTS/	REF	
- 37	AN526-6-7	SCREW . . . . . *----	2	
	694-180980	EQUIPMENT INSTL,TAIL SURFACE ELECTRICAL . . . . /SEE FIG. 1 FOR NHA/	1	
- 38	AN3158-1	. LIGHT ASSY,TAIL /WHITE LENS/.	1	
- 39	AN3158-2	. LIGHT ASSY,TAIL /YELLOW LENS/ . . . . . /ATTACHING PARTS/	1	
- 40	AN530-4-8	. SCREW . . . . . *----	2	
- 41	404-180990	. FAIRING ASSY,TAIL LIGHT . . . . . /ATTACHING PARTS/	1	
- 42	AN530-6-6	. SCREW	2	
	AN526-632-9	. SCREW	2	
	AN960-6	. WASHER.	2	
	AN365-6	. NUT . . . . . *----	2	
- 43	694-180726	. HARNESS ASSY,TAIL LIGHT	1	

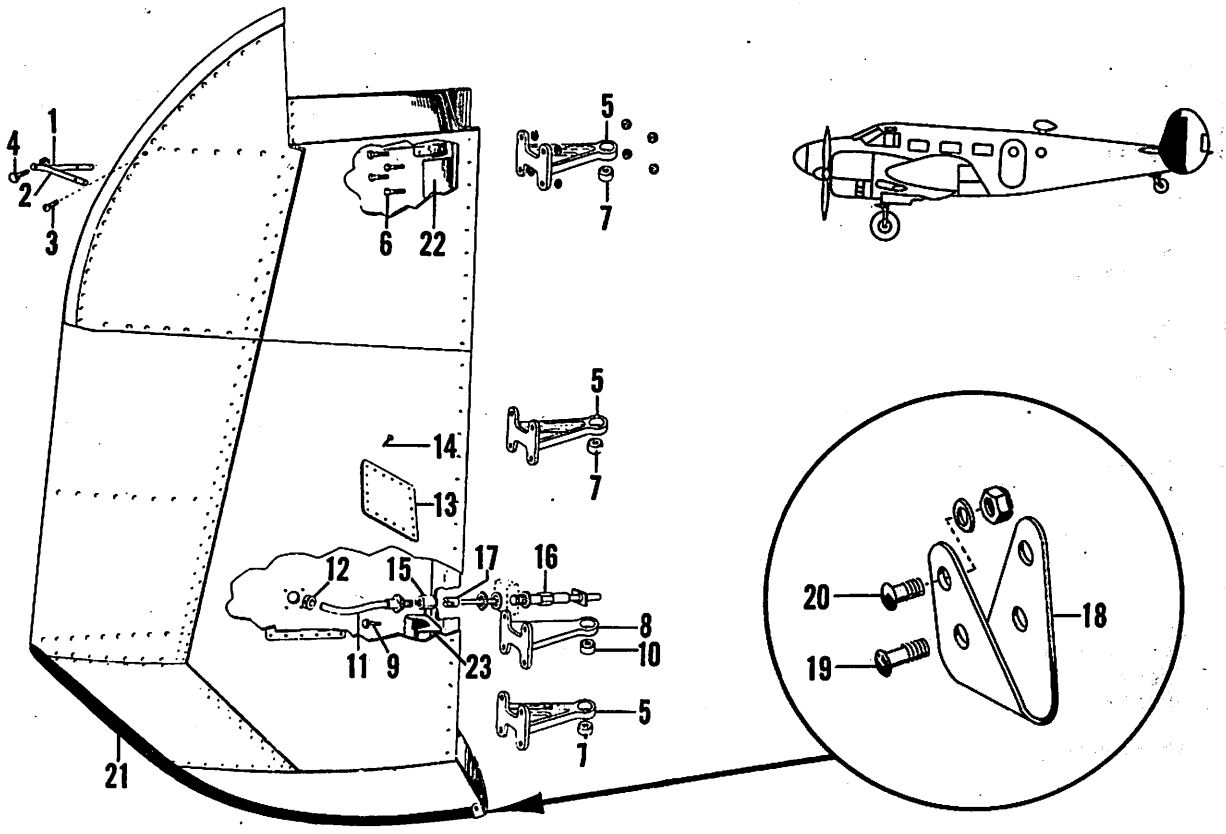

Figure 11. Fin Assembly

C45H-4-11

FIG. & INDEX NO.	PART NO.	DESCRIPTION 1 2 3 4 5 6 7	UNITS PER ASSY	USABLE ON CODE
11	186200L	FIN ASSY,LH /SEE FIG. 8 FOR NHA/	REF	
	186200R	FIN ASSY,RH /SEE FIG. 8 FOR NHA/	REF	
- 1	180451-1	. BRACKET ASSY,ANTENNA MOUNTING	1	
- 2	180451-2	. BRACKET ASSY,ANTENNA MOUNTING	1	
		/ATTACHING PARTS/		
- 3	AN526-832-8	. SCREW	4	
- 4	AN515-8-8	. SCREW	1	
	AN365-832	. NUT	1	
		----*----		
	186210	. HINGE ASSY,RUDDER MALE	3	
- 5	186210-1	. . BRACKET,HINGE	1	
		/ATTACHING PARTS/		
- 6	AN3-7A	. . BOLT	4	
	AN960-10	. . WASHER	4	
	AN365-1032	. . NUT	4	
		----*----		
- 7	SIK-5	. . BEARING,/21335/	1	
	186215	. HINGE ASSY,RUDDER MALE	1	
- 8	186215-2	. . BRACKET,HINGE	1	
		/ATTACHING PARTS/		
- 9	AN3-7A	. . BOLT	4	
	AN960-10	. . WASHER	4	
	AN365-1032	. . NUT	4	
		----*----		
- 10	SIK-5	. . BEARING,/21335/	1	
- 11	187748	. SHAFT ASSY,RUDDER TAB CONTROL	1	
- 12	AN931-16-22	. GROMMET	1	

FIG. & INDEX NO.	PART NO.	DESCRIPTION 1 2 3 4 5 6 7	UNITS PER ASSY	USABLE ON CODE
11 - 13	186206	• DOOR,FIN INSPECTION • • • • • • • • • • • • •	1	
		/ATTACHING PARTS/		
- 14	AN525-832R	• SCREW •	18	
		----*----		
- 15	187704	• NUT,CONNECTING RUDDER TAB CONTROL • • • • • •	1	
- 16	187715	• DRIVE,TAB MECHANISM TORQUE TUBE • • • • • • •	1	
- 17	187716	• FITTING,RUDDER TAB CONTROL FLEXIBLE SHAFT END	1	
- 18	186003	• STRAP,FIN • • • • • • • • • • • • • • • • • •	1	
		/ATTACHING PARTS/		
- 19	AN526-632-8	• SCREW •	2	
- 20	AN526-632-6	• SCREW •	2	
	AN960-6	• WASHER •	4	
	AN365-632	• NUT •	4	
		----*----		
- 21	2M-34739-39	• SHOE,V-TYPE ABRASION /25472/ • • • • • • • •	1	
- 22	186207-1	• REINFORCEMENT,FIN REAR SPAR • • • • • • • • •	1	
- 23	186207-2	• REINFORCEMENT,FIN REAR SPAR • • • • • • • • •	1	

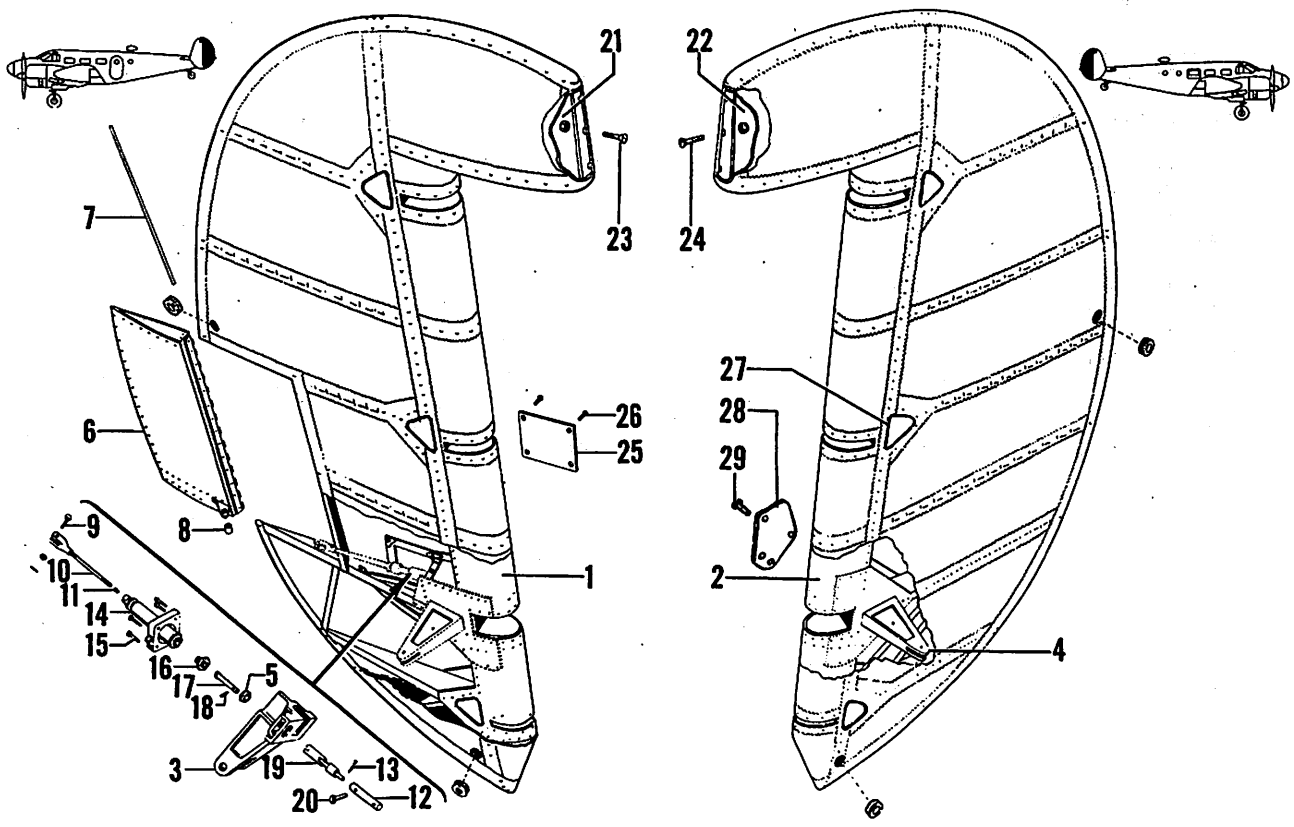

Figure 12. Covered Rudder Assembly

C45H-4-12

FIG. & INDEX NO.	PART NO.	DESCRIPTION 1 2 3 4 5 6 7	UNITS PER ASSY	USABLE ON CODE
12	186350	RUDDER ASSY,COVERED LH /SEE FIG. 8 FOR NHA/	REF	A-1,B
	694-186350-1	RUDDER ASSY,COVERED LH /SEE FIG. 8 FOR NHA/	REF	A-2
	186350-1	RUDDER ASSY,COVERED RH /SEE FIG. 8 FOR NHA/	REF	A-1,B
	694-186350-4	RUDDER ASSY,COVERED RH /SEE FIG. 8 FOR NHA/	REF	A-2
- 1	186250	. RUDDER ASSY,LH /TRIM ON INSTL/	1	
- 2	186250-1	. RUDDER ASSY,RH /TRIM ON INSTL/	1	
	186256	. . HORN ASSY,RUDDER LH	1	
	186256-1	. . HORN ASSY,RUDDER RH	1	
- 3	186256-2	. . . HORN,RUDDER LH	1	
- 4	186256-3	. . . HORN,RUDDER RH	1	
- 5	AN201K6A	. . . BEARING	1	
- 6	186270	. . TAB ASSY,RUDDER /LH ONLY/	1	
		/ATTACHING PARTS/		
- 7	186250-14	. . PIN,RUDDER TAB HINGE	1	
		----*----		
	186271-1	. . . RIB ASSY,RUDDER TAB HORN	1	
- 8	AN200K3L	. . . . BEARING	1	
	187705	. . CONTROL INSTL,RUDDER TAB	1	
		/ATTACHING PARTS/		
- 9	S-124-17	. . BOLT	1	
	AN960-10	. . WASHER	1	
	AN320-3	. . NUT	1	
	AN380-2-2	. . PIN,COTTER	1	
		----*----		

FIG. & INDEX NO.	PART NO.	DESCRIPTION (1 2 3 4 5 6 7)	UNITS PER ASSY	USABLE ON CODE
12 - 10	187707	. . . ROD,RUDDER TAB CONTROL.	1	
- 11	187811	. . . PLUG,TAB CONTROL.	1	
- 12	187727	. . . TUBE,ELEVATOR TAB CONTROL TORQUE. . . .	1	
- 13	AN280H204	. . . KEY	1	
- 14	4576-36-10	. . . ACTUATOR ASSY,TAB /08484/	1	
		/ATTACHING PARTS/		
- 15	AN3-7A	. . . BOLT.	4	
	AN960-10L	. . . WASHER.	4	
	AN365-1032	. . . NUT	4	
		-----*-----		
- 16	187711	. . . NUT,TAB CONTROL ACTUATOR END COVER. . .	1	
	187710	. . . DRIVE ASSY,TAB CONTROL TORQUE	1	
- 17	187710-1	. . . . SHAFT,TAB CONTROL TORQUE DRIVE. . . .	1	
- 18	187710-2	. . . . PIN	1	
- 19	187712	. . . JOINT,TAB CONTROL UNIVERSAL	1	
- 20	102809-A125-026	. . . PIN	1	
	186253L	. . BALANCE ASSY,RUDDER LH.	1	
	186253R	. . BALANCE ASSY,RUDDER RH.	1	
- 21	186253-6	. . . LEAD,BALANCE LH	1	
- 22	186253-7	. . . LEAD,BALANCE RH	1	
		/ATTACHING PARTS/		
- 23	AN505-8-28	. . . SCREW,LH.	3	
- 24	AN505-8-24	. . . SCREW,RH.	3	
	AN365-832	. . . NUT	6	
		-----*-----		
- 25	186278	. . . PLATE,RUDDER TAB INSPECTION /LH ONLY/ . .	1	A-1,B
	694-186278-1	. . . PLATE,RUDDER TAB INSPECTION /LH ONLY/ . .	1	A-2
		/ATTACHING PARTS/		
- 26	AN526-6-6	. . . SCREW	4	A-1,B
	AN526-832R8	. . . SCREW	4	A-2
		-----*-----		
- 27	694-186052-7	. COVER,INSPECTION.	3	A-2
- 28	694-186351	. COVER,INSPECTION /RH ONLY/.	1	A-2
		/ATTACHING PARTS/		
- 29	AN526-832R8	. SCREW	4	
		-----*-----		

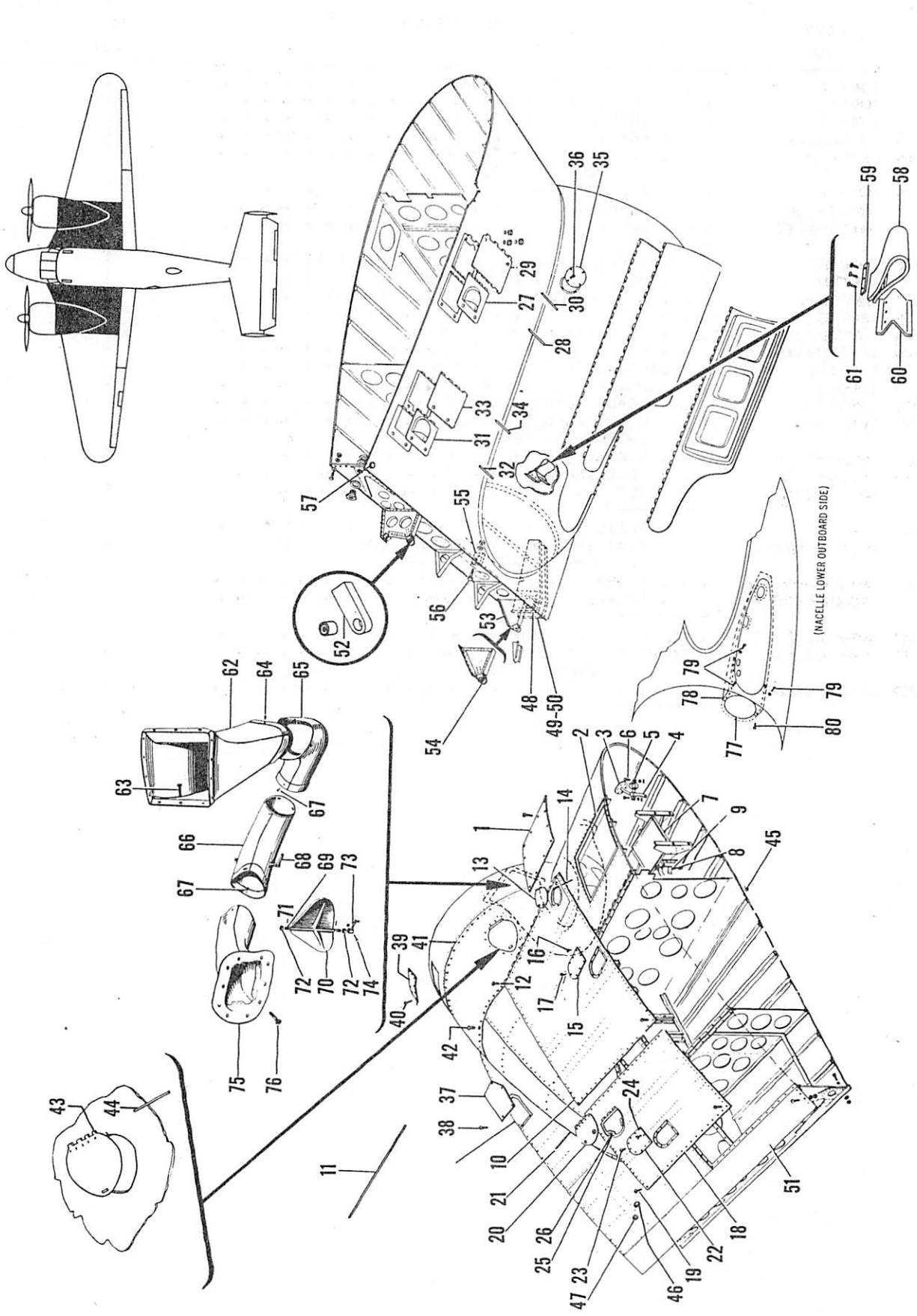

Figure 13. Center Section Wing Assembly

FIG. & INDEX NO.	PART NO.	DESCRIPTION 1 2 3 4 5 6 7	UNITS PER ASSY	USABLE ON CODE
13	694-181100	WING ASSY,CENTER SECTION LH/SEE FIG. 1 FOR NHA/	1	
	694-181100-1	WING ASSY,CENTER SECTION RH/SEE FIG. 1 FOR NHA/	1	
	84-189400L	. COMPARTMENT INSTL,BATTERY LH.	1	
	84-189400R	. COMPARTMENT INSTL,BATTERY RH.	1	
- 1	84-181106	. . COVER ASSY,BATTERY COMPARTMENT LH	1	
	84-181106-1	. . COVER ASSY,BATTERY COMPARTMENT RH	1	
- 2	84-181107L	. . FRAME ASSY,BATTERY COMPARTMENT OPENING LH .	1	
	84-181107R	. . FRAME ASSY,BATTERY COMPARTMENT OPENING RH .	1	
- 3	181109PL	. . NIPPLE,BATTERY TUBE LH.	1	
	181109PR	. . NIPPLE,BATTERY TUBE RH.	1	
- 4	181110P	. . TUBE,DRAIN.	1	
- 5	184444	. . CLAMP,BATTERY TUBE. . . . . /ATTACHING PARTS/	2	
- 6	AN3-7	. . BOLT.	1	
	AN310-3	. . NUT	1	
	AN380-2-2	. . PIN,COTTER.	1	
		----*----		
- 7	84-181105L	. . PAN ASSY,BATTERY COMPARTMENT LH	1	
	84-181105R	. . PAN ASSY,BATTERY COMPARTMENT RH	1	
- 8	104662L	. . . CLAMP,BATTERY JAR LH.	1	
	104662R	. . . CLAMP,BATTERY JAR RH. . . . . /ATTACHING PARTS/	1	
	AN526-6-8	. . . SCREW	2	
	AN365-632	. . . NUT	2	
		----*----		
- 9	84-181120	. . . PAD,BATTERY JAR	1	
- 10	181149	. COVER ASSY,MAIN FUEL TANK LH.	1	
	181149-1	. COVER ASSY,MAIN FUEL TANK RH. . . . . /ATTACHING PARTS/	1	
- 11	105774-C-085-03600	. PIN,HINGE	1	
- 12	AN526-8-9	. SCREW	24	
		----*----		
- 13	181159	. . DOOR ASSY,FILLER NECK COVER . . . . . /ATTACHING PARTS/	1	
- 14	105774-C-063-00304	. . PIN,HINGE	1	
		----*----		
- 15	181157L	. . COVER ASSY,MAIN TANK LIQUIDOMETER . . . . . INSPECTION DOOR LH	1	
	181157R	. . COVER ASSY,MAIN TANK LIQUIDOMETER . . . . . INSPECTION DOOR RH. . . . . /ATTACHING PARTS/	1	
- 16	AN525-832-8	. . SCREW	1	
- 17	AN525-832-9	. . SCREW	6	
		----*----		
- 18	181164	. COVER ASSY,REAR FUEL TANK LH.	1	
	181164-1	. COVER ASSY,REAR FUEL TANK RH. . . . . /ATTACHING PARTS/	1	
- 19	AN526-8-9	. SCREW	28	
		----*----		
- 20	181159	. . DOOR ASSY,FILLER NECK COVER PLATE . . . . . /ATTACHING PARTS/	1	
- 21	105774-C-063-00304	. . PIN,HINGE	1	
		----*----		
- 22	181156L	. . COVER ASSY,REAR TANK LIQUIDOMETER . . . . . INSPECTION DOOR LH	1	
	181156R	. . COVER ASSY,REAR TANK LIQUIDOMETER . . . . . INSPECTION DOOR RH /ATTACHING PARTS/	1	
- 23	AN525-832-7	. . SCREW	7	
- 24	AN525-832-8	. . SCREW	3	
		----*----		

FIG. & INDEX NO.	PART NO.	DESCRIPTION 1 2 3 4 5 6 7	UNITS PER ASSY	USABLE ON CODE
13 - 25	181169	. FLANGE ASSY,WING FUEL TANK FILLER NECK. . . . /ATTACHING PARTS/	2	
- 26	AN526-8-9	. SCREW	12	
		-----*-----		
	694-181174	. DOOR INSTL,MAIN FUEL TANK SUMP INSPECTION LH.	1	
	694-181174-1	. DOOR INSTL,MAIN FUEL TANK SUMP INSPECTION RH.	1	
- 27	181175U	. . DOOR ASSY,MAIN FUEL TANK SUMP INSPECTION. . /ATTACHING PARTS/	1	
- 28	105774-C-063-00400	. . PIN,HINGE	1	
		-----*-----		
- 29	694-181176	. . DOOR ASSY,MAIN FUEL TANK SUMP INSPECTION LH	1	
	694-181176-1	. . DOOR ASSY,MAIN FUEL TANK SUMP INSPECTION RH /ATTACHING PARTS/	1	
- 30	105774-C-063-00700	. . PIN,HINGE	1	
		-----*-----		
	181185UL	. DOOR INSTL,REAR FUEL TANK SUMP INSPECTION LH.	1	
	181185UR	. DOOR INSTL,REAR FUEL TANK SUMP INSPECTION RH.	1	
- 31	181175U	. . DOOR ASSY,REAR FUEL TANK SUMP INSPECTION. . /ATTACHING PARTS/	1	
- 32	105774-C-063-00400	. . PIN,HINGE	1	
		-----*-----		
- 33	181178	. . DOOR ASSY,REAR FUEL TANK SUMP INSPECTION. . /ATTACHING PARTS/	1	
- 34	105774-C-063-00700	. . PIN,HINGE	1	
		-----*-----		
- 35	181105	. CAP,VEE BRACE BOLT. . . . . /ATTACHING PARTS/	2	
- 36	AN526-6-8	. SCREW	8	
		-----*-----		
- 37	404-181160	. DOOR ASSY,CENTER SECTION INSPECTION LH. . . .	1	
	404-181160-1	. DOOR ASSY,CENTER SECTION INSPECTION RH. . . . /ATTACHING PARTS/	1	
- 38	AN526-8-8	. SCREW	6	
		-----*-----		
- 39	181124	. DOOR,OIL SOLENOID INSPECTION LH	1	
	181127	. DOOR,OIL SOLENOID INSPECTION RH . . . . . /ATTACHING PARTS/	1	
- 40	AN526-8-8	. SCREW	10	
		-----*-----		
- 41	694-189800-4	. SHEET ASSY,NACELLE OIL TANK LH.	1	
	694-189800-5	. SHEET ASSY,NACELLE OIL TANK RH. . . . . /ATTACHING PARTS/	1	
- 42	AN526-632-6	. SCREW	62	
		-----*-----		
- 43	189817	. . DOOR ASSY,OIL TANK FILLER . . . . . /ATTACHING PARTS/	1	
- 44	105774-C-063-00300	. . PIN,HINGE	1	
		-----*-----		
- 45	AN931-4-7	. GROMMET	1	
- 46	81A16758	. PLUG,RUBBER /88692/	1	
- 47	B111745	. JACK,GROUND /37942/	1	
	18265	. BRACKET ASSY,FLAP CONTROL SCREW	1	
- 48	182651	. . GUARD,AILERON CONTROL CABLE . . . . . /ATTACHING PARTS/	1	
- 49	AN520-4-8	. . SCREW	2	
- 50	AN524-4-10	. . SCREW	2	
	AN960D12	. . WASHER.	8	
	AN345-4	. . NUT	4	
		-----*-----		

FIG. & INDEX NO.	PART NO.	DESCRIPTION 1 2 3 4 5 6 7	UNITS PER ASSY	USABLE ON CODE
13 - 51	18162-1L	. HINGE ASSY,FLAP INBD LH	1	
	18162-1R	. HINGE ASSY,FLAP INBD RH	1	
- 52	181620	. . BRACKET ASSY,WIDE FLAP HINGE BEARING. . .	1	
- 53	18162-2L	. HINGE ASSY,FLAP CENTER LH	1	
	18162-2R	. HINGE ASSY,FLAP CENTER RH	1	
- 54	181620	. . BRACKET ASSY,WIDE FLAP HINGE BEARING. . .	1	
	187660L	. STOP INSTL,AILERON CONTROL LH	1	
	187660R	. STOP INSTL,AILERON CONTROL RH	1	
- 55	187662	. . BLOCK,AILERON CONTROL STOP LH & RH. . . . /ATTACHING PARTS/	1	
- 56	AN515-6-40	. . SCREW	2	
	AN960-6	. . WASHER.	2	
	AN365-632	. . NUT	2	
		----*----		
- 57	81A16758	. PLUG,/88692/.	1	
- 58	824-181115	. SHOE,LANDING GEAR DRAG BRAKE.	1	
- 59	884-181116	. SPRING,LANDING GEAR DRAG BRAKE ATTACHING. . .	1	
- 60	824-181117	. BRACKET,LANDING GEAR DRAG BRAKE ATTACHING . . /ATTACHING PARTS/	1	
- 61	AN526-10-14	. SCREW	3	
	AN960-10	. WASHER.	3	
	AN365-1032	. NUT	3	
		----*----		
	404-189860L	. DUCT INSTL,OIL RADIATOR AIR LH.	1	
	404-189860R	. DUCT INSTL,OIL RADIATOR AIR RH.	1	
- 62	18S9863	. . DUCT,OIL RADIATOR AIR UPPER END LH. . . .	1	
	18S9863-1	. . DUCT,OIL RADIATOR AIR UPPER END RH. . . . /ATTACHING PARTS/	1	
- 63	AN526-8-8	. . SCREW	14	
- 64	AN526-8-6	. . SCREW	9	
		----*----		
- 65	404-189860-16	. . DUCT ASSY,OIL RADIATOR AIR LH	1	
	404-189860-15	. . DUCT ASSY,OIL RADIATOR AIR RH	1	
- 66	404-189860-20	. . DUCT ASSY,VALVE LH.	1	
	404-189860-21	. . DUCT ASSY,VALVE RH. . . . . /ATTACHING PARTS/	1	
- 67	AN526-8-6	. . SCREW	6	
		----*----		
- 68	189862L	. . . VALVE ASSY,OIL RADIATOR AIR DUCT LH . . .	1	
	189862R	. . . VALVE ASSY,OIL RADIATOR AIR DUCT RH . . .	1	
- 69	189864	. . . . SHAFT,OIL RADIATOR AIR DUCT VALVE . . .	1	
- 70	189865	. . . . PLATE,OIL RADIATOR AIR DUCT VALVE . . . /ATTACHING PARTS/	1	
- 71	AN515-8-12	. . . . SCREW	4	
	AN365-832	. . . . NUT	4	
		----*----		
- 72	189869	. . . COLLAR,OIL RADIATOR AIR DUCT VALVE. . . .	2	
- 73	189863	. . . ARM ASSY,OIL RADIATOR AIR DUCT VALVE. . . /ATTACHING PARTS/	1	
- 74	AN3-11A	. . . BOLT.	1	
	AN960-10	. . . WASHER.	1	
	AN365-1032	. . . NUT	1	
		----*----		
- 75	404-189860-10	. . DUCT ASSY,OIL RADIATOR LH	1	
	404-189860-11	. . DUCT ASSY,OIL RADIATOR RH . . . . . /ATTACHING PARTS/	1	
- 76	AN526-8-8	. . SCREW	10	
		----*----		

FIG. & INDEX NO.	PART NO.	DESCRIPTION 1 2 3 4 5 6 7	UNITS PER ASSY	USABLE ON CODE
13	189214L	SHROUD INSTL,EXHAUST TAIL PIPE REAR LH. . . . . /SEE FIG. 1 FOR NHA/	1	
	189214R	SHROUD INSTL,EXHAUST TAIL PIPE REAR RH. . . . . /SEE FIG. 1 FOR NHA/	1	
- 77	189214-14L	. SHROUD,EXHAUST TAIL PIPE REAR LH.	1	
	189214-14R	. SHROUD,EXHAUST TAIL PIPE REAR RH.	1	
- 78	189567L	. SECTION ASSY,FIREWALL REMOVABLE LH.	1	
	189567R	. SECTION ASSY,FIREWALL REMOVABLE RH. . . . . /ATTACHING PARTS/	1	
- 79	AN526-832-8	. SCREW	12	
- 80	AN526-8-6	. SCREW	2	
	AN365-832	. NUT . . . . . ----*----	2	

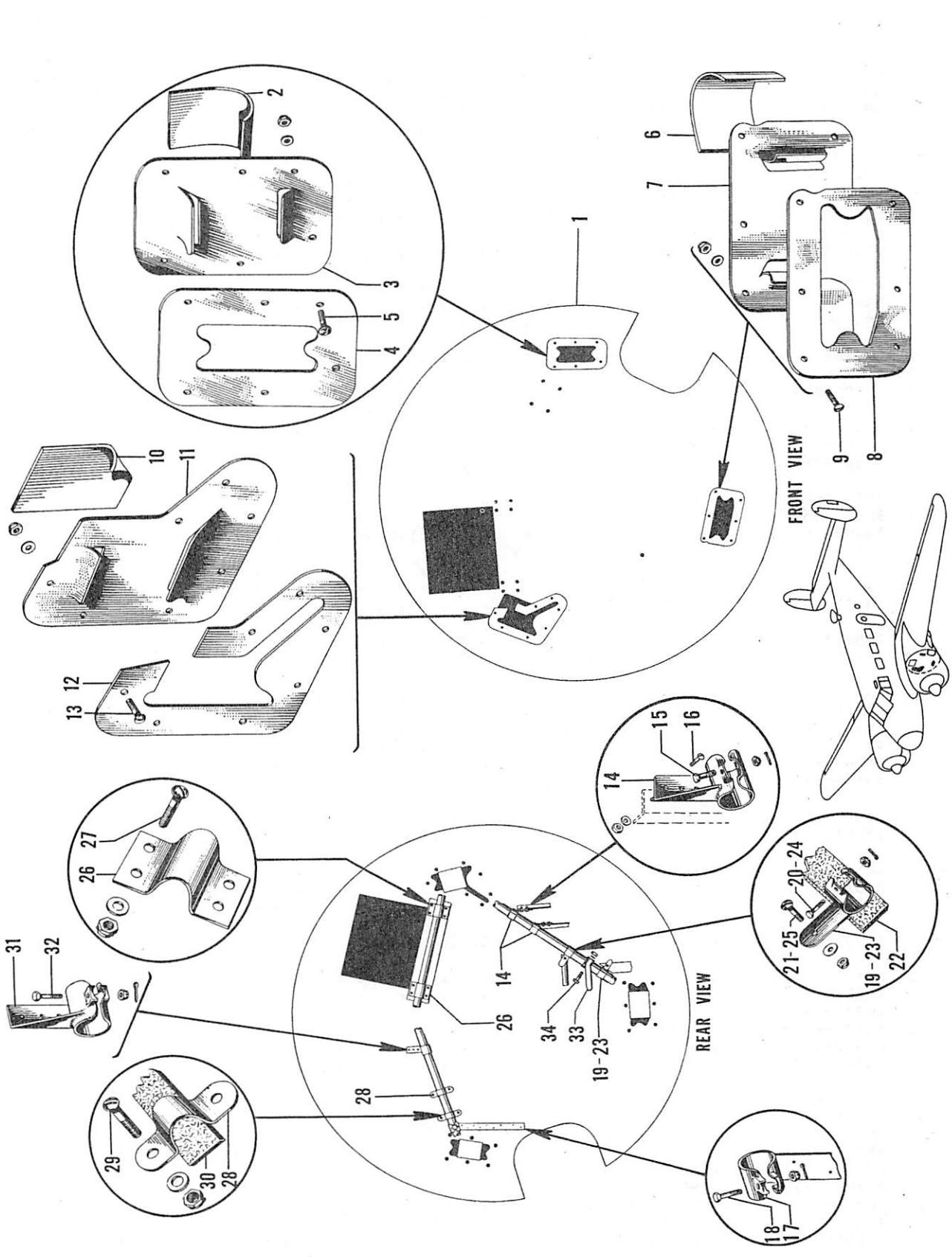

Figure 14. LH & RH Firewall Installation

FIG. & INDEX NO.	PART NO.	DESCRIPTION 1 2 3 4 5 6 7	UNITS PER ASSY	USABLE ON CODE
14	694-189300	FIREWALL INSTL,LH /SEE FIG. 1 FOR NHA/	1	A-1,B
	694-189300-2	FIREWALL INSTL,LH /SEE FIG. 1 FOR NHA/	1	A-2
	694-189300-1	FIREWALL INSTL,RH /SEE FIG. 1 FOR NHA/	1	A-1,B
	694-189300-3	FIREWALL INSTL,RH /SEE FIG. 1 FOR NHA/	1	A-2
- 1	694-189502	. FIREWALL ASSY,NACELLE LH /SEE FIG. 15/	1	A-1,B
	694-189503-1	. FIREWALL ASSY,NACELLE LH /SEE FIG. 15/	1	A-2
	694-189502-1	. FIREWALL ASSY,NACELLE RH /SEE FIG. 15/	1	A-1,B
	694-189503-2	. FIREWALL ASSY,NACELLE RH /SEE FIG. 15/	1	A-2
- 2	206248-8-0208	. PAD,TRUSS BRACKET	1	
- 3	804-189502	. SEAL,FIREWALL TRUSS OPENING	1	
- 4	18S9502P-1	. PLATE,ENGINE MOUNT CUTOUT REINFORCEMENT /ATTACHING PARTS/	1	
- 5	AN526-632-6	. SCREW	6	
	AN960-6	. WASHER	6	
	AN365-632	. NUT	6	
		----*----		
- 6	204248-8-0304	. PAD,TRUSS BRACKET	1	
- 7	804-189503	. SEAL,FIREWALL TRUSS OPENING	1	
- 8	18S9502P-2	. PLATE,ENGINE MOUNT CUTOUT REINFORCEMENT /ATTACHING PARTS/	1	
- 9	AN526-632-6	. SCREW	6	
	AN960-6	. WASHER	6	
	AN365-632	. NUT	6	
		----*----		
- 10	206248-9-0208	. PAD,TRUSS BRACKET	1	
- 11	804-189504	. SEAL,FIREWALL TRUSS OPENING	1	
- 12	18S9502P-3	. PLATE,ENGINE MOUNT CUTOUT REINFORCEMENT /ATTACHING PARTS/	1	
- 13	AN526-632-6	. SCREW	7	
	AN960-6	. WASHER	7	
	AN365-632	. NUT	7	
		----*----		
- 14	18S9532L	. BRACKET,TORQUE TUBE SUPPORT CHANNEL LH	2	
	18S9532R	. BRACKET,TORQUE TUBE SUPPORT CHANNEL RH /ATTACHING PARTS/	2	
- 15	AN3-7	. BOLT	2	
	AN310-3	. NUT	2	
	AN380-2-2	. PIN,COTTER	2	
- 16	AN515-8-7	. SCREW	4	
	AN960-8	. WASHER	4	
	AN365-832	. NUT	4	
		----*----		
- 17	189519L	. BRACE ASSY,NACELLE FIREWALL OUTBD LH	1	
	189519R	. BRACE ASSY,NACELLE FIREWALL OUTBD RH /ATTACHING PARTS/	1	
- 18	AN4-10	. BOLT	1	
	AN310-4	. NUT	1	
	AN380-2-2	. PIN,COTTER	1	
		----*----		
- 19	18S9518	. BRACKET,FIREWALL TRUSS CONNECTION /LH ONLY/ /ATTACHING PARTS/	2	
- 20	AN3-7	. BOLT	1	
	AN310-3	. NUT	1	
	AN380-2-2	. PIN,COTTER	1	
- 21	AN526-832-8	. SCREW	1	
	AN960-8	. WASHER	1	
	AN365-832	. NUT	1	
		----*----		
- 22	206248-7-1800	. PAD,TRUSS BRACKET	1	
- 23	18S9518	. BRACKET,FIREWALL TRUSS CONNECTING /RH ONLY/ /ATTACHING PARTS/	1	
- 24	AN3-7	. BOLT	1	
	AN310-3	. NUT	1	
	AN380-2-2	. PIN,COTTER	1	
- 25	AN526-8-8	. SCREW	1	
	AN960-8	. WASHER	1	
	AN365-832	. NUT	1	
		----*----		

FIG. & INDEX NO.	PART NO.	DESCRIPTION 1 2 3 4 5 6 7	UNITS PER ASSY	USABLE ON CODE
14 - 26	189516	• CLAMP,OIL RADIATOR FIREWALL • • • • • • • • • /ATTACHING PARTS/	2	
- 27	AN526-1032-8	• SCREW • • • • • • • • • • • • • • • • • • •	4	
	AN960-10	• WASHER• • • • • • • • • • • • • • • • • • •	4	
	AN365-1032	• NUT •	4	
		----*----		
- 28	774-189506	• CLAMP,FIREWALL FUEL MIX INDICATOR /RH ONLY/ • /ATTACHING PARTS/	2	
- 29	AN526-832-7	• SCREW • • • • • • • • • • • • • • • • • • •	2	
	AN960-8	• WASHER• • • • • • • • • • • • • • • • • • •	2	
	AN365-832	• NUT •	2	
		----*----		
- 30	206248-7-0800	• PAD,TRUSS BRACKET • • • • • • • • • • • • •	1	
- 31	181131L	• CLAMP,LG SHOCK CORD BRACKET UPPER LH• • • •	1	
	181131R	• CLAMP,LG SHOCK CORD BRACKET UPPER RH• • • • /ATTACHING PARTS/	1	
- 32	AN4-10	• BOLT• • • • • • • • • • • • • • • • • • • •	1	
	AN310-4	• NUT •	1	
	AN380-2-2	• PIN,COTTER• • • • • • • • • • • • • • • • •	1	
		----*----		
- 33	18S9509P	• BRACKET,FUEL PRESSURE WARNING /RH ONLY/ • • • /ATTACHING PARTS/	1	
- 34	AN3-7	• BOLT• • • • • • • • • • • • • • • • • • • •	1	
	AN310-3	• NUT •	1	
	AN380-2-2	• PIN,COTTER• • • • • • • • • • • • • • • • •	1	
		----*----		

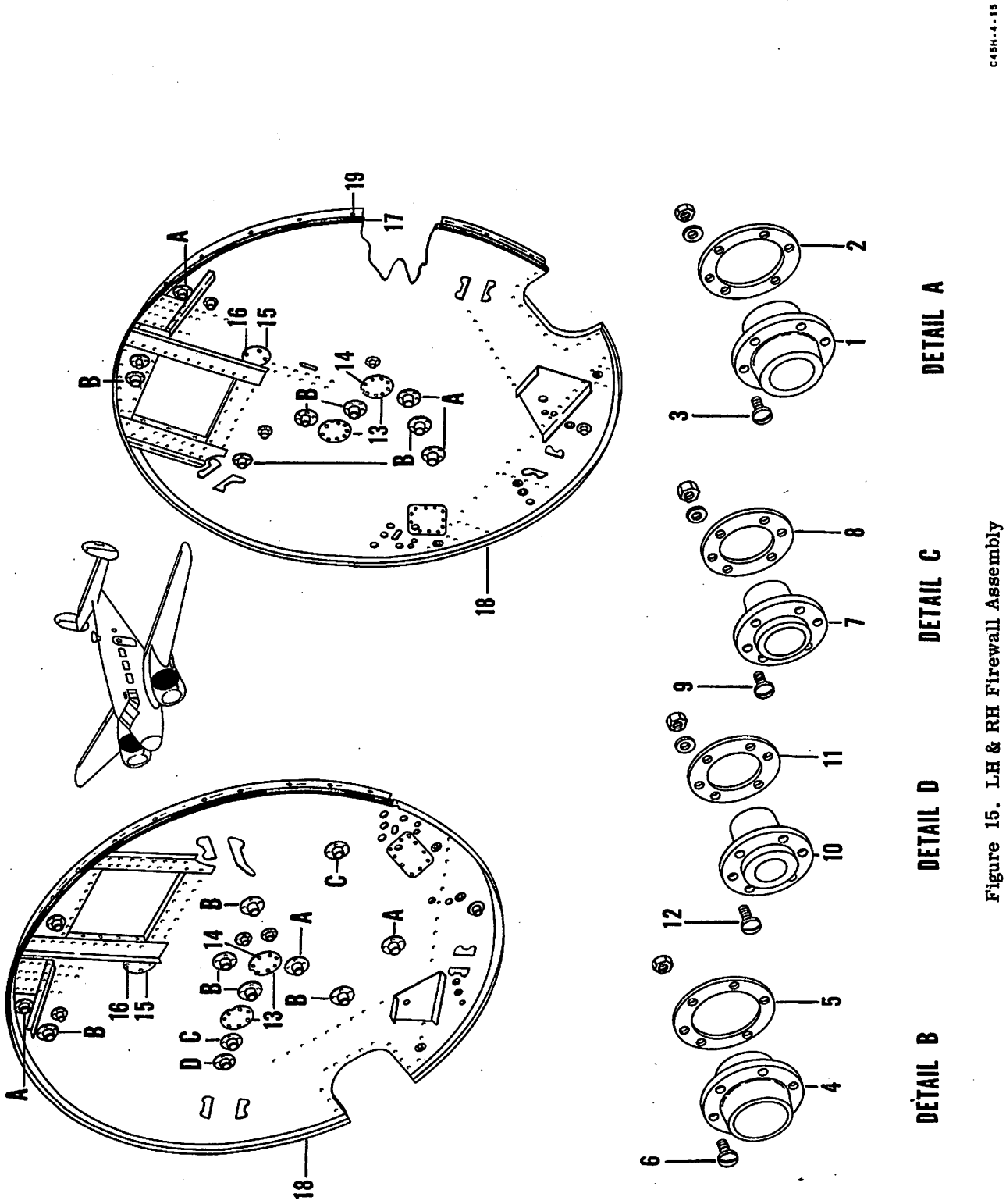

Figure 15. LH & RH Firewall Assembly

FIG. & INDEX NO.	PART NO.	DESCRIPTION 1 2 3 4 5 6 7	UNITS PER ASSY	USABLE ON CODE
15	694-189502	FIREWALL ASSY,NACELLE LH /SEE FIG. 14 FOR NHA/.	REF	A-1,B
	694-189503-1	FIREWALL ASSY,NACELLE LH /SEE FIG. 14 FOR NHA/.	REF	A-2
	694-189502-1	FIREWALL ASSY,NACELLE RH /SEE FIG. 14 FOR NHA/.	REF	A-1,B
	694-189503-2	FIREWALL ASSY,NACELLE RH /SEE FIG. 14 FOR NHA/.	REF	A-2
- 1	203886-2	. FLANGE,FIREWALL CONNECTING.	3	
- 2	106119	. WASHER,FIREWALL REINFORCEMENT /ATTACHING PARTS/	3	
- 3	AN515-8-8	. SCREW	8	
	AN960-8	. WASHER.	8	
	AN365-832	. NUT	8	
- 4	203886-1	. FLANGE,FIREWALL CONNECTING.	5	
- 5	106119	. WASHER,FIREWALL REINFORCEMENT /ATTACHING PARTS/	5	
- 6	AN515-8-8	. SCREW	6	
	AN365-832	. NUT	6	
- 7	203906-1	. FLANGE,FIREWALL CONNECTING.	2	
- 8	106120	. WASHER,FIREWALL REINFORCEMENT /ATTACHING PARTS/	2	
- 9	AN515-8-8	. SCREW	12	
	AN960-8	. WASHER.	12	
	AN365-832	. NUT	12	
- 10	203906-2	. FLANGE,FIREWALL CONNECTING.	1	
- 11	106120	. WASHER,FIREWALL REINFORCEMENT /ATTACHING PARTS/	1	
- 12	AN515-8-8	. SCREW	6	
	AN960-8	. WASHER.	6	
	AN365-832	. NUT	6	
	694-189500	. PARTS INSTL,STANDARD FIREWALL LH.	1	
	694-189500-1	. PARTS INSTL,STANDARD FIREWALL RH.	1	
- 13	804-189501	. . PLATE,FIREWALL MAGNETO INSPECTION /ATTACHING PARTS/	2	
- 14	AN3-3A	. . BOLT.	8	
- 15	189531	. . PLATE,COVER /ATTACHING PARTS/	1	
- 16	AN526-8-6	. . SCREW	2	
- 17	694-189500-12	. . SEAL,FIREWALL STIFFENER	1	
- 18	694-189500-13	. . STIFFENER /ATTACHING PARTS/	1	
- 19	AN526-632-6	. . SCREW	26	
	AN960-6	. . WASHER.	26	
	AN365-632	. . NUT	26	

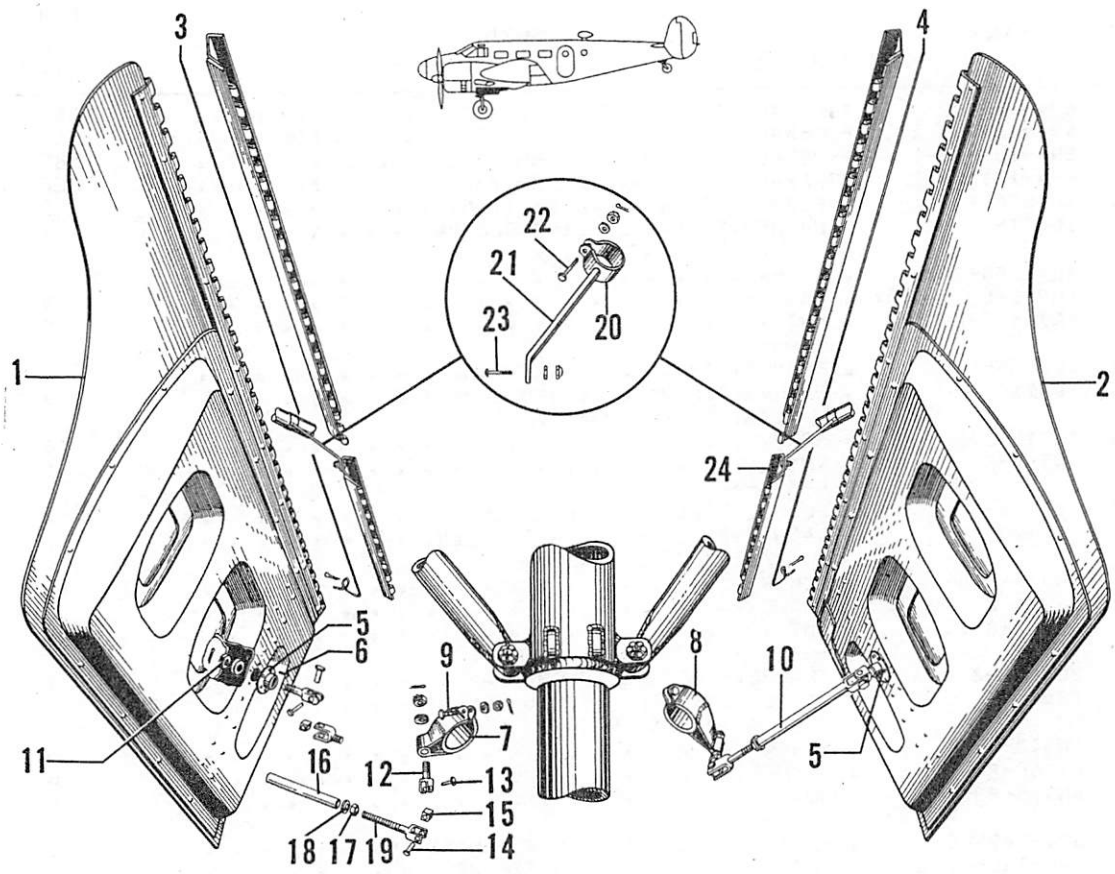

Figure 16. Landing Gear Door Installation

C45H-4-16

FIG. & INDEX NO.	PART NO.	DESCRIPTION 1 2 3 4 5 6 7	UNITS PER ASSY	USABLE ON CODE
16	694-185951	DOOR INSTL,LANDING GEAR LH /SEE FIG. 1 FOR NHA/	1	
	694-185951-1	DOOR INSTL,LANDING GEAR RH /SEE FIG. 1 FOR NHA/	1	
- 1	404-185955	. DOOR ASSY,LANDING GEAR INBD LH.	1	
	404-185955-1	. DOOR ASSY,LANDING GEAR INBD RH.	1	
- 2	804-185954	. DOOR ASSY,LANDING GEAR OUTBD LH	1	A-4,B
	404-185954-1	. DOOR ASSY,LANDING GEAR OUTBD LH	1	A-5
	804-185954-1	. DOOR ASSY,LANDING GEAR OUTBD RH	1	A-4,B
	404-185954-2	. DOOR ASSY,LANDING GEAR OUTBD RH	1	A-5
		/ATTACHING PARTS/		
- 3	804-185958-1	. PIN,HINGE INBD.	1	
- 4	804-185958-2	. PIN,HINGE OUTBD	1	
		----*----		
- 5	804-185962	. BASE,NACELLE DOOR LONG SWIVEL	2	
		/ATTACHING PARTS/		
- 6	AN515-8-8	. SCREW	6	
		----*----		
- 7	694-185950	. SOCKET ASSY,LANDING GEAR DOOR LINK SWIVEL LH.	1	
- 8	694-185950-1	. SOCKET ASSY,LANDING GEAR DOOR LINK SWIVEL RH.	1	
		/ATTACHING PARTS/		
- 9	AN4-7	. BOLT.	1	
	AN960-416	. WASHER.	1	
	AN310-4	. NUT	1	
	AN380-2-2	. PIN,COTTER.	1	
		----*----		

FIG. & INDEX NO.	PART NO.	DESCRIPTION 1 2 3 4 5 6 7	UNITS PER ASSY	USABLE ON CODE
16 - 10	694-185955	LINK ASSY,LANDING GEAR DOOR	1	A-4,B
	694-185953	LINK ASSY,LANDING GEAR DOOR	1	A-5
		/ATTACHING PARTS/		
- 11	AN320-5	NUT	2	
	AN960-516	WASHER	2	
	AN380-2-2	PIN,COTTER	2	
	52-022-094-0437	PIN,ROLL /72962/	2	
		-----*-----		
- 12	694-185956	. . CLEVIS,LANDING GEAR DOOR LINK ATTACHING	2	
- 13	694-185955-2	. . PIN	2	A-4,B
	AN392-23	. . PIN	2	A-5
- 14	694-185955-4	. . PIN	2	A-4,B
	694-185953-3	. . PIN	2	A-5
- 15	694-185960	. . BLOCK,LANDING GEAR DOOR LINK SWIVEL	2	
- 16	694-185959	. . TUBE ASSY,LANDING GEAR DOOR LINK	1	
- 17	AN316-5	. . NUT	1	
- 18	NAS460-516	. . WASHER	1	
- 19	694-185958	. . CLEVIS,LANDING GEAR DOOR LINK ADJUSTABLE	1	
	404-184241	SUPPORT INSTL,NACELLE DOOR LH	1	
	404-184241-1	SUPPORT INSTL,NACELLE DOOR RH	1	
- 20	404-185808	. . BRACE ASSY,DOOR HINGE INBD LH	1	
	404-185808-1	. . BRACE ASSY,DOOR HINGE INBD RH	1	
- 21	404-185807	. . BRACE ASSY,DOOR HINGE OUTBD LH	1	
	404-185807-1	. . BRACE ASSY,DOOR HINGE OUTBD RH	1	
		/ATTACHING PARTS/		
- 22	AN3-11	. . BOLT	1	
- 23	AN3-10	. . BOLT	1	
	AN960-10	. . WASHER	2	
	AN310-3	. . NUT	2	
	AN380-2-2	. . PIN,COTTER	2	
- 24	AN526-632-6	. . SCREW	2	
	AN960-6	. . WASHER	2	
	AN365-632	. . NUT	2	
		-----*-----		

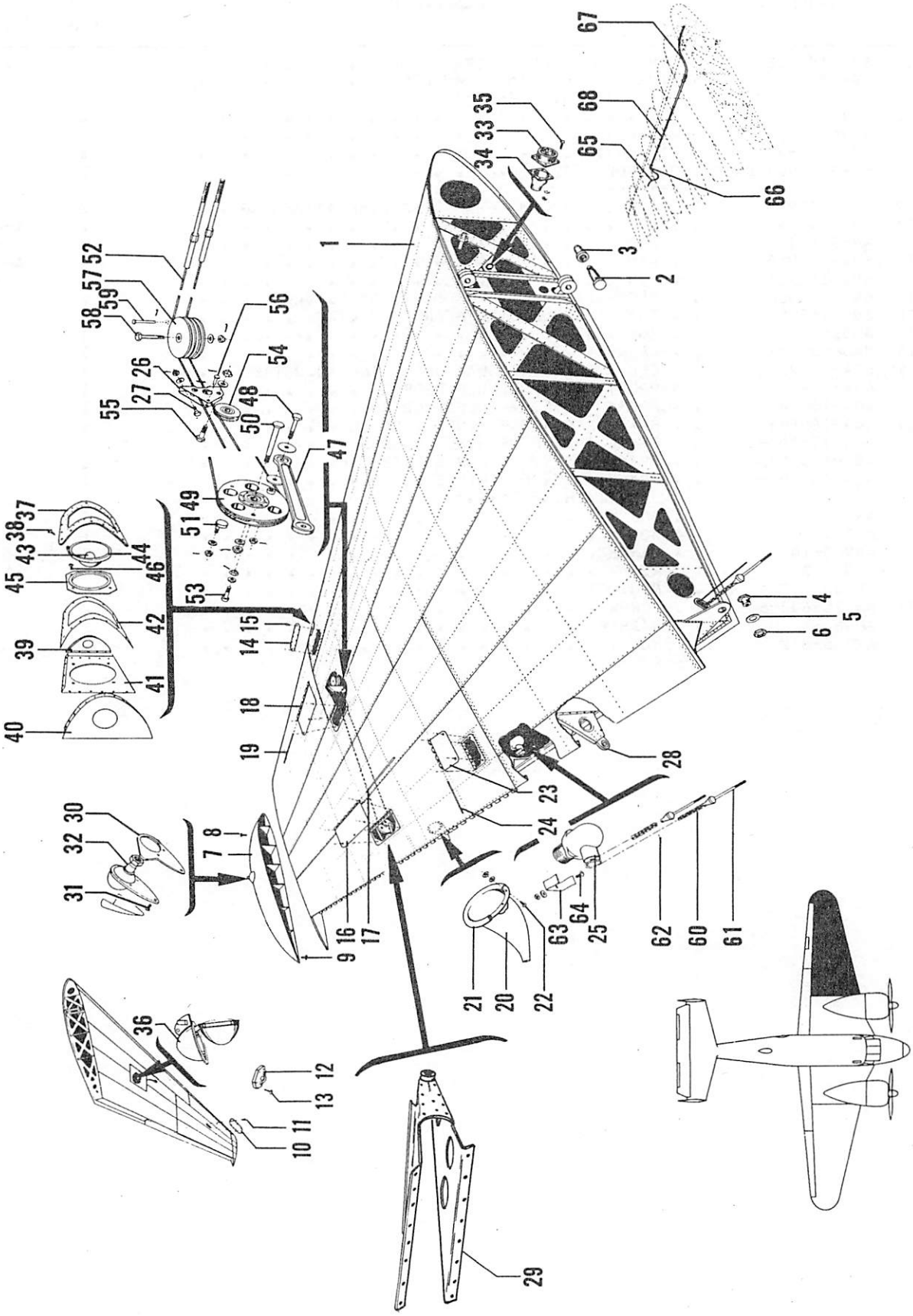

Figure 17. LH Outboard Wing Assembly

FIG. & INDEX NO.	PART NO.	DESCRIPTION 1 2 3 4 5 6 7	UNITS PER ASSY	USABLE ON CODE
17	B18120-600	WING ASSY,OUTBD LH /SEE FIG. 1 FOR NHA/	1	
- 1	B18120L	. WING ASSY,OUTBD	1	
		/ATTACHING PARTS/		
- 2	18206	. BOLT,WING HINGE	2	
- 3	18206-2	. NUT,WING HINGE	2	
- 4	18207-1	. BOLT,REAR WING SPAR HINGE	2	
- 5	18207-3	. WASHER,REAR WING SPAR HINGE	4	
- 6	18207-2	. NUT,REAR WING SPAR HINGE	2	
		----*----		
- 7	18150	. . TIP ASSY,WING	1	
		/ATTACHING PARTS/		
- 8	AN526-832-6	. . SCREW	9	
- 9	AN526-832-7	. . SCREW	51	
		----*----		
- 10	18120-76	. . COVER,INSPECTION DOOR	1	
		/ATTACHING PARTS/		
- 11	AN526-832-7	. . SCREW	12	
		----*----		
- 12	814-180939	. . LUG,TIE DOWN	1	
		/ATTACHING PARTS/		
- 13	AN526-1032-10	. . SCREW	6	
		----*----		
	181280	. . DOOR INSTL,AILERON CABLE INSPECTION	1	
- 14	181280-4	. . . COVER,AILERON CABLE INSPECTION	1	
		/ATTACHING PARTS/		
- 15	AN507-832-10	. . . SCREW	14	
		----*----		
	181250	. . DOOR INSTL,WING INSPECTION REAR	1	
- 16	181252	. . . DOOR ASSY,WING INSPECTION REAR	1	
		/ATTACHING PARTS/		
- 17	105774-C-063-01127	. . . PIN,HINGE	1	
		----*----		
	181260	. . DOOR INSTL,WING INSPECTION FRONT	1	
- 18	181262L	. . . DOOR ASSY,WING INSPECTION FRONT	1	
		/ATTACHING PARTS/		
- 19	105774-C-063-01200	. . . PIN,HINGE	1	
		----*----		
- 20	181218	. . BOOT,AILERON TAB CONTROL	1	
- 21	181217	. . PLATE,AILERON TAB CONTROL BOOT ATTACHING	1	
		/ATTACHING PARTS/		
- 22	AN515-4-4	. . SCREW	8	
	AN960-4	. . WASHER	8	
		----*----		
	181270	. . DOOR INSTL,INSPECTION	1	
- 23	181272	. . . DOOR ASSY,INSPECTION	1	
		/ATTACHING PARTS/		
- 24	105774-C-063-00503	. . . PIN,HINGE	1	
		----*----		
- 25	4707-10	. . DRIVE ASSY,AILERON TAB /08484/	1	
- 26	18734L	. . BRACKET,OUTBD WING PULLEY /DRILL ON INSTL/	1	
		/ATTACHING PARTS/		
- 27	AN3-4	. . BOLT	2	
	108492-S-10-016	. . WASHER	2	
	AN310-3	. . NUT	2	
	AN380-2-2	. . PIN,COTTER	2	
		----*----		
	18162-3	. . HINGE ASSY,FLAP	1	
- 28	181620	. . . BRACKET ASSY,HINGE BEARING	1	
- 29	187304	. . BRACKET ASSY,AILERON BELLCRANK LH	1	
- 30	35-361703	. INDICATOR,WING TIP LIGHT	1	
		/ATTACHING PARTS/		
- 31	AN505-6-7	. SCREW	3	
		----*----		

FIG. & INDEX NO.	PART NO.	DESCRIPTION 1 2 3 4 5 6 7	UNITS PER ASSY	USABLE ON CODE
17	694-180767	• HARNESS ASSY,WING TIP LIGHT	1	
- 32	AN3033-3	• • LIGHT ASSY,WING POSITION	1	
	694-180712	• HARNESS ASSY,OUTBD WING	1	
- 33	AN3106B-10-5S	• • PLUG	1	
	AN3057-10	• • CLAMP	1	
	GK-CL-1/2BN	• • SHELL,/71468/	1	
- 34	GK-C8-32SL	• • RECEPTACLE,/71468/	1	
		/ATTACHING PARTS/		
- 35	AN515-8-10	• • SCREW	4	
	AN960-8	• • WASHER	4	
	AN365-832	• • NUT	4	
		----*----		
- 36	AN3095-9	• LIGHT ASSY,ELECTRICAL RETRACTABLE LANDING	1	
	I181000	• LIGHT INSTL,WING WARNING	1	
- 37	I181000-12	• • COVER ASSY,WING WARNING LIGHT	1	
		/ATTACHING PARTS/		
- 38	AN526-632-7	• • SCREW	14	
		----*----		
- 39	I181000-2	• • RIB,DUMMY NOSE OUTBD	1	
- 40	I181000-4	• • RIB,DUMMY NOSE INBD	1	
- 41	I181172	• • BRACKET ASSY,WING WARNING LIGHT	1	
- 42	I181000-5	• • FRAME,WING WARNING LIGHT COVER INNER	1	
- 43	AN3133-311	• • BULB	1	
- 44	NO NUMBER	• • LAMP ASSY,WARNING LIGHT	1	
		/TYPE B-3 SPECIFICATION AC94-32118/		
- 45	I181000-6	• • BRACKET,WING WARNING LIGHT LAMP	1	
		/ATTACHING PARTS/		
- 46	AN515-6-6	• • SCREW	4	
		----*----		
- 47	18732	• LINK ASSY,AILERON /SEE FIG. 61 FOR NHA/	REF	
		/ATTACHING PARTS/		
- 48	AN4-16/M/	• BOLT	1	
	100951-S-032-008100	• WASHER	2	
	AN960-416	• WASHER	1	
	AN310-4	• NUT	1	
	AN380-2-2	• PIN,COTTER	1	
		----*----		
- 49	187300	• PULLEY ASSY,AILERON BELLCRANK	REF	
		/SEE FIG. 61 FOR NHA/		
		/ATTACHING PARTS/		
- 50	S-165	• BOLT	1	
	AN960-616	• WASHER	1	
	AN310-6	• NUT	1	
	AN380-3-3	• PIN,COTTER	1	
		----*----		
- 51	181786	• STOP,RIB AILERON	1	
		/ATTACHING PARTS/		
	AN960-416	• WASHER	1	
	AN310-4	• NUT	1	
	AN380-2-2	• PIN,COTTER	1	
		----*----		
- 52	404-187030	• CABLE ASSY,AILERON CONTROL	REF	
		/SEE FIG. 61 FOR NHA/		
		/ATTACHING PARTS/		
- 53	187007-2	• BOLT	REF	
	AN960-416	• WASHER	1	
	AN310-4	• NUT	1	
	AN380-2-2	• PIN,COTTER	1	
		----*----		
- 54	187132	• PULLEY,AILERON IDLER /SEE FIG. 61 FOR NHA/	REF	
		/ATTACHING PARTS/		
- 55	AN4-11	• BOLT	1	
	AN960-416	• WASHER	1	
	AN310-4	• NUT	1	
		----*----		

FIG. & INDEX NO.	PART NO.	DESCRIPTION 1 2 3 4 5 6 7	UNITS PER ASSY	USABLE ON CODE
17 - 56	AN392-19	. PIN	1	
	AN380-2-2	. PIN,COTTER.	1	
- 57	AN210-4B	. PULLEY,/SEE FIG. 61 FOR NHA/. . . . . /ATTACHING PARTS/	REF	
- 58	AN4-15/M/	. BOLT.	1	
	AN960-416	. WASHER.	1	
	AN310-4	. NUT	1	
	AN380-2-2	. PIN,COTTER.	1	
		----*----		
- 59	AN392-37	. PIN	1	
	AN380-2-2	. PIN,COTTER.	1	
- 60	407-187106-2	. CHAIN,AILERON TAB CONTROL . . . . . /SEE FIG. 62 FOR NHA/	REF	
- 61	187661	. STOP,AILERON TAB CONTROL/SEE FIG. 62 FOR NHA/	REF	
- 62	102809-A078-014	. PIN,/SEE FIG. 62 FOR NHA/	REF	
- 63	187713-1	. GUARD,CHAIN TAB CONTROL . . . . . /ATTACHING PARTS/	1	
- 64	AN526-632-6	. SCREW	2	
	AN960-6	. WASHER.	2	
	AN365-632	. NUT	2	
		----*----		
- 65	900-189719	TUBE ASSY,DE-ICER OUTBD /SEE FIG. 50 FOR NHA/ .	REF	
- 66	AAF811HT10D	UNION	2	
- 67	900-189717	TUBE ASSY,DE-ICER INBD /SEE FIG. 50 FOR NHA/. .	REF	
	AAF811BT10D	NUT	1	
	AAF811T10CS	SLEEVE.	1	
- 68	900-189718	TUBE ASSY,DE-ICER CENTER /SEE FIG. 50 FOR NHA/.	REF	

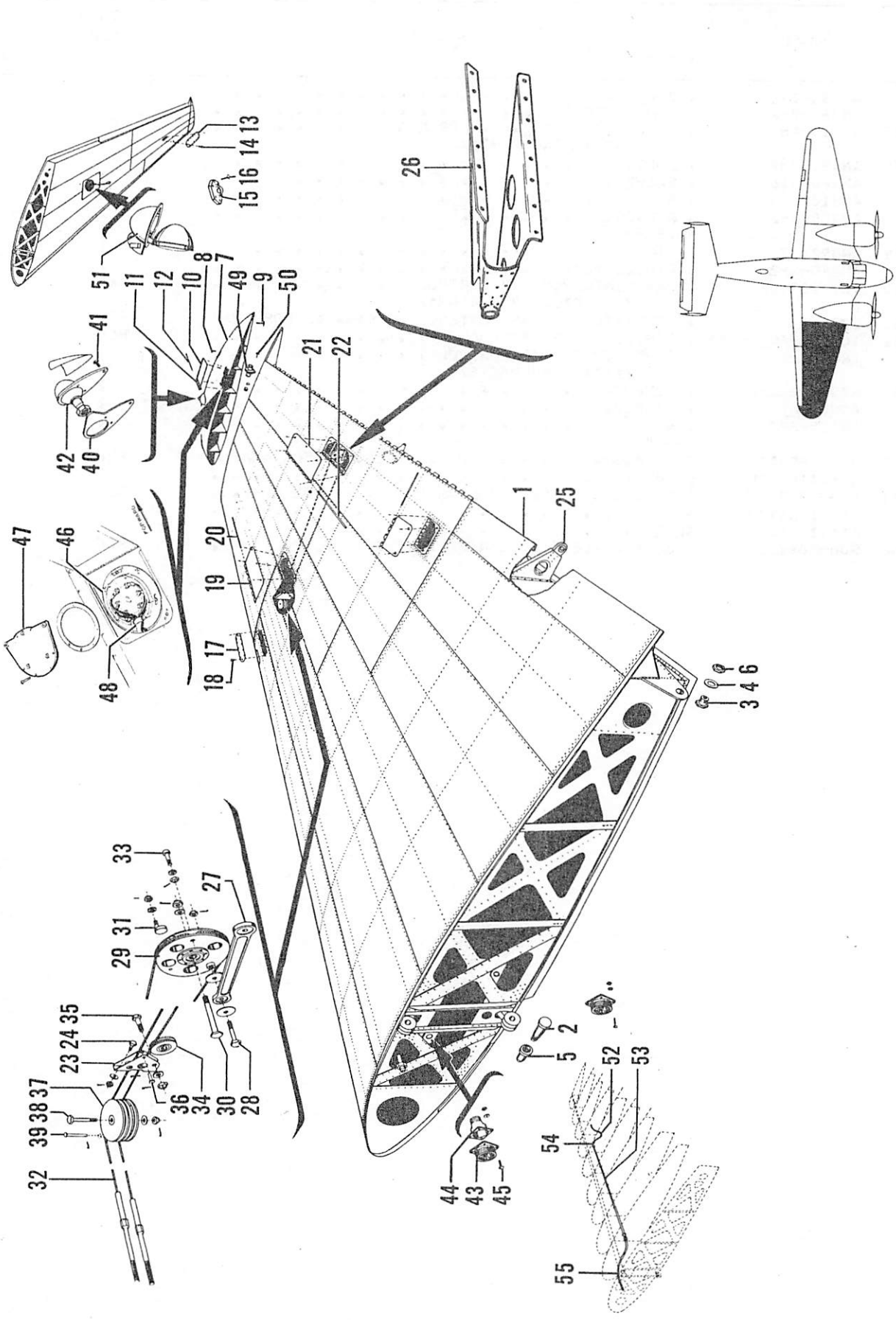

Figure 18. RH Outboard Wing Assembly

FIG. & INDEX NO.	PART NO.	DESCRIPTION 1 2 3 4 5 6 7	UNITS PER ASSY	USABLE ON CODE
18	B18120-601	WING ASSY,OUTBD SECTION RH /SEE FIG. 1 FOR NHA/	1	
- 1	B18120-11	. WING ASSY,OUTBD SECTION	1	
		/ATTACHING PARTS/		
- 2	18206-1	. BOLT,WING HINGE	2	
- 3	18207-1	. BOLT,WING SPAR HINGE REAR	1	
- 4	18207-3	. WASHER,WING SPAR HINGE REAR	2	
- 5	18206-2	. NUT,WING HINGE	2	
- 6	18207-2	. NUT,WING SPAR HINGE REAR	1	
		----*----		
- 7	18150-25	. . TIP ASSY,WING	1	
		/ATTACHING PARTS/		
- 8	AN526-1032-6	. . SCREW	27	
- 9	NO NUMBER	. . SCREW,8-32 X 7/16 TRUSS HEAD	24	
		----*----		
	404-187210-20	. . . DOOR INSTL,FLUX VALVE	1	
- 10	404-187210-12	. . . . DOOR,FLUX VALVE	1	
- 11	404-187210-8	. . . . HINGE,HALF	1	
		/ATTACHING PARTS/		
- 12	105774-C-063-00428	. . . . PIN,HINGE	1	
		----*----		
- 13	18120-76	. . COVER,INSPECTION DOOR	1	
		/ATTACHING PARTS/		
- 14	AN526-1032-8	. . SCREW	12	
		----*----		
- 15	814-180939-1	. . LUG,TIE DOWN	1	
		/ATTACHING PARTS/		
- 16	AN526-1032-10	. . SCREW	6	
		----*----		
	181280	. . DOOR INSTL,AILERON CABLE INSPECTION	1	
- 17	181280-1	. . . COVER	1	
		/ATTACHING PARTS/		
- 18	AN507-832-10	. . . SCREW	14	
		----*----		
	181260	. . DOOR INSTL,WING INSPECTION FRONT	1	
- 19	181262	. . . DOOR ASSY,WING INSPECTION FRONT	1	
		/ATTACHING PARTS/		
- 20	105774-C-063-01200	. . . PIN,HINGE	1	
		----*----		
	181250	. . DOOR INSTL,WING INSPECTION REAR	1	
- 21	181252	. . . DOOR ASSY,WING INSPECTION REAR	1	
		/ATTACHING PARTS/		
- 22	105774-C-063-01127	. . . PIN,HINGE	1	
		----*----		
- 23	18734R	. . BRACKET,WING PULLEY OUTBD /DRILL ON INSTL/	1	
		/ATTACHING PARTS/		
- 24	AN3-4	. . BOLT	2	
	108492-S-10-016	. . WASHER	2	
	AN310-3	. . NUT	2	
	AN380-2-2	. . PIN,COTTER	2	
		----*----		
	18162-3	. . HINGE ASSY,FLAP	1	
- 25	181620	. . . BRACKET ASSY,HINGE BEARING	1	
- 26	187304-1	. . BRACKET ASSY,AILERON BELLCRANK RH	1	
- 27	18732	. LINK ASSY,AILERON	1	
		/ATTACHING PARTS/		
- 28	AN4-16/M/	. BOLT	1	
	100951-S-032-008100	. WASHER	2	
	AN960-416	. WASHER	1	
	AN310-4	. NUT	1	
	AN380-2-2	. PIN,COTTER	1	
		----*----		

FIG. & INDEX NO.	PART NO.	DESCRIPTION 1 2 3 4 5 6 7	UNITS PER ASSY	USABLE ON CODE
18 - 29	187300-1	. PULLEY ASSY,AILERON BELLCRANK . . . . . /SEE FIG. 61 FOR NHA/ /ATTACHING PARTS/	REF	
- 30	S-165/M/	. BOLT.	1	
	AN960-616	. WASHER.	1	
	AN310-6	. NUT	1	
	AN380-3-3	. PIN,COTTER.	1	
		----*----		
- 31	181786	. STOP,RIB AILERON. . . . . /ATTACHING PARTS/	1	
	AN960-416	. WASHER.	1	
	AN310-4	. NUT	1	
	AN380-2-2	. PIN,COTTER.	1	
		----*----		
- 32	404-187030-2	. CABLE ASSY,AILERON OUTBD. . . . . /ATTACHING PARTS/	1	
- 33	187007-2	. BOLT.	1	
	AN960-416	. WASHER.	1	
	AN310-4	. NUT	1	
	AN380-2-2	. PIN,COTTER.	1	
		----*----		
- 34	187132	. PULLEY,AILERON IDLER. . . . . /ATTACHING PARTS/	1	
- 35	AN4-11	. BOLT.	1	
	AN960-416	. WASHER.	1	
	AN310-4	. NUT	1	
		----*----		
- 36	AN392-19	. PIN	1	
	AN380-2-2	. PIN,COTTER.	1	
- 37	AN210-4	. PULLEY. . . . . /ATTACHING PARTS/	2	
- 38	AN4-15/M/	. BOLT.	1	
	AN960-416	. WASHER.	1	
	AN310-4	. NUT	1	
		----*----		
- 39	AN392-37	. PIN	1	
	AN380-2-1	. PIN,COTTER.	1	
- 40	35-361703-1	. INDICATOR,WING TIP. . . . . /ATTACHING PARTS/	1	
- 41	AN505-6-7	. SCREW	3	
		----*----		
	694-180766	. HARNESS ASSY,RIGHT WING TIP LIGHT	1	
- 42	AN3033-4	. . LIGHT ASSY,WING POSITION.	1	
	694-180713	. HARNESS ASSY,OUTBD WING	1	
- 43	AN3106B-18-5S	. . PLUG.	1	
	AN3057-10	. . ADAPTER	1	
	GK-CL-1/2BN	. . SHELL,/71468/	1	
- 44	GK-C-8-32SL	. . RECEPTACLE,/71468/. . . . . /ATTACHING PARTS/	1	
- 45	AN515-8-10	. . SCREW	4	
	AN960-8	. . WASHER.	4	
	AN365-832	. . NUT	4	
		----*----		
- 46	664543	. TRANSMITTER,/TYPE C-2/ /USE AFTER T.O. 1C-45 511 HAS BEEN COMPLIED WITH/ /GFAE/	1	
- 47	656767	. COMPENSATOR,/SPECIFICATION 27635/ . . . . . /USE AFTER T.O. 1C-45-511 HAS BEEN COMPLIED WITH/ /GFAE/	1	
- 48	694-180727	. HARNESS ASSY,REMOTE COMPASS TRANSMITTER . . . /TYPE C-2/	1	
	AN3057-8	. . ADAPTER	1	
- 49	AN3100A-16S-1P	. . RECEPTACLE. . . . . /ATTACHING PARTS/	1	
- 50	AN515-4-5	. . SCREW	4	
	AN365-440	. . NUT	4	
		----*----		

FIG. & INDEX NO.	PART NO.	DESCRIPTION 1 2 3 4 5 6 7	UNITS PER ASSY	USABLE ON CODE
18 - 51	AN3095-9	• LIGHT ASSY,ELECTRICAL RETRACTABLE LANDING • •	1	
- 52	84-189569	TUBE ASSY,DE-ICER OUTBD /SEE FIG. 50 FOR NHA/ •	REF	
- 53	900-189717	TUBE ASSY,DE-ICER CENTER /SEE FIG. 50 FOR NHA/•	REF	
- 54	AAF811HT10D	UNION •	2	
	AAF811BT10D	NUT •	1	
	AAF811T10CS	SLEEVE• •	1	
- 55	900-189718	TUBE ASSY,DE-ICER INBD /SEE FIG. 50 FOR NHA/• •	REF	

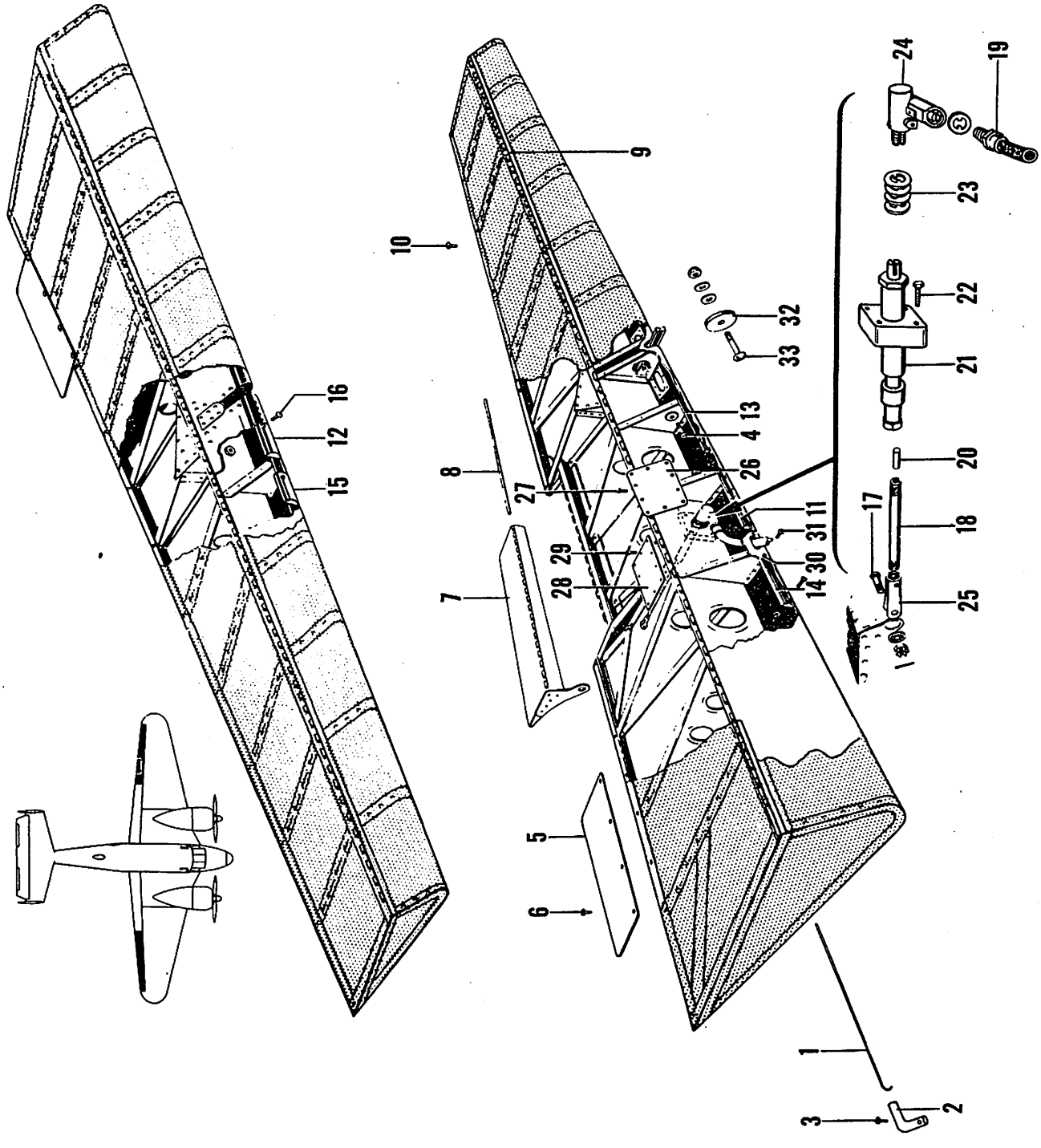

Figure 19. LH & RH Aileron Assembly

FIG. & INDEX NO.	PART NO.	DESCRIPTION 1 2 3 4 5 6 7	UNITS PER ASSY	USABLE ON CODE
19	181350-4	AILERON ASSY,COVERED LH /SEE FIG. 1 FOR NHA/	1	
	181350-5	AILERON ASSY,COVERED RH /SEE FIG. 1 FOR NHA/	1	
		/ATTACHING PARTS/		
- 1	B181000-1	PIN,HINGE	1	
- 2	18122	SAFETY,AILERON HINGE PIN	1	
- 3	AN526-632-5	SCREW	1	
- 4	AN4-13/M/	BOLT	1	
	AN960-416	WASHER	2	
	AN310-4	NUT	1	
	AN380-2-2	PIN,COTTER	1	
		-----*-----		
- 5	181352	. TAB,STATIONARY AILERON	1	A-6,B-2
		/ATTACHING PARTS/		
- 6	AN526-632-6	. SCREW	4	
		-----*-----		
- 7	181313	. TAB ASSY,AILERON /LH ONLY/	1	
		/ATTACHING PARTS/		
- 8	105774-C-085-03100	. PIN,AILERON TAB	1	
		-----*-----		
- 9	181299	. STRIP,AILERON FABRIC HOLD DOWN LH	1	
		/DRILL ON INSTL/		
	181299-1	. STRIP,AILERON FABRIC HOLD DOWN RH	1	
		/DRILL ON INSTL/		
		/ATTACHING PARTS/		
- 10	AN505-6R6	. SCREW	15	
		-----*-----		
	18130L	. AILERON ASSY,LH	1	
	18130R	. AILERON ASSY,RH	1	
- 11	181308-1	. . LEAD,BALANCING /LH ONLY/	2	
- 12	181308-2	. . LEAD,BALANCING	2	
- 13	181308-3	. . LEAD,BALANCING /LH ONLY/	2	
- 14	181308-4	. . LEAD,BALANCING /LH ONLY/	2	
- 15	181308-6	. . LEAD,BALANCING /RH ONLY/	4	
		/ATTACHING PARTS/		
- 16	AN526-632-10	. . SCREW	AR	
	AN365-1032	. . NUT	AR	
		-----*-----		
	187745	. . CONTROL INSTL,AILERON TAB /LH ONLY/	1	
		/ATTACHING PARTS/		
- 17	S-124-16	. . BOLT	1	
	AN960-10	. . WASHER	1	
	AN320-3	. . NUT	1	
	AN380-2-2	. . PIN,COTTER	1	
		-----*-----		
- 18	187746	. . . ROD,AILERON TAB CONTROL	1	
- 19	187747	. . . CASE ASSY,AILERON TAB CONTROL	1	
- 20	187811	. . . PLUG,AILERON TAB CONTROL	1	
- 21	4576-36-10	. . . ACTUATOR ASSY,TAB CONTROL /08484/	1	
		/ATTACHING PARTS/		
- 22	AN3-11A	. . . BOLT	4	
	AN960-10	. . . WASHER	4	
	AN365-428	. . . NUT	4	
		-----*-----		
- 23	4718-1-3	. . . WASHER,/08484/	AR	
- 24	4584-11-20	. . . DRIVE ASSY,90 DEGREE /08484/	1	
- 25	S-168	. . END,ROD /LH ONLY/	1	
- 26	181304	. DOOR,AILERON TAB INSPECTION /LH ONLY/	1	
		/ATTACHING PARTS/		
- 27	AN526-637-7	. SCREW	10	
		-----*-----		
- 28	181323	. DOOR,AILERON TAB INSPECTION /LH ONLY/	1	
		/ATTACHING PARTS/		
- 29	AN526-632-7	. SCREW	6	
		-----*-----		

FIG. & INDEX NO.	PART NO.	DESCRIPTION 1 2 3 4 5 6 7	UNITS PER ASSY	USABLE ON CODE
19 - 30	187669	• FAIRLEAD,AILERON TAB CONTROL,FLEXIBLE SHAFT • /ATTACHING PARTS/	1	
- 31	AN526-632-8	• SCREW • • •

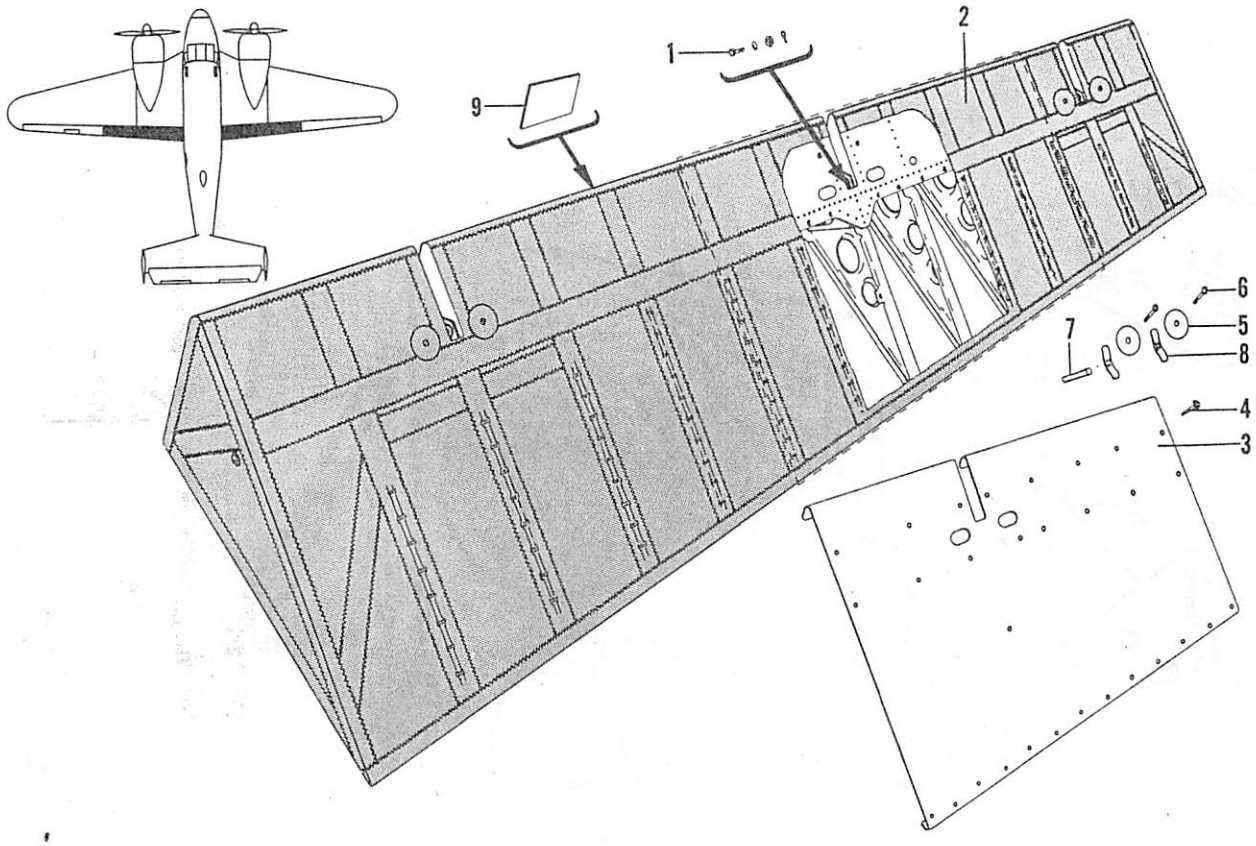

Figure 20. Covered Flap Assembly

C45H-4-20

FIG. & INDEX NO.	PART NO.	DESCRIPTION 1 2 3 4 5 6 7	UNITS PER ASSY	USABLE ON CODE
20	181650	FLAP ASSY,COVERED LH /SEE FIG. 1 FOR NHA/	1	
	181650-1	FLAP ASSY,COVERED RH /SEE FIG. 1 FOR NHA/	1	
		/ATTACHING PARTS/		
- 1	AN4-13/M/	BOLT	3	
	AN960-416	WASHER	3	
	AN310-4	NUT	3	
	AN380-2-2	PIN,COTTER	3	
		----*----		
- 2	18160L	. FRAME ASSY,FLAP LH	1	
	18160R	. FRAME ASSY,FLAP RH	1	
- 3	181657	. PLATE ASSY,FLAP PROTECTOR BOTTOM LH	1	
	181657-1	. PLATE ASSY,FLAP PROTECTOR BOTTOM RH	1	
		/ATTACHING PARTS/		
- 4	AN515-6-6	. SCREW	39	
	AN960-6	. WASHER	39	
		----*----		
	181659	. COVER ASSY,FLAP INSPECTION HOLE	1	
- 5	181658	. . COVER,FLAP INSPECTION HOLE	1	
		/ATTACHING PARTS/		
- 6	AN530-8-16	. . SCREW	1	
- 7	100801-X2-0125	. . BUSHING	1	
- 8	109629	. . NUT,SPRING	1	
		----*----		
- 9	181651	. SPACER,FLAP BUMPER	AR	

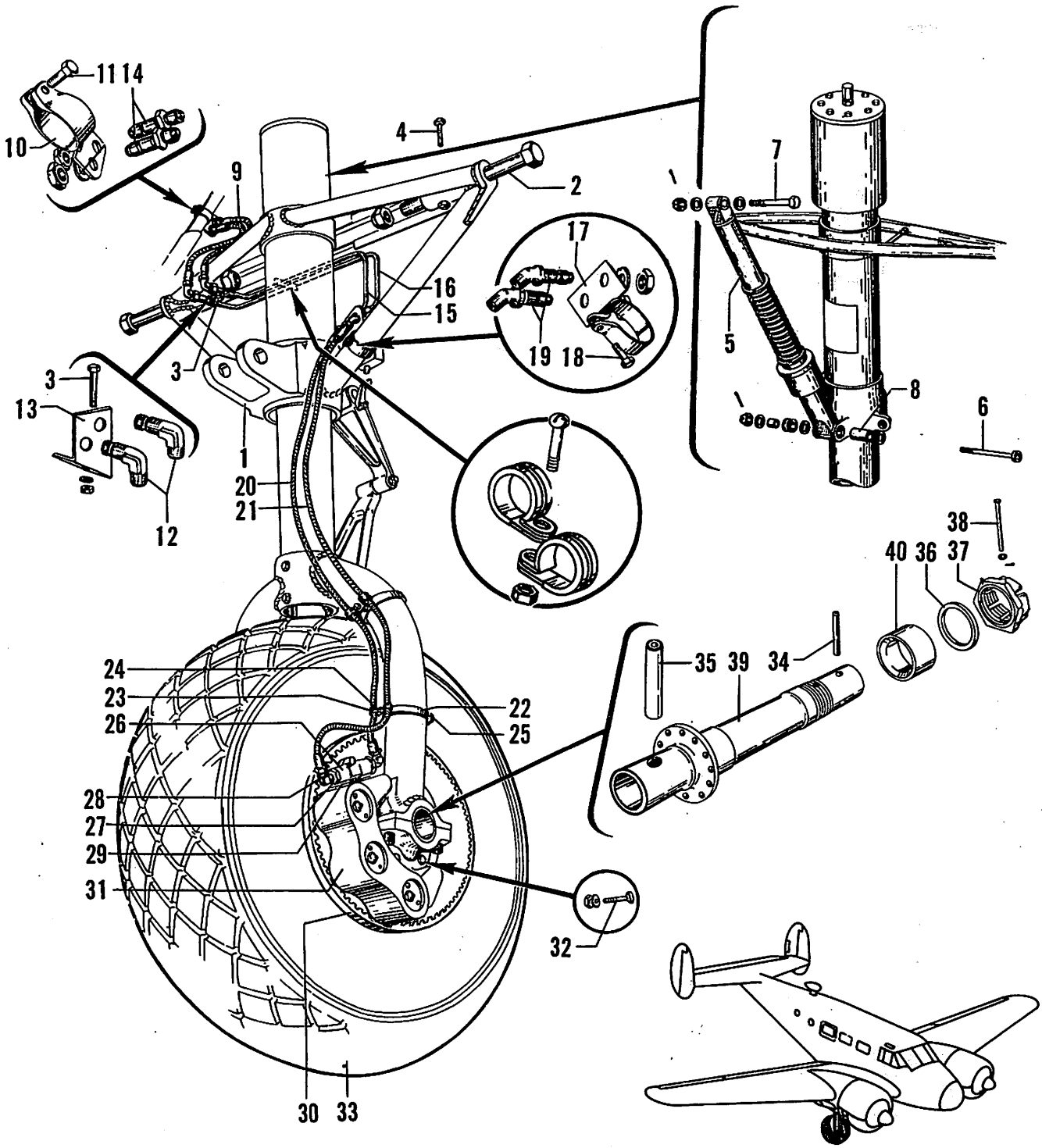

Figure 21. Landing Gear Installation (Sheet 1 of 2 Sheets)

C45H-4-21-1

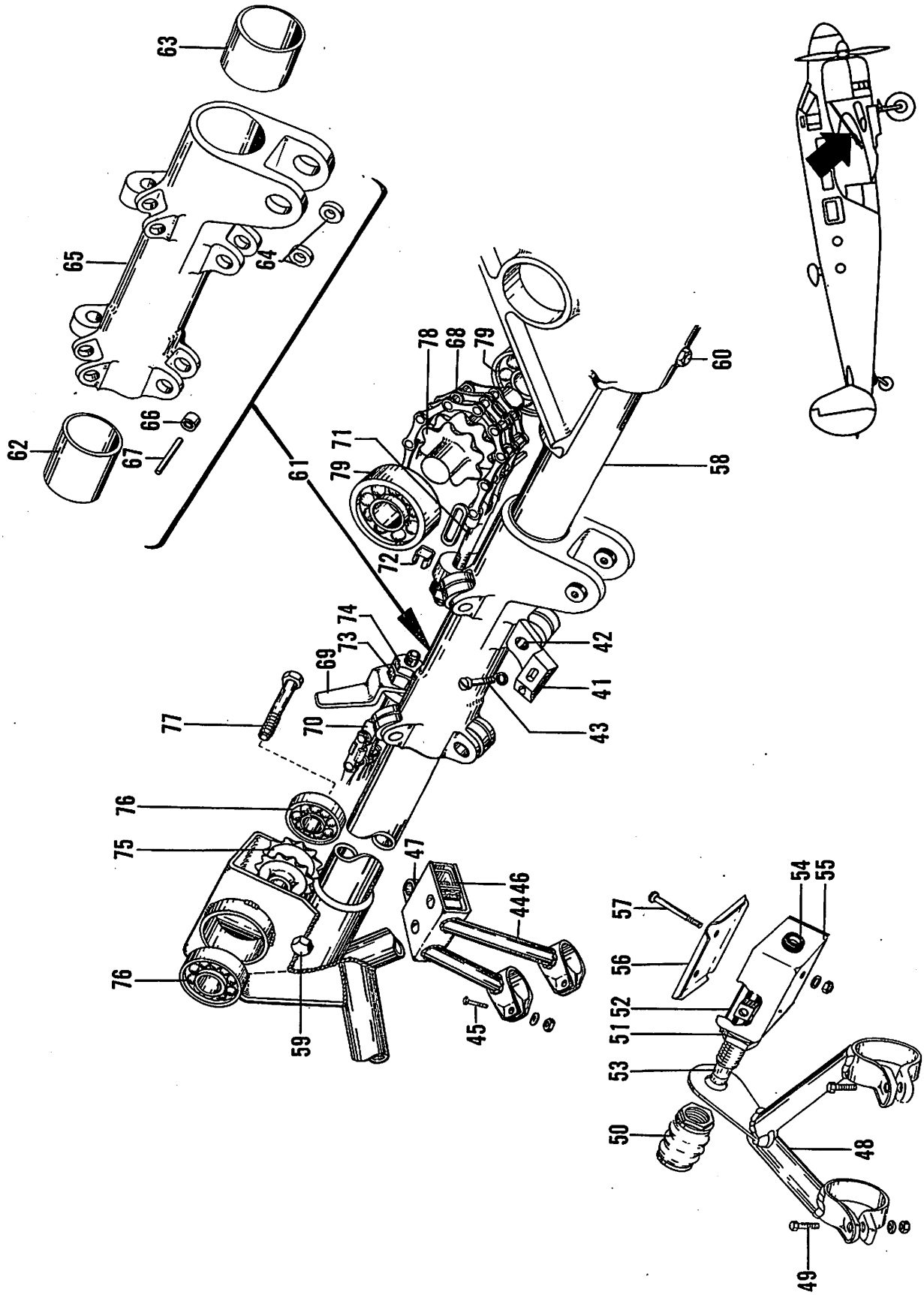

Figure 21. Landing Gear Installation (Sheet 2 of 2 Sheets)

FIG. & INDEX NO.	PART NO.	DESCRIPTION 1 2 3 4 5 6 7	UNITS PER ASSY	USABLE ON CODE
21	694-188000	GEAR INSTL,OLEO DRAG LEG LANDING LH . . . . . /SEE FIG. 1 FOR NHA/	1	
	694-188000-1	GEAR INSTL,OLEO DRAG LEG LANDING RH . . . . . /SEE FIG. 1 FOR NHA/	1	
- 1	404-188400	. ABSORBER ASSY,LANDING GEAR SHOCK LH . . . . . /SEE FIG. 23/	1	
	404-188400-3	. ABSORBER ASSY,LANDING GEAR SHOCK RH . . . . . /SEE FIG. 23/ /ATTACHING PARTS/	1	
- 2	404-188150	. BOLT,LANDING GEAR HINGE	2	
	AN364-1216	. NUT	2	
- 3	AN4-16	. BOLT.	1	
- 4	AN4-21	. BOLT.	1	
	AN960-416	. WASHER.	5	
	AN310-4	. NUT	2	
	AN380-2-2	. PIN,COTTER. . . . . ----*----	2	
- 5	404-188027	. LEG ASSY,LANDING GEAR DRAG /SEE FIG. 22/. . . /ATTACHING PARTS/	1	
- 6	NAS148A71	. BOLT.	1	
	NAS143-9	. WASHER.	1	
	AN960-916	. WASHER.	1	
	AN310-9	. NUT	1	
	AN380-4-4	. PIN,COTTER.	1	
- 7	894-188466	. BOLT,LANDING GEAR LEG	1	
	AN320-9	. NUT	1	
	AN381-4-20	. PIN . . . . . ----*----	1	
- 8	404-188444	. BUSHING,LANDING GEAR REAR LEG LOWER	1	
- 9	AN6264-4-14	. HOSE ASSY	2	
- 10	404-188483	. CLAMP ASSY,BRAKE HOSE LH.	1	
	404-188483-1	. CLAMP ASSY,BRAKE HOSE RH. . . . . /ATTACHING PARTS/	1	
- 11	AN4-7A	. BOLT.	1	
	AN960-416	. WASHER.	1	
	AN365-428	. NUT . . . . . ----*----	1	
- 12	AN833-40	. ELBOW,BULKHEAD.	2	
	AN960A716	. WASHER.	4	
	AN924-4D	. NUT,FITTING	2	
- 13	694-188484-1	. BRACKET,LANDING GEAR BRAKE HOSE LH.	1	
	694-188484-2	. BRACKET,LANDING GEAR BRAKE HOSE RH.	1	
- 14	AN832-4D	. UNION	2	
- 15	404-187897	. TUBE ASSY,BRAKE LH.	1	
	404-187899	. TUBE ASSY,BRAKE RH.	1	
- 16	694-187898	. TUBE ASSY,BRAKE LH.	1	
	694-187899	. TUBE ASSY,BRAKE RH.	1	
- 17	404-188482	. CLAMP ASSY,LANDING GEAR V-BRACE HOSE/RH ONLY/ /ATTACHING PARTS/	1	
- 18	AN4-7A	. BOLT.	1	
	AN960-416	. WASHER.	1	
	AN365-428	. NUT . . . . . ----*----	1	
- 19	AN837-4D	. ELBOW,45 DEGREE /RH ONLY/	2	
	AN960-716	. WASHER.	2	
	AN924-4D	. NUT	2	
- 20	AN6264-4-32-3/4	. HOSE ASSY,COPILOTS BRAKE.	1	
- 21	AN6264-4-37-1/2	. HOSE ASSY,PILOTS BRAKE.	1	
- 22	404-188481	. CLAMP ASSY,LANDING GEAR BRAKE HOSE.	2	
- 23	AN742D10C	. CLAMP . . . . . /ATTACHING PARTS/	2	
- 24	AN501A10-8	. SCREW	2	
- 25	AN4-7A	. BOLT.	2	
	AN960-416	. WASHER.	2	
	AN365-428	. NUT . . . . . ----*----	2	

FIG. & INDEX NO.	PART NO.	DESCRIPTION 1 2 3 4 5 6 7	UNITS PER ASSY	USABLE ON CODE
21 - 26	A-22	. VALVE,SHUTTLE /74465/	1	A-7,B
	A-42	. VALVE,SHUTTLE /74465/	1	A-8
- 27	AN902-8	. GASKET.	1	
	AN924-8D	. NUT	1	
- 28	AN822-4D	. ELBOW,90 DEGREE	2	
- 29	AN902-4	. GASKET.	1	
- 30	530884M	. WHEEL ASSY,/73842/ /GFAE/	1	A-3B-4,A-10
	530884G	. WHEEL ASSY,/73842/ /GFAE/	1	B-3,A-9
- 31	530886M	. BRAKE ASSY,/73842/ /GFAE/	1	A-3B-4,A-10
	530886SG	. BRAKE ASSY,/73842/ /GFAE/ . . . . . /ATTACHING PARTS/	1	B-3,A-9
- 32	AN5-11A	. BOLT.	12	
	AN960-516	. WASHER.	12	
	AN365-524	. NUT	12	
- 33	NO NUMBER	. TIRE,11.00 X 12 - 8 PLY /73842/ /GFAE/. . . .	1	
	11.00 X 12	. TUBE,/73842/ /GFAE/	1	
- 34	404-188443	. PIN,LANDING GEAR AXLE TORQUE INBD	1	
- 35	404-188422	. PIN,LANDING GEAR AXLE TORQUE OUTBD.	1	
- 36	404-188424	. WASHER,LANDING GEAR AXLE.	1	
- 37	AN7502-39	. NUT,LANDING GEAR AXLE . . . . . /ATTACHING PARTS/	1	
- 38	AN393-93	. PIN	1	
	AN960-10L	. WASHER.	1	
	AN380-2-2	. PIN,COTTER.	1	
- 39	404-188427	. AXLE,LANDING GEAR	1	
- 40	404-188425	. COLLAR,LANDING GEAR AXLE.	1	
- 41	404-188024	. ACTUATOR,LIMIT & LIGHT SWITCH UPPER	1	
- 42	404-188025	. BRACKET,LIGHT & LIMIT SW ACTUATOR UPPER LH. .	1	
	404-188025-1	. BRACKET,LIGHT & LIMIT SW ACTUATOR UPPER RH. . /ATTACHING PARTS/	1	
- 43	AN503-8-6	. SCREW	2	
	AN960-8L	. WASHER.	2	
- 44	404-188022	. BRACKET ASSY,LIGHT & LIMIT SWITCH UPPER LH. .	1	
	404-188022-1	. BRACKET ASSY,LIGHT AND LIMIT SWITCH UPPER RH. /ATTACHING PARTS/	1	
- 45	AN3-7	. BOLT.	2	
	AN960-10	. WASHER.	2	
	AN310-3	. NUT	2	
	AN380-2-2	. PIN,COTTER.	2	
- 46	DT-2R-A7	. SWITCH,MICRO LH /40228/	1	
	AN3210-1	. SWITCH,RH	1	
- 47	ADD3721R	. ACTUATOR,LH /40228/	1	
	AD5721R	. ACTUATOR,RH /40228/	1	
- 48	188022	. BRACKET ASSY,LIGHT & LIMIT SWITCH LOWER LH. .	1	
	188022-1	. BRACKET ASSY,LIGHT & LIMIT SWITCH LOWER RH. . /ATTACHING PARTS/	1	
- 49	AN3-7	. BOLT.	2	
	AN960-10	. WASHER.	2	
	AN310-3	. NUT	2	
	AN380-2-2	. PIN,COTTER.	2	
- 50	894-180787	. BOOT ASSY,LIMIT SWITCH.	1	
- 51	10-10377	. NUT,/40228/	1	
- 52	DT-2R-A7	. SWITCH,MICRO LH /40228/	1	
	AN3210-1	. SWITCH,RH	1	
- 53	MCD7711	. ACTUATOR,LH /40228/	1	
	AN3167-1	. ACTUATOR,RH	1	
- 54	AN931-7-11	. GROMMET	1	
- 55	188023	. BOX,LIMIT SWITCH LOWER LH	1	
	188023-1	. BOX,LIMIT SWITCH LOWER RH	1	

FIG. & INDEX NO.	PART NO.	DESCRIPTION 1 2 3 4 5 6 7	UNITS PER ASSY	USABLE ON CODE
21 - 56	188024	. COVER ASSY,LIMIT SWITCH LOWER LH.	1	
	188024-1	. COVER ASSY,LIMIT SWITCH LOWER RH.	1	
		/ATTACHING PARTS/		
- 57	AN526-632-24	. SCREW	2	
	AN960-6	. WASHER.	2	
	AN365-632	. NUT	2	
		----*----		
- 58	404-188473	. TUBE ASSY,LANDING GEAR SLIDE.	1	
		/ATTACHING PARTS/		
- 59	AN6-23/M/	. BOLT.	1	
	AN960-616	. WASHER.	1	
	AN310-6	. NUT	1	
	AN380-3-3	. PIN,COTTER.	1	
- 60	404-188569	. BOLT,LOWER SLIDE TUBE	1	
	AN364-624	. NUT	1	
		----*----		
- 61	694-188465	. SLIDE ASSY,LANDING GEAR RETRACT	1	
	404-188464-8	. . SLIDE ASSY,LANDING GEAR MECHANISM	1	
- 62	188453-1	. . . BUSHING,RETRACT SLIDE	1	
- 63	188453-2	. . . BUSHING,RETRACT SLIDE	1	
- 64	894-188478	. . . BUSHING,LANDING GEAR SLIDE.	2	
- 65	404-188464	. . . SLIDE,LANDING GEAR MECHANISM.	1	
- 66	AN200KP4	. . BEARING	6	
- 67	188456	. . PIN,SLIDE BEARING	6	
- 68	404-188006	. CHAIN ASSY,LANDING GEAR RETRACT	1	
- 69	404-188468	. LUG,LANDING GEAR LIMIT SWITCH ACTUATOR LH . .	1	
	404-188468-1	. LUG,LANDING GEAR LIMIT SWITCH ACTUATOR RH . .	1	
- 70	804-188540	. BOLT,LANDING GEAR CHAIN EYE	1	
- 71	404-188540	. BOLT,LANDING GEAR CHAIN EYE	1	
- 72	S-34-1	. CLIP,SAFETY	2	
- 73	AN315-6R	. NUT	2	
- 74	AN364-624C	. NUT	2	
- 75	804-188573	. SPROCKET,LANDING GEAR MECHANISM UPPER	1	
- 76	AN200K6	. BEARING,LANDING GEAR MECHANISM UPPER.	2	
		/ATTACHING PARTS/		
- 77	AN6-27/M/	. BOLT.	1	
	AN960-616	. WASHER.	1	
	AN310-6	. NUT	1	
	AN380-3-3	. PIN,COTTER.	1	
		----*----		
- 78	804-188563	. SPROCKET,LANDING GEAR MECHANISM LOWER	1	
- 79	AN201K12A	. BEARING	2	

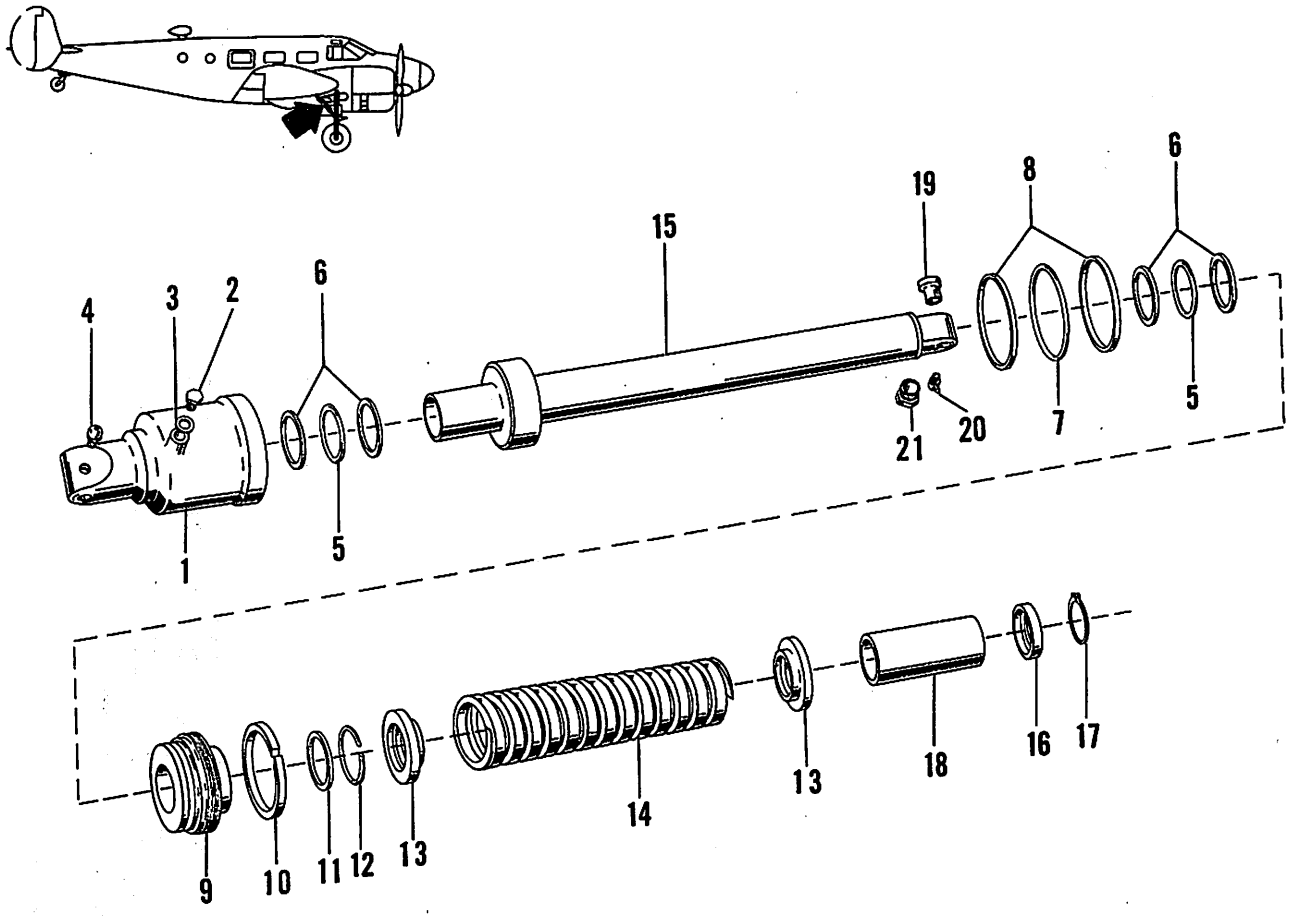

Figure 22. Landing Gear Drag Leg Assembly

C45H-4-22

FIG. & INDEX NO.	PART NO.	DESCRIPTION 1 2 3 4 5 6 7	UNITS PER ASSY	USABLE ON CODE
22	404-188027	LEG ASSY,LANDING GEAR DRAG/SEE FIG. 21 FOR NHA/	REF	
- 1	694-188006-1	. HOUSING,HYDRAULIC DRAG LEG.	1	
- 2	AN814-3	. PLUG.	1	
- 3	AN902-3	. GASKET.	1	
- 4	NAS2-101	. LUBRICATOR.	1	
- 5	AN6227-29	. PACKING,O RING.	2	
- 6	AN6246-29	. RING,PACKING BACKUP	4	
- 7	AN6230-11	. PACKING,O RING.	1	
- 8	AN6244-11	. RING,PACKING BACKUP	2	
- 9	734-188008	. PLUG,HYDRAULIC DRAG LEG	1	
- 10	AN6232C5-1/8	. RING,WIPER.	1	
- 11	AN6231A18	. RING,SCRAPER.	1	
- 12	734-188010	. RING,SCRAPER LOCK	1	
- 13	734-188011	. COLLAR,DRAG LEG SPRING RETAINER	2	
- 14	404-188036	. SPRING,DRAG LEG	1	
- 15	404-188028	. PISTON ASSY,HYDRAULIC DRAG LEG.	1	
- 16	734-188012	. COLLAR,DRAG LEG SLEEVE RETAINER	1	
- 17	NAS51-162	. RING,RETAINER	1	
- 18	404-188027-2	. TUBE,PISTON SPRING SPACING.	1	
- 19	734-188022	. BUSHING	2	
- 20	NAS2-201A	. LUBRICATOR.	1	
- 21	AN6287-1	. VALVE,HIGH PRESSURE AIR	1	

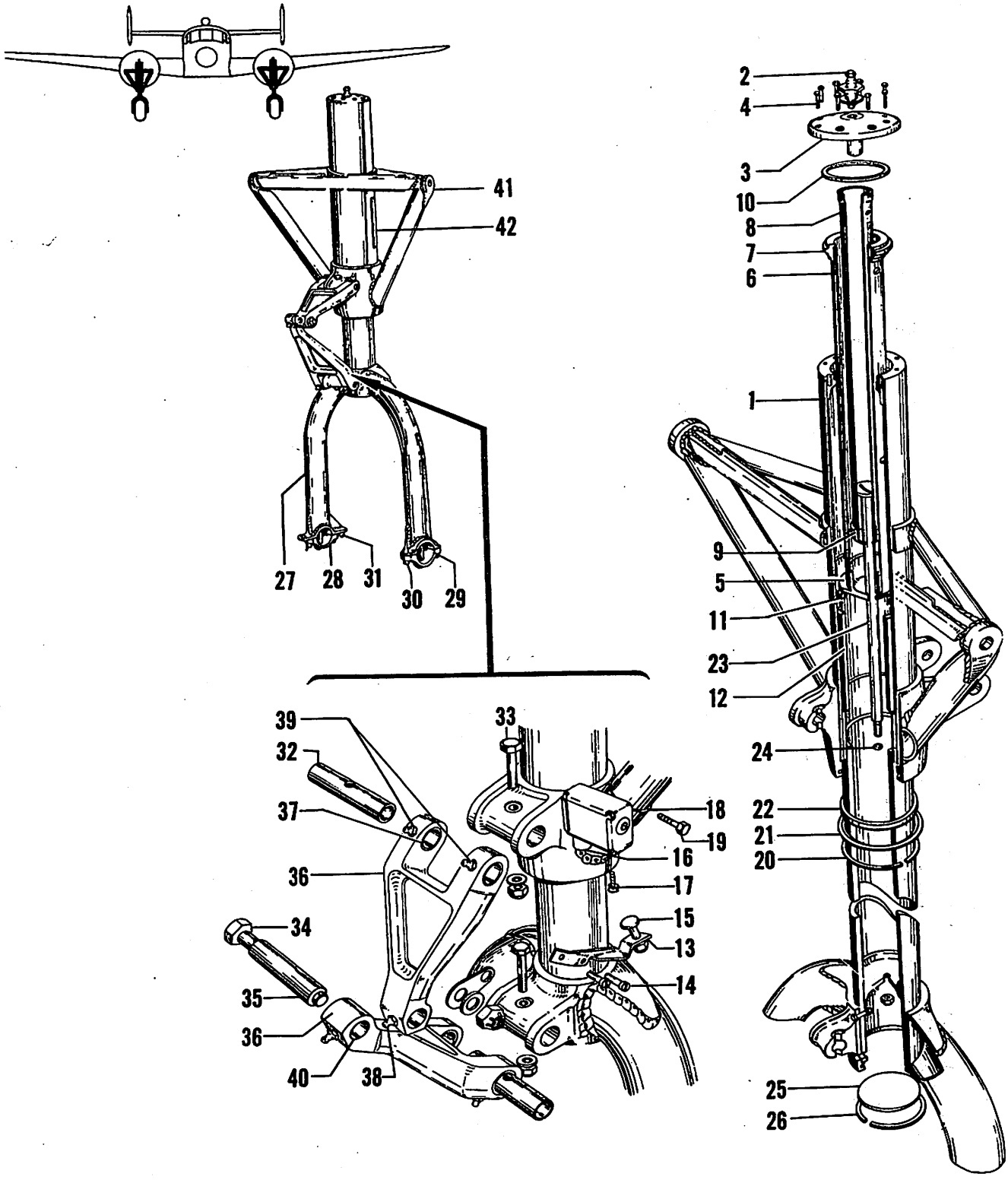

Figure 23. Landing Gear Shock Absorber Assembly

C45H-4-23

FIG. & INDEX NO.	PART NO.	DESCRIPTION 1 2 3 4 5 6 7	UNITS PER ASSY	USABLE ON CODE
23 - 1	404-188400	ABSORBER ASSY,LANDING GEAR SHOCK LH /SEE FIG. 21 FOR NHA/	REF	
	404-188400-3	ABSORBER ASSY,LANDING GEAR SHOCK RH /SEE FIG. 21 FOR NHA/	REF	
- 2	AN6287-1	. VALVE ASSY,HIGH PRESSURE 3/4 HEX	1	
- 3	404-188438	. CAP ASSY,LANDING GEAR OUTER CYLINDER /ATTACHING PARTS/	1	
- 4	AN74-5	. BOLT	8	
		-----*-----		
	404-188433	. CYLINDER ASSY,LANDING GEAR INNER	1	
- 5	404-188436	. . PLATE,LANDING GEAR SHOCK ABSORBER ORFICE	1	
- 6	404-188434	. . CYLINDER,LANDING GEAR INNER	1	
- 7	404-188435	. . RING,LANDING GEAR SHOCK ABSORBER ORFICE	1	
	404-188417	. CONTROL ASSY,LANDING GEAR REBOUND	1	
- 8	404-188417-2	. . TUBE,LANDING GEAR REBOUND CONTROL	1	
- 9	404-188416	. . FITTING,LANDING GEAR REBOUND CONTROL	1	
- 10	AN6230-12	. GASKET	1	
- 11	AN6227-44	. PACKING	1	
- 12	404-188400-2	. PAD	1	
- 13	404-188558	. ACTUATOR ASSY,LANDING GEAR SAFETY SWITCH /ATTACHING PARTS/	1	
- 14	AN503-8-6	. SCREW	2	
	AN960-8	. WASHER	2	
- 15	404-188559	. BOLT,LANDING GEAR SAFETY SWITCH ACTUATOR	1	
		-----*-----		
- 16	BZ-RQ41	. SWITCH,SAFETY /40228/ /ATTACHING PARTS/	1	
- 17	AN502-6-4	. SCREW	1	
	AN960-6	. WASHER	1	
		-----*-----		
- 18	404-188557	. BRACKET ASSY,LANDING GEAR SAFETY SWITCH /ATTACHING PARTS/	1	
- 19	AN4-7	. BOLT	1	
	AN960-416	. WASHER	1	
	AN310-4	. NUT	1	
	AN380-2-2	. PIN,COTTER	1	
		-----*-----		
- 20	111200-10	. RING,SNAP	1	
- 21	111290-20	. RING,SCRAPER	1	
- 22	114941	. RING	1	
- 23	404-188415	. STOP,LANDING GEAR EXTENSION	1	
- 24	AN6227-7	. RING,O	1	
	AN365-820	. NUT	1	
- 25	404-188456	. SEAL,LANDING GEAR FORK ASSY	1	
- 26	404-188455	. RING,LANDING GEAR FORK ASSY SEAL RETAINER	1	
- 27	404-188402	. PISTON & FORK ASSY,LANDING GEAR LH	1	
	404-188402-1	. PISTON & FORK ASSY,LANDING GEAR RH	1	
- 28	404-188402-2	. . CAP	1	
- 29	404-188402-4	. . CAP	1	
- 30	404-188442	. . STUD	2	
- 31	404-188462	. . STUD	2	
	404-188402-8	. . NUT	2	
	404-188402-10	. . NUT	2	
	404-188412	. KNEE ASSY,LANDING GEAR TORQUE /ATTACHING PARTS/	1	
- 32	404-188413	. PIN,LANDING GEAR TORQUE KNEE	2	
- 33	AN4-15A	. BOLT	2	
	AN960-416	. WASHER	2	
	AN365-428	. NUT	2	
- 34	AN8-32/M/	. BOLT	1	
- 35	188432-2	. BUSHING,TORQUE KNEE	1	
	AN960-816	. WASHER	3	
	AN310-8	. NUT	1	
	AN380-3-4	. PIN,COTTER	1	
		-----*-----		

FIG. & INDEX NO.	PART NO.	DESCRIPTION 1 2 3 4 5 6 7	UNITS PER ASSY	USABLE ON CODE
23 - 36	404-188412-2	. . KNEE,LANDING GEAR TORQUE /DRILL ON INSTL/ .	2	
- 37	404-188414	. . BUSHING,LANDING GEAR TORQUE KNEE.	2	
- 38	AN944-101A	. . LUBRICATOR.	1	
- 39	AN944-301	. . LUBRICATOR.	2	
- 40	404-188432	. . BUSHING,LANDING GEAR TORQUE KNEE PIVOT. . .	1	
- 41	404-188406-1	. BRACE ASSY,LANDING GEAR CYLINDER AND TOP. . .	1	
- 42	404-180193	. PLACARD,MAIN GEAR SHOCK STRUT LH.	1	
	694-180191	. PLACARD,MAIN GEAR SHOCK STRUT RH.	1	

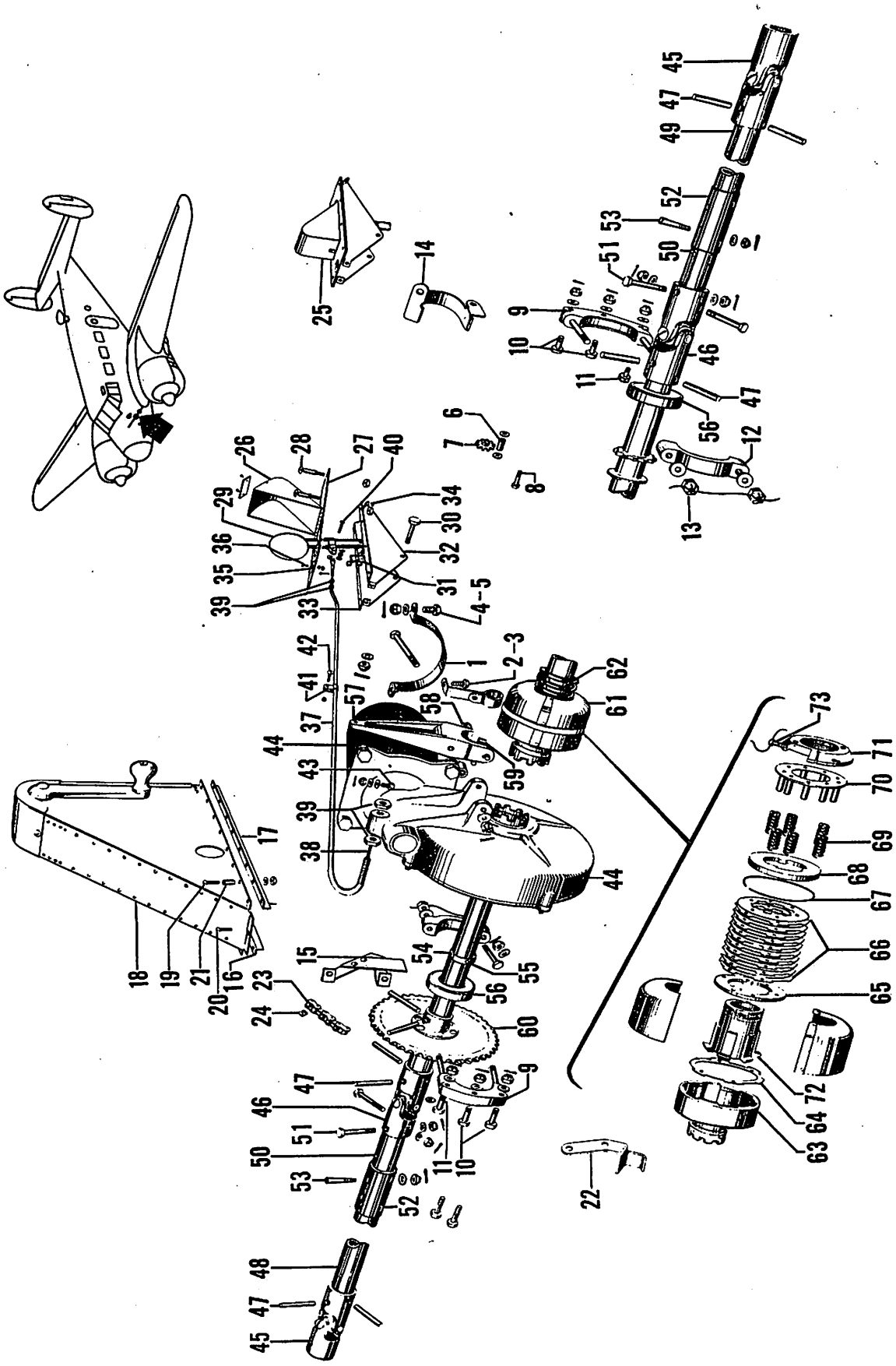

Figure 24. Landing Gear Retract Mechanism Installation

FIG. & INDEX NO.	PART NO.	DESCRIPTION 1 2 3 4 5 6 7	UNITS PER ASSY	USABLE ON CODE
24	404-188005	MECHANISM INSTL,LANDING GEAR RETRACT. /SEE FIG. 1 FOR NHA/	1	
- 1	404-184321*	. BRACKET,LANDING GEAR MOTOR BRUSH COVER.	1	
	734-184321**	. BRACKET,LANDING GEAR MOTOR BRUSH COVER. /ATTACHING PARTS/	1	
- 2	AN4-5	. BOLT.	1	
- 3	AN4-6	. BOLT.	1	
	AN960-416	. WASHER.	2	
	AN310-4	. NUT	2	
	AN380-2-2	. PIN,COTTER.	2	
- 4	AN500-8-6***	. SCREW	1	
- 5	AN500-8-4***	. SCREW	1	
		----*----		
- 6	188009	. BUSHING,TAIL WHEEL RETRACT SPROCKET	2	
- 7	188562	. SPROCKET,TAIL WHEEL RETRACT CABLE /ATTACHING PARTS/	2	
- 8	AN4-11	. BOLT.	2	
	AN960-416	. WASHER.	2	
	AN365-428	. NUT	2	
		----*----		
- 9	188503-1	. HOUSING ASSY,BEARING CROSS SHAFT. /ATTACHING PARTS/	2	
- 10	AN3-11	. BOLT.	2	
- 11	AN3-12	. BOLT.	1	
	AN960-10	. WASHER.	3	
	AN310-3	. NUT	3	
	AN380-2-2	. PIN,COTTER.	3	
		----*----		
- 12	188503	. HOUSING ASSY,BEARING HALF /ATTACHING PARTS/	2	
- 13	AN310-4	. NUT	2	
	AN960-416L	. WASHER.	2	
		----*----		
- 14	188851-1	. GUARD,TAIL WHEEL RETRACT CHAIN.	1	
- 15	804-188015	. GUARD ASSY,HAND CRANK CHAIN	1	
- 16	404-188005-2	. SUPPORT ASSY,HAND CRANK ANGLE LH.	1	
- 17	404-188005-3	. SUPPORT ASSY,HAND CRANK ANGLE RH.	1	
- 18	804-188519	. SUPPORT ASSY,LANDING GEAR & FLAP HAND CRANK /SEE FIG. 23/ /ATTACHING PARTS/	1	
- 19	AN515-8-16	. SCREW	15	
- 20	AN515-8-18	. SCREW	2	
	AN960-8	. WASHER.	17	
	AN365-832	. NUT	17	
- 21	100696-D08-06-018	. SPACER.	17	
		----*----		
- 22	804-188017	. GUARD,LANDING GEAR RETRACT CHAIN.	1	
- 23	804-188007	. CHAIN,LANDING GEAR RETRACT HAND CRANK	1	
- 24	S-34-2	. CLIP,LANDING GEAR RETRACT HAND CRANK SAFETY	1	
- 25	404-188950	. RELEASE ASSY,CLUTCH	1	
- 26	18316	. . COVER,CLUTCH RELEASE.	1	
- 27	188955	. . PLATE,CLUTCH RELEASE. /ATTACHING PARTS/	1	
- 28	AN526-832-16	. . SCREW	10	
	AN960-8	. . WASHER.	10	
	AN365-832	. . NUT	10	
		----*----		

*USED WITH 84-188590 LANDING GEAR MOTOR
**USED WITH 10559 LANDING GEAR MOTOR /35662/
***USED WITH 404-184321 BRACKET

FIG. & INDEX NO.	PART NO.	DESCRIPTION 1 2 3 4 5 6 7	UNITS PER ASSY	USABLE ON CODE
24 - 29	188951-1	. . PEDAL ASSY,CLUTCH RELEASE	1	
		/ATTACHING PARTS/		
- 30	AN4-15	. . BOLT.	1	
	AN960-416	. . WASHER.	1	
	AN310-4	. . NUT	1	
	AN380-2-2	. . PIN,COTTER.	1	
		----*----		
- 31	S-130	. . SPRING,CLUTCH RELEASE PEDAL	1	
- 32	404-188957	. . BRACKET,PEDAL CLUTCH RELEASE.	1	
- 33	404-188958	. . BRACKET,PEDAL CLUTCH RELEASE.	1	
		/ATTACHING PARTS/		
- 34	AN515-8-8	. . SCREW	2	
	AN960-8	. . WASHER.	2	
	AN365-832	. . NUT	2	
		----*----		
- 35	404-188951	. . STRIKE,CLUTCH RELEASE PEDAL COVER	1	
		/ATTACHING PARTS/		
- 36	AN515-4-14	. . SCREW	2	
	AN960-4	. . WASHER.	2	
	AN935-4	. . WASHER.	2	
	AN340-4	. . NUT	2	
		----*----		
- 37	188953	. HOUSING,CLUTCH RELEASE CABLE.	1	
- 38	188010	. CABLE ASSY,CLUTCH RELEASE	1	
		/ATTACHING PARTS/		
- 39	AN316-4R	. NUT	4	
- 40	AN393-11	. PIN	1	
	AN380-2-2	. PIN,COTTER.	2	
	AN960-10L	. WASHER.	3	
- 41	AN742-4	. CLIP.	3	
- 42	AN515-8-6	. SCREW	1	
	AN365-832	. NUT	1	
- 43	188956	. BOLT,LANDING GEAR CLUTCH RELEASE CABLE. . .	1	
	AN960-516L	. WASHER.	2	
	AN960-516	. WASHER.	1	
	AN365-524	. NUT	1	
		----*----		
	804-188500	. MECHANICAL ASSY,LANDING GEAR RETRACTING . . .	1	
		/DRILL ON INSTL/		
- 44	84-188900	. . MOTOR ASSY,LANDING GEAR 24 VOLT	1	
		/SEE FIG. 25/		
- 45	188505	. . UNIVERSAL,OUTER /DRILL ON INSTL/.	2	A-11
	404-188507	. . UNIVERSAL,OUTER /DRILL ON INSTL/.	2	A-12,B
- 46	188504	. . UNIVERSAL,INNER /DRILL ON INSTL/.	2	A-11
	404-188506	. . UNIVERSAL,INNER /DRILL ON INSTL/.	2	A-12,B
		/ATTACHING PARTS/		
- 47	804-188500-3	. . PIN	2	
		----*----		
- 48	804-188500-8	. . TUBE.	1	
- 49	804-188500-10	. . TUBE.	1	
- 50	804-188500-4	. . TUBE.	2	
		/ATTACHING PARTS/		
- 51	AN4-15	. . BOLT.	2	
	AN960-416	. . WASHER.	2	
	AN310-4	. . NUT	2	
	AN380-2-2	. . PIN,COTTER.	2	
		----*----		
- 52	804-188500-6	. . TUBE.	2	
		/ATTACHING PARTS/		
- 53	AN386-1-10	. . PIN,TAPER	4	
	AN975-3	. . WASHER.	4	
	AN320-3	. . NUT	4	
	AN380-2-2	. . PIN,COTTER.	4	
		----*----		

FIG. & INDEX NO.	PART NO.	DESCRIPTION 1 2 3 4 5 6 7	UNITS PER ASSY	USABLE ON CODE
24 - 54	188509-1	. . COLLAR. . . . . /ATTACHING PARTS/	1	
- 55	AN3-16	. . BOLT.	1	
	AN960-10	. . WASHER.	1	
	AN310-3	. . NUT	1	
	AN380-2-2	. . PIN,COTTER.	1	
		----*----		
- 56	KP16A	. . BEARING,/21335/	2	
- 57	188906	. . LEVER,SHIFTING. . . . . /ATTACHING PARTS/	1	
- 58	AN4-27	. . BOLT.	1	
	AN960-416	. . WASHER.	1	
	AN310-4	. . NUT	1	
	AN380-2-2	. . PIN,COTTER.	1	
		----*----		
- 59	188907	. . FINGERS . . . . . /ATTACHING PARTS/	2	
	AN380-2-2	. . PIN,COTTER.	1	
		----*----		
- 60	804-188502	. . SPROCKET ASSY	1	
- 61	188914	. . COVER,LANDING GEAR OVERLOAD CLUTCH. . . .	1	
- 62	404-188508	. . SPRING,LANDING GEAR CLUTCH.	1	
	404-188910	. . CLUTCH ASSY,LANDING GEAR OVERLOAD	1	
- 63	404-188913	. . . HOUSING ASSY.	1	
- 64	42088	. . . SPACER,/93575/.	1	
- 65	13210	. . . WASHER,BACKING /93575/.	1	
- 66	60344	. . . PACK,CLUTCH /93575/	1	
- 67	14942	. . . RING,LOCK /93575/	1	
- 68	15142	. . . SPACER,/93575/.	1	
- 69	110207	. . . SPRING,/93575/.	6	
- 70	15191	. . . RING ASSY,CLUTCH /93575/.	1	
- 71	188913	. . . NUT,ADJUSTMENT.	1	
- 72	188912	. . . HUB,CLUTCH.	1	
- 73	AN502-10-16	. . . SCREW	1	

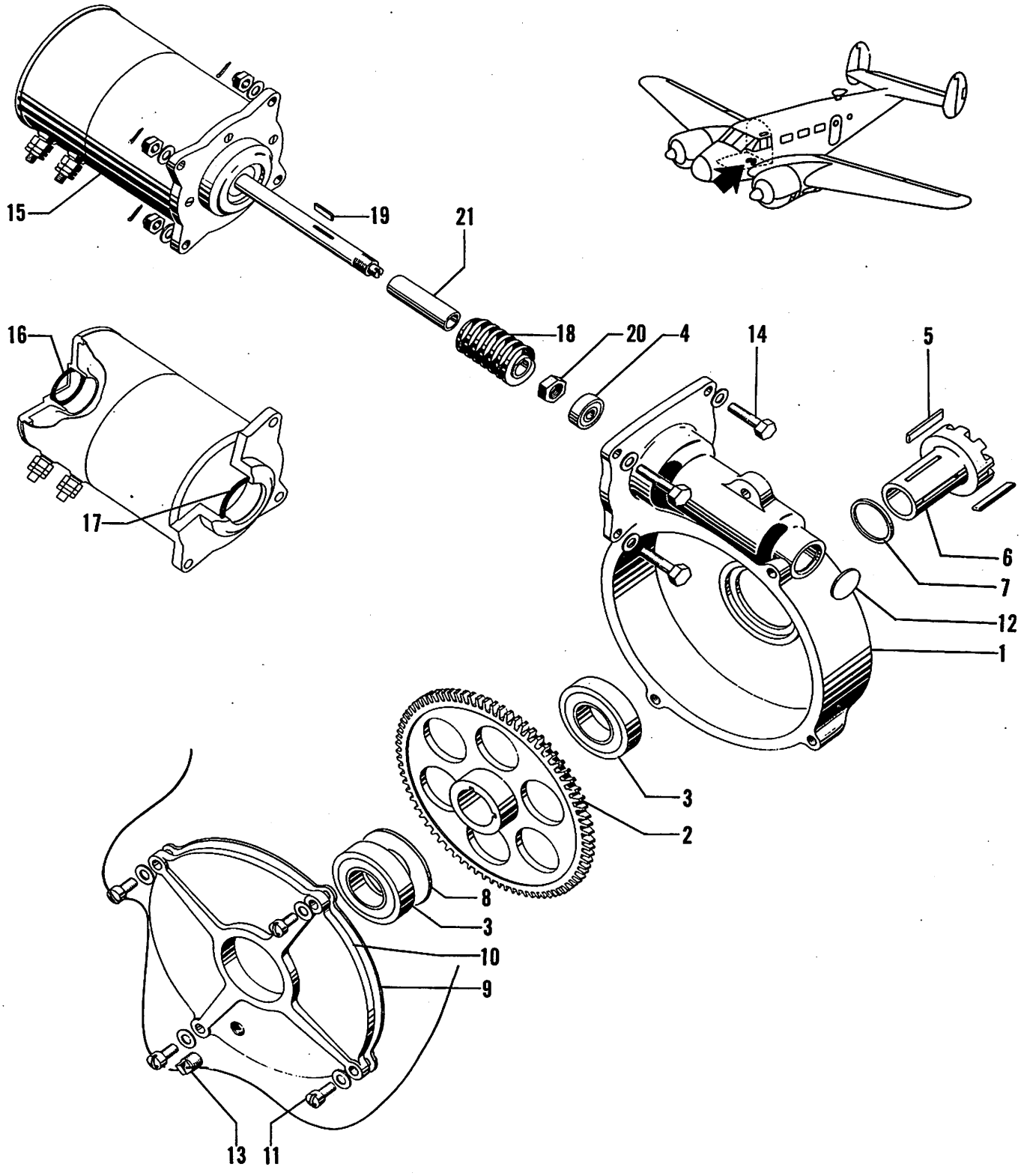

Figure 25. Landing Gear Retract Assembly

C45H-4-25

FIG. & INDEX NO.	PART NO.	DESCRIPTION 1 2 3 4 5 6 7	UNITS PER ASSY	USABLE ON CODE
25	84-188900	MOTOR ASSY,LANDING GEAR 24 VOLT /SEE FIG. 24 FOR NHA/	REF	
	84-188900-3	. MOTOR ASSY,LANDING GEAR /SPARE ASSY/	1	
- 1	188901	. . HOUSING,GEAR	1	
- 2	404-188959	. . GEAR,LANDING GEAR MOTOR	1	
- 3	AN201KP20A	. . BEARING	2	
- 4	AN201KP6A	. . BEARING	1	
- 5	188908	. . KEY,CLUTCH GEAR	2	
- 6	188905A-1	. . CLUTCH,LANDING GEAR MOTOR ASSY	1	
- 7	188905A-3	. . SPACER,LANDING GEAR MOTOR ASSY	1	
- 8	100951-X-020-108-116	. . SPACER	1	
- 9	188970	. . GASKET,GEAR HOUSING COVER	1	
- 10	188902	. . PLATE,GEAR HOUSING COVER /ATTACHING PARTS/	1	
- 11	AN500A10-10	. . SCREW	4	
	AN960-10	. . WASHER	4	
- 12	84-188900-1	. . PLUG,WELCH	1	
- 13	AN913-1	. . PLUG,PIPE	1	
	824-188895	. MOTOR & GEAR ASSY,LANDING GEAR RETRACT /ATTACHING PARTS/	1	
- 14	AN5-10	. BOLT	3	
	AN5-11	. BOLT	1	
	AN960-516	. WASHER	8	
	AN365-524	. NUT	4	
- 15	84-188590	. . MOTOR ASSY,/MAKE FR /20019/ TYPE HCA3/	1	
	404-188590	. . MOTOR ASSY,/ALTERNATE FOR 84-188590/ /MAKE FR /35662/ 10379 OR 10559 MOTOR/	1	
- 16	824-188895-2	. . SHIM	1	
- 17	824-188895-4	. . SHIM	1	
- 18	824-188904	. . GEAR,LANDING GEAR MOTOR WORM	1	
- 19	188909*	. . KEY	1	
	AN280H406**	. . KEY	1	
- 20	AN316-8R	. . NUT	1	
- 21	824-188896*	. . SPACER	1	

*TO BE USED WITH 84-188590 MOTOR
**TO BE USED WITH 404-188590 MOTOR

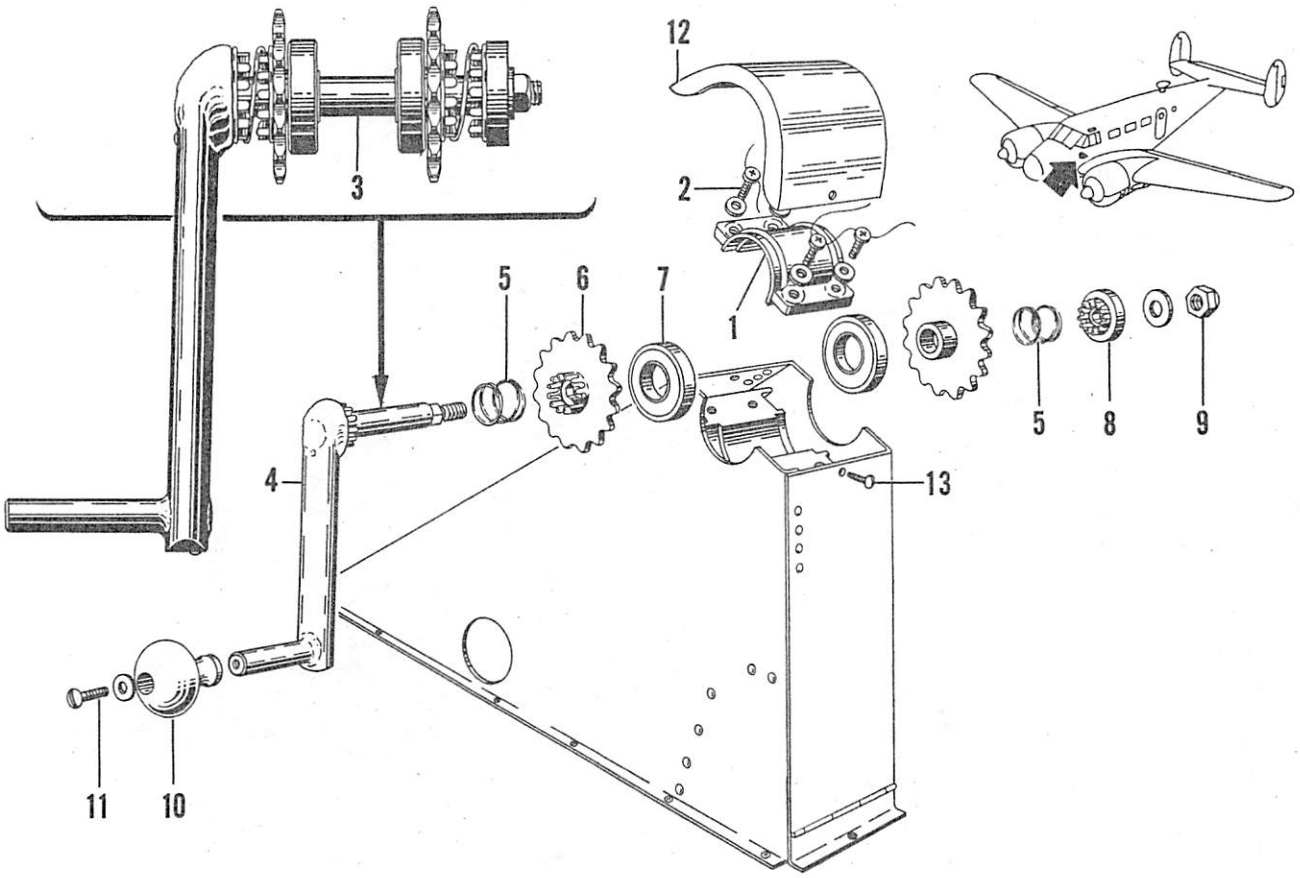

Figure 26. Landing Gear and Flap Handcrank Support Assembly

C45H-4-26

FIG. & INDEX NO.	PART NO.	DESCRIPTION 1 2 3 4 5 6 7	UNITS PER ASSY	USABLE ON CODE
26	804-188519	SUPPORT ASSY,LANDING GEAR & FLAP HAND CRANK /SEE FIG. 24 FOR NHA/	REF	
	188511	. HOUSING ASSY,LANDING GEAR & FLAP HAND CRANK	1	
- 1	188512	. . CAP,LANDING GEAR CRANK HOUSING ASSY /ATTACHING PARTS/	1	
- 2	AN500A10-10	. . SCREW	4	
	AN960-10	. . WASHER	4	
		----*----		
- 3	188518	. CRANK ASSY,LANDING GEAR & FLAP SUPPORT	1	
- 4	188515	. . HANDLE ASSY,LANDING GEAR & FLAP CRANK	1	
- 5	188516	. . SPRING,LANDING GEAR HAND CRANK ASSY	2	
	188518-1	. . BEARING & SPROCKET ASSY	2	
- 6	188561-1	. . . SPROCKET,LANDING GEAR HAND CRANK ASSY	1	
- 7	AN201K10A	. . . BEARING,LANDING GEAR HAND CRANK ASSY	1	
- 8	188568	. . SPROCKET,LANDING GEAR CRANK ASSY /ATTACHING PARTS/	1	
- 9	AN365-524	. . NUT	1	
	AN960-516	. . WASHER	1	
		----*----		
- 10	188517	. KNOB,HAND CRANK /ATTACHING PARTS/	1	
- 11	AN526-8-10	. SCREW	1	
	AN960-8	. WASHER	1	
		----*----		
- 12	188532	. CAP,HAND CRANK SUPPORT /ATTACHING PARTS/	1	
- 13	AN515-8-5	. SCREW	2	
		----*----		

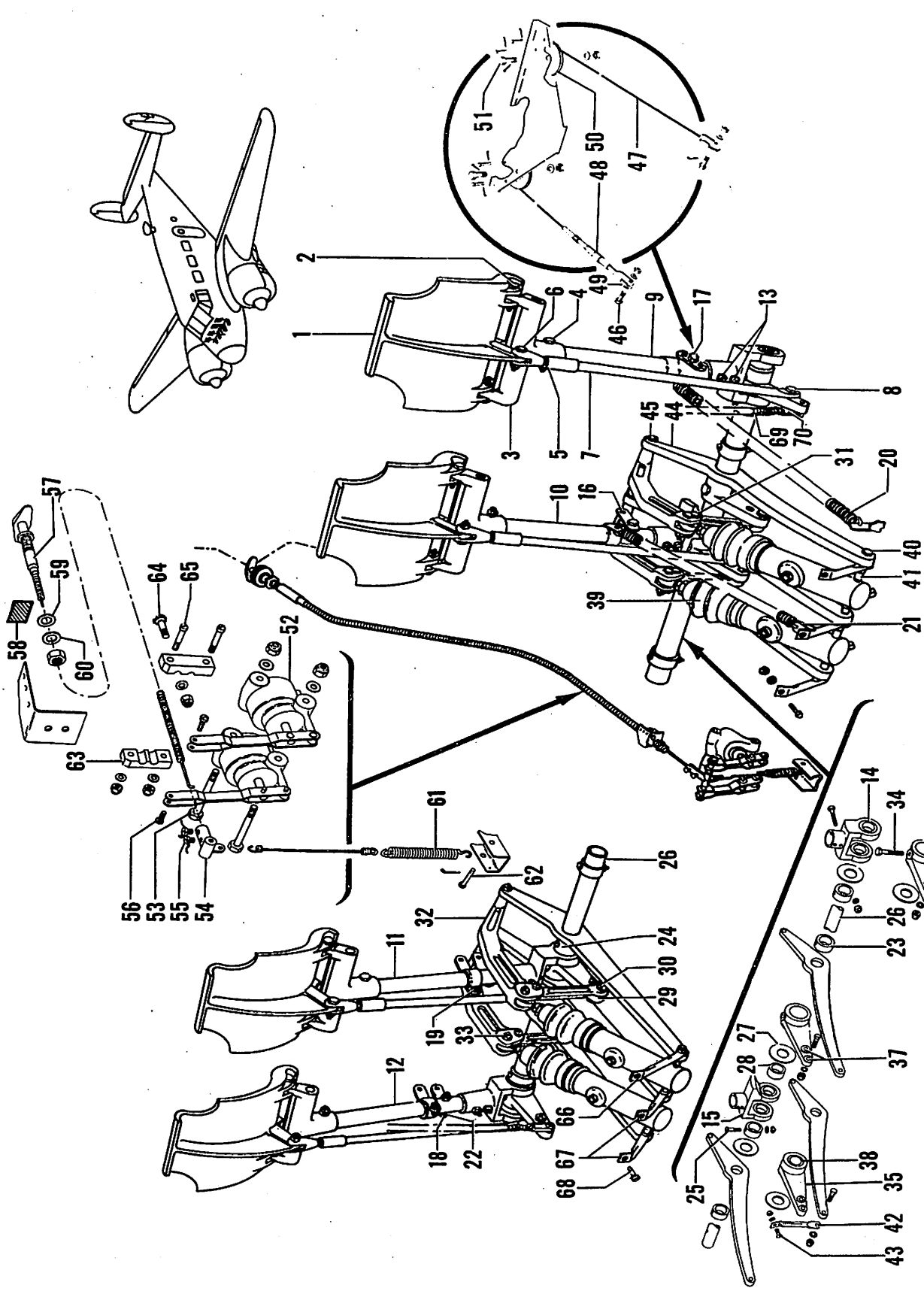

Figure 27. Dual Brake System Installation

FIG. & INDEX NO.	PART NO.	DESCRIPTION 1 2 3 4 5 6 7	UNITS PER ASSY	USABLE ON CODE
27	734-187940-2	BRAKE INSTL,DUAL SYSTEM /SEE FIG. 1 FOR NHA/. .	1	A-1
	734-187940	BRAKE INSTL,DUAL SYSTEM /SEE FIG. 1 FOR NHA/. .	1	B
	734-187950-6	BRAKE INSTL,DUAL SYSTEM /SEE FIG. 1 FOR NHA/. .	1	A-2
- 1	35-524011	. PEDAL,RUDDER & BRAKE. . . . . /ATTACHING PARTS/	4	
- 2	AN3-10	. BOLT.	2	
	AN960-10L	. WASHER.	2	
	AN310-3	. NUT	2	
	AN380-2-2	. PIN,COTTER.	2	
- 3	404-187929	. HANGER,RUDDER PEDAL . . . . . /ATTACHING PARTS/	4	
- 4	AN3-13A	. BOLT.	1	
	AN960-10	. WASHER.	1	
	AN365-1032	. NUT	1	
- 5	404-187942	. TERMINAL,BRAKE ROD UPPER. . . . . /ATTACHING PARTS/	4	
- 6	AN3-7	. BOLT.	1	
	AN960-10L	. WASHER.	1	
	AN310-3	. NUT	1	
	AN380-2-2	. PIN,COTTER.	1	
- 7	644-187944	. ROD ASSY,BRAKE. . . . . /ATTACHING PARTS/	4	
- 8	AN3-11	. BOLT.	1	
	AN960-10L	. WASHER.	1	
	AN380-2-2	. PIN,COTTER.	1	
	AN310-3	. NUT	1	
- 9	734-187945	. SUPPORT ASSY,PILOTS RUDDER PEDAL LH	1	
- 10	404-187948	. SUPPORT ASSY,PILOTS RUDDER PEDAL RH	1	
- 11	734-187945-1	. SUPPORT ASSY,COPILOTS RUDDER PEDAL LH . . .	1	
- 12	734-187947	. SUPPORT ASSY,COPILOTS RUDDER PEDAL RH . . . . /ATTACHING PARTS/	1	
- 13	AN3-13A	. BOLT.	2	
	AN960-10	. WASHER.	2	
	AN365-1032	. NUT	2	
- 14	404-187818	. YOKE ASSY,RUDDER PEDAL CROSS SHAFT. . . . . /DRILL ON INSTL/	2	
- 15	894-187818	. YOKE ASSY,RUDDER PEDAL CROSS SHAFT. . . . . /DRILL ON INSTL/	2	
- 16	D177954	. LINK,CABLE EXTENSION.	4	A-13,B
	D177954	. LINK,CABLE EXTENSION.	3	A-14
	404-187908	. LINK,CABLE EXTENSION. . . . . /ATTACHING PARTS/	1	A-14
- 17	AN23-19	. BOLT,PILOTS PEDAL SUPPORT	2	
- 18	AN23-29	. BOLT,COPILOTS PEDAL SUPPORT RH.	1	
- 19	AN23-19	. BOLT,COPILOTS PEDAL SUPPORT LH.	1	
	AN960-10	. WASHER.	1	
	AN320-3	. NUT	1	
	AN960-10L	. WASHER.	1	
	AN380-2-2	. PIN,COTTER.	1	
- 20	S-141	. SPRING,RUDDER PEDAL BALANCE	2	
- 21	187482	. CLIP,RUDDER PEDAL SPRING.	1	
- 22	404-187907	. SPACER,COPILOTS PEDAL RH.	1	
- 23	187402	. COLLAR,RUDDER PEDAL CROSS SHAFT	6	
- 24	404-187402	. COLLAR,RUDDER PEDAL CROSS SHAFT . . . . . /ATTACHING PARTS/	2	
- 25	AN515-8-24	. SCREW	1	
	AN960-8	. WASHER.	1	
	AN365-832	. NUT	1	

FIG. & INDEX NO.	PART NO.	DESCRIPTION 1 2 3 4 5 6 7	UNITS PER ASSY	USABLE ON CODE
27 - 26	734-187972	. SHAFT,RUDDER PEDAL CROSS.	2	
- 27	100951-S-032-029-108	. WASHER.	10	
- 28	100696-S32-29-016	. SPACER.	2	
- 29	404-187949	. LINK,BRAKE MASTER CYLINDER ACTUATING. . . . . /ATTACHING PARTS/	4	
- 30	AN3-11	. BOLT.	2	
	AN310-3	. NUT	1	
	AN960-10L	. WASHER.	1	
	AN380-2-2	. PIN,COTTER.	1	
- 31	AN3-10	. BOLT.	1	
	AN960-10L	. WASHER.	1	
	AN310-3	. NUT	1	
	AN380-2-2	. PIN,COTTER.	1	
		----*----		
- 32	404-187822	. LINK,BRAKE MASTER CYLINDER ACTUATING MECH. LH	2	
	404-187822-1	. LINK,BRAKE MASTER CYLINDER ACTUATING MECH. RH /ATTACHING PARTS/	2	
- 33	AN4-10	. BOLT.	1	
	AN960-416	. WASHER.	1	
	AN310-4	. NUT	1	
	AN380-2-3	. PIN,COTTER.	1	
		----*----		
	734-187927	. BELLCRANK ASSY,BRAKE MASTER CYLINDER ACTUATOR	2	
	694-187927	. BELLCRANK ASSY,BRAKE MASTER CYLINDER ACTUATOR /ATTACHING PARTS/	4	
- 34	NAS54A16	. BOLT.	1	
	AN960-416L	. WASHER.	1	
	AN365-428	. NUT	1	
		----*----		
- 35	734-187927-2	. . BELLCRANK,MASTER CYLINDER ACTUATING	1	
- 36	694-187927-1	. . BELLCRANK,MASTER CYLINDER ACTUATING	1	
- 37	105740-X0193-0251-0510	. . BUSHING	2	
- 38	404-187937-6	. . BUSHING	1	
- 39	694-187800	. CYLINDER ASSY,BRAKE MASTER /SEE FIG. 29/. . . /ATTACHING PARTS/	4	
- 40	NAS54-56	. BOLT.	1	
- 41	100696-S11-09-008	. SPACER.	2	
	AN960-416L	. WASHER.	1	
	AN310-4	. NUT	1	
		----*----		
	734-187948-2	. PLUMBING INSTL,BRAKE /SEE FIG. 28/.	1	A
	734-187948	. PLUMBING INSTL,BRAKE /SEE FIG. 28/.	1	B
- 42	404-187852	. SUPPORT,PILOTS BRAKE LINKAGE. . . . . /ATTACHING PARTS/	3	
- 43	AN526-1032-8	. SCREW	1	
	AN960-10L	. WASHER.	1	
	AN960-416	. WASHER.	1	
	AN365-1032	. NUT	1	
		----*----		
- 44	734-187848	. SUPPORT ASSY,BRAKE MASTER CYLINDER.	4	
	734-187847	. SUPPORT,BRAKE MASTER CYLINDER . . . . . /ATTACHING PARTS/	2	
- 45	AN5-55	. BOLT.	1	
	AN960-516	. WASHER.	1	
	AN310-5	. NUT	1	
	AN380-2-3	. PIN,COTTER.	1	
		----*----		
	404-187887	. CABLE ASSY,BRAKE BALANCE. . . . . /ATTACHING PARTS/	2	
- 46	AN3-6	. BOLT.	3	
	AN310-3	. NUT	3	
	AN960-10	. WASHER.	5	
	AN380-2-2	. PIN,COTTER.	3	
		----*----		

FIG. & INDEX NO.	PART NO.	DESCRIPTION	UNITS PER ASSY	USABLE ON CODE
27 - 47	NAS314-27-0304	. . CABLE ASSY,BRAKE BALANCE.	1	
- 48	AN155-32S	. . BARREL.	1	
- 49	AN161-22RL	. . FORK.	1	
- 50	AN210-3A	. PULLEY.	4	
		/ATTACHING PARTS/		
- 51	AN4-11	. BOLT.	1	
	AN960-416	. WASHER.	1	
	AN310-4	. NUT	1	
	AN380-2-3	. PIN,COTTER.	1	
		----*----		
	AN392-23	. PIN	2	
	AN380-2-2	. PIN,COTTER.	4	
	734-187996	. VALVE INSTL,PARKING BRAKE	1	A-1
	404-187996	. VALVE INSTL,PARKING BRAKE	1	B,A-2
- 52	4500SA-1	. . VALVE ASSY,PARKING BRAKE /53655/.	2	
		/ATTACHING PARTS/		
- 53	AN3-24A	. . BOLT.	1	
	AN960-10	. . WASHER.	1	
	AN365-1032	. . NUT	1	
		----*----		
- 54	404-187992	. . LINK ASSY,PARKING BRAKE VALVE CONTROL	1	
- 55	AN500A6-5	. . SCREW	2	
- 56	AN500A6-12	. . SCREW	2	
- 57	404-187905	. . CONTROL ASSY,PARKING BRAKE.	1	
	AN960-716L	. . WASHER.	1	
- 58	734-180027	. . PLACARD	1	A-1
- 59	100951-S-032-014-100	. . WASHER.	1	A-1
- 60	100951-S-032-014-025	. . WASHER.	1	A-1
	AN960-716	. . WASHER.	1	B,A-2
- 61	100942-063-014-216-40	. . SPRING.	1	
		/ATTACHING PARTS/		
- 62	AN395-25	. . PIN	1	A-1
	AN380-2-2	. . PIN,COTTER.	1	A-1
		----*----		
- 63	404-187904	. . BLOCK,PARKING BRAKE CONTROL	1	
		/ATTACHING PARTS/		
- 64	AN526-832-12	. . SCREW	1	
	AN960-8	. . WASHER.	1	
	AN365-832	. . NUT	1	
- 65	AN526-832-20	. . SCREW	2	
	AN960-6	. . WASHER.	2	
	AN365-632	. . NUT	2	
		----*----		
- 66	734-187853	. SUPPORT,COPILOTS BRAKE LINKAGE.	1	
- 67	404-187853	. SUPPORT,COPILOTS BRAKE LINKAGE.	2	
		/ATTACHING PARTS/		
- 68	AN526-1032-8	. SCREW	1	
	AN960-10L	. WASHER.	1	
	AN365-1032	. NUT	1	
		----*----		
- 69	106203-00100	. LINK.	1	
- 70	100942-063-014-216-40	. SPRING.	1	

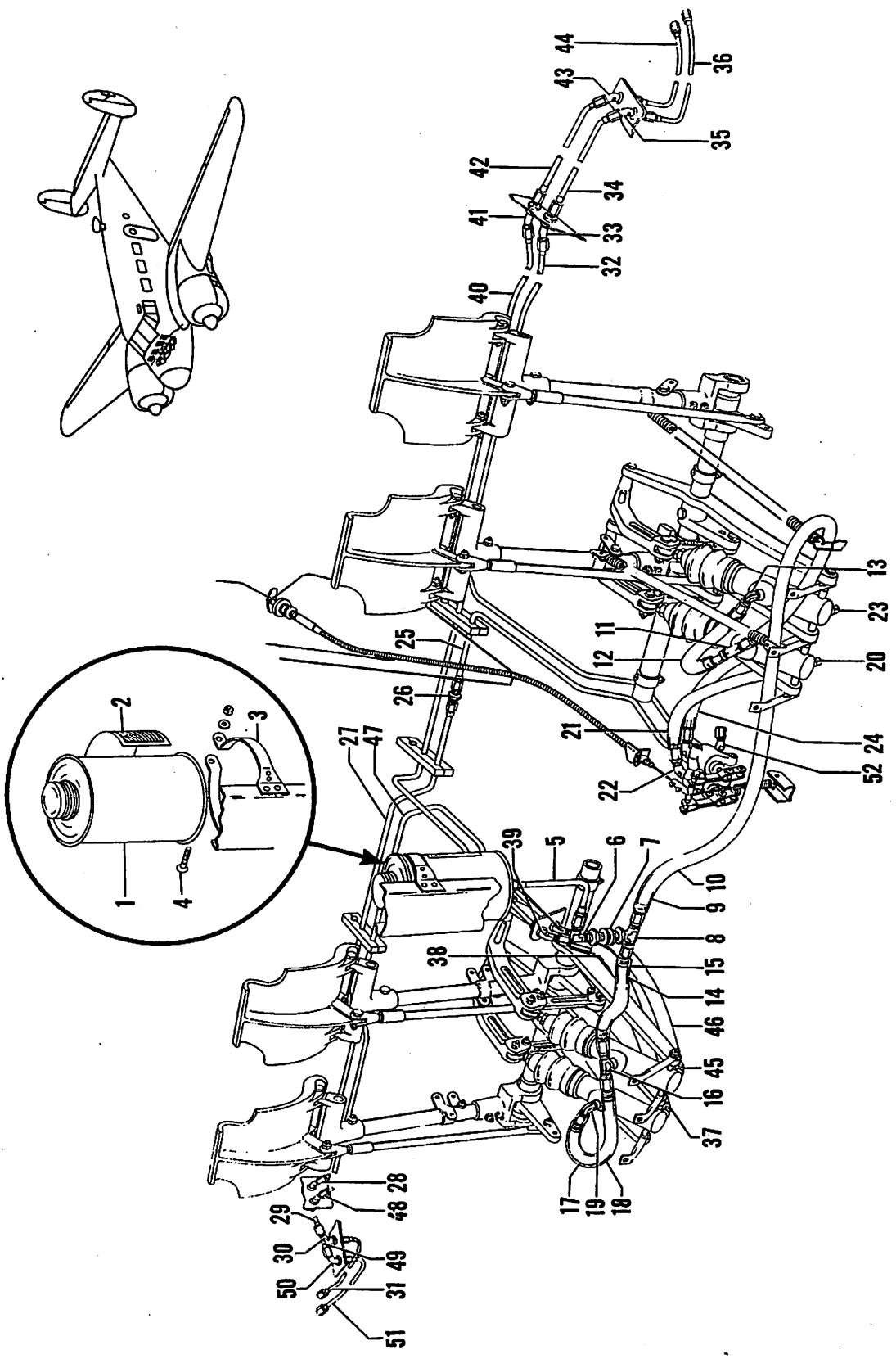

Figure 28. Brake System Plumbing Installation

FIG. & INDEX NO.	PART NO.	DESCRIPTION 1 2 3 4 5 6 7	UNITS PER ASSY	USABLE ON CODE
28	734-187948	PLUMBING INSTL,BRAKE SYSTEM /SEE FIG. 27 FOR NHA/	REF	B
	734-187948-2	PLUMBING INSTL,BRAKE SYSTEM /SEE FIG. 27 FOR NHA/	REF	A
	794-187900	. TANK INSTL,HYDRAULIC BRAKE FLUID SUPPLY	1	B
	694-187900	. TANK INSTL,HYDRAULIC BRAKE FLUID SUPPLY	1	A
- 1	112136-10	. . CAN ASSY,HYDRAULIC BRAKE FLUID SUPPLY	1	
- 2	107486	. . PLACARD,HYDRAULIC BRAKE FLUID SUPPLY.	1	
- 3	187921	. . BRACKET ASSY,BRAKE FLUID SUPPLY TANK. /ATTACHING PARTS/	1	
- 4	AN520-10-14	. . SCREW	1	
	AN960-10	. . WASHER.	1	
	AN365-1032	. . NUT	1	
		----*----		
- 5	694-187949	. TUBE ASSY,BRAKE FLUID SUPPLY.	1	A
	734-187949	. TUBE ASSY,BRAKE FLUID SUPPLY.	1	B
- 6	AN822-4D	. ELBOW	1	
- 7	404-187884	. COUPLING.	1	
	AN960-816	. WASHER.	2	
	AN316-8R	. NUT	2	
- 8	AN825-4D	. TEE	1	
- 9	AN6270-4-27-1/4	. HOSE ASSY,PILOTS BRAKE.	1	
- 10	106242-9-02404	. TUBE.	1	
- 11	AN825-4D	. TEE	1	
- 12	AN6270-4-15-3/4	. HOSE ASSY,PILOTS BRAKE.	1	
- 13	AN822-4D	. ELBOW,90 DEGREE	1	
- 14	AN6270-4-10	. HOSE ASSY,COPILOTS BRAKE.	1	
- 15	106242-7-00700	. TUBE.	1	
- 16	AN825-4D	. TEE	1	
- 17	AN6270-4-19-1/4	. HOSE ASSY,COPILOTS BRAKE.	1	
- 18	106242-9-01604	. TUBE.	1	
- 19	AN822-4D	. ELBOW,90 DEGREE	1	
- 20	AN823-4	. ELBOW,90 DEGREE	1	
- 21	AN6271-4-11	. HOSE ASSY,PARKING BRAKE VALVE	1	
- 22	AN822-4D	. ELBOW	1	
- 23	AN823-4	. ELBOW	1	
- 24	AN6271-4-12	. HOSE ASSY,PARKING BRAKE VALVE	1	
	AN822-4D	. ELBOW,90 DEGREE	1	
- 25	404-188008	. TUBE ASSY,PILOTS BRAKE RH	1	A-15,B
	694-188008	. TUBE ASSY,PILOTS BRAKE RH	1	A-16
- 26	AN815-4D	. UNION	1	
- 27	734-187952	. TUBE ASSY,PILOTS BRAKE RH	1	
- 28	AN837-4D	. ELBOW,45 DEGREE	1	
	AN924-4D	. NUT	1	
	AN960A716	. WASHER.	1	
- 29	404-188018	. TUBE ASSY,PILOTS BRAKE RH	1	
- 30	AN837-4D	. ELBOW,45 DEGREE	1	
	AN924-4D	. NUT	1	
	AN960A716	. WASHER.	2	
- 31	404-188020	. TUBE ASSY,PILOTS BRAKE RH	1	
	AN822-4D	. ELBOW,90 DEGREE	1	
- 32	734-187951	. TUBE ASSY,PILOTS BRAKE LH	1	A-15,B
	694-187951	. TUBE ASSY,PILOTS BRAKE LH	1	A-16
- 33	AN837-4D	. ELBOW,45 DEGREE	1	
	AN924-4D	. NUT	1	
	AN960A716	. WASHER.	2	
- 34	404-188013	. TUBE ASSY,PILOTS BRAKE LH	1	
- 35	AN837-4D	. ELBOW,45 DEGREE	1	
	AN924-4D	. NUT	1	
	AN960A716	. WASHER.	2	
- 36	404-188015	. TUBE ASSY,PILOTS BRAKE LH	1	
- 37	AN823-4	. ELBOW,45 DEGREE	1	
- 38	AN6271-4-11	. HOSE ASSY,COPILOTS BRAKE LH	1	
- 39	AN837-4D	. ELBOW,45 DEGREE	1	
	AN924-4D	. NUT	1	
	AN960A716	. WASHER.	2	

FIG. & INDEX NO.	PART NO.	DESCRIPTION 1 2 3 4 5 6 7	UNITS PER ASSY	USABLE ON CODE
28 - 40	734-187953	• TUBE ASSY,COPILOTS BRAKE LH	1	
- 41	AN837-4D	• ELBOW,45 DEGREE	1	
	AN924-4D	• NUT	1	
	AN960A716	• WASHER	2	
- 42	404-188014	• TUBE ASSY,COPILOTS BRAKE LH	1	
- 43	AN837-4D	• ELBOW,45 DEGREE	1	
	AN924-4D	• NUT	1	
	AN960A716	• WASHER	2	
- 44	404-188016	• TUBE ASSY,COPILOTS BRAKE LH	1	
- 45	AN823-4	• ELBOW,45 DEGREE	1	
- 46	AN6271-4-11	• HOSE ASSY,COPILOTS BRAKE RH	1	
	AN837-4D	• ELBOW,45 DEGREE	1	
	AN924-4D	• NUT	1	
	AN960A716	• WASHER	2	
- 47	734-187954	• TUBE ASSY,COPILOTS BRAKE RH	1	
- 48	AN837-4D	• ELBOW,45 DEGREE	1	
- 49	404-188017	• TUBE ASSY,COPILOTS BRAKE RH	1	
- 50	AN837-4D	• ELBOW,45 DEGREE	1	
	AN924-4D	• NUT	1	
	AN960A716	• WASHER	2	
- 51	404-188019	• TUBE ASSY,COPILOTS BRAKE RH	1	
- 52	AN822-4D	• ELBOW,90 DEGREE	1	
	AN816-4D	• NIPPLE	1	

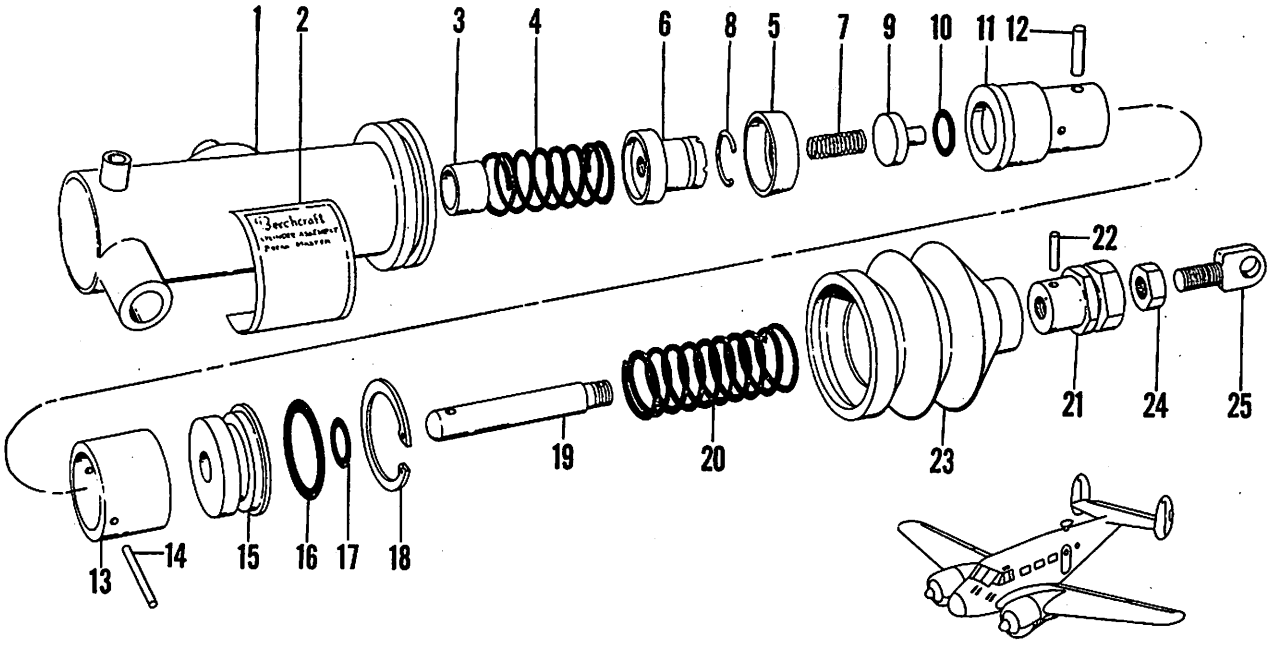

Figure 29. Brake Master Cylinder Assembly

C45H-4-29

FIG. & INDEX NO.	PART NO.	DESCRIPTION 1 2 3 4 5 6 7	UNITS PER ASSY	USABLE ON CODE
29	694-187800	CYLINDER ASSY,BRAKE MASTER/SEE FIG. 27 FOR NHA/	REF	
- 1	404-187814	. CYLINDER,BRAKE MASTER	1	
- 2	694-180113	. PLACARD,BRAKE MASTER CYLINDER	1	
- 3	100696-A19-15-014	. SPACER,BRAKE MASTER CYLINDER.	1	
- 4	694-187804	. SPRING,BRAKE MASTER CYLINDER.	1	
	694-187801	. PISTON ASSY,BRAKE MASTER CYLINDER	1	
- 5	694-187803	. . CUP,BRAKE MASTER CYLINDER PISTON.	1	
- 6	694-187806	. . RETAINER,BRAKE MASTER CYLINDER PISTON	1	
- 7	111504-010-016-0024-22	. . SPRING,BRAKE MASTER CYLINDER PISTON	1	
- 8	644-187811	. . RING,RETAINER	1	
- 9	644-187815	. . VALVE ASSY,POPPET	1	
- 10	AN622788	. . RING,O.	1	
- 11	694-187802	. . PISTON,BRAKE MASTER CYLINDER.	1	
- 12	694-187801-3	. . PIN,BRAKE MASTER CYLINDER	1	
- 13	694-187811	. . SLEEVE,BRAKE MASTER CYLINDER.	1	
- 14	694-187801-1	. . PIN,BRAKE MASTER CYLINDER	1	
- 15	694-187813	. . CAP,BRAKE MASTER CYLINDER	1	
- 16	AN6227B15	. . RING,O.	1	
- 17	AN6227B8	. . RING,O.	1	
- 18	NAS50-112	. . RING,RETAINER	1	

FIG. & INDEX NO.	PART NO.	DESCRIPTION 1 2 3 4 5 6 7	UNITS PER ASSY	USABLE ON CODE
29 - 19	694-187807	. . ROD,BRAKE MASTER CYLINDER	1	
- 20	694-187814	. . SPRING,BRAKE MASTER CYLINDER.	1	
- 21	214182	. . COUPLING,BRAKE MASTER CYLINDER /73842/. . .	1	
- 22	102809-A093-017	. . PIN,BRAKE MASTER CYLINDER	1	
	AN380-3-3	. . PIN,COTTER.	1	
- 23	218077	. BOOT,BRAKE MASTER CYLINDER /73842/.	1	
- 24	AN335-5	. NUT	1	
- 25	404-187803	. TERMINAL,BRAKE MASTER CYLINDER.	1	

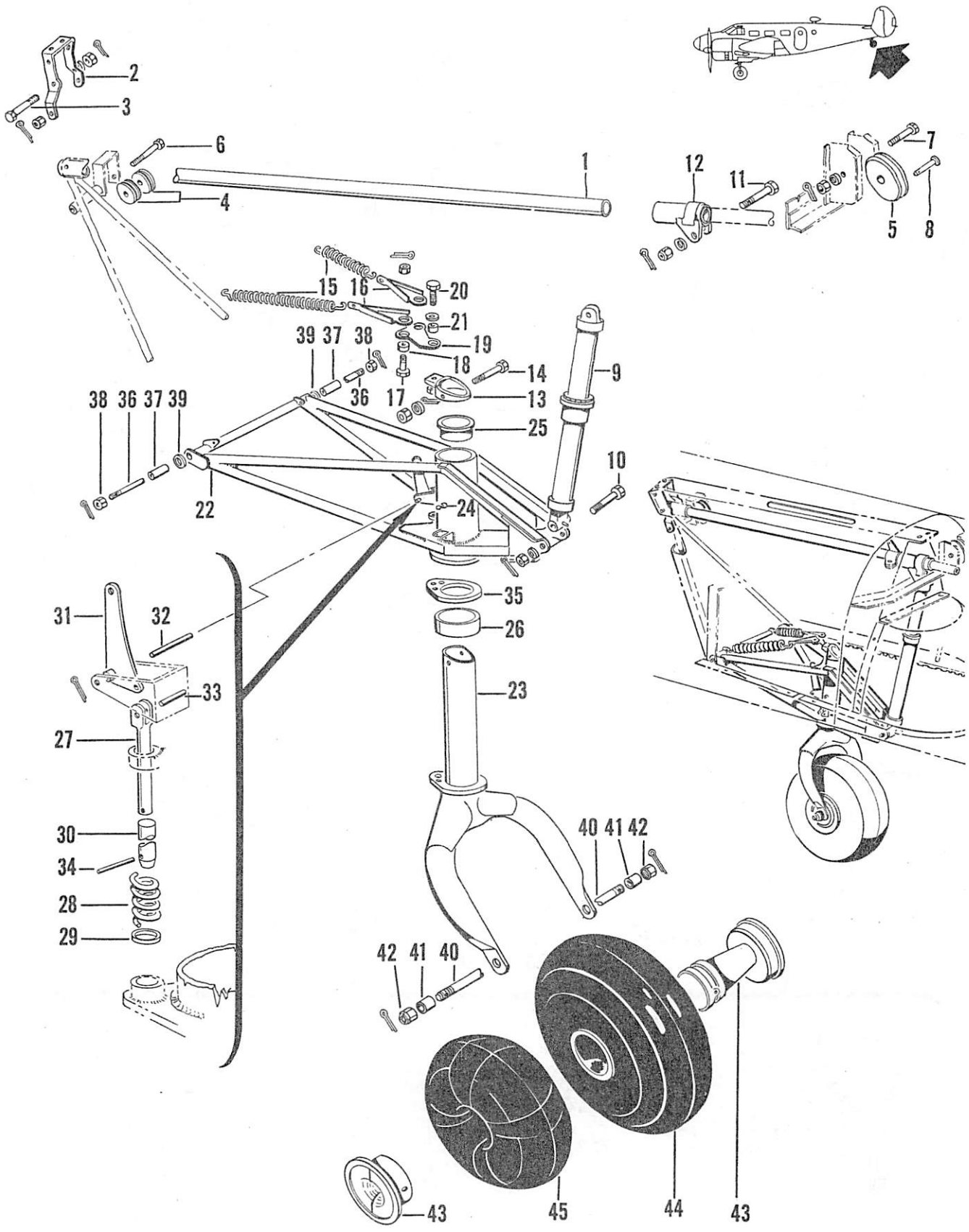

Figure 30. Tail Wheel and Controls Installation (Sheet 1 of 2 Sheets)

C45H-4-30-1

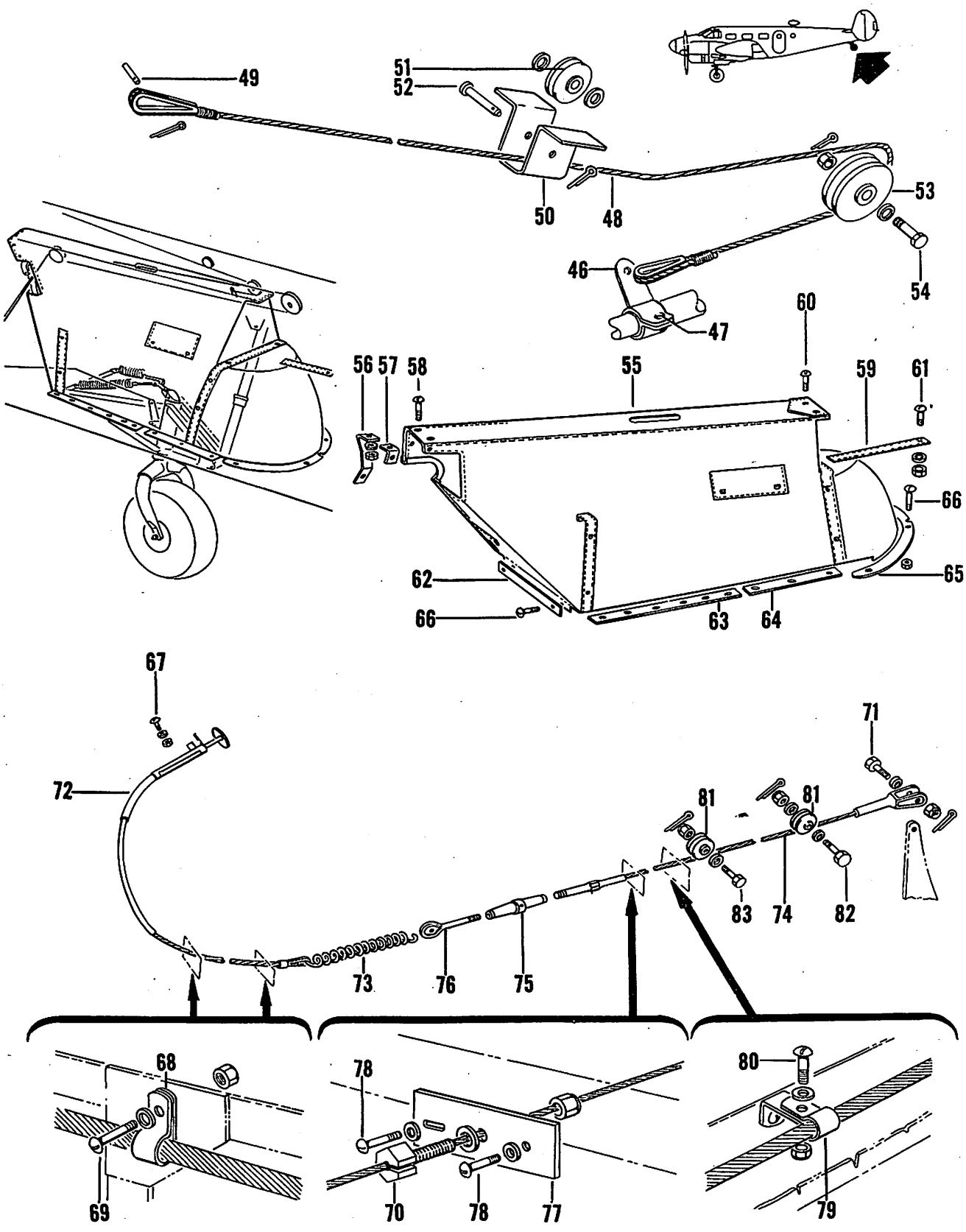

Figure 30. Tail Wheel and Controls Installation (Sheet 2 of 2 Sheets)

C45H-4-30-2

FIG. & INDEX NO.	PART NO.	DESCRIPTION 1 2 3 4 5 6 7	UNITS PER ASSY	USABLE ON CODE
30	644-188660	WHEEL & CONTROLS INSTL,TAIL/SEE FIG. 1 FOR NHA/	1	A-1,B
- 1	694-188696	. TUBE,TAIL WHEEL SLIDE	1	A-1,B
- 2	188667	. BRACKET,TAIL WHEEL BOOT	1	
		/ATTACHING PARTS/		
- 3	AN3-15	. BOLT	2	
	AN960-10	. WASHER	2	
	AN310-3	. NUT	2	
	AN380-2-2	. PIN,COTTER	2	
		----*----		
- 4	AN210-3A	. PULLEY	2	
- 5	AN210-4A	. PULLEY	1	
		/ATTACHING PARTS/		
- 6	AN4-40	. BOLT	1	
- 7	AN4-11	. BOLT	1	
	AN960-416	. WASHER	2	
	AN310-4	. NUT	2	
	AN380-2-2	. PIN,COTTER	3	
- 8	AN392-21	. PIN	1	
		----*----		
- 9	404-188612	. ABSORBER ASSY,TAIL WHEEL SHOCK /SEE FIG. 31/	1	
		/ATTACHING PARTS/		
- 10	AN5-26	. BOLT	1	
- 11	AN5-16	. BOLT	1	
	AN960-516	. WASHER	1	
	AN950-516	. WASHER	1	
	AN310-5	. NUT	2	
	AN380-2-2	. PIN,COTTER	2	
		----*----		
- 12	404-188740	. SLIDE ASSY,TAIL WHEEL	1	
	404-188635	. TRUSS & FORK ASSY,TAIL WHEEL	1	
- 13	404-188678	. . COLLAR ASSY,TAIL WHEEL FORK	1	
		/ATTACHING PARTS/		
- 14	AN3-25A	. . BOLT	1	
	AN960-10	. . WASHER	2	
	AN365-1032	. . NUT	1	
		----*----		
- 15	18871	. . SPRING,TAIL WHEEL ALIGNMENT	2	
- 16	404-188659	. . CLIP,TAIL WHEEL ALIGNMENT SPRING	2	
		/ATTACHING PARTS/		
- 17	AN24-8	. . BOLT	1	
	AN320-4	. . NUT	1	
	AN380-2-2	. . PIN,COTTER	1	
		----*----		
- 18	100801-X6-0185	. . BUSHING	1	
- 19	404-188658	. . PLATE,TAIL WHEEL ALIGNMENT	1	
		/ATTACHING PARTS/		
- 20	AN4-5	. . BOLT	1	
	AN960-416	. . WASHER	1	
	AN320-4	. . NUT	1	
	AN380-2-2	. . PIN,COTTER	1	
		----*----		
- 21	100801-X6-0185	. . BUSHING	1	
- 22	404-188680	. . TRUSS ASSY,TAIL WHEEL	1	
- 23	404-188675	. . FORK ASSY,TAIL WHEEL	1	
- 24	NAS2-101A	. . LUBRICATOR,TAIL WHEEL FORK	1	
- 25	404-188687	. . BEARING,TAIL WHEEL FORK ASSY	1	
- 26	404-188698	. . BEARING,TAIL WHEEL FORK ASSY	1	
- 27	188651	. . LINK,TAIL WHEEL SWIVEL LOCK	1	
- 28	100943-063-017-104-4	. . SPRING,TAIL WHEEL SWIVEL LOCK	1	
- 29	100951-X063-016-020	. . WASHER,TAIL WHEEL SWIVEL LOCK	1	
- 30	404-188683	. . PIN,TAIL WHEEL SWIVEL LOCK	1	

FIG. & INDEX NO.	PART NO.	DESCRIPTION 1 2 3 4 5 6 7	UNITS PER ASSY	USABLE ON CODE
30 - 31	18865-14	• • LEVER,TAIL WHEEL SWIVEL LOCK.	1	A-1,B
		/ATTACHING PARTS/		
- 32	AN393-17	• • PIN	1	
	AN380-2-2	• • PIN,COTTER.	1	
- 33	102809-A125-011	• • PIN	1	
- 34	102809-A125-022	• • PIN	1	
		----*----		
- 35	404-188699	• • PLATE,TAIL WHEEL FORK COLUMN SWIVEL LOWER •	1	
- 36	404-188639	• AXLE,TAIL WHEEL TRUSS	1	
- 37	404-188638	• BUSHING,TAIL WHEEL AXLE	2	
		/ATTACHING PARTS/		
- 38	AN310-8	• NUT	1	
- 39	100951-X063-017-100	• WASHER.	1	
	AN380-3-4	• PIN,COTTER.	1	
		----*----		
- 40	404-188677	• AXLE,TAIL WHEEL	1	
- 41	404-188694	• SLEEVE,TAIL WHEEL AXLE.	2	
		/ATTACHING PARTS/		
	AN380-5-10	• PIN,COTTER.	1	
- 42	AN7502-16	• NUT	1	
		----*----		
- 43	D3-180-M	• WHEEL,TAIL /74080/.	1	
- 44	NO NUMBER	• TIRE,14.50-8 PLY SMOOTH CONTOUR/73842/ /GFAE/	1	
- 45	14.50	• TUBE,REGULAR /73842/.	1	
	694-188668	• CORD ASSY	1	A-1,B
- 46	694-188668-6	• • SUPPORT,TAIL WHEEL ASSIST SHOCK	1	
		/ATTACHING PARTS/		
- 47	AN4-6	• • BOLT.	1	
	AN310-4	• • NUT	1	
	AN380-2-4	• • PIN,COTTER.	1	
		----*----		
- 48	694-188668-2	• • CORD,TAIL WHEEL ASSIST SHOCK.	1	
		/ATTACHING PARTS/		
- 49	AN393-21	• • PIN	1	
	AN380-2-2	• • PIN,COTTER.	1	
		----*----		
- 50	404-188656	• BRACKET,SHOCK CORD PULLEY	1	
- 51	404-188657	• PULLEY,TAIL WHEEL SHOCK CORD.	1	A-1,B
		/ATTACHING PARTS/		
- 52	AN394-23	• PIN	1	
	AN380-2-2	• PIN,COTTER.	1	
	AN960-416	• WASHER.	2	
		----*----		
- 53	404-188663	• PULLEY,TAIL WHEEL SHOCK CORD.	1	A-1,B
		/ATTACHING PARTS/		
- 54	AN4-10	• BOLT.	1	
	AN960-416	• WASHER.	1	
	AN310-4	• NUT	1	
	AN380-2-4	• PIN,COTTER.	1	
		----*----		
- 55	404-188665	• BOOT ASSY,TAIL WHEEL SLIDE COVER.	1	
- 56	188657	• CLIP,TAIL WHEEL BOOT.	1	
- 57	188655	• CLIP,TAIL WHEEL BOOT.	1	
		/ATTACHING PARTS/		
- 58	AN526-632-8	• SCREW	5	
	AN960-6	• WASHER.	5	
	AN365-632	• NUT	5	
		----*----		
- 59	188673	• STRIP,TAIL WHEEL BOOT HOLD DOWN	1	
		/ATTACHING PARTS/		
- 60	AN526-632-8	• SCREW	2	
- 61	AN526-632-6	• SCREW	1	
	AN960-6	• WASHER.	3	
	AN365-632	• NUT	3	
		----*----		

FIG. & INDEX NO.	PART NO.	DESCRIPTION 1 2 3 4 5 6 7	UNITS PER ASSY	USABLE ON CODE
30 - 62	404-188660-2	. STRIP,TAIL WHEEL BOOT HOLD DOWN	1	A-1,B
- 63	404-188660-6	. STRIP,TAIL WHEEL BOOT HOLD DOWN	2	A-1,B
- 64	404-188660-4	. STRIP,TAIL WHEEL BOOT HOLD DOWN	2	A-1,B
- 65	404-188669	. STRIP,TAIL WHEEL BOOT HOLD DOWN	1	
		/ATTACHING PARTS/		
- 66	AN526-632-6	. SCREW	24	
	AN365-632	. NUT	4	
		----*----		
	804-188650	. CABLE ASSY,TAIL WHEEL LOCK	1	
		/ATTACHING PARTS/		
- 67	NAS387-832-8	. SCREW	2	
	AN960-8	. WASHER	2	
	AN365-832	. NUT	2	
- 68	AN742-4	. CLIP	2	
- 69	AN520-10-8	. SCREW	2	
	AN960-10	. WASHER	2	
	AN365-1032	. NUT	2	
- 70	S-123	. BUSHING	1	
	AN365-624	. NUT	1	
	AN960-616	. WASHER	1	
- 71	AN3-5	. BOLT	1	
	AN960-10	. WASHER	1	
	AN310-3	. NUT	1	
	AN380-2-2	. PIN,COTTER	1	
		----*----		
- 72	804-188651	. . CONTROL ASSY,TAIL WHEEL LOCK	1	
- 73	106238	. . SPRING,TAIL WHEEL LOCK	1	
	804-188650-2	. . CABLE ASSY,TAIL WHEEL LOCK	1	
- 74	NAS302-25-2237	. . . CABLE,TAIL WHEEL LOCK	1	A-1,B
- 75	AN155-8S	. . . BARREL	1	
- 76	AN170-8RS	. . . EYE	1	
- 77	188666	. SUPPORT,TAIL WHEEL LOCK CABLE	1	
		/ATTACHING PARTS/		
- 78	AN526-1032-8	. SCREW	2	
	AN960-10	. WASHER	2	
		----*----		
- 79	188671	. BRACKET,TAIL WHEEL LOCK CABLE	1	
		/ATTACHING PARTS/		
- 80	AN515-8-7	. SCREW	1	
	AN365-832	. NUT	1	
	AN960-8	. WASHER	1	
		----*----		
- 81	AN210-1A	. PULLEY	2	
		/ATTACHING PARTS/		
- 82	AN3-7	. BOLT	1	
- 83	AN3-6	. BOLT	1	
	AN960-10	. WASHER	3	
	AN310-3	. NUT	2	
	AN380-2-2	. PIN,COTTER	2	
		----*----		

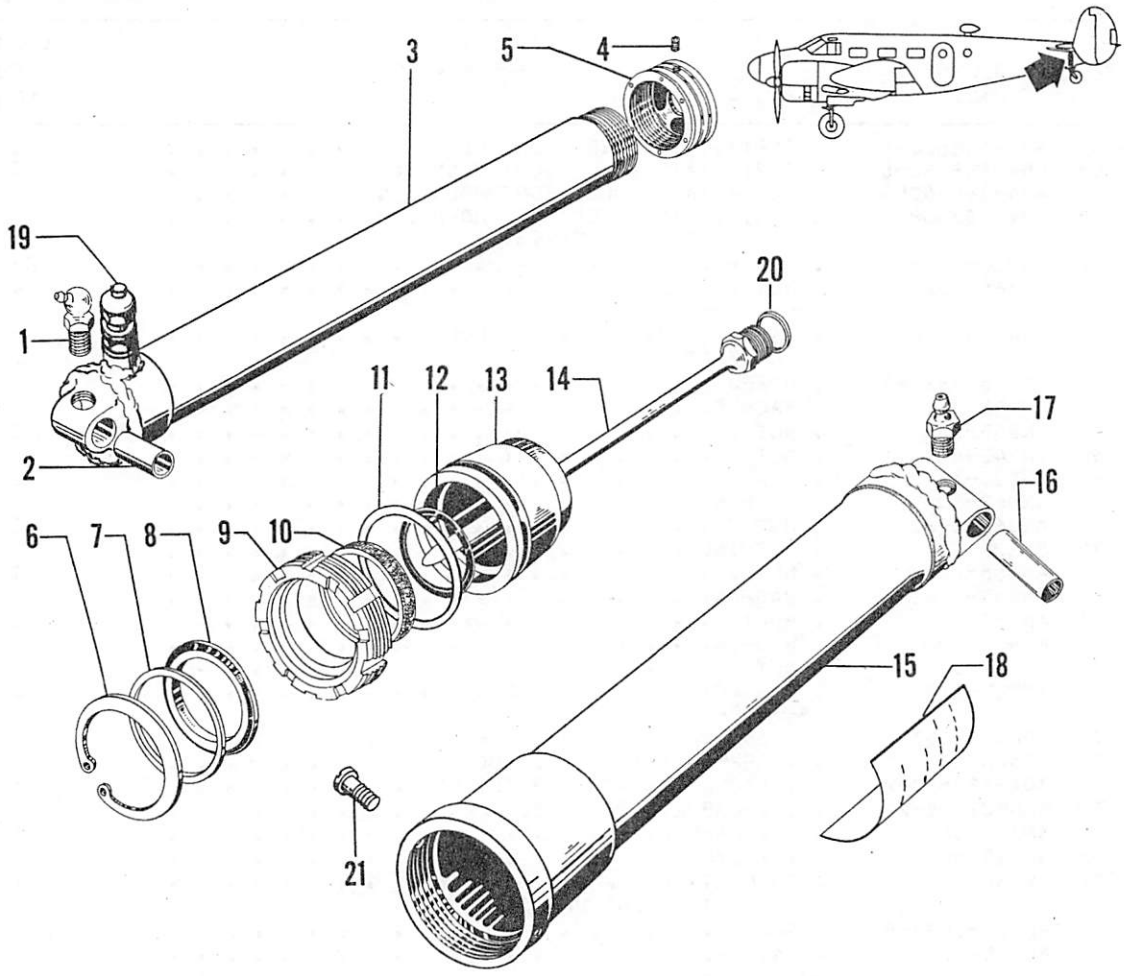

Figure 31. Tail Wheel Shock Absorber Assembly

C45H-4-31

FIG. & INDEX NO.	PART NO.	DESCRIPTION 1 2 3 4 5 6 7	UNITS PER ASSY	USABLE ON CODE
31	404-188612	ABSORBER ASSY,TAIL WHEEL SHOCK. . . . . /SEE FIG. 30 FOR NHA/	REF	
- 1	AN286-3	. FITTING,GREASE.	1	
- 2	188615-1	. BUSHING,TAIL WHEEL SHOCK.	1	
- 3	188602	. PISTON,TAIL WHEEL SHOCK	1	
- 4	NO NUMBER	. SCREW,1/4-20 X 1/4 INCH ALLEN HEAD.	1	
- 5	188605	. HEAD,TAIL WHEEL SHOCK PISTON.	1	
- 6	404-188618	. RING,SNAP	1	
- 7	734-188622	. SPACER,TAIL WHEEL SHOCK WIPER RING.	1	
- 8	AN6231-17	. RING,WIPER.	1	
- 9	734-188623	. NUT,PACKING	1	
- 10	404-188619	. PAD,FELT.	1	
- 11	AN6230-4	. GASKET.	1	
- 12	AN6227-27	. PACKING,O RING.	1	
- 13	734-188620	. ADAPTER,SHOCK ABSORBER PISTON	1	
- 14	188608	. PIN,METERING.	1	
- 15	188601	. CYLINDER,TAIL WHEEL SHOCK	1	
- 16	188615-2	. BUSHING,SHOCK ASSY.	1	
- 17	AN286-1	. FITTING,GREASE.	1	
- 18	694-180023	. PLACARD,TAIL WHEEL SHOCK.	1	
- 19	AN6287-1	. VALVE ASSY.	1	
- 20	188616	. WASHER.	1	
- 21	AN501A10-4	. SCREW	1	

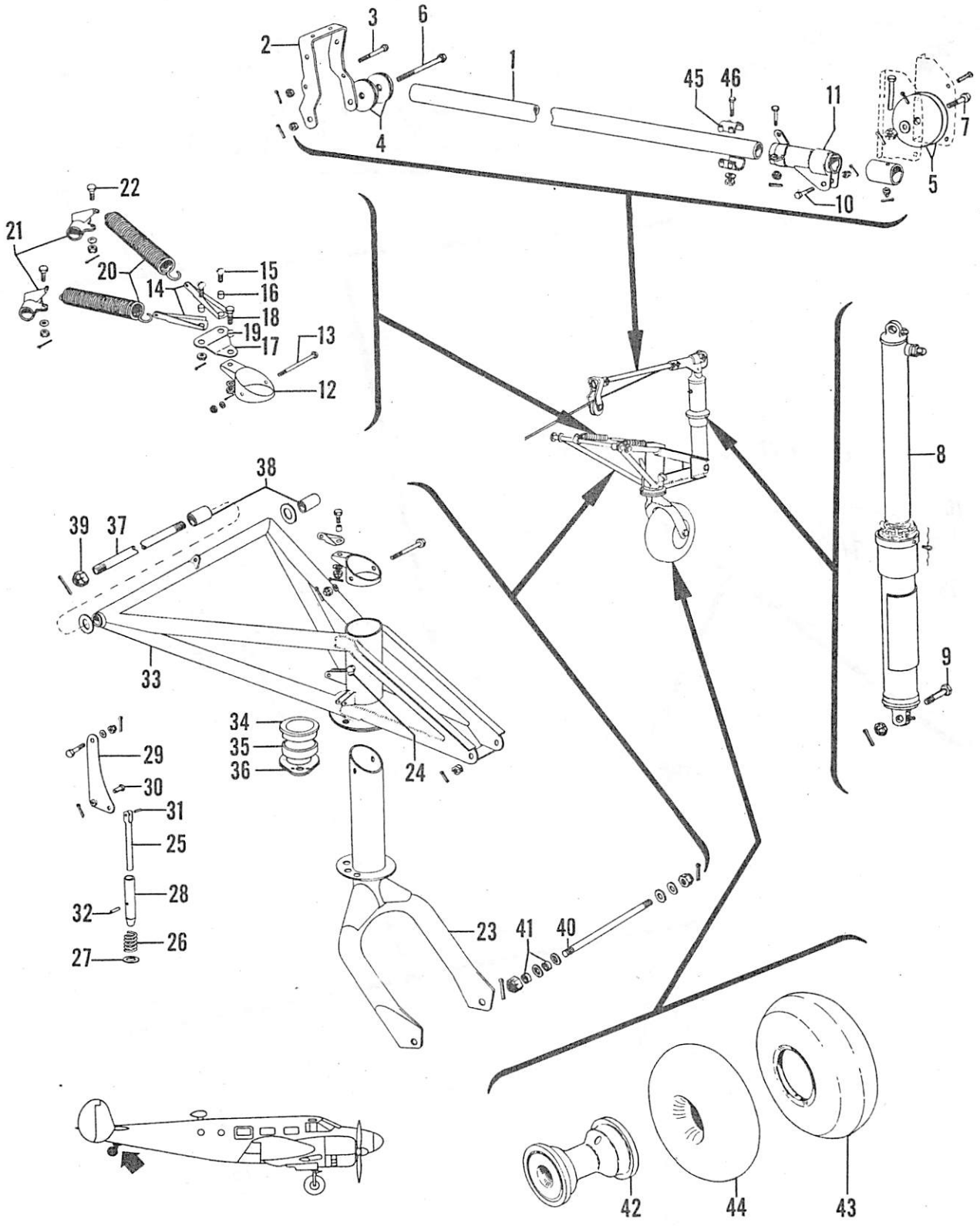

Figure 32. Tail Wheel and Controls Installation (Sheet 1 of 2 Sheets)

C45H-4-32-1

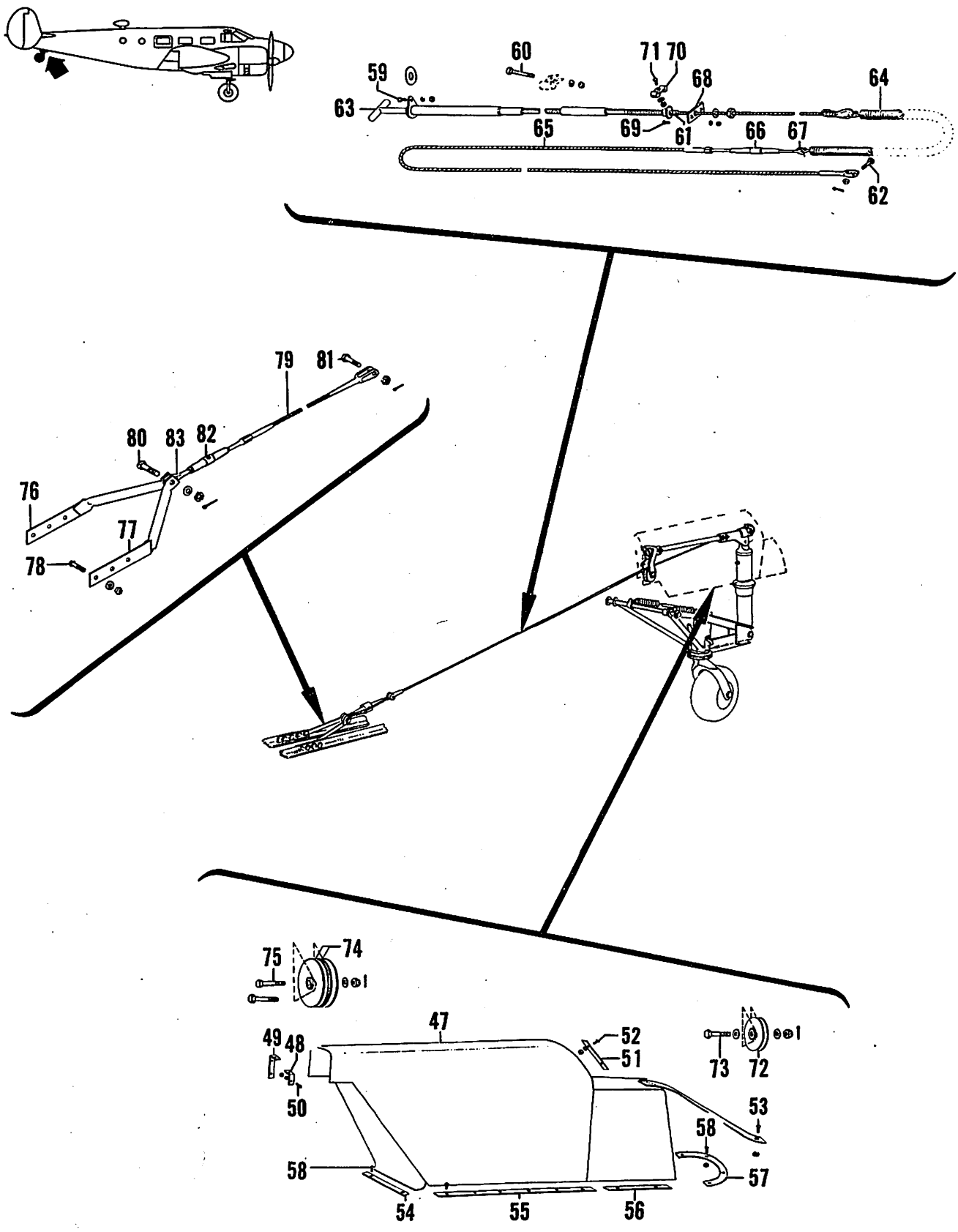

Figure 32. Tail Wheel and Controls Installation (Sheet 2 of 2 Sheets)

C45H-4-32-2

FIG. & INDEX NO.	PART NO.	DESCRIPTION 1 2 3 4 5 6 7	UNITS PER ASSY	USABLE ON CODE
32	894-188660	CONTROLS INSTL,TAIL WHEEL /SEE FIG. 1 FOR NHA/.	1	A-2
- 1	404-188696	. TUBE,TAIL WHEEL SIDE.	1	A-2
- 2	188667	. BRACKET,TAIL WHEEL BOOT /ATTACHING PARTS/	1	
- 3	AN3-15	. BOLT.	2	
	AN960-10	. WASHER.	2	
	AN310-3	. NUT	2	
	AN380-2-2	. PIN,COTTER.	2	
- 4	AN210-3A	. PULLEY.	2	
- 5	AN210-4A	. PULLEY. /ATTACHING PARTS/	1	
- 6	AN4-40	. BOLT.	1	
- 7	AN4-11	. BOLT.	1	
	AN960-416	. WASHER.	2	
	AN310-4	. NUT	2	
	AN380-2-2	. PIN,COTTER.	2	
	AN392-21	. PIN	3	
- 8	404-188612	. ABSORBER ASSY,TAIL WHEEL SHOCK /SEE FIG. 31/. /ATTACHING PARTS/	1	
- 9	AN5-26/M/	. BOLT.	1	
- 10	AN5-16/M/	. BOLT.	1	
	AN310-5	. NUT	2	
	AN380-2-2	. PIN,COTTER.	2	
- 11	404-188470	. SLIDE ASSY,TAIL WHEEL	1	
	404-188635	. TRUSS & FORK ASSY,TAIL WHEEL.	1	
- 12	404-188678	. . COLLAR ASSY,TAIL WHEEL FORK /ATTACHING PARTS/	1	
- 13	AN3-25A	. . BOLT.	1	
	AN960-10	. . WASHER.	1	
	AN365-1032	. . NUT	1	
- 14	404-188659	. . CLIP,TAIL WHEEL ALIGNMENT SPRING. /ATTACHING PARTS/	2	
- 15	AN24-8	. . BOLT.	1	
- 16	100801-X6-0185	. . BUSHING	1	
	AN320-4	. . NUT	1	
	AN380-2-4	. . PIN,COTTER.	1	
- 17	404-188658	. . CLIP,TAIL WHEEL ALIGNMENT SPRING. /ATTACHING PARTS/	1	
- 18	AN4-5	. . BOLT.	1	
- 19	100801-X6-0185	. . BUSHING	1	
	AN960-416	. . WASHER.	1	
	AN320-4	. . NUT	1	
	AN380-2-2	. . PIN,COTTER.	1	
- 20	18871	. . SPRING,TAIL WHEEL ALIGNMENT	2	
- 21	404-188664	. . LUG,TAIL WHEEL ALIGNMENT SPRING /ATTACHING PARTS/	2	A-2
- 22	AN4-4	. . BOLT.	1	
	AN960-416	. . WASHER.	1	
	AN310-4	. . NUT	1	
	AN380-2-4	. . PIN,COTTER.	1	
- 23	404-188675	. . FORK ASSY,TAIL WHEEL.	1	
- 24	NAS2-101A	. . LUBRICATOR,TAIL WHEEL	1	
- 25	188651	. . LINK,TAIL WHEEL SWIVEL LOCK	1	
- 26	100943-063-017-104-4	. . SPRING,TAIL WHEEL SWIVEL LOCK	1	

FIG. & INDEX NO.	PART NO.	DESCRIPTION 1 2 3 4 5 6 7	UNITS PER ASSY	USABLE ON CODE
32 - 27	100951-X063-016-020	. . WASHER,TAIL WHEEL SWIVEL LOCK	1	
- 28	404-188683	. . PIN,TAIL WHEEL SWIVEL LOCK.	1	
- 29	18865	. . LEVER,TAIL WHEEL SWIVEL LOCK. . . . . /ATTACHING PARTS/	1	A-2
- 30	AN393-17	. . PIN	1	
	AN380-2-2	. . PIN,COTTER.	1	
- 31	102809-A125-011	. . PIN	1	
- 32	102809-A125-026	. . PIN	1	
		----*----		
	404-188635	. . TRUSS & BEARING ASSY,TAIL WHEEL . . . . . /USE FOR SPARE PART/	1	A-2
- 33	404-188680	. . . TRUSS ASSY,TAIL WHEEL	1	
- 34	404-188687	. . . BEARING,FORK COLUMN SWIVEL UPPER. . . .	1	
- 35	404-188698	. . . BEARING,FORK COLUMN SWIVEL LOWER. . . .	1	
- 36	404-188699	. . . PLATE,TAIL WHEEL FORK COLUMN SWIVEL LOWER	1	
- 37	404-188639	. AXLE,TAIL WHEEL RETRACTING. . . . . /ATTACHING PARTS/	1	
- 38	404-188638	. BUSHING,TAIL WHEEL AXLE	2	
- 39	AN310-8	. NUT	2	
	AN380-3-4	. PIN,COTTER.	2	
	100951-X063-017-100	. WASHER.	2	
		----*----		
- 40	404-188677	. AXLE,TAIL WHEEL . . . . . /ATTACHING PARTS/	1	
- 41	404-188694	. SLEEVE,TAIL WHEEL AXLE.	2	
	AN380-5-10	. PIN,COTTER.	2	
	AN7502-16	. NUT	2	
		----*----		
- 42	D3-180-M	. WHEEL,/74080/	1	
- 43	NO NUMBER	. TIRE,14.50 - 8 PLY SMOOTH CONTOUR /73842/ . . /GFAE/	1	
- 44	14.50	. TUBE,TAIL WHEEL TIRE /73842/.	1	
- 45	734-188662	. CLAMP,TAIL WHEEL TIE DOWN . . . . . /ATTACHING PARTS/	1	A-2
- 46	AN4-15A	. BOLT.	4	
	AN960-416	. WASHER.	4	
	AN365-428	. NUT	4	
		----*----		
- 47	404-188665	. BOOT ASSY,TAIL WHEEL SLIDE COVER.	1	
- 48	188657	. CLIP,TAIL WHEEL BOOT.	1	
- 49	188655	. CLIP,TAIL WHEEL BOOT. . . . . /ATTACHING PARTS/	1	
- 50	AN526-632-8	. SCREW	5	
	AN960-6	. WASHER.	5	
	AN365-632	. NUT	5	
		----*----		
- 51	188673	. STRIP,TAIL WHEEL BOOT HOLD DOWN . . . . . /ATTACHING PARTS/	1	
- 52	AN526-632-8	. SCREW	2	
- 53	AN526-632-6	. SCREW	1	
	AN960-6	. WASHER.	3	
	AN365-632	. NUT	3	
		----*----		
- 54	894-188660-2	. STRIP,TAIL WHEEL BOOT HOLD DOWN	1	A-2
- 55	894-188660-6	. STRIP,TAIL WHEEL BOOT HOLD DOWN	2	A-2
- 56	894-188660-4	. STRIP,TAIL WHEEL BOOT HOLD DOWN	2	A-2
- 57	404-188669	. STRIP,TAIL WHEEL BOOT HOLD DOWN . . . . . /ATTACHING PARTS/	1	
- 58	AN526-632-6	. SCREW	24	
		----*----		

FIG. & INDEX NO.	PART NO.	DESCRIPTION 1 2 3 4 5 6 7	UNITS PER ASSY	USABLE ON CODE
32	804-188650	CABLE ASSY,TAIL WHEEL LOCK	1	
		/ATTACHING PARTS/		
- 59	NAS387-832-8	SCREW	2	
	AN960-8	WASHER	2	
	AN365-832	NUT	2	
- 60	AN520-10-8	SCREW	2	
	AN960-10	WASHER	3	
	AN365-1032	NUT	2	
- 61	S-123	BUSHING	1	
	AN365-624	NUT	1	
	AN960-616	WASHER	1	
- 62	AN3-5	BOLT	1	
	AN310-3	NUT	1	
	AN380-2-2	PIN,COTTER	1	
		----*----		
- 63	804-188651	. CONTROL ASSY,TAIL WHEEL LOCK	1	
- 64	106238	. SPRING,TAIL WHEEL LOCK	1	
	NO NUMBER	. FERRULE,#14 WIRE	1	
	804-188650-2	. CABLE ASSY,TAIL WHEEL LOCK	1	
- 65	107941-L22315	. . CABLE,TAIL WHEEL LOCK	1	A-2
- 66	AN155-8S	. . BARREL	1	
- 67	AN170-8RS	. . EYE	1	
- 68	188666	SUPPORT,TAIL WHEEL LOCK CABLE	1	
		/ATTACHING PARTS/		
- 69	AN526-1032-8	SCREW	2	
	AN960-10	WASHER	2	
		----*----		
- 70	188671	BRACKET,TAIL WHEEL LOCK CABLE	1	
		/ATTACHING PARTS/		
- 71	AN515-8-7	SCREW	1	
	AN960-8	WASHER	1	
	AN365-832	NUT	1	
		----*----		
- 72	AN210-1A	PULLEY	1	
		/ATTACHING PARTS/		
- 73	AN3-7	BOLT	1	
	AN960-10	WASHER	1	
	AN310-3	NUT	1	
	AN380-2-2	PIN,COTTER	1	
		----*----		
- 74	AN210-3A	PULLEY	2	
		/ATTACHING PARTS/		
- 75	S-126-34	BOLT	1	
	S-126-36	BOLT	1	
	AN960-416	WASHER	2	
	AN320-4	NUT	2	
	AN380-2-2	PIN,COTTER	2	
		----*----		
- 76	734-188663	YOKE ASSY,TAIL WHEEL TIE DOWN LH	1	A-2
- 77	734-188663-1	YOKE ASSY,TAIL WHEEL TIE DOWN RH	1	A-2
		/ATTACHING PARTS/		
- 78	AN520-10-10	SCREW	3	
	AN960A10	WASHER	3	
	AN365-1032	NUT	3	
		----*----		
- 79	NAS304-37-0857	CABLE ASSY,TAIL WHEEL TIE DOWN	1	A-2
		/ATTACHING PARTS/		
- 80	AN4-10	BOLT	1	
	AN310-4	NUT	1	
	AN380-2-3	PIN,COTTER	1	
	AN960-416	WASHER	1	
- 81	AN3DD6	BOLT	1	
	AN310-3	NUT	1	
	AN380-2-2	PIN,COTTER	1	
		----*----		
- 82	AN155-32S	BARREL	1	
- 83	AN165-32S	EYE	1	A-2

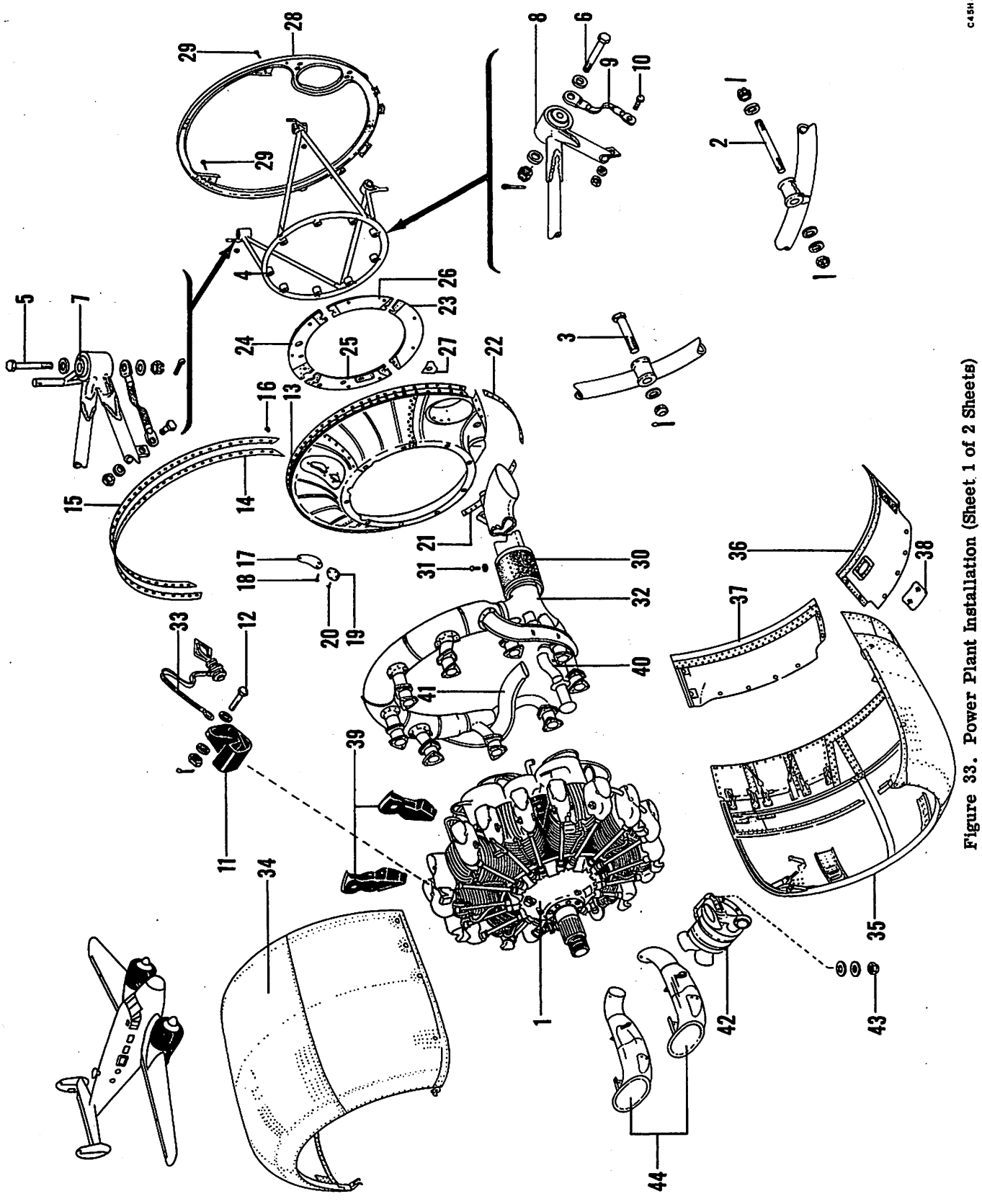

Figure 33. Power Plant Installation (Sheet 1 of 2 Sheets)

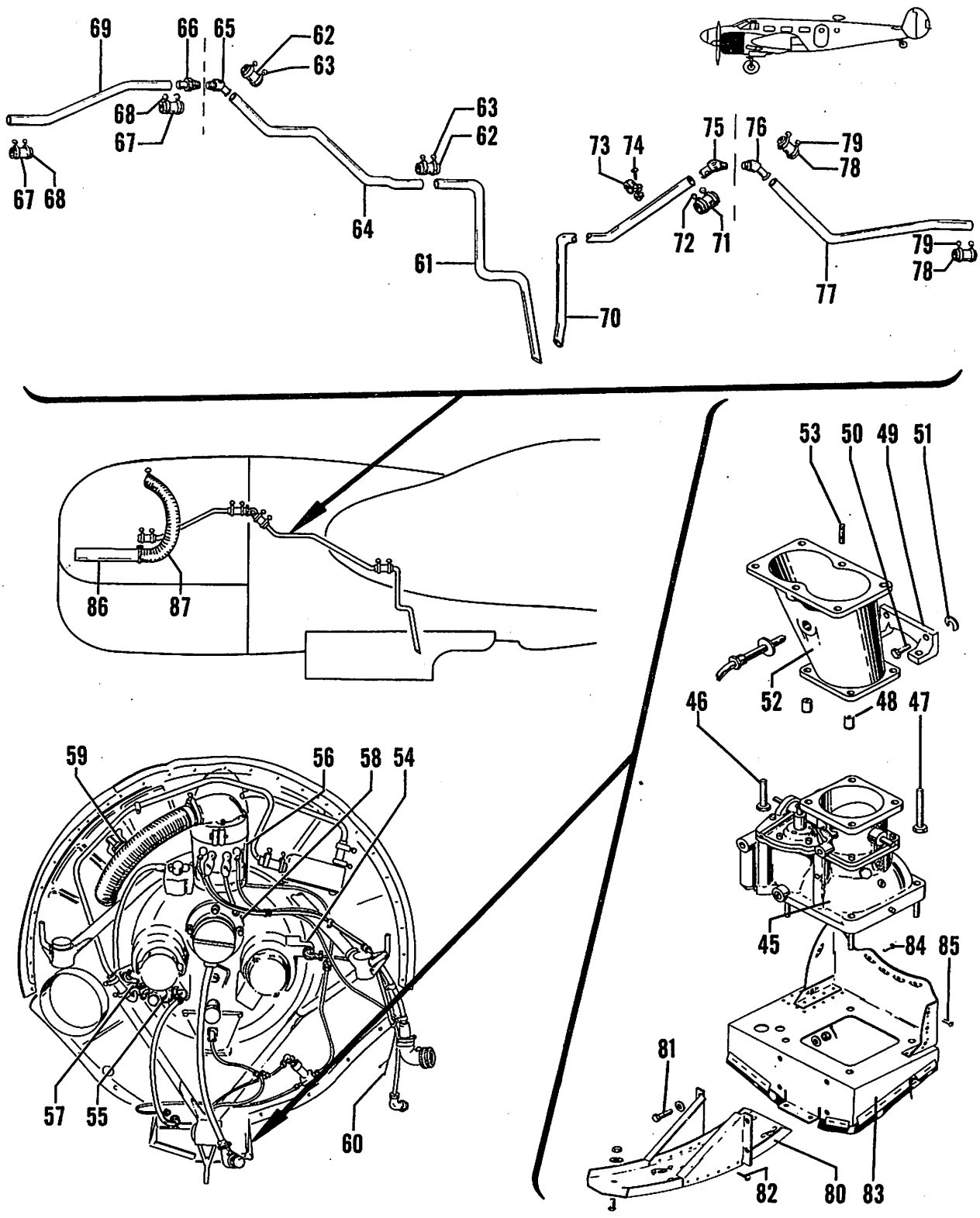

Figure 33. Power Plant Installation (Sheet 2 of 2 Sheets)

C45H-4-33-2

FIG. & INDEX NO.	PART NO.	DESCRIPTION 1 2 3 4 5 6 7	UNITS PER ASSY	USABLE ON CODE
33	694-189000	POWER PLANT INSTL,LH & RH /SEE FIG. 1 FOR NHA/	1	A-1,B
	694-189002-1	POWER PLANT INSTL,LH /SEE FIG. 1 FOR NHA/	1	A-17
	694-189002-3	POWER PLANT INSTL,LH /SEE FIG. 1 FOR NHA/	1	A-18
	694-189002-2	POWER PLANT INSTL,RH /SEE FIG. 1 FOR NHA/	1	A-17
	694-189002-4	POWER PLANT INSTL,RH /SEE FIG. 1 FOR NHA/	1	A-18
- 1	R985-AN-14B	. ENGINE,/SPECIFICATION AN2035/ /77445/ /GFAE/ /ATTACHING PARTS/	1	
- 2	4-189125	. STUD,ENGINE MOUNT	1	
- 3	AN7-47/M/	. BOLT	8	
	AN960-716	. WASHER	11	
	AN310-7	. NUT	10	
	AN380-3-3	. PIN,COTTER	2	
- 4	18S9100	. MOUNT ASSY,ENGINE	1	A-19,B
	18S9100-29	. MOUNT ASSY,ENGINE /ATTACHING PARTS/	1	A-20
- 5	AN7-36/M/	. BOLT	2	
- 6	AN7-43/M/	. BOLT	1	
	AN960-716	. WASHER	6	
	AN310-7	. NUT	3	
	AN380-3-3	. PIN,COTTER	3	
- 7	189106	. . BUSHING,ENGINE MOUNT SUPPORT	2	A-19,B
	J-5385-1	. . BUSHING,ENGINE MOUNT SUPPORT /76005/	2	A-20
- 8	189105	. . BUSHING,ENGINE MOUNT SUPPORT	1	A-19,B
	J-5384-1	. . BUSHING,ENGINE MOUNT SUPPORT /76005/	1	A-20
- 9	404-189102	. . STRIP,BONDING /ATTACHING PARTS/	3	
- 10	AN4-4A	. . BOLT	1	
	AN960-416	. . WASHER	1	
	AN365-428	. . NUT	1	
- 11	18S5918	. BRACKET,COWL SUPPORT FORE & AFT /ATTACHING PARTS/	9	
- 12	AN4-11	. BOLT	2	
	AN960-416	. WASHER	4	
	AN960-416L	. WASHER	1	
	AN310-4	. NUT	2	
	AN380-2-2	. PIN,COTTER	2	
	694-185910-42	. COWLING ASSY,ENGINE INNER LH	1	
	694-185910-43	. COWLING ASSY,ENGINE INNER RH	1	
- 13	694-185910-36	. . SPOTWELD ASSY,COWLING LH	1	
	694-185910-37	. . SPOTWELD ASSY,COWLING RH	1	
- 14	694-185896-2	. . SEAL,ENGINE INNER COWLING	1	
- 15	694-185896-4	. . SEAL,ENGINE INNER COWLING /ATTACHING PARTS/	2	
- 16	49380-1	. . FASTENER,/61864/	76	
- 17	694-185910-20	. . PLATE,ENGINE INNER COWLING /ATTACHING PARTS/	1	
- 18	AN526-632-6	. . SCREW	3	
	AN372-832	. . NUT	3	
- 19	694-185910-24	. . COVER,ENGINE INNER COWLING /ATTACHING PARTS/	1	
- 20	AN526-832-6	. . SCREW	4	
	AN372-832	. . NUT	4	
- 21	694-185910-38	. . STRIP	1	
- 22	694-185910-39	. . STRIP	1	
	694-189001	. SEAL INSTL,ENGINE	1	
- 23	84-185880	. . SEGMENT ASSY,INNER COWLING LOWER	1	

FIG. & INDEX NO.	PART NO.	DESCRIPTION 1 2 3 4 5 6 7	UNITS PER ASSY	USABLE ON CODE
33 - 24	84-185881	. . SEGMENT ASSY,INNER COWLING UPPER LH	1	
	84-185886	. . SEGMENT ASSY,INNER COWLING UPPER RH	1	
- 25	84-185882	. . SEGMENT ASSY,INNER COWLING INBD RH.	1	
	84-185885	. . SEGMENT ASSY,INNER COWLING OUTBD RH	1	
- 26	84-185883	. . SEGMENT ASSY,INNER COWLING OUTBD LH	1	
	84-185884	. . SEGMENT ASSY,INNER COWLING INBD RH.	1	
- 27	694-185899	. . SEAL,SCAVENGER PUMP LINE INNER COWLING. . .	1	
- 28	804-185940	. RING ASSY,COWLING SUPPORT FORMER. . . . . /ATTACHING PARTS/	1	
- 29	AN3-11	. BOLT.	3	
	AN960-10	. WASHER.	3	
	AN310-3	. NUT	3	
	AN380-2-2	. PIN,COTTER.	3	
		-----*-----		
	18S9213	. SHROUD INSTL,EXHAUST TAIL PIPE.	1	
- 30	18S9213-8L	. . SHROUD ASSY,EXHAUST TAIL PIPE LH.	1	
	18S9213-8R	. . SHROUD ASSY,EXHAUST TAIL PIPE RH. . . . . /ATTACHING PARTS/	1	
- 31	AN530-8-8	. . SCREW	11	
	AN960-8L	. . WASHER.	11	
		-----*-----		
- 32	18S9200L-500	. SYSTEM,ENGINE EXHAUST LH /SEE FIG. 34/. . . .	1	
	18S9200R-500	. SYSTEM,ENGINE EXHAUST RH /SEE FIG. 34/. . . .	1	
- 33	105947	. BONDING ASSY,ENGINE COWLING	3	
- 34	185901*	. COWLING ASSY,ENGINE UPPER LH /SEE FIG. 35/. .	1	
	84-185905**	. COWLING ASSY,ENGINE UPPER LH /SEE FIG. 35/. .	1	
	185901-500*	. COWLING ASSY,ENGINE UPPER RH /SEE FIG. 35/. .	1	
	84-185905-500**	. COWLING ASSY,ENGINE UPPER RH /SEE FIG. 35/. .	1	
- 35	185903	. COWLING ASSY,ENGINE LOWER /SEE FIG. 35/ . . .	2	
	84-185970	. COWLING ASSY,ENGINE LOWER /SEE FIG. 35/ . . .	2	
- 36	18S5850P-16	. SHEET ASSY,ACCESSORY COMPT WRAPPER OUTBD LH .	1	
	18S5850P-19	. SHEET ASSY,ACCESSORY COMPT WRAPPER OUTBD RH .	1	
- 37	18S5850P-17	. SHEET ASSY,ACCESSORY COMPT WRAPPER INBD LH. .	1	
	18S5850P-18	. SHEET ASSY,ACCESSORY COMPT WRAPPER INBD RH. .	1	
- 38	18S5850P-21	. . DOOR ASSY,WRAPPER SHEET /OUTBD ONLY/. . . .	1	
- 39	189110-1	. BAFFLE INSTL,ENGINE /SEE FIG. 39/	1	
- 40	54-189216	. TUBE INSTL,AIR INTAKE INTENSIFIER . . . . . /SEE FIG. 34/	1	
- 41	189174	. MUFF INSTL,CARBURETOR HEATER LH /SEE FIG. 36/	1	
	189175	. MUFF INSTL,CARBURETOR HEATER RH /SEE FIG. 36/	1	
- 42	18S9150	. SCOOP ASSY,CARBURETOR AIR /SEE FIG. 38/ . . .	1	A-1,B
	18S9150-4	. SCOOP ASSY,CARBURETOR AIR /SEE FIG. 38/ . . . /ATTACHING PARTS/	1	A-2
- 43	AN364-524	. NUT	4	
	AN365-524	. NUT	4	
	AN960-516L	. WASHER.	4	
	AN960-516	. WASHER.	4	
		-----*-----		
- 44	804-189131	. DUCTS INSTL,CARBURETOR AIR /SEE FIG. 38/. . .	1	

*THESE PARTS ARE INTERCHANGEABLE & ARE TO BE USED WITH 185903 LOWER COWLING ASSY.

**THESE PARTS ARE INTERCHANGEABLE & ARE TO BE USED WITH 84-185970 LOWER COWLING ASSY.

FIG. & INDEX NO.	PART NO.	DESCRIPTION 1 2 3 4 5 6 7	UNITS PER ASSY	USABLE ON CODE
33 - 45	NO NUMBER	• CARBURETOR,/MODEL NAR9B-19/ /06840/ /GFAE/• •	1	A-1,B
	NO NUMBER	• CARBURETOR,/MODEL NAR9B-19/ /06840/ /GFAE/• • /ATTACHING PARTS/	1	A-2
- 46	AN5-12	• BOLT• • • • • • • • • • • • • • • • • • • •	2	
	AN960-616	• WASHER• • • • • • • • • • • • • • • • • • • •	4	
- 47	AN76A-12	• BOLT• • • • • • • • • • • • • • • • • • • •	2	
	AN960-516	• WASHER• • • • • • • • • • • • • • • • • • • •	2	
	AN310-5	• NUT •	2	
	AN380-2-2	• PIN,COTTER• • • • • • • • • • • • • • • • • •	2	
		----*----		
- 48	18S9184	• BUSHING,CARBURETOR ADAPTER• • • • • • • • •	2	
- 49	18S9182	• BRACE,CARBURETOR• • • • • • • • • • • • • • /ATTACHING PARTS/	1	
- 50	18S9183-1	• BOLT• • • • • • • • • • • • • • • • • • • •	2	
	AN960-516	• WASHER• • • • • • • • • • • • • • • • • • • •	2	
		----*----		
- 51	103053	• SHIM,CARBURETOR BRACE • • • • • • • • • • •	AR	
- 52	18S9181	• ADAPTER,CARBURETOR EXTENSION• • • • • • • • /ATTACHING PARTS/	1	
- 53	18S9186	• STUD,CARBURETOR ADAPTER • • • • • • • • • •	1	
	AN960-516	• WASHER• • • • • • • • • • • • • • • • • • • •	6	
	AN355-5	• NUT •	2	
	AN365-524	• NUT •	4	
	AN380-3-3	• PIN,COTTER• • • • • • • • • • • • • • • • • •	1	
		----*----		
- 54	AN5531-2	• GENERATOR,TACHOMETER• • • • • • • • • • • •	1	
- 55	NO NUMBER	• PUMP,FUEL /TYPE G6/ /GFAE/• • • • • • • • •	1	
- 56	30E16-1-A	• GENERATOR,/100 AMPERE/ /GFAE/ • • • • • • • /ATTACHING PARTS/	1	
	AN363-524	• NUT •	4	
		----*----		
- 57	NO NUMBER	• PUMP,VACUUM /TYPE B-12/ /SPECIFICATION 28391/ /GFAE/	1	
- 58	NO NUMBER	• STARTER,ENGINE /TYPE J-1/ • • • • • • • • • • /SPECIFICATION 32282,24 VOLT/ /GFAE/	1	
	180009	• PLACARD,STARTER • • • • • • • • • • • • • • •	1	
- 59	AN5540-2	• THERMOCOUPLE,HEAD TEMPERATURE /TYPE B-11/ • • /SPECIFICATION AC27971/	1	
- 60	L-71-5	• LEAD ASSY,CYLINDER HEAD TEMPERATURE THERMO-COUPLE/TYPE B-11/ /SPECIFICATION AC27971/ /ATTACHING PARTS/	1	
	AN515-6-6	• SCREW •	2	
	AN935-6	• WASHER• • • • • • • • • • • • • • • • • • • •	2	
	AN960-6	• WASHER• • • • • • • • • • • • • • • • • • • •	2	
		----*----		
	94-189895	• LINE INSTL,NACELLE COMPT CRANKCASE VENT LH• •	1	
- 61	94-189897	• • TUBE,NACELLE COMPT VENT LINE CRANKCASE LH •	1	
- 62	AN884-12-12	• • HOSE,VENT TUBE CONNECTOR• • • • • • • • • •	2	
- 63	FBA-12	• • CLAMP,/66295/ • • • • • • • • • • • • • • •	4	
- 64	189897	• • TUBE,NACELLE COMPT VENT LINE CRANKCASE LH •	1	
- 65	AN844-12D	• • ELBOW,45 DEGREE • • • • • • • • • • • • • •	1	
	94-189892	• LINE INSTL,CRANKCASE VENT ENGINE COMPT LH • •	1	
- 66	AN840-12D	• • ADAPTER,HOSE• • • • • • • • • • • • • • • •	1	
- 67	AN844-12-12	• • HOSE,VENT TUBE CONNECTOR• • • • • • • • • •	2	
- 68	AN737-38	• • CLAMP • • • • • • • • • • • • • • • • • • •	3	
	AN737-34	• • CLAMP • • • • • • • • • • • • • • • • • • •	1	
- 69	94-189494	• • TUBE,ENGINE COMPARTMENT CRANKCASE VENT LH •	1	
	94-189900	• LINE INSTL,NACELLE COMPT CRANKCASE VENT RH• •	1	A-1,B
	404-189900	• LINE INSTL,NACELLE COMPT CRANKCASE VENT RH• •	1	A-2
- 70	189906	• • TUBE,NACELLE COMPARTMENT CRANKCASE VENT RH•	1	A-1,B
	404-189907	• • TUBE,NACELLE COMPARTMENT CRANKCASE VENT RH•	1	A-2
	404-189908	• • TUBE,NACELLE COMPARTMENT CRANKCASE VENT RH•	1	A-2
	AN844-12-15	• • HOSE• • • • • • • • • • • • • • • • • • • •	1	A-2
- 71	AN844-12-12	• • HOSE• • • • • • • • • • • • • • • • • • • •	1	
- 72	FBA-12	• • CLAMP,/66295/ • • • • • • • • • • • • • • •	2	A-1,B
	AN748-38	• • CLAMP • • • • • • • • • • • • • • • • • • •	2	A-2

FIG. & INDEX NO.	PART NO.	DESCRIPTION 1 2 3 4 5 6 7	UNITS PER ASSY	USABLE ON CODE
33 - 73	105933-12	. . CLIP. . . . . /ATTACHING PARTS/	2	
- 74	AN520-10-12	. . SCREW	1	
	AN365-1032	. . NUT	1	
		----*----		
- 75	AN844-12D	. . ELBOW,45 DEGREE	1	
	94-189891	. LINE INSTL,CRANKCASE VENT ENGINE COMPT RH . .	1	
- 76	AN844-12D	. . ELBOW,45 DEGREE	1	
- 77	94-189891-1	. . TUBE,ENGINE COMPARTMENT CRANKCASE VENT RH .	1	
- 78	AN844-12-12	. . HOSE,TUBE VENT CONNECTOR.	2	
- 79	AN737-38	. . CLAMP	3	
	AN737-34	. . CLAMP	1	
- 80	18S5853	. CHANNEL ASSY,WRAPPER SHEET SUPPORT. . . . . /ATTACHING PARTS/	1	
- 81	AN3-4	. BOLT.	4	
	AN960-10	. WASHER.	8	
	AN310-3	. NUT	4	
	AN380-2-2	. PIN,COTTER.	4	
- 82	AN505-8-8	. SCREW	2	
	AN960-8	. WASHER.	2	
	AN365-832	. NUT	2	
		----*----		
- 83	774-185919	. SHIELD ASSY,CARBURETOR INNER COWLING. . . . . /ATTACHING PARTS/	1	
- 84	AN526-832-6	. SCREW	8	
- 85	AN526-832-7	. SCREW	8	
		----*----		
- 86	694-189015	. BLAST ASSY,GENERATOR AIR.	1	
- 87	115099-8-202	. DUCT,GENERATOR AIR.	1	

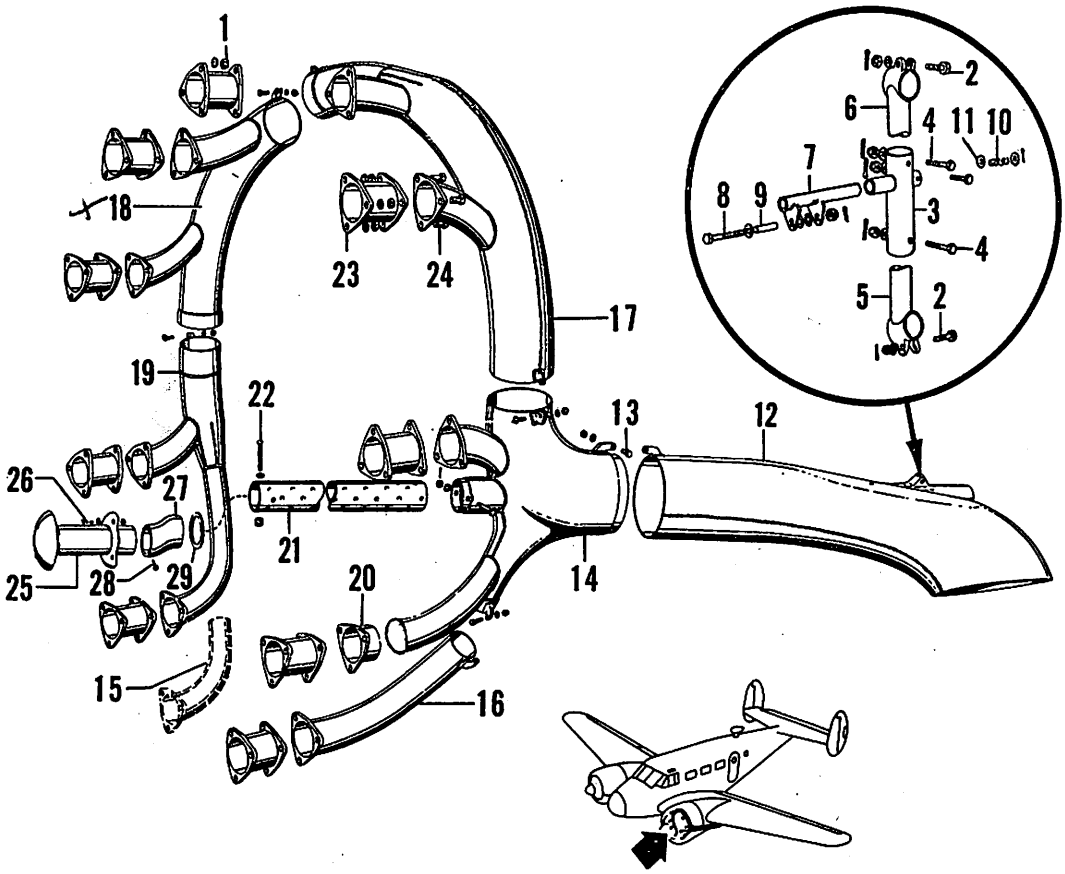

Figure 34. LH & RH Engine Exhaust System Installation C45H-4-34

FIG. & INDEX NO.	PART NO.	DESCRIPTION 1 2 3 4 5 6 7	UNITS PER ASSY	USABLE ON CODE
34	18S9200L-500	EXHAUST INSTL,ENGINE LH /SEE FIG. 33 FOR NHA/	REF	
	18S9200R-500	EXHAUST INSTL,ENGINE RH /SEE FIG. 33 FOR NHA/	REF	
		/ATTACHING PARTS/		
- 1	46A1135-524	NUT	27	
- 4	AN960C516	WASHER	27	
		-----*-----		
	189210L	. BRACKET ASSY,TAIL PIPE EXHAUST LH	1	
	189210R	. BRACKET ASSY,TAIL PIPE EXHAUST RH	1	
		/ATTACHING PARTS/		
- 2	AN4-10	. BOLT	2	
	AN960-416	. WASHER	2	
	AN310-4	. NUT	2	
	AN380-2-2	. PIN,COTTER	2	
		-----*-----		
- 3	189212	. . BRACKET,TAIL PIPE EXHAUST	1	
		/ATTACHING PARTS/		
- 4	AN3-13	. . BOLT	2	
	AN960-10	. . WASHER	2	
	AN310-3	. . NUT	2	
	AN380-2-2	. . PIN,COTTER	2	
		-----*-----		
- 5	189211L	. . CLAMP,TAIL PIPE BRACKET LOWER LH	1	
	189211R	. . CLAMP,TAIL PIPE BRACKET LOWER RH	1	
- 6	189213	. . CLAMP,TAIL PIPE BRACKET UPPER	1	

FIG. & INDEX NO.	PART NO.	DESCRIPTION 1 2 3 4 5 6 7	UNITS PER ASSY	USABLE ON CODE
34 - 7	18S9212-5	. . SHACKLE,TAIL PIPE BRACKET	1	
		/ATTACHING PARTS/		
- 8	AN4-21	. . BOLT.	1	
- 9	100801-X5-1500	. . BUSHING	1	
	AN960-416	. . WASHER.	1	
	AN310-4	. . NUT	1	
	AN380-2-2	. . PIN,COTTER.	1	
		----*----		
- 10	100943-091-017-024-4	. . SPRING,TAIL PIPE EXHAUST BRACKET.	1	
		/ATTACHING PARTS/		
- 11	AN960-816	. . WASHER.	1	
	AN960-816L	. . WASHER.	1	
	AN380-4-3	. . PIN,COTTER.	1	
		----*----		
- 12	189208-2	. PIPE ASSY,EXHAUST SYSTEM TAIL LH.	1	
	189208-3	. PIPE ASSY,EXHAUST SYSTEM TAIL RH.	1	
		/ATTACHING PARTS/		
- 13	AN3-5	. BOLT.	1	
	AN960-10	. WASHER.	1	
	AN310-3	. NUT	1	
	AN380-2-2	. PIN,COTTER.	1	
		----*----		
	18S9200L-28	. EXHAUST ASSY,EXHAUST SYSTEM LH.	1	
	18S9200R-32	. EXHAUST ASSY,EXHAUST SYSTEM RH.	1	
- 14	18S9200L-1	. . SEGMENT ASSY,EXHAUST SYSTEM OUTBD LH. . .	1	
	18S9200R-1	. . SEGMENT ASSY,EXHAUST SYSTEM OUTBD RH. . .	1	
- 15	18S9209	. . ELBOW,#5 CYLINDER EXHAUST SYSTEM.	1	
- 16	18S9200R-27	. . ELBOW,#6 CYLINDER EXHAUST /RH ONLY/ . . .	1	
- 17	18S9200L-3	. . SEGMENT ASSY,EXHAUST SYSTEM OUTBD LH. . .	1	
	18S9200R-4	. . SEGMENT ASSY,EXHAUST SYSTEM OUTBD RH. . .	1	
- 18	18S9200L-7	. . SEGMENT ASSY,EXHAUST SYSTEM INBD LH . . .	1	
	18S9200R-7	. . SEGMENT ASSY,EXHAUST SYSTEM INBD RH . . .	1	
- 19	18S9200L-9	. . SEGMENT ASSY,EXHAUST SYSTEM INBD LH . . .	1	
	18S9200R-11	. . SEGMENT ASSY,EXHAUST SYSTEM INBD RH . . .	1	
- 20	18S9200L-26	. . ADAPTER,#4 CYLINDER EXHAUST EXTENSION . . .	1	
		/LH ONLY/		
- 21	189207-2	. TUBE,INTENSIFIER EXHAUST.	1	
		/ATTACHING PARTS/		
- 22	AN3-25	. BOLT.	1	
	AN960-10	. WASHER.	1	
	AN310-3	. NUT	1	
	AN380-2-2	. PIN,COTTER.	1	
		----*----		
- 23	18S9204	. ADAPTER,EXHAUST STACK ELBOW	9	
		/ATTACHING PARTS/		
- 24	S-185-102-010	. BOLT,/MAKE FR AN5A BOLT/.	27	
	46A1135-524	. NUT,/GFAE/.	27	
		----*----		
	54-189216	TUBE INSTL,INTENSIFIER AIR INTAKE	REF	
		/SEE FIG. 33 FOR NHA/		
- 25	189220	. INLET ASSY,INTENSIFIER TUBE	1	
		/ATTACHING PARTS/		
- 26	AN515-8-8	. SCREW	3	
	AN960-8	. WASHER.	3	
	AN365-832	. NUT	3	
		----*----		
- 27	189217	. ELBOW ASSY,INTENSIFIER TUBE	1	
		/ATTACHING PARTS/		
- 28	AN515-8-40	. SCREW	1	
	AN960-8	. WASHER.	1	
	AN372-832	. NUT	1	
		----*----		
- 29	189218	. DEFLECTOR,INTENSIFIER TUBE.	1	

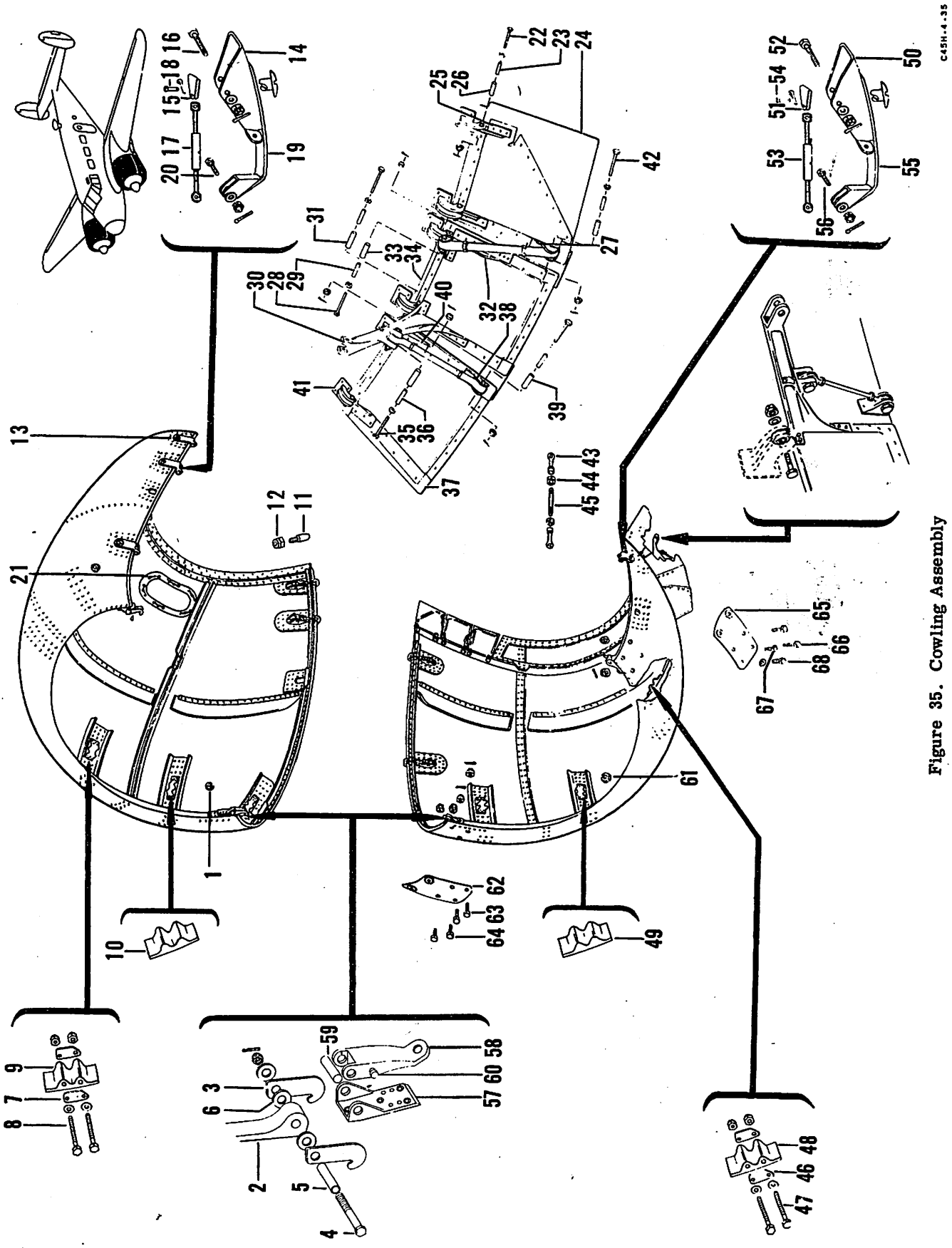

Figure 35. Cowling Assembly

FIG. & INDEX NO.	PART NO.	DESCRIPTION 1 2 3 4 5 6 7	UNITS PER ASSY	USABLE ON CODE
35	185901	COWLING ASSY,ENGINE UPPER LH. . . . . /SEE FIG. 33 FOR NHA/	REF	
	84-185905	COWLING ASSY,ENGINE UPPER LH. . . . . /SEE FIG. 33 FOR NHA/	REF	
	185901-500	COWLING ASSY,ENGINE UPPER RH. . . . . /SEE FIG. 33 FOR NHA/	REF	
	84-185905-500	COWLING ASSY,ENGINE UPPER RH. . . . . /SEE FIG. 33 FOR NHA/	REF	
- 1	74	. JACK,BONDING /77636/.	1	
	185915	. FASTENER ASSY,FRONT COWL UPPER.	2	
- 2	185916	. . HINGE,FRONT COWL FASTENER UPPER	1	
- 3	105350	. . LINK,FRONT COWL FASTENER UPPER. . . . . /ATTACHING PARTS/	2	
- 4	AN4-14	. . BOLT.	1	
	AN960-416	. . WASHER.	2	
	AN310-4	. . NUT	1	
	AN380-2-2	. . PIN,COTTER. . . . . ----*----	1	
- 5	100801-X5-0785	. . BUSHING,FRONT COWL FASTENER UPPER	1	
- 6	100696-D22-11-004	. . SPACER,FRONT COWL FASTENER UPPER.	2	
- 7	18S5937	. PLATE,FORE & AFT BRACKET. . . . . /ATTACHING PARTS/	2	
- 8	AN3-22A	. BOLT.	2	
	AN960-10	. WASHER.	2	
	AN365-1032	. NUT . . . . . ----*----	2	
- 9	18S5921-1	. BRACKET,COWL SUPPORT /DRILL ON INSTL/	1	
- 10	18S5921-2	. BRACKET,COWL SUPPORT /DRILL ON INSTL/	4	
- 11	18S5906	. STUD.	2	
- 12	AN365-1032	. NUT	2	
- 13	S-36-1	. FASTENER ASSY,COWLING	2	
	S-36-7	. FASTENER ASSY,COWLING	3	
- 14	S-36-6	. . BRACKET,/FOR S-36-7 ASSY/	1	
	S-36-2	. . BRACKET,/FOR S-36-1 ASSY/	1	
- 15	S-36-4	. . CLIP,COWLING FASTENER . . . . . /ATTACHING PARTS/	1	
- 16	AN3-12	. . BOLT.	1	
	AN960-10	. . WASHER.	1	
	AN310-3	. . NUT	1	
	AN380-2-2	. . PIN,COTTER. . . . . ----*----	1	
- 17	107464	. . TURNBUCKLE,COWLING. . . . . /ATTACHING PARTS/	1	
- 18	AN393-11	. . PIN	1	
	AN380-2-2	. . PIN,COTTER. . . . . ----*----	1	
- 19	S-36-3	. . EXTENSION,COWLING FASTENER. . . . . /ATTACHING PARTS/	1	
- 20	AN3-6	. . BOLT.	1	
	AN960-10	. . WASHER.	1	
	AN320-3	. . NUT	1	
	AN380-2-2	. . PIN,COTTER. . . . . ----*----	1	
- 21	84-185902	. DOOR,COWLING RH	1	
	185903	COWLING ASSY,ENGINE LOWER /SEE FIG. 33 FOR NHA/	REF	
	84-185970	COWLING ASSY,ENGINE LOWER /SEE FIG. 33 FOR NHA/	REF	
	18S5972	. FLAP ASSY,COWLING LOWER INBD.	1	
	18S5972	. FLAP ASSY,COWLING LOWER OUTBD . . . . . /ATTACHING PARTS/	1	
- 22	AN3-11	. BOLT.	2	
- 23	185972	. SPACER,COWL FLAP HINGE.	2	
	AN960-10L	. WASHER.	4	
	AN310-3	. NUT	2	
	AN380-2-2	. PIN,COTTER. . . . . ----*----	2	

FIG. & INDEX NO.	PART NO.	DESCRIPTION 1 2 3 4 5 6 7	UNITS PER ASSY	USABLE ON CODE
35 - 24	18S5986	. . PLATE,LOWER COWL FLAPS.	1	
	185980	. . HINGE ASSY,OUTER COWL FLAP LH	1	
	185980	. . HINGE ASSY,OUTER COWL FLAP RH	1	
- 25	185980-1	. . . HINGE,OUTER COWL FLAP LH.	1	
	185980-1	. . . HINGE,OUTER COWL FLAP RH.	1	
- 26	185979-1	. . . BUSHING,OUTER COWL FLAP	1	
- 27	185978	. . LUG,OUTER COWL FLAP CONTROL	1	
	185974	. . STIFFENER,UPPER COWL FLAP	1	
	185971	. FLAP ASSY,COWLING LOWER INBD.	1	
	185971	. FLAP ASSY,COWLING LOWER OUTBD	1	
		/ATTACHING PARTS/		
- 28	AN3-11	. BOLT.	2	
- 29	185972	. SPACER,COWL FLAP HINGE.	2	
	AN960-10L	. WASHER.	4	
	AN310-3	. NUT	2	
	AN380-2-2	. PIN,COTTER.	2	
		----*----		
	304918	. . HORN ASSY,COWL FLAP LH.	1	
	304918-1	. . HORN ASSY,COWL FLAP RH.	1	
- 30	304918-2	. . . HORN,COWL FLAP LH	1	
	304918-3	. . . HORN,COWL FLAP RH	1	
- 31	105212	. . . BUSHING,COWL FLAP HORN.	1	
	185981	. . HORN ASSY,COWL FLAP CONNECTING LH	1	
	185981	. . HORN ASSY,COWL FLAP CONNECTING RH	1	
- 32	185981-1	. . . HORN,COWL FLAP CONNECTING LH.	1	
	185981-1	. . . HORN,COWL FLAP CONNECTING RH.	1	
- 33	185979-1	. . . BUSHING,COWL FLAP CONNECTING.	1	
- 34	18S5985	. . PLATE,CENTER COWL FLAPS	1	
	18S5974	. . STIFFENER,CENTER COWL FLAP.	1	
	185988	. . GASKET,CENTER COWL FLAP CLOSING STRIP	2	
	18S5988	. . STRIP,CENTER COWL FLAP CLOSING.	2	
	18S5973	. FLAP ASSY,COWLING LOWER INBD.	1	
	18S5973	. FLAP ASSY,COWLING LOWER OUTBD	1	
		/ATTACHING PARTS/		
- 35	AN3-11	. BOLT.	2	
- 36	185792	. SPACER,COWL FLAP HINGE.	2	
	AN960-10L	. WASHER.	4	
	AN310-3	. NUT	2	
	AN380-2-2	. PIN,COTTER.	2	
		----*----		
- 37	18S5987	. . PLATE,LOWER COWL FLAPS.	1	
	185980	. . HINGE ASSY,OUTER COWL FLAP LH	1	
	185980	. . HINGE ASSY,OUTER COWL FLAP RH	1	
- 38	185980-1	. . . HINGE,OUTER COWL FLAP LH.	1	
	185980-1	. . . HINGE,OUTER COWL FLAP RH.	1	
- 39	185979-1	. . . BUSHING,OUTER COWL FLAP	1	
- 40	185978	. . LUG,OUTER COWL FLAP CONTROL	1	
	18S5975	. . STIFFENER,UPPER COWL FLAP	1	
- 41	185984	. HINGE ASSY,COWL FLAP LH	6	
	185984	. HINGE ASSY,COWL FLAP RH	6	
	185967	. LINK ASSY,COWL FLAP	4	
		/ATTACHING PARTS/		
- 42	AN3-11	. BOLT.	2	
	AN960-10	. WASHER.	2	
	AN310-3	. NUT	2	
	AN380-2-2	. PIN,COTTER.	2	
		----*----		
- 43	REB3N	. . END,COWL FLAP LINK /21335/.	2	
- 44	AN315-4R	. . NUT	2	
- 45	185968	. . LINK,COWL FLAPS CONNECTOR	1	
- 46	18S5937	. PLATE,FORE & AFT BRACKET.	2	
		/ATTACHING PARTS/		
- 47	AN3-22A	. BOLT.	2	
	AN960-10	. WASHER.	2	
	AN365-1032	. NUT	2	
		----*----		

FIG. & INDEX NO.	PART NO.	DESCRIPTION 1 2 3 4 5 6 7	UNITS PER ASSY	USABLE ON CODE
35 - 48	18S5921-1	. BRACKET,COWL SUPPORT /DRILL ON INSTL/	1	
- 49	18S5921-2	. BRACKET,COWL SUPPORT /DRILL ON INSTL/	3	
	S-36-7	. FASTENER ASSY,COWLING	3	
- 50	S-36-6	. . BRACKET,COWLING FASTENER	1	
- 51	S-36-4	. . CLIP,COWLING FASTENER	1	
		/ATTACHING PARTS/		
- 52	AN3-12	. . BOLT	1	
	AN960-10	. . WASHER	1	
	AN310-3	. . NUT	1	
	AN380-2-2	. . PIN,COTTER	1	
		----*----		
- 53	107464	. . TURNBUCKLE,COWLING FASTENER	1	
		/ATTACHING PARTS/		
- 54	AN393-11	. . PIN	1	
	AN380-2-2	. . PIN,COTTER	1	
		----*----		
- 55	S-36-3	. . EXTENSION,COWLING FASTENER	1	
		/ATTACHING PARTS/		
- 56	AN3-6	. . BOLT	1	
	AN960-10	. . WASHER	1	
	AN320-3	. . NUT	1	
	AN380-2-2	. . PIN,COTTER	1	
		----*----		
	185920*	. FASTENER ASSY,COWLING LOWER	2	
- 57	185917	. . HINGE,FASTENER ASSY	1	
- 58	185349	. . ARM,FASTENER ASSY	1	
		/ATTACHING PARTS/		
- 59	105352	. . BUSHING,FASTENER ASSY	1	
		----*----		
- 60	105351	. . PIN,FASTENER ASSY	1	
- 61	74	. JACK,BONDING /77636/	1	
- 62	185905-1**	. PLATE,COWLING JOINER INBD	1	
		/ATTACHING PARTS/		
- 63	AN3-4A	. BOLT	2	
- 64	AN3-4	. BOLT	2	
	AN365-1032	. NUT	2	
	AN310-3	. NUT	2	
	AN380-2-2	. PIN,COTTER	2	
		----*----		
- 65	185905**	. PLATE,COWLING JOINER OUTBD	1	
		/ATTACHING PARTS/		
- 66	AN3-4A	. BOLT	2	
- 67	AN3-4	. BOLT	2	
- 68	AN3-5	. BOLT	2	
	AN365-1032	. NUT	2	
	AN310-3	. NUT	2	
	AN380-2-2	. PIN,COTTER	2	
		----*----		

*FOR ALL MODELS USING 185903 LOWER COWLING ASSY
**FOR ALL MODELS USING 84-185970 LOWER COWLING ASSY.

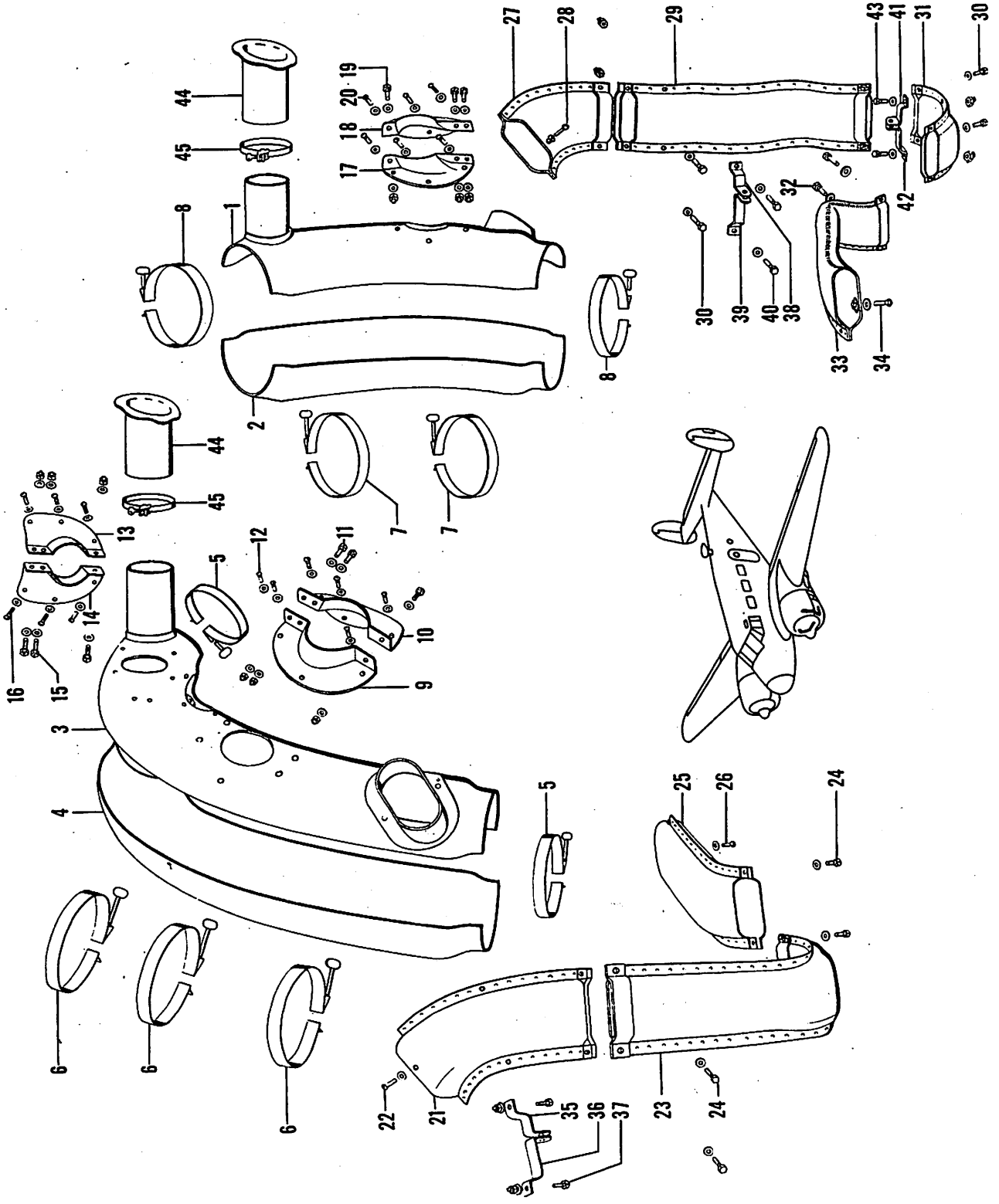

Figure 36. LH Carburetor Heater Muff Installation

FIG. & INDEX NO.	PART NO.	DESCRIPTION 1 2 3 4 5 6 7	UNITS PER ASSY	USABLE ON CODE
36	189174	MUFF INSTL,CARBURETOR HEATER LH /SEE FIG. 33 FOR NHA/	REF	
	189171-630	. RING ASSY,MUFF & COLLECTOR LH	1	
	18S9200L-28	. . RING ASSY,EXHAUST COLLECTOR LH/SEE FIG. 34/	1	
	189171	. . MUFF ASSY,CARBURETOR HEATER LH	1	
- 1	189165	. . . SHELL ASSY,HEATER MUFF FRONT LH	1	
- 2	189163	. . . SHELL ASSY,HEATER MUFF REAR LH	1	
- 3	189158	. . . SHELL ASSY,HEATER MUFF FRONT RH	1	
- 4	189154	. . . SHELL ASSY,HEATER MUFF REAR RH	1	
- 5	105798-14	. . . CLAMP,SHELL ASSY INBD	2	
- 6	105798-17	. . . CLAMP,SHELL ASSY INBD	3	
- 7	105798-21	. . . CLAMP,SHELL ASSY OUTBD	2	
- 8	105798-18	. . . CLAMP,SHELL ASSY OUTBD	2	
- 9	189171-2	. . . COLLAR,MUFF ASSY INBD HALF	1	
- 10	189171-4	. . . COLLAR,MUFF ASSY INBD HALF /ATTACHING PARTS/	1	
- 11	AN3-4A	. . . BOLT	3	
	AN960-10	. . . WASHER	6	
	AN372-1032	. . . NUT	3	
- 12	AN520-10-7	. . . SCREW	3	
		----*----		
- 13	189171-6	. . . COLLAR,MUFF ASSY OUTBD HALF	1	
- 14	189171-8	. . . COLLAR,MUFF ASSY OUTBD HALF /ATTACHING PARTS/	1	
- 15	AN3-4A	. . . BOLT	2	
	AN960-10	. . . WASHER	5	
	AN372-1032	. . . NUT	2	
- 16	AN520-10-7	. . . SCREW	3	
		----*----		
- 17	189171-10	. . . COLLAR,MUFF ASSY OUTBD HALF	1	
- 18	189171-12	. . . COLLAR,MUFF ASSY OUTBD HALF /ATTACHING PARTS/	1	
- 19	AN3-4A	. . . BOLT	3	
	AN960-10	. . . WASHER	6	
	AN372-1032	. . . NUT	3	
- 20	AN520-10-7	. . . SCREW	3	
		----*----		
- 21	189159	. DUCT ASSY,CARBURETOR HOT AIR UPPER RH /ATTACHING PARTS/	1	
- 22	AN520-10-8	. SCREW	1	
	AN960-10	. WASHER	1	
		----*----		
- 23	189142	. DUCT ASSY,CARBURETOR HOT AIR CENTER RH /ATTACHING PARTS/	1	
- 24	AN3-5A	. BOLT	4	
	AN960-10	. WASHER	4	
		----*----		
- 25	189140	. DUCT ASSY,CARBURETOR HOT AIR LOWER RH /ATTACHING PARTS/	1	
- 26	AN515-8-10	. SCREW	1	
	AN960-8	. WASHER	1	
		----*----		
- 27	189166	. DUCT ASSY,CARBURETOR MUFF OUTLET LH /ATTACHING PARTS/	1	
- 28	AN520-10-8	. SCREW	1	
	AN960-10	. WASHER	1	
		----*----		
- 29	189162	. DUCT ASSY,CARBURETOR HOT AIR UPPER LH /ATTACHING PARTS/	1	
- 30	AN3-5A	. BOLT	4	
	AN960-10	. WASHER	4	
		----*----		
- 31	189161	. DUCT ASSY,CARBURETOR HOT AIR CENTER LH /ATTACHING PARTS/	1	
- 32	AN3-5A	. BOLT	2	
	AN960-10	. WASHER	2	
		----*----		

FIG. & INDEX NO.	PART NO.	DESCRIPTION 1 2 3 4 5 6 7	UNITS PER ASSY	USABLE ON CODE
36 - 33	189160	• DUCT ASSY,CARBURETOR HOT AIR LOWER LH • • • •	1	
		/ATTACHING PARTS/		
- 34	AN515-8-10	• BOLT• • • • • • • • • • • • • • • • • • •	1	
	AN960-8	• WASHER• • • • • • • • • • • • • • • • • •	1	
		----*----		
- 35	189183	• CLAMP,MUFF ASSY INBD• • • • • • • • • • • •	1	
- 36	189184	• CLAMP,MUFF ASSY INBD• • • • • • • • • • • •	1	
		/ATTACHING PARTS/		
- 37	AN3-5A	• BOLT• • • • • • • • • • • • • • • • • • •	1	
	AN960-10	• WASHER• • • • • • • • • • • • • • • • • •	1	
	AN372-1032	• NUT • • • • • • • • • • • • • • • • • • •	1	
		----*----		
- 38	189169	• CLAMP,MUFF ASSY UPPER • • • • • • • • • • •	1	
- 39	189170	• CLAMP,MUFF ASSY UPPER • • • • • • • • • • •	1	
		/ATTACHING PARTS/		
- 40	AN3-5A	• BOLT• • • • • • • • • • • • • • • • • • •	1	
	AN960-10	• WASHER• • • • • • • • • • • • • • • • • •	1	
	AN372-1032	• NUT • • • • • • • • • • • • • • • • • • •	1	
		----*----		
- 41	189172	• CLAMP,MUFF ASSY LOWER • • • • • • • • • • •	1	
- 42	189173	• CLAMP,MUFF ASSY LOWER • • • • • • • • • • •	1	
		/ATTACHING PARTS/		
- 43	AN3-5A	• BOLT• • • • • • • • • • • • • • • • • • •	1	
	AN960-10	• WASHER• • • • • • • • • • • • • • • • • •	1	
	AN372-1032	• NUT • • • • • • • • • • • • • • • • • • •	1	
		----*----		
- 44	189224	• INLET,CARBURETOR HEATER MUFF• • • • • • • •	2	
- 45	105798-10	• CLAMP,HEATER MUFF INLET • • • • • • • • • •	2	

C45H-4-37

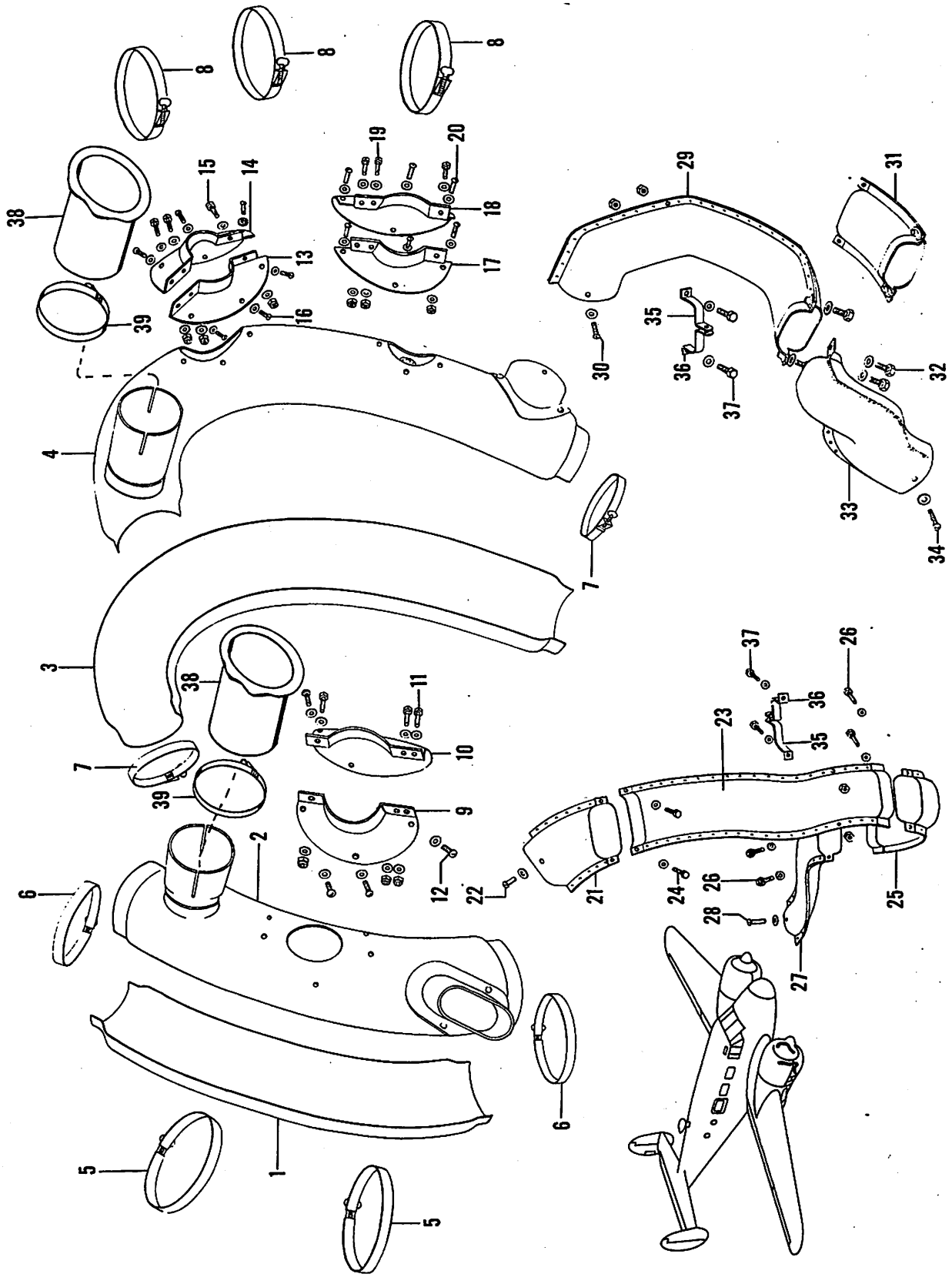

Figure 37. RH Carburetor Heater Muff Installation

FIG. & INDEX NO.	PART NO.	DESCRIPTION 1 2 3 4 5 6 7	UNITS PER ASSY	USABLE ON CODE
37	189175	MUFF INSTL,CARBURETOR HEATER RH /SEE FIG. 33 FOR NHA/	REF	
	189175-631	. RING ASSY,MUFF & COLLECTOR	1	
	18S9200R-32	. . RING ASSY,EXHAUST COLLECTOR RH/SEE FIG. 34/	1	
	189186	. . MUFF ASSY,CARBURETOR HEATER RH	1	
- 1	189177	. . . SHELL ASSY,HEATER MUFF REAR RH	1	
- 2	189182	. . . SHELL ASSY,HEATER MUFF FRONT RH	1	
- 3	189181	. . . SHELL ASSY,HEATER MUFF REAR LH	1	
- 4	189180	. . . SHELL ASSY,HEATER MUFF FRONT LH	1	
- 5	105798-21	. . . CLAMP,SHELL ASSY OUTBD	2	
- 6	105798-18	. . . CLAMP,SHELL ASSY OUTBD	2	
- 7	105798-14	. . . CLAMP,SHELL ASSY INBD	2	
- 8	105798-17	. . . CLAMP,SHELL ASSY INBD	3	
- 9	189186-2	. . . COLLAR,MUFF ASSY OUTBD HALF	1	
- 10	189186-4	. . . COLLAR,MUFF ASSY OUTBD HALF /ATTACHING PARTS/	1	
- 11	AN3-4A	. . . BOLT	3	
	AN960-10	. . . WASHER	6	
	AN372-1032	. . . NUT	3	
- 12	AN520-10-7	. . . SCREW	3	
		----*----		
- 13	189186-6	. . . COLLAR,MUFF ASSY INBD HALF	1	
- 14	189186-8	. . . COLLAR,MUFF ASSY INBD HALF /ATTACHING PARTS/	1	
- 15	AN3-4A	. . . BOLT	3	
	AN960-10	. . . WASHER	6	
	AN372-1032	. . . NUT	3	
- 16	AN520-10-7	. . . SCREW	3	
		----*----		
- 17	189186-10	. . . COLLAR,MUFF ASSY INBD HALF	1	
- 18	189186-12	. . . COLLAR,MUFF ASSY INBD HALF /ATTACHING PARTS/	1	
- 19	AN3-4A	. . . BOLT	3	
	AN960-10	. . . WASHER	13	
	AN372-1032	. . . NUT	3	
- 20	AN520-10-7	. . . SCREW	7	
		----*----		
- 21	189121	. DUCT ASSY,CARBURETOR HOT AIR UPPER RH /ATTACHING PARTS/	1	
- 22	AN520-10-8	. SCREW	1	
	AN960-10	. WASHER	1	
		----*----		
- 23	189179	. DUCT ASSY,CARBURETOR HOT AIR CENTER RH /ATTACHING PARTS/	1	
- 24	AN3-5A	. BOLT	2	
	AN960-10	. WASHER	2	
		----*----		
- 25	189178	. DUCT ASSY,CARBURETOR HOT AIR LOWER RH /ATTACHING PARTS/	1	
- 26	AN3-5A	. BOLT	4	
	AN960-10	. WASHER	4	
		----*----		
- 27	189140	. DUCT ASSY,CARBURETOR HOT AIR LOWER RH /ATTACHING PARTS/	1	
- 28	AN515-8-10	. SCREW	1	
	AN960-8	. WASHER	1	
		----*----		
- 29	189159-1	. DUCT ASSY,CARBURETOR HOT AIR UPPER LH /ATTACHING PARTS/	1	
- 30	AN520-10-8	. SCREW	2	
	AN960-10	. WASHER	2	
		----*----		
- 31	189176	. DUCT ASSY,CARBURETOR HOT AIR CENTER LH /ATTACHING PARTS/	1	
- 32	AN3-5A	. BOLT	4	
	AN960-10	. WASHER	4	
		----*----		

FIG. & INDEX NO.	PART NO.	DESCRIPTION 1 2 3 4 5 6 7	UNITS PER ASSY	USABLE ON CODE
37 - 33	189160	• DUCT ASSY,CARBURETOR HOT AIR LOWER LH • • • • /ATTACHING PARTS/	1	
- 34	AN515-8-10	• SCREW • • • • • • • • • • • • • • • • • •	1	
	AN960-8	• WASHER• • • • • • • • • • • • • • • • • •	1	
		----*----		
- 35	189169	• CLAMP,MUFF ASSY • • • • • • • • • • • • • •	2	
- 36	189170	• CLAMP,MUFF ASSY • • • • • • • • • • • • • • /ATTACHING PARTS/	2	
- 37	AN3-5A	• BOLT• • • • • • • • • • • • • • • • • • •	1	
	AN960-10	• WASHER• • • • • • • • • • • • • • • • • •	1	
	AN372-1032	• NUT • • • • • • • • • • • • • • • • • • •	1	
		----*----		
- 38	189224	• INLET,HEATER MUFF • • • • • • • • • • • • •	2	
- 39	105798-10	• CLAMP,HEATER MUFF INLET • • • • • • • • • •	2	

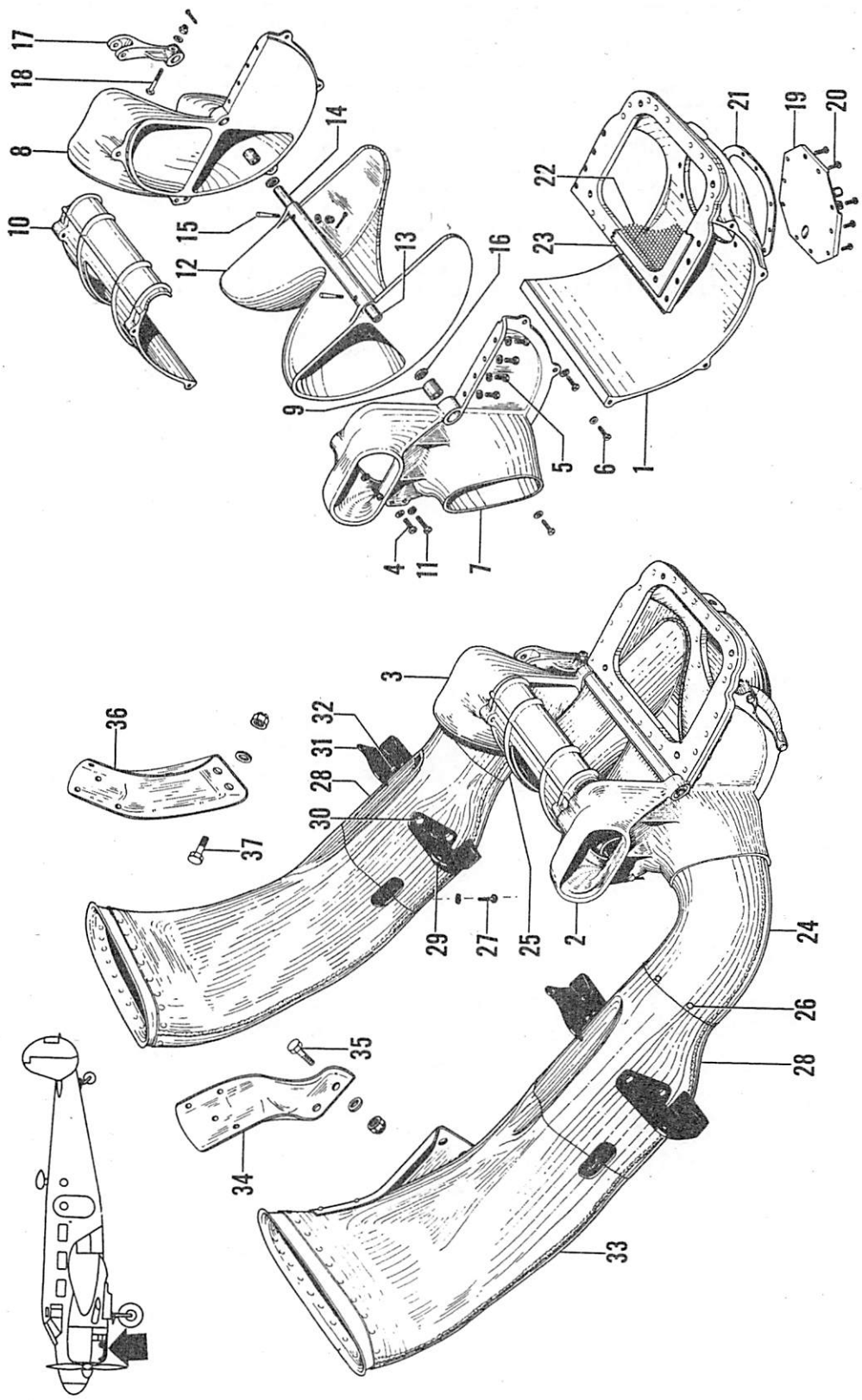

Figure 38. Carburetor Air Scoop and Duct Installation

FIG. & INDEX NO.	PART NO.	DESCRIPTION 1 2 3 4 5 6 7	UNITS PER ASSY	USABLE ON CODE
38	18S9150	SCOOP ASSY,CARBURETOR AIR /SEE FIG. 33 FOR NHA/	REF	A-1,B
	18S9150-4	SCOOP ASSY,CARBURETOR AIR /SEE FIG. 33 FOR NHA/	REF	A-2
	18S9150-2	. SCOOP ASSY,CARBURETOR AIR	1	A-1,B
	18S9150-6	. SCOOP ASSY,CARBURETOR AIR	1	A-2
- 1	18S9151	. . BODY ASSY,CARBURETOR AIR SCOOP.	1	A-1,B
	18S9151-2	. . BODY ASSY,CARBURETOR AIR SCOOP.	1	A-2
- 2	18S9152	. . SIDE ASSY,CARBURETOR AIR SCOOP LH	1	
- 3	18S9152-1	. . SIDE ASSY,CARBURETOR AIR SCOOP RH	1	
		/ATTACHING PARTS/		
- 4	AN500A10-10	. . SCREW	8	
- 5	AN500A10-7	. . SCREW	8	
	100951-S063-007-012	. . WASHER.	8	
- 6	AN500A10-8	. . SCREW	2	
	AN960-10	. . WASHER.	2	
		----*----		
- 7	18S9152-2	. . . SIDE,CARBURETOR AIR SCOOP LH.	1	
- 8	18S9152-3	. . . SIDE,CARBURETOR AIR SCOOP RH.	1	
- 9	B-88	. . . BEARING,/60380/	1	
- 10	189238	. . SUPPORT,CARBURETOR AIR SCOOP.	1	
		/ATTACHING PARTS/		
- 11	AN500-10-12	. . SCREW	2	
	100951-S063-007-012	. . WASHER.	2	
		----*----		
	18S9154	. . VALVE ASSY,CARBURETOR AIR SCOOP	1	
- 12	18S9154-1	. . . VALVE,CARBURETOR AIR SCOOP.	1	
- 13	189155	. . . SHAFT,CARBURETOR AIR SCOOP.	1	
- 14	18S9155	. . . SHAFT,CARBURETOR AIR SCOOP.	1	
		/ATTACHING PARTS/		
- 15	189164	. . . PIN,TAPER	2	
	AN960-10L	. . . WASHER.	2	
	AN310-3	. . . NUT	2	
	AN380-2-2	. . . PIN,COTTER.	2	
		----*----		
- 16	18S9164	. . WASHER.	2	
- 17	18S9156A	. . ARM,CARBURETOR AIR VALVE CONTROL.	1	
		/ATTACHING PARTS/		
- 18	S-73-11	. . BOLT.	1	
	AN960-10	. . WASHER.	1	
	AN310-3	. . NUT	1	
	AN380-2-2	. . PIN,COTTER.	1	
		----*----		
- 19	18S9162	. COVER,CARBURETOR AIR SCOOP.	1	
		/ATTACHING PARTS/		
- 20	AN520-10-5	. SCREW	10	
	AN935-10	. WASHER.	10	
		----*----		
- 21	18S9161	. GASKET,CARBURETOR AIR SCOOP	1	
- 22	6906	. SCREEN,CARBURETOR AIR SCOOP /77445/	1	
- 23	26404	. GASKET,CARBURETOR AIR SCOOP /80044/	1	
	804-189131	DUCT INSTL,CARBURETOR AIR /SEE FIG. 33 FOR NHA/	REF	
- 24	18S9132-2	. ELBOW,CARBURETOR AIR DUCT LH.	1	
- 25	18S9132-1	. ELBOW,CARBURETOR AIR DUCT RH.	1	
		/ATTACHING PARTS/		
- 26	AN526-8-8	. SCREW	12	
	AN960-8	. WASHER.	12	
		----*----		
	804-189140	. DUCT ASSY,CARBURETOR AIR INTAKE	2	
		/ATTACHING PARTS/		
- 27	AN526-8-8	. SCREW	4	
	AN960-8	. WASHER.	4	
		----*----		

FIG. & INDEX NO.	PART NO.	DESCRIPTION 1 2 3 4 5 6 7	UNITS PER ASSY	USABLE ON CODE
38 - 28	804-189139	. . DUCT,CARBURETOR AIR INTAKE.	1	
- 29	804-189061	. . BRACKET ASSY,CARBURETOR AIR DUCT RH . . . . /ATTACHING PARTS/	1	
- 30	AN3-4A	. . BOLT.	2	
	AN960-10	. . WASHER.	4	
	AN365-1032	. . NUT	2	
		----*----		
- 31	804-189062	. . BRACKET ASSY,CARBURETOR AIR DUCT LH . . . . /ATTACHING PARTS/	1	
- 32	AN3-4A	. . BOLT.	2	
	AN960-10	. . WASHER.	4	
	AN365-1032	. . NUT	2	
		----*----		
- 33	804-189095	. SCOOP ASSY,CARBURETOR AIR INTAKE.	2	
- 34	404-189096	. BRACKET,CARBURETOR AIR SCOOP FRONT LH . . . . /ATTACHING PARTS/	2	
- 35	AN4-6	. BOLT.	4	
	AN960-416	. WASHER.	4	
	AN310-4	. NUT	4	
	AN380-2-2	. PIN,COTTER.	4	
		----*----		
- 36	18S9163	. BRACKET,CARBURETOR AIR SCOOP FRONT RH . . . . /ATTACHING PARTS/	2	
- 37	AN4-6	. BOLT.	4	
	AN960-416	. WASHER.	4	
	AN310-4	. NUT	4	
	AN380-2-2	. PIN,COTTER.	4	
		----*----		

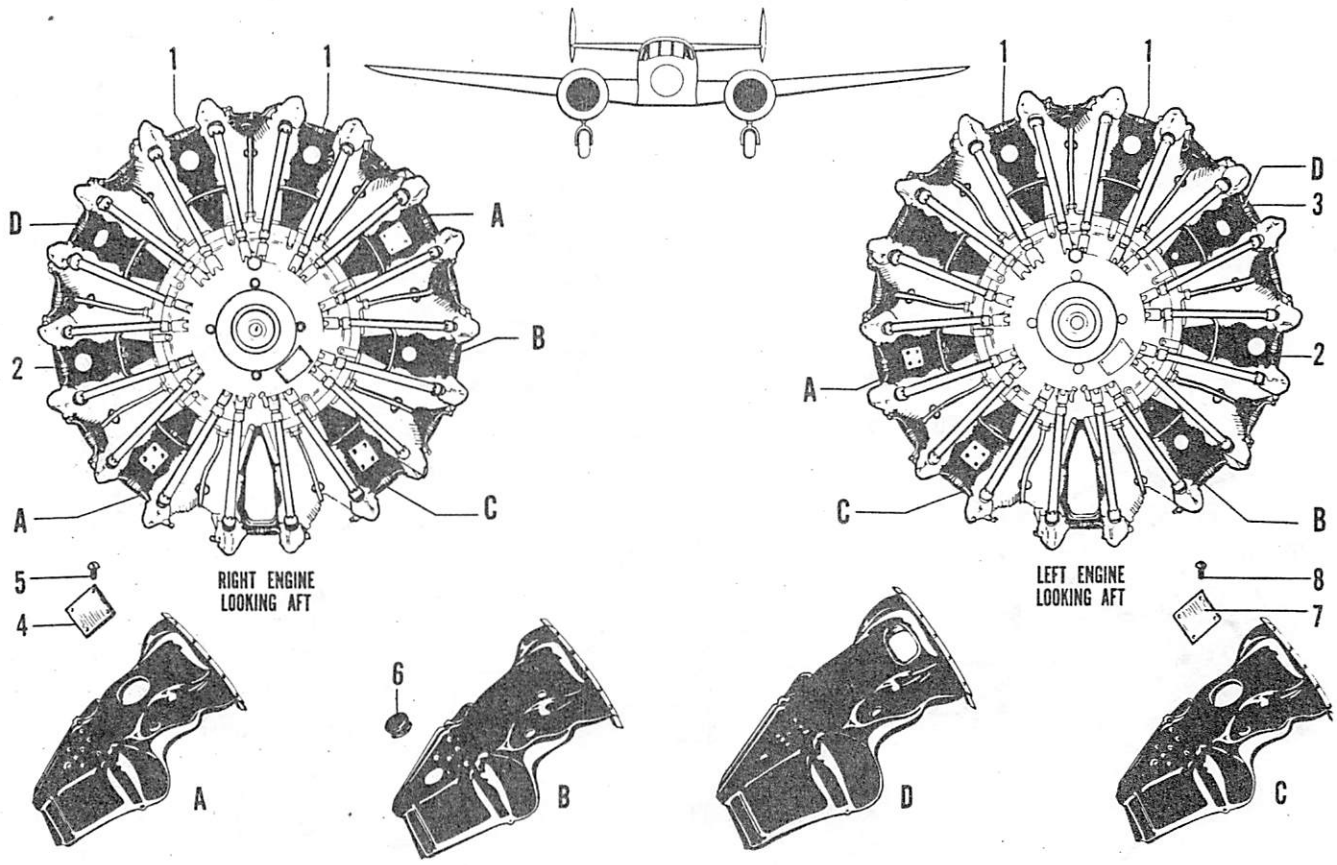

Figure 39. Engine Baffle Installation

C45H-4-39

FIG. & INDEX NO.	PART NO.	DESCRIPTION 1 2 3 4 5 6 7	UNITS PER ASSY	USABLE ON CODE
39	189110-1	BAFFLE INSTL,ENGINE /SEE FIG. 33 FOR NHA/ . . .	REF	
- 1	189109	. BAFFLE,CARBURETOR HOT AIR INTAKE. . . . . /MAKE FR /77445/ 399820/	2	
- 2	189108	. BAFFLE,INTENSIFIER TUBE INLET . . . . . /MAKE FR /77445/ 29982/	1	
- 3	694-189107-1	. BAFFLE,#8 & #9 INNER CYLINDER LH.	1	
	694-189107-3	. BAFFLE,#2 & #3 INNER CYLINDER RH.	1	
- 4	84-189114	. PLATE,BAFFLE SMALL PATCH LH	1	
	84-189114	. PLATE,BAFFLE SMALL PATCH RH . . . . . /ATTACHING PARTS/	2	
- 5	AN515-8-8	. SCREW	4	
	AN960-8	. WASHER.	4	
	AN365-832	. NUT . . . . . -----*-----	4	
- 6	M33705	. PLUG,/25472/.	1	
- 7	84-189115	. PLATE,BAFFLE LARGE PATCH. . . . . /ATTACHING PARTS/	1	
- 8	AN515-8-8	. SCREW	4	
	AN960-8	. WASHER.	4	
	AN365-832	. NUT . . . . . -----*-----	4	

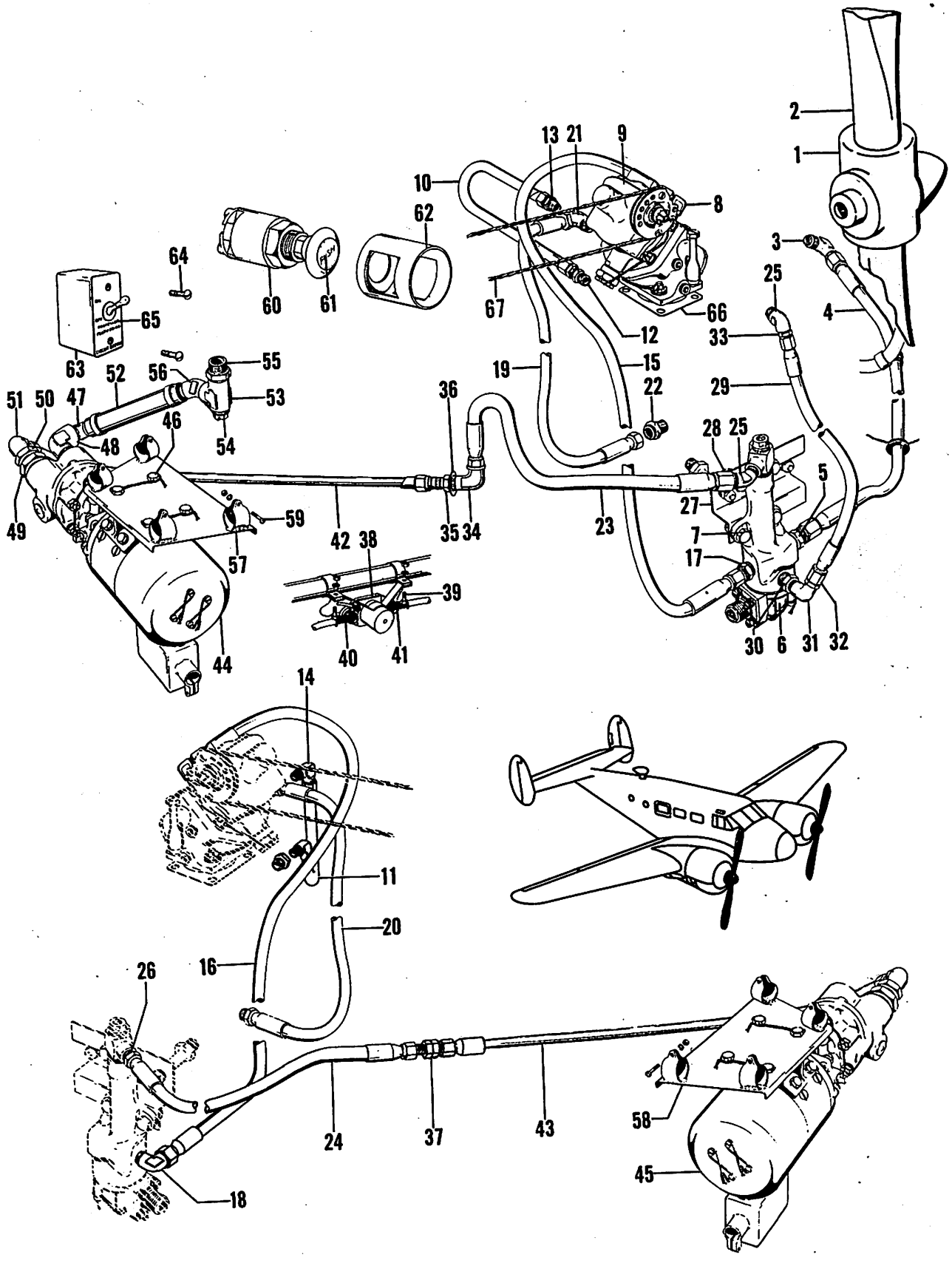

Figure 40. Hydromatic Propeller Installation

C45H-4-40

FIG. & INDEX NO.	PART NO.	DESCRIPTION 1 2 3 4 5 6 7	UNITS PER ASSY	USABLE ON CODE
40	694-189010	PROPELLER INSTL,HYDROMATIC /SEE FIG. 1 FOR NHA/	1	A-2
- 1	22D30-313	. HUB,PROPELLER /73030/ /GFAE/.	1	A-2
- 2	6531A-15*	. BLADE,PROPELLER /73030/ /GFAE/.	2	A-2
	6531A-16*	. BLADE,PROPELLER /73030/ /GFAE/.	2	A-2
- 3	AN822-8	. ELBOW,90 DEGREE	1	A-2
- 4	AN6271-8-26-3/4	. HOSE ASSY	1	A-2
- 5	AN816-8	. NIPPLE.	1	A-2
- 6	92063	. ADAPTER,/GFAE/.	1	A-2
		/ATTACHING PARTS/		
- 7	AN4-6A	. BOLT.	2	
	AN960-416	. WASHER.	2	
	AN365-428	. NUT	2	
		----*----		
- 8	AN822-6	. ELBOW,90 DEGREE	1	A-2
- 9	4B2-P6**	. GOVERNOR,/73030/ /GFAE/	1	A-2
	4B2-P8**	. GOVERNOR,/73030/ /GFAE/	1	A-2
- 10	189018	. TUBE ASSY,HYDRAULIC LH.	1	A-2
- 11	189015	. TUBE ASSY,HYDRAULIC RH.	1	A-2
- 12	AN816-6	. NIPPLE.	1	A-2
- 13	AN912-2	. BUSHING	1	A-2
- 14	AN822-6	. ELBOW,90 DEGREE /RH ONLY/	1	A-2
- 15	AN6264-6-39-1/2	. HOSE ASSY,LH.	1	A-2
- 16	AN6264-6-23-1/2	. HOSE ASSY,RH.	1	A-2
- 17	AN816-6	. NIPPLE.	1	A-2
- 18	AN823-6	. ELBOW,45 DEGREE /RH ONLY/	1	A-2
- 19	AN6264-6-24-1/2	. HOSE ASSY,LH.	1	A-2
- 20	AN6264-6-29-3/4	. HOSE ASSY,RH.	1	A-2
- 22	AN816-6	. NIPPLE.	1	A-2
- 23	AN6271-8-24	. HOSE ASSY,LH.	1	A-2
- 24	AN6271-8-9	. HOSE ASSY,RH.	1	A-2
- 25	AN823-8	. ELBOW,45 DEGREE /LH ONLY/	1	A-2
- 26	AN816-8	. NIPPLE,/RH ONLY/.	1	A-2
- 27	404-189008	. BRACKET,HYDROMATIC PROPELLER VALVE ADAPTER. .	1	A-2
		/ATTACHING PARTS/		
- 28	404-189009	. SPACER,HYDROMATIC PROPELLER VALVE ADAPTER . .	1	
	AN365-524	. NUT	1	
	AN960-516	. WASHER.	1	
		----*----		
- 29	AN6264-4-10-5/8	. HOSE ASSY	1	A-2
- 30	AN912-1	. BUSHING	1	A-2
- 31	AN822-4	. ELBOW,90 DEGREE	1	A-2
- 32	189759	. FITTING	1	A-2
- 33	AN816-4	. NIPPLE.	1	A-2
- 34	AN833-8	. ELBOW,90 DEGREE /LH ONLY/	1	A-2
- 35	AN924-8D	. NUT	1	A-2
- 36	AN960-1216	. WASHER.	1	A-2
- 37	AN832-8	. UNION,/RH ONLY/	1	A-2
- 38	AN3371-2	. RELAY,/GFAE/.	1	A-2
		/ATTACHING PARTS/		
- 39	AN6-5A	. BOLT.	1	
	AN960-616	. WASHER.	1	
	AN365-624	. NUT	1	
		----*----		
- 40	22500	. COVER,TERMINAL /77969/.	2	A-2
- 41	4300	. COVER,TERMINAL /77969/.	2	A-2
- 42	404-189088	. TUBE ASSY,HYDRAULIC LH.	1	A-2
- 43	404-189089	. TUBE ASSY,HYDRAULIC RH.	1	A-2

*THESE PARTS ARE INTERCHANGEABLE.
**THESE PARTS ARE INTERCHANGEABLE.

FIG. & INDEX NO.	PART NO.	DESCRIPTION 1 2 3 4 5 6 7	UNITS PER ASSY	USABLE ON CODE
40 - 44	NO NUMBER	. PUMP ASSY,HYDROMATIC PROPELLER FEATHERING LH. /MAKE FR /73030/ 66166-12/	1	A-2
- 45	66166-12	. PUMP ASSY,HYDROMATIC PROPELLER FEATHERING RH. /73030/ /GFAE/ /ATTACHING PARTS/	1	A-2
- 46	404-189074	. STUD.	4	
		----*----		
- 47	AN844-16D	. ELBOW,45 DEGREE	2	A-2
- 48	AN914-6D	. ELBOW,90 DEGREE	1	A-2
- 49	AN912-7	. BUSHING	1	A-2
- 50	AN912-4D	. BUSHING	1	A-2
- 51	AN822-8D	. ELBOW,90 DEGREE	1	A-2
- 52	106200H-16-26	. HOSE.	1	A-2
- 53	AN917-6D	. TEE	1	A-2
- 54	AN913-6	. PLUG.	1	A-2
- 55	AN911-6	. NIPPLE.	1	A-2
- 56	AN844-16D	. ELBOW,45 DEGREE	2	A-2
- 57	407-189072	. SUPPORT ASSY,PROPELLER FEATHERING PUMP LH . .	1	A-2
- 58	407-189072-1	. SUPPORT ASSY,PROPELLER FEATHERING PUMP RH . . /ATTACHING PARTS/	1	A-2
- 59	AN4-7A	. BOLT.	4	
	AN960-416	. WASHER.	4	
	AN365-428	. NUT	4	
		----*----		
- 60	39116	. SWITCH,/73030/.	1	A-2
- 61	404-180036	. PLACARD,PROPELLER FEATHERING.	1	A-2
- 62	404-183829	. GUARD,PROPELLER FEATHERING SWITCH	1	A-2
- 63	AN3160-5	. BREAKER,CIRCUIT . . . . . /ATTACHING PARTS/	1	A-2
- 64	AN515-6R6	. SCREW	2	
		----*----		
- 65	437-180028	. PLACARD,FEATHERING CONTROLS CIRCUIT BREAKER .	1	A-2
- 66	189021	. GASKET,PROPELLER GOVERNOR	1	A-2
- 67	74-189020-1L	CONTROL INSTL,CONSTANT SPEED PROPELLER LH . . . /SEE FIG. 41/	1	A-2
	74-189020-1R	CONTROL INSTL,CONSTANT SPEED PROPELLER RH . . . /SEE FIG. 41/	1	A-2

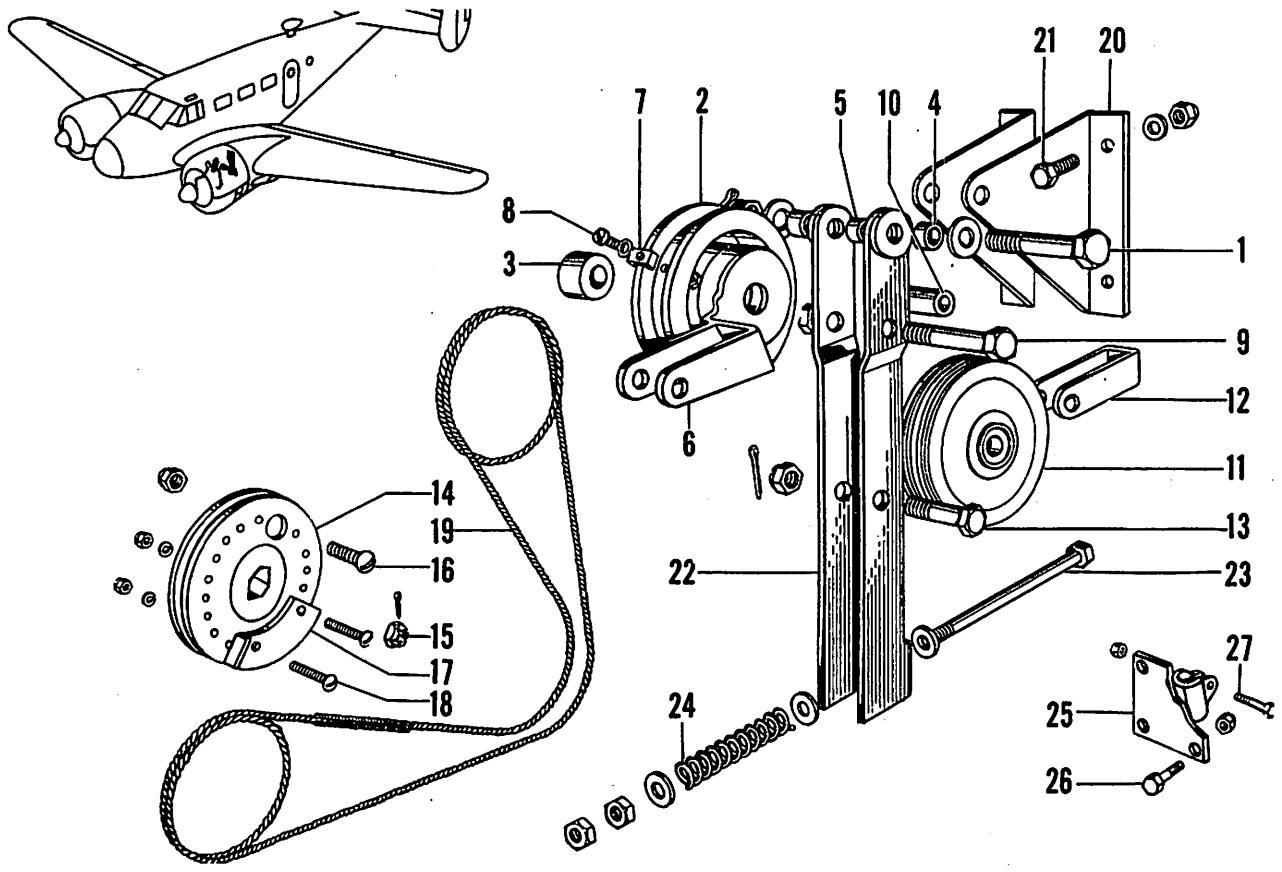

Figure 41. Constant Speed Propeller Control Installation C45H-4-41

FIG. & INDEX NO.	PART NO.	DESCRIPTION 1 2 3 4 5 6 7	UNITS PER ASSY	USABLE ON CODE
41	74-189020-1L	CONTROL INSTL,CONSTANT SPEED PROPELLER LH /SEE FIG. 1 FOR NHA/	REF	A-2
	74-189020-1R	CONTROL INSTL,CONSTANT SPEED PROPELLER LH /SEE FIG. 1 FOR NHA/	REF	A-2
	74-189032	PULLEY ASSY,PROPELLER CONTROL FIREWALL /ATTACHING PARTS/	1	A-2
- 1	AN3-14	BOLT	1	
	AN940-316	WASHER	2	
	AN310-3	NUT	1	
	AN380-2-2	PIN,COTTER	1	
		----*----		
- 2	74-189032-1	PULLEY,PROPELLER CONTROL FIREWALL	1	A-2
- 3	D-3	BEARING,PROPELLER CONTROL PULLEY /21335/	1	A-2
- 4	18S9034	SPACER,PROPELLER CONTROL PULLEY	2	A-2
- 5	102933-S4-0250-0081	SPACER,PROPELLER CONTROL PULLEY	2	A-2
- 6	18S9031	LEVER,CONSTANT SPEED PROPELLER CONTROL	1	A-2
- 7	18S9022-8	CLIP,CABLE HOLD DOWN /ATTACHING PARTS/	1	A-2
- 8	AN520-10-8	SCREW	1	
	74-189020-3	WASHER	1	
	AN315-3R	NUT	1	
		----*----		
- 9	AN3-12A	BOLT	1	A-2
	AN365-1032	NUT	1	A-2
- 10	100801-X3-0812	BUSHING	1	A-2

FIG. & INDEX NO.	PART NO.	DESCRIPTION 1 2 3 4 5 6 7	UNITS PER ASSY	USABLE ON CODE
41 - 11	AN210-2A	. PULLEY,CONSTANT SPEED PROPELLER CONTROL . . .	1	A-2
- 12	18S9022-5	. GUARD,CONSTANT SPEED PROPELLER CONTROL PULLEY	1	A-2
		/ATTACHING PARTS/		
- 13	AN3-11	. BOLT.	1	
	AN310-3	. NUT	1	
	AN380-2-2	. PIN,COTTER.	1	
		----*----		
- 14	74-189023-1	. PULLEY,CONSTANT SPEED CONTROL UNIT.	1	A-2
		/ATTACHING PARTS/		
- 15	AN310-4	. NUT	1	
	AN380-2-2	. PIN,COTTER.	1	
		----*----		
- 16	AN526-832-8	. SCREW,CABLE ADJUSTING	1	A-2
	AN365-832	. NUT	1	A-2
- 17	74-189027	. STOP,CONSTANT SPEED CONTROL UNIT PULLEY . . .	1	A-2
		/ATTACHING PARTS/		
- 18	AN515-8-10	. SCREW	2	
	AN935-8	. WASHER,LOCK	2	
	AN340-8	. NUT	2	
		----*----		
- 19	74-189026-1	. CABLE,CONSTANT SPEED CONTROL LH	1	A-2
	74-189026-2	. CABLE,CONSTANT SPEED CONTROL RH	1	A-2
- 20	18S9022-1L	. BRACKET,CONSTANT SPEED CONTROL PULLEY LH. . .	1	A-2
	18S9022-1R	. BRACKET,CONSTANT SPEED CONTROL PULLEY RH. . .	1	A-2
		/ATTACHING PARTS/		
- 21	AN3-4A	. BOLT.	2	
	AN960-10	. WASHER.	2	
	AN365-1032	. NUT	2	
		----*----		
- 22	18S9022-6	. ARM,PULLEY SUPPORT.	1	A-2
- 23	4-189036	. BOLT,PULLEY SUPPORT ARM ADJUSTMENT.	1	A-2
	AN940-416	. WASHER.	2	A-2
	AN960-416	. WASHER.	1	A-2
	AN316-4R	. NUT	2	A-2
- 24	S-139	. SPRING.	1	A-2
- 25	18S9021	. BRACKET,CONSTANT SPEED CONTROL SUPPORT. . . .	1	A-2
		/ATTACHING PARTS/		
- 26	AN3-4	. BOLT.	4	
		----*----		
	S-241	. BUSHING	1	A-2
- 27	AN3-7A	. BOLT.	1	A-2

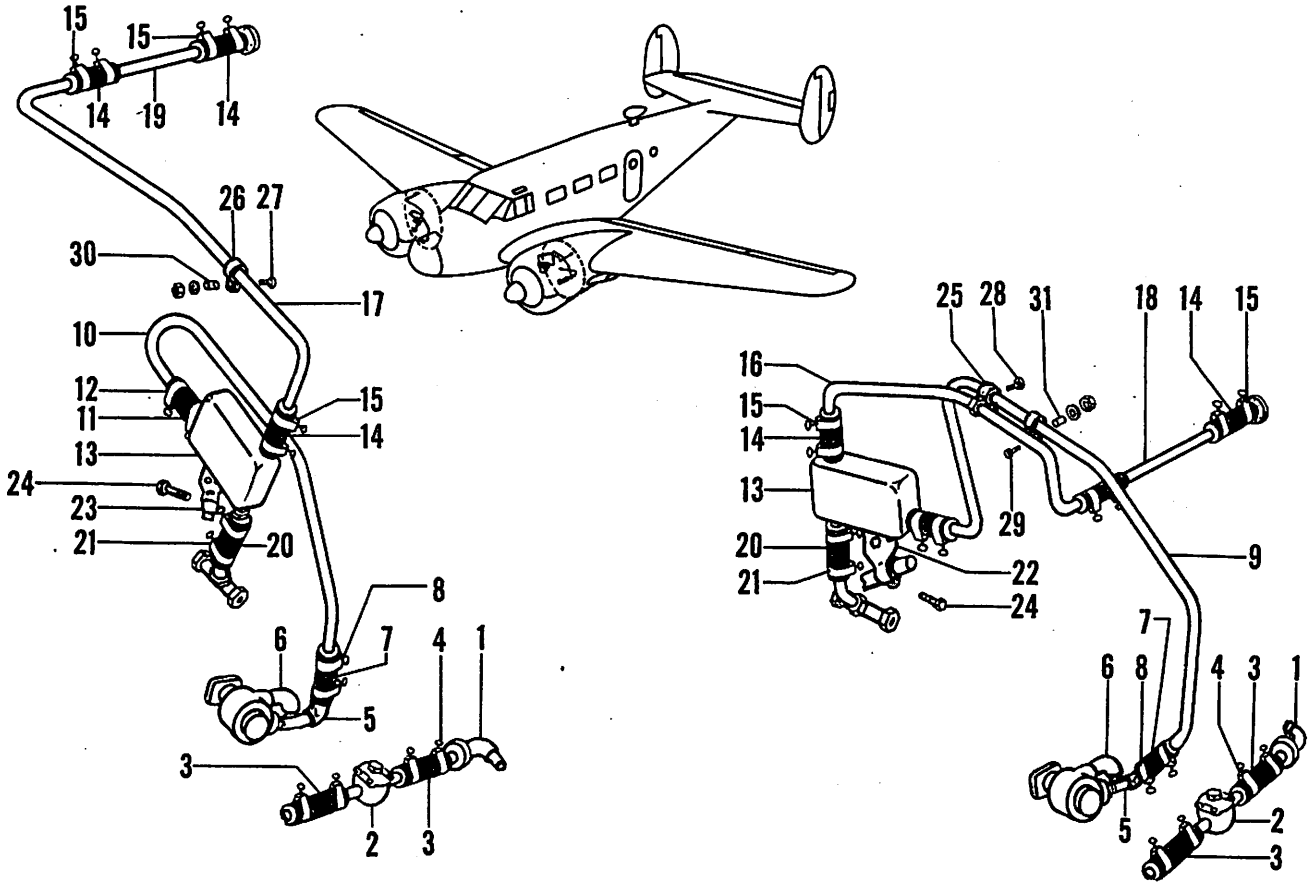

Figure 42. Engine Section Vacuum System Installation

C45H-4-42

FIG. & INDEX NO.	PART NO.	DESCRIPTION 1 2 3 4 5 6 7	UNITS PER ASSY	USABLE ON CODE
42	694-189775	SYSTEM INSTL,ENGINE SECTION VACUUM LH /SEE FIG. 1 FOR NHA/	1	
	694-189775-1	SYSTEM INSTL,ENGINE SECTION VACUUM RH /SEE FIG. 1 FOR NHA/	1	
- 1	AN844-10D	. ELBOW,45 DEGREE	1	
- 2	AN6119-2	. VALVE,SUCTION RELIEF	1	
- 3	106200H-10-15	. HOSE	2	
- 4	AN748-34	. CLAMP,HOSE	4	
- 5	AN844-10	. ELBOW,45 DEGREE	1	
- 6	AN842-10	. ELBOW,90 DEGREE	1	
- 7	106200H-10-11	. HOSE	1	
- 8	AN748-34	. CLAMP,HOSE	2	
- 9	694-189779	. TUBE,VACUUM PRESSURE LH	1	
- 10	189777	. TUBE,VACUUM PRESSURE RH	1	
- 11	106200H-10-11	. HOSE	1	
- 12	AN748-34	. CLAMP,HOSE	2	
- 13	AN6121-2	. SEPARATOR,OIL	1	
- 14	106200H-10-11	. HOSE	3	
- 15	AN748-34	. CLAMP,HOSE	6	
- 16	694-189791	. TUBE,OIL SEPARATOR PRESSURE LH	1	
- 17	694-189775-3	. TUBE,OIL SEPARATOR PRESSURE RH	1	
- 18	694-189795	. TUBE,OIL SEPARATOR CONNECTING PRESSURE LH	1	
- 19	94-189781	. TUBE,OIL SEPARATOR CONNECTING PRESSURE RH	1	
	AN840-10D	. ADAPTER	1	
- 20	106200H-8-9	. HOSE	1	
- 21	AN748-30	. CLAMP,HOSE	2	

FIG. & INDEX NO.	PART NO.	DESCRIPTION 1 2 3 4 5 6 7	UNITS PER ASSY	USABLE ON CODE
42 - 22	84-189746	. CLAMP ASSY,OIL SEPARATOR LH	1	
- 23	84-189746-1	. CLAMP ASSY,OIL SEPARATOR RH	1	
		/ATTACHING PARTS/		
- 24	AN4-10	. BOLT.	1	
	AN960-416	. WASHER.	1	
	AN310-4	. NUT	1	
	AN380-2-2	. PIN,COTTER.	1	
	AN960-10	. WASHER.	4	
		----*----		
- 25	AN742-10	. CLAMP,/LH ENGINE ONLY/.	4	
- 26	AN742-10	. CLAMP,/RH ENGINE ONLY/.	2	
		/ATTACHING PARTS/		
- 27	AN515-8-16	. SCREW	2	
- 28	AN515-8-10	. SCREW	2	
- 29	AN515-8-12	. SCREW	2	
- 30	100696-D12-06-016	. SPACER.	2	
- 31	100696-D12-06-008	. SPACER.	2	
	AN960-8	. WASHER.	3	
	AN365-832	. NUT	3	
		----*----		

C45H-4-43

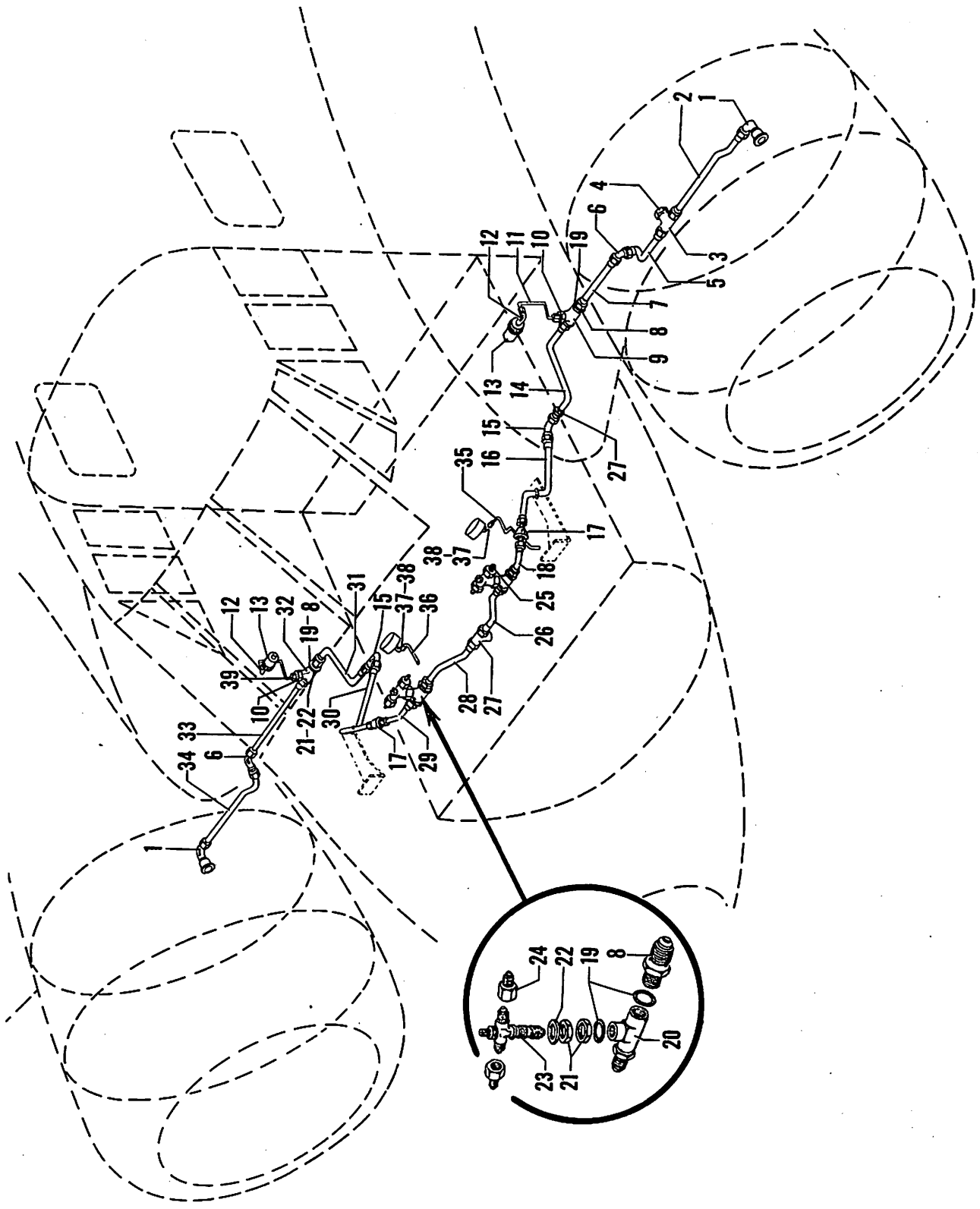

Figure 43. Body Vacuum System Piping Installation

FIG. & INDEX NO.	PART NO.	DESCRIPTION 1 2 3 4 5 6 7	UNITS PER ASSY	USABLE ON CODE
43	694-189790	PIPING INSTL,BODY VACUUM SYSTEM /SEE FIG. 1 FOR NHA/	1	A-1,B
	694-189780	PIPING INSTL,BODY VACUUM SYSTEM /SEE FIG. 1 FOR NHA/	1	A-2
- 1	AN822-10D	. ELBOW,90 DEGREE	2	
- 2	407-189670	. TUBE ASSY,BODY VACUUM SYSTEM LH	1	
- 3	AN824-10D	. TEE	1	
- 4	AN929-10	. CAP	1	
- 5	407-189753	. TUBE ASSY,BODY VACUUM SYSTEM LH	1	
- 6	AN837-10D	. ELBOW,45 DEGREE	2	
- 7	894-189783	. TUBE ASSY,BODY VACUUM SYSTEM RH	1	
- 8	AN815-10D	. UNION	8	
- 9	AN926-10D	. TEE	1	A-1,B
	AN938-10D	. TEE	1	A-2
- 10	AN919-13D	. REDUCER	2	
- 11	894-189784	. TUBE ASSY,VACUUM PRESSURE WARNING LH	1	
- 12	4CCT-D	. ELBOW,/45681/	2	
- 13	555-3685	. UNIT,VACUUM SYSTEM WARNING /71688/	2	
- 14	894-189785	. TUBE ASSY,BODY VACUUM SYSTEM LH	1	
- 15	AN833-10D	. ELBOW,90 DEGREE	2	
- 16	694-189786	. TUBE ASSY,VACUUM SYSTEM LH	1	
- 17	1111-517704	. VALVE,CHECK /92003/	2	
- 18	694-189788	. TUBE ASSY,VACUUM SYSTEM LH	1	
- 19	AN902-10	. GASKET	9	
- 20	AN938-10D	. TEE	2	
- 21	AN824-10D	. NUT	8	
- 22	AN960D1416	. WASHER	8	
- 23	694-189763	. VALVE ASSY,VACUUM SYSTEM RESTRICTOR	2	
- 24	404-189803	. ADAPTER	3	
- 25	AN929-10	. CAP ASSY	1	A-2
- 26	894-189788	. TUBE ASSY,VACUUM SYSTEM LH	1	A-1,B
	694-189784	. TUBE ASSY,VACUUM SYSTEM LH	1	A-2
	106200H-10-15	. HOSE	2	A-2
- 27	AN824-10D	. TEE	1	A-1,B
	AN6119-2	. VALVE,SUCTION RELIEF	1	A-2
- 28	894-189789	. TUBE ASSY,VACUUM SYSTEM RH	1	A-1,B
	694-189785	. TUBE ASSY,VACUUM SYSTEM RH	1	A-2
- 29	694-189798	. TUBE ASSY,VACUUM SYSTEM RH	1	
- 30	694-189799	. TUBE ASSY,VACUUM SYSTEM RH	1	
- 31	694-189793	. TUBE ASSY,VACUUM SYSTEM RH	1	
- 32	AN938-10D	. TEE	1	
- 33	894-189795	. TUBE ASSY,VACUUM SYSTEM RH	1	
- 34	407-189671	. TUBE ASSY,VACUUM SYSTEM RH	1	
- 35	694-189796	. TUBE ASSY,SUCTION GAGE LH	1	
- 36	694-189797	. TUBE ASSY,SUCTION GAGE RH	1	
- 37	AN832-4D	. UNION	2	
- 38	AN816-4D	. NIPPLE	2	
- 39	894-189794	. TUBE ASSY,VACUUM PRESSURE WARNING RH	1	

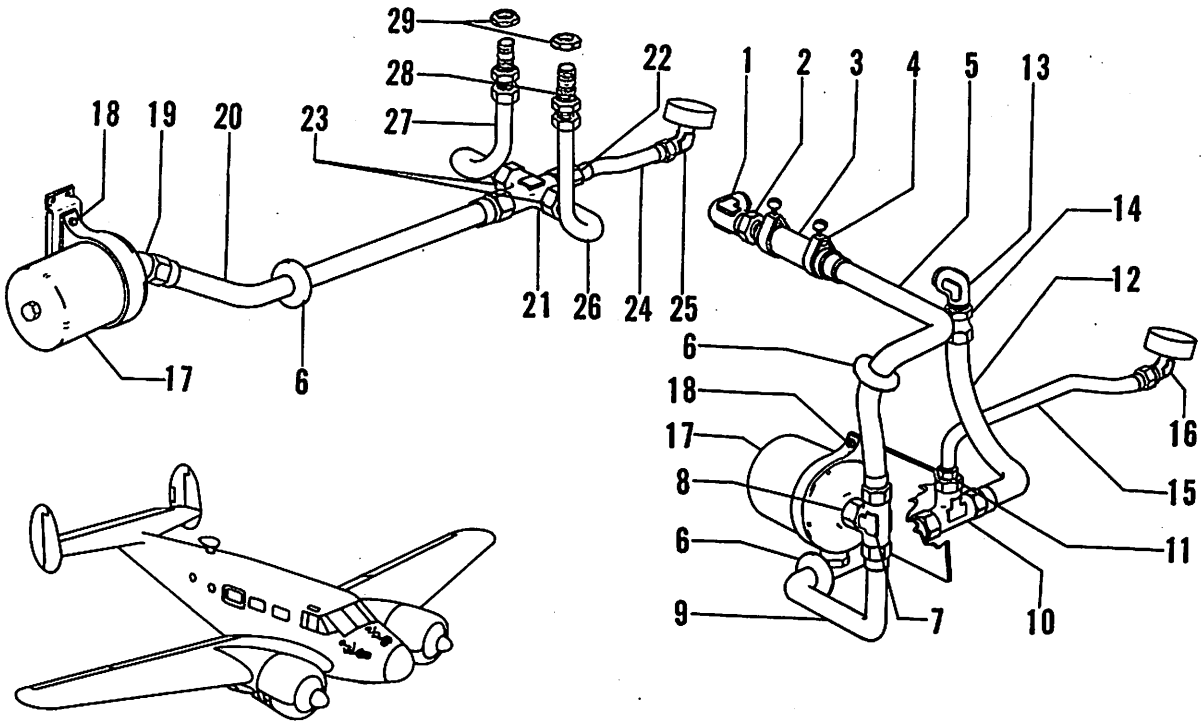

Figure 44. Centralized Air Filter Installation

C45H-4-44

FIG. & INDEX NO.	PART NO.	DESCRIPTION 1 2 3 4 5 6 7	UNITS PER ASSY	USABLE ON CODE
44	694-183890	FILTER INSTL,CENTRALIZED AIR. /SEE FIG. 1 FOR NHA/	1	A-1,B
- 1	AN914-4D	. ELBOW,90 DEGREE	1	A-1,B
- 2	AN840-10D	. ADAPTER	1	A-1,B
- 3	106200H-10-26	. HOSE.	1	A-1,B
- 4	AN737-34	. CLAMP	2	A-1,B
- 5	734-183883	. TUBE ASSY,AIR FILTER TO AUTO PILOT.	1	A-1,B
- 6	AN931-16-22	. GROMMET	3	A-1,B
- 7	AN825-10D	. TEE	1	A-1,B
- 8	AN912-7	. BUSHING	1	A-1,B
- 9	734-183894	. TUBE ASSY,AFT VACUUM LH	1	A-1,B
- 10	AN824-10D	. TEE	1	A-1,B
- 11	784-189675	. BUSHING,MODIFIED.	1	A-1,B
- 12	694-183888	. TUBE ASSY,AIR FILTER LH	1	A-1,B
- 13	AN833-10D	. ELBOW,90 DEGREE	1	A-1,B
	AN960D1416	. WASHER.	1	A-1,B
- 14	AN924-10D	. NUT	1	A-1,B
- 15	734-183893	. TUBE ASSY,FILTER TO VACUUM GAGE LH.	1	A-1,B
- 16	AN823-4D	. ELBOW,45 DEGREE	1	A-1,B
- 17	AN5822-1	. FILTER,AIR /GFAE/	1	A-1,B
		/ATTACHING PARTS/		
- 18	AN4-6A	. BOLT.	2	A-1,B
	AN960-416	. WASHER.	1	
	AN365-428	. NUT	1	
		-----*-----	1	

FIG. & INDEX NO.	PART NO.	DESCRIPTION 1 2 3 4 5 6 7	UNITS PER ASSY	USABLE ON CODE
44 - 19	AN823-10D	ELBOW,45 DEGREE	1	A-1,B
	AN912-7	BUSHING	1	A-1,B
- 20	694-183884-28	TUBE ASSY,CENTRALIZED FILTER TO CROSS RH	1	A-1,B
- 21	AN827-10D	CROSS	1	A-1,B
- 22	784-189675	BUSHING,MODIFIED	1	A-1,B
- 23	404-189803	ADAPTER,VACUUM SYSTEM	2	A-1,B
- 24	694-183884-16	TUBE ASSY,CROSS TO VACUUM GAGE RH	1	A-1,B
- 25	AN823-4D	ELBOW,45 DEGREE	1	A-1,B
- 26	694-183884-20	TUBE ASSY,INSTRUMENT PANEL	1	A-1,B
- 27	694-183884-24	TUBE ASSY,INSTRUMENT PANEL	1	A-1,B
- 28	AN832-6D	UNION	2	A-1,B
	AN960D916	WASHER	2	A-1,B
- 29	AN924-6D	NUT	2	A-1,B

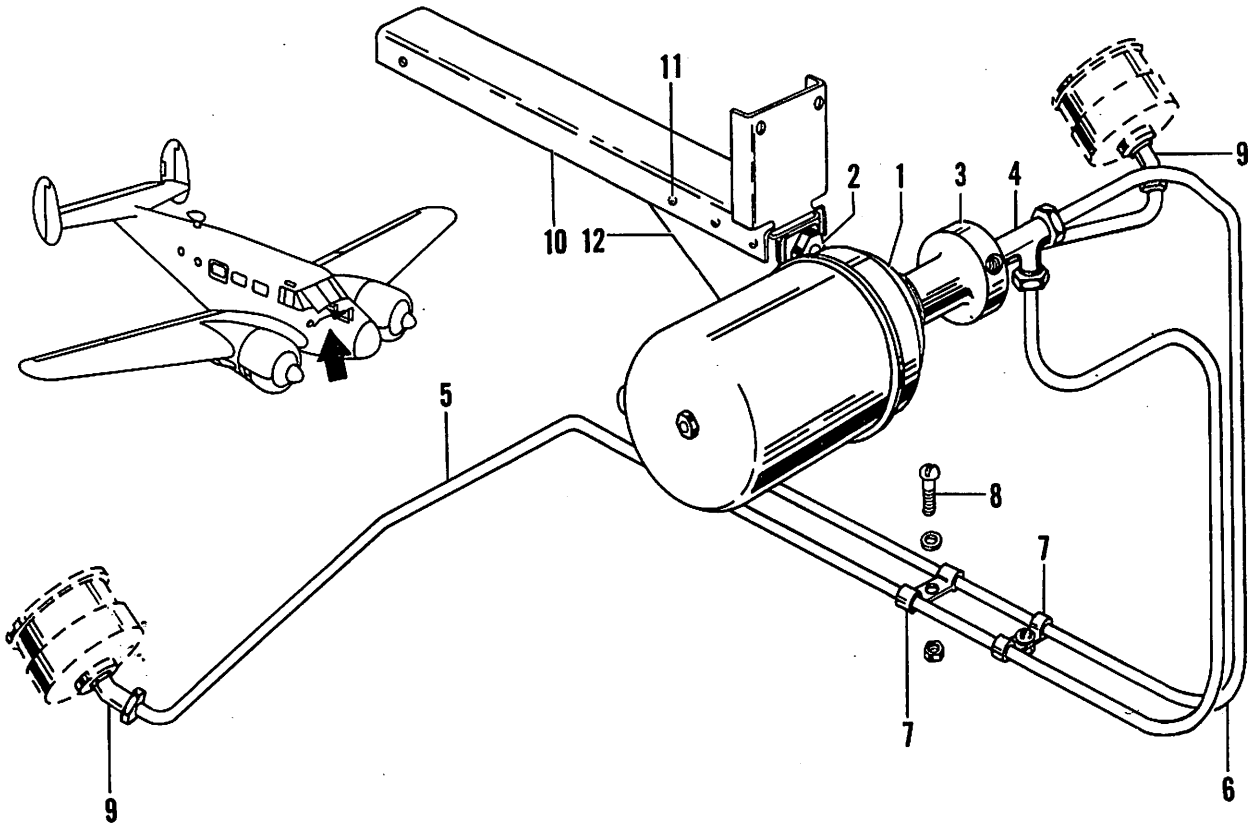

Figure 45. Centralized Air Filter Installation

C45H-4-45

FIG. & INDEX NO.	PART NO.	DESCRIPTION 1 2 3 4 5 6 7	UNITS PER ASSY	USABLE ON CODE
45	894-183892-1	FILTER INSTL,CENTRALIZED AIR.	1	A-2
		/SEE FIG. 1 FOR NHA/		
- 1	AN5822-1	. FILTER,AIR.	1	A-2
		/ATTACHING PARTS/		
- 2	AN4-6A	. BOLT.	2	
	AN960-416L	. WASHER.	2	
	AN365-428	. NUT	2	
		-----*-----		
- 3	894-183888	. MANIFOLD,CENTRALIZED AIR FILTER	1	A-2
- 4	AN826-4D	. TEE	1	A-2
- 5	894-183898	. TUBE ASSY,RH.	1	A-2
- 6	694-183895	. TUBE ASSY,LH.	1	A-2
- 7	AN742-6C	. CLAMP	2	A-2
		/ATTACHING PARTS/		
- 8	AN520-10-10	. SCREW	1	
	AN936A10	. WASHER.	1	
	AN345-10	. NUT	1	
		-----*-----		
- 9	AN823-4D	. ELBOW	2	A-2
- 10	894-183899	. CHANNEL,CENTRALIZED AIR FILTER.	1	A-2
		/ATTACHING PARTS/		
- 11	AN515-8-6	. SCREW	4	
	AN960-8	. WASHER.	4	
	AN365-832	. NUT	4	
		-----*-----		
- 12	404-183898	. BRACKET,CENTRALIZED AIR FILTER.	1	A-2

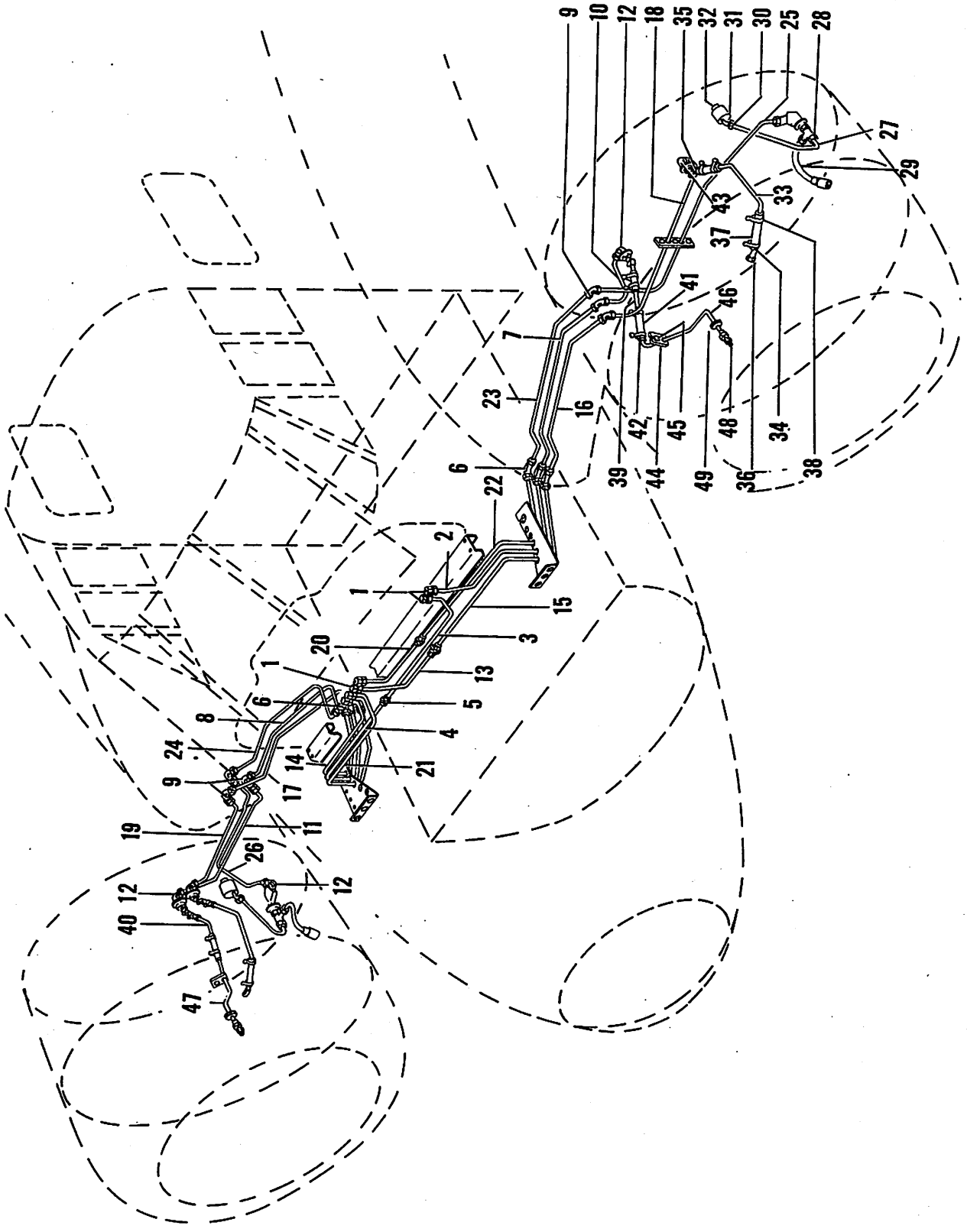

Figure 46. Engine Instrument Piping Installation

FIG. & INDEX NO.	PART NO.	DESCRIPTION 1 2 3 4 5 6 7	UNITS PER ASSY	USABLE ON CODE
46	694-189760	PIPING INSTL,FUSELAGE PRESSURE. . . . . /SEE FIG. 1 FOR NHA/	1	
- 1	AN832-4D	. UNION	6	
	AN960A716	. WASHER.	12	
	AN924-4D	. NUT	6	
- 2	694-189777	. TUBE ASSY,MANIFOLD PRESSURE LH.	1	
- 3	694-189774	. TUBE ASSY,MANIFOLD PRESSURE RH.	1	
- 4	694-189773	. TUBE ASSY,MANIFOLD PRESSURE RH.	1	
- 5	AN815-4D	. UNION	3	
- 6	AN833-4D	. ELBOW,90 DEGREE	6	
	AN924-4D	. NUT	6	
	AN960A716	. WASHER.	12	
- 7	407-189692	. TUBE ASSY,MANIFOLD PRESSURE LH.	1	
- 8	407-189698	. TUBE ASSY,MANIFOLD PRESSURE RH.	1	
- 9	AN837-4D	. ELBOW,45 DEGREE	6	
	AN924-4D	. NUT	6	
	AN960A716	. WASHER.	12	
- 10	407-189695	. TUBE ASSY,MANIFOLD PRESSURE LH.	1	
- 11	407-189726	. TUBE ASSY,MANIFOLD PRESSURE RH.	1	
- 12	AN822-4D	. ELBOW,90 DEGREE	6	
- 13	694-189762	. TUBE ASSY,OIL PRESSURE LH	1	
- 14	694-189771	. TUBE ASSY,OIL PRESSURE RH	1	
- 15	694-189776	. TUBE ASSY,OIL PRESSURE LH	1	
- 16	407-189691	. TUBE ASSY,OIL PRESSURE LH	1	
- 17	407-189697	. TUBE ASSY,OIL PRESSURE RH	1	
- 18	407-189694	. TUBE ASSY,OIL PRESSURE LH	1	
- 19	407-189727	. TUBE ASSY,OIL PRESSURE RH	1	
- 20	694-189761	. TUBE ASSY,FUEL PRESSURE LH.	1	
- 21	694-189772	. TUBE ASSY,FUEL PRESSURE RH.	1	
- 22	694-189778	. TUBE ASSY,FUEL PRESSURE LH.	1	
- 23	407-189693	. TUBE ASSY,FUEL PRESSURE LH.	1	
- 24	407-189699	. TUBE ASSY,FUEL PRESSURE RH.	1	
- 25	404-189671	. TUBE ASSY,FUEL PRESSURE LH.	1	
- 26	407-189725	. TUBE ASSY,FUEL PRESSURE RH.	1	
	694-189679	PIPING INSTL,ENGINE SECTION INSTRUMENT. . . . /SEE FIG. 1 FOR NHA/	1	
- 27	AN6264-4-12	. HOSE ASSY,FUEL PRESSURE	2	
- 28	AN826-4	. TEE	2	
- 29	694-189324	. TUBE ASSY,FUEL PRESSURE WARNING	2	
- 30	AN823-4	. ELBOW,45 DEGREE	2	
- 31	NO NUMBER	. UNIT,FUEL PRESSURE WARNING /TYPE C-3/ . . . . /SPECIFICATION 94-32215/	2	
- 32	189324	. PLUG,FUEL PRESSURE WARNING UNIT	2	
- 33	704-189763	. TUBE ASSY,OIL PRESSURE.	2	
- 34	189759	. FITTING,45 DEGREE OIL PRESSURE.	2	
- 35	189746	. FITTING ASSY,OIL PRESSURE RESTRICTED. . . .	2	
- 36	AN844-4D	. ELBOW,45 DEGREE	2	
- 37	106200FR-4-15	. HOSE.	4	
- 38	AN737-22	. CLAMP,HOSE.	8	
- 39	814-189701	. TUBE ASSY,MANIFOLD PRESSURE LH.	1	
- 40	84-189615	. TUBE ASSY,MANIFOLD PRESSURE RH.	1	
- 41	106200H-4-15	. HOSE.	4	
- 42	AN737-22	. CLAMP,HOSE.	8	
- 43	AN844-4D	. ELBOW,45 DEGREE	2	
- 44	18S9322	. BLOCK,PIPING SUPPORT. . . . . /ATTACHING PARTS/	2	
- 45	AN3-22A	. BOLT.	2	
	AN960-10	. WASHER.	2	
	AN365-1032	. NUT	2	
		----*----		
- 46	84-189618	. TUBE ASSY,MANIFOLD PRESSURE LH.	1	
- 47	84-189619	. TUBE ASSY,MANIFOLD PRESSURE RH.	1	
- 48	189717	. FITTING,/MAKE FR AN811FT4 NIPPLE/	2	
- 49	AN931-10-14	. GROMMET	2	

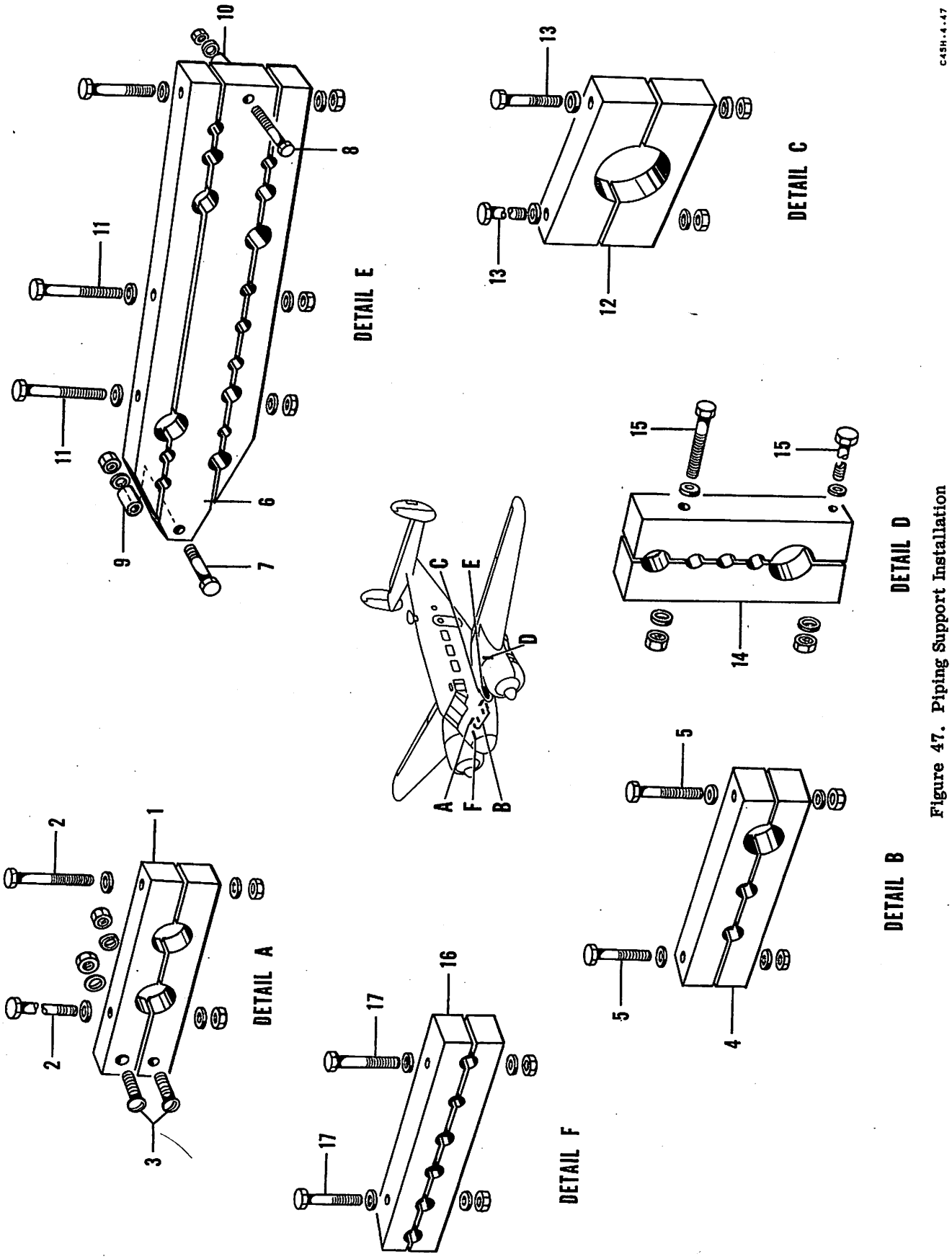

Figure 47. Piping Support Installation

FIG. & INDEX NO.	PART NO.	DESCRIPTION 1 2 3 4 5 6 7	UNITS PER ASSY	USABLE ON CODE
47	694-189697	SUPPORT INSTL,PIPING /SEE FIG. 1 FOR NHA/	1	
- 1	407-189710	. BLOCK ASSY,PIPING SUPPORT	2	
		/ATTACHING PARTS/		
- 2	AN3-15A	. BOLT.	2	
	AN960-10	. WASHER.	4	
	AN365-1032	. NUT	2	
- 3	AN515-8-16	. SCREW	1	
	AN960-8	. WASHER.	1	
	AN365-832	. NUT	1	
		----*----		
- 4	407-189704	. BLOCK ASSY,PIPING SUPPORT	4	
		/ATTACHING PARTS/		
- 5	AN3-11A	. BOLT.	2	
	AN960-10	. WASHER.	4	
	AN365-1032	. NUT	2	
		----*----		
- 6	407-189706	. BLOCK ASSY,PIPING SUPPORT LH.	1	
	407-189706-1	. BLOCK ASSY,PIPING SUPPORT RH.	1	
		/ATTACHING PARTS/		
- 7	AN3-13A	. BOLT.	1	
- 8	AN3-11A	. BOLT.	1	
- 9	100696-D12-07-014	. SPACER.	1	
- 10	100696-D12-07-007	. SPACER.	1	
- 11	AN3-24A	. BOLT.	3	
	AN960-10	. WASHER.	5	
	AN365-1032	. NUT	5	
		----*----		
- 12	407-189705	. BLOCK ASSY,PIPING SUPPORT	1	
		/ATTACHING PARTS/		
- 13	AN3-20A	. BOLT.	2	
	AN960-10	. WASHER.	4	
	AN365-1032	. NUT	2	
		----*----		
- 14	407-189709	. BLOCK ASSY,PIPING SUPPORT	1	
		/ATTACHING PARTS/		
- 15	AN3-14A	. BOLT.	2	
	AN960-10	. WASHER.	4	
	AN365-1032	. NUT	2	
		----*----		
- 16	404-189597	. BLOCK ASSY,PIPING SUPPORT	2	
		/ATTACHING PARTS/		
- 17	AN3-11A	. BOLT.	2	
	AN960-10	. WASHER.	4	
	AN365-1032	. NUT	2	
		----*----		

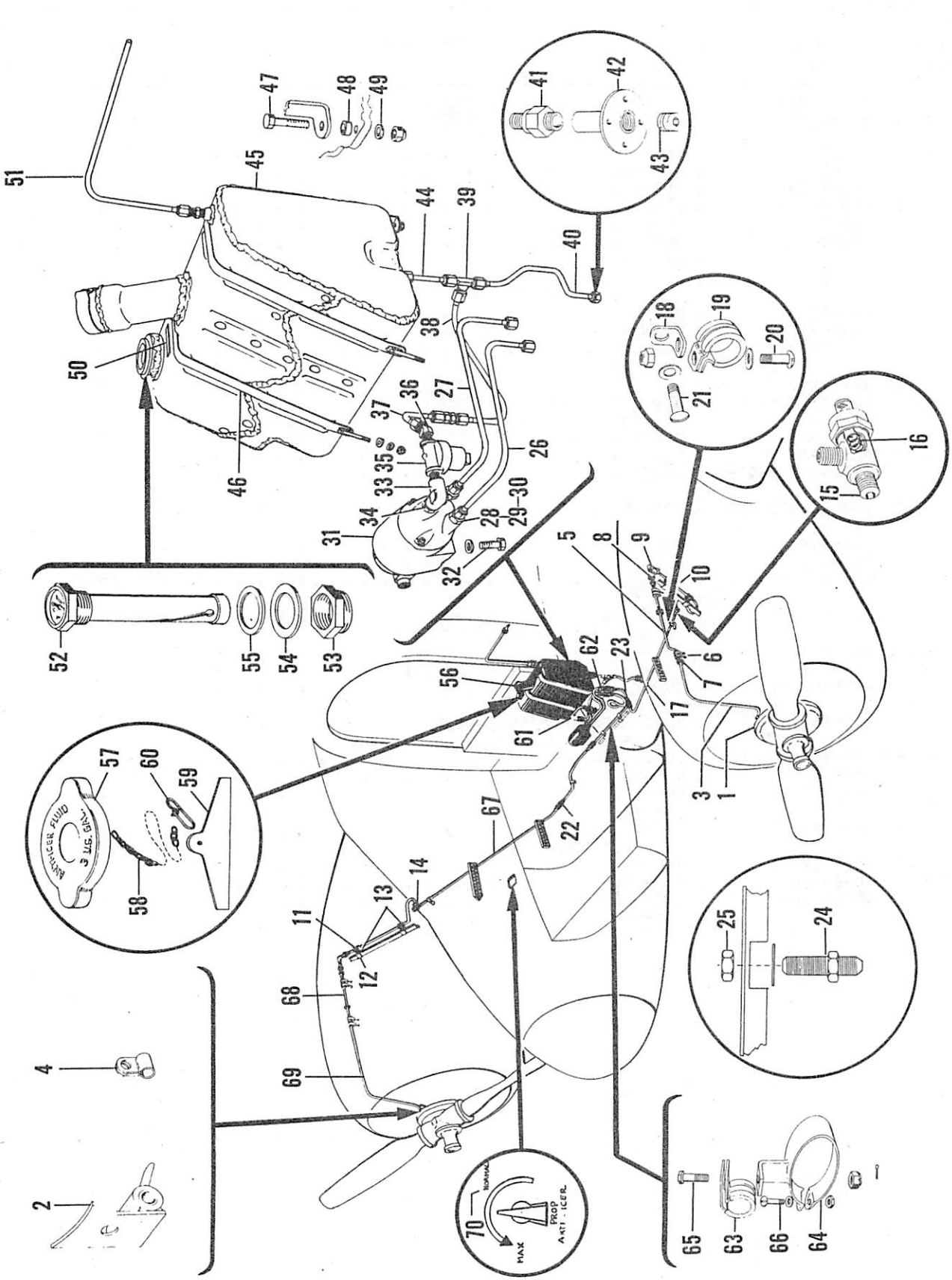

Figure 48. Anti-Icer Piping Installation

FIG. & INDEX NO.	PART NO.	DESCRIPTION 1 2 3 4 5 6 7	UNITS PER ASSY	USABLE ON CODE
48	694-189655	PIPING INSTL,ANTI-ICER /SEE FIG. 1 FOR NHA/	1	A-1,B
- 1	54884C	. RING ASSY,PROPELLER ANTI-ICER SLINGER /73030/	2	
- 2	644-189656	. RING ASSY,PROPELLER ANTI-ICER /ALTERNATE FOR 54884C/	2	
	644-189657	. NOZZLE ASSY,PROPELLER ANTI-ICER /ALTERNATE FOR 54884C/	4	
- 3	404-189508	. TUBE ASSY,ENGINE SECTION ANTI-ICER LH	1	
- 4	I189661	. CLIP,ANTI-ICER PIPING	2	A-1,B
- 5	404-189507	. TUBE ASSY,ACCESSORY SECTION ANTI-ICER	2	A-1,B
- 6	106200H-4-15	. HOSE	4	
- 7	AN737-22	. CLAMP	2	A-1,B
- 8	AN840-4D	. ADAPTER	2	
- 9	AN822-4D	. ELBOW,90 DEGREE	2	
- 10	694-189058	. TUBE ASSY,ANTI-ICER NACELLE LH	1	A-1,B
- 11	AN742D6C	. CLAMP	4	A-1,B
- 12	AN742D16	. CLAMP /ATTACHING PARTS/	4	A-1,B
- 13	AN515-8-8	. SCREW	1	
	AN960-8	. WASHER	1	
	AN365-832	. NUT	1	
		----*----		
- 14	794-189657	. VALVE ASSY,ANTI-ICER CHECK	2	
- 15	794-189657-2	. . VALVE,ANTI-ICER CHECK	1	
- 16	794-189656	. . SPRING,ANTI-ICER CHECK VALVE	1	
- 17	84-189659	. TUBE ASSY,ANTI-ICER ROOT RIB LH	1	
- 18	AN743-12	. BRACKET	2	A-1,B
- 19	AN742-6C	. CLAMP /ATTACHING PARTS/	2	A-1,B
- 20	AN515-8-7	. SCREW	1	
- 21	AN515-8-6	. SCREW	1	
	AN960-8L	. WASHER	2	
	AN365-832	. NUT	2	
		----*----		
- 22	AN815-4D	. UNION	3	
- 23	84-189669	. TUBE ASSY,ANTI-ICER OUTLET LH	1	
	84-189646	. TANK & PUMP INSTL,ANTI-ICER	1	A-1,B
- 24	3115-1HT-4D	. . UNION,BULKHEAD /45681/	3	
- 25	11-1039-1-3D	. . NUT,LOCK /45681/	3	
	100951-S031-016-100	. . WASHER	3	
- 26	84-189649	. . TUBE ASSY,ANTI-ICER FLUID LINE RH	1	
- 27	84-189650	. . TUBE ASSY,ANTI-ICER FLUID LINE LH	1	
- 28	AN815-4D	. . UNION	3	
- 29	AN902-4	. . GASKET	5	
- 30	AN811FT-4	. . NIPPLE	2	
	AN960A716L	. . WASHER	1	A-1,B
- 31	AN6100-1	. . PUMP /ATTACHING PARTS/	1	A-1,B
- 32	AN74A7	. . BOLT	4	
	100951-S-063-008-030	. . WASHER	4	
		----*----		
- 33	AN927-4D	. . ELBOW,90 DEGREE	1	A-1,B
- 34	AN816-4D	. . NIPPLE	1	
- 35	7979	. . STRAINER,/00502/	1	A-1,B
- 36	AN811CT45-4D	. . ELBOW	1	A-1,B
- 37	84-189668	. . TUBE ASSY,ANTI-ICER PUMP CONNECT	1	
- 38	84-189654	. . TUBE ASSY,ANTI-ICER DRAIN CONNECT	1	
- 39	AN811JT-4D	. . TEE	1	A-1,B
- 40	84-189647	. . TUBE ASSY,ANTI-ICER DRAIN	1	
- 41	AN811FT-4D	. . NIPPLE	1	A-1,B
- 42	I189690	. . FLANGE,ANTI-ICER DRAIN	1	
- 43	AN895B100	. . PLUG	1	
- 44	84-189652	. . TUBE ASSY,ANTI-ICER TANK CONNECT	1	
- 45	189686	. . TANK,ANTI-ICER FLUID	1	

FIG. & INDEX NO.	PART NO.	DESCRIPTION 1 2 3 4 5 6 7	UNITS PER ASSY	USABLE ON CODE
48 - 46	I189687	. . STRAP,TANK. . . . . /ATTACHING PARTS/	2	
- 47	AN3-10A	. . BOLT.	1	
- 48	100801-D3-0562	. . BUSHING	1	A-1,B
- 49	I189688	. . SPACER.	1	
	AN960-10	. . WASHER.	1	
	AN970-3	. . WASHER.	1	
	AN365-1032	. . NUT	1	
		----*----		
- 50	884-180096	. . PLACARD	1	
- 51	84-189648	. . TUBE ASSY,ANTI-ICER TANK VENT	1	
- 52	189677	. . GAGE,ANTI-ICER FLUID TANK	1	
- 53	189680	. . ADAPTER,ANTI-ICER TANK MAGNETIC GAGE. . . .	1	
- 54	I189694	. . GASKET,ANTI-ICER FLUID TANK GAGE.	1	
- 55	189685	. . GASKET,ANTI-ICER FLUID TANK GAGE.	1	
- 56	I189712	. . CAP ASSY,ANTI-ICER FLUID TANK	1	
- 57	I189712-3	. . . CAP,/MAKE FR /81910/ CA-2137/	1	
- 58	I189712-2	. . . CHAIN,SAFETY /MAKE FR 109615-4-080/ . . .	1	
- 59	S-177	. . . CATCH,CAP SAFETY.	1	
- 60	39A4240	. . . HOOK,/GFAE/	2	
- 61	404-189599	. TUBE ASSY,ANTI-ICER LINE.	1	A-1,B
- 62	84-189664	. TUBE ASSY,ANTI-ICER SIDE RH	1	A-1,B
- 63	AN742D6C	. CLAMP	2	A-1,B
- 64	84-189693	. BRACKET ASSY,CROSSFEED & ANTI-ICER PIPING . . /ATTACHING PARTS/	2	
- 65	AN3-7	. BOLT.	1	
	AN310-3	. NUT	1	
	AN380-2-2	. PIN,COTTER.	1	
- 66	AN515-8-10	. SCREW	1	
	AN960-8	. WASHER.	1	
	AN365-832	. NUT	1	
		----*----		
- 67	84-189665	. TUBE ASSY,ANTI-ICER ROOT RIB RH	1	
- 68	694-189666	. TUBE ASSY,ANTI-ICER NACELLE RH.	1	
- 69	404-189509	. TUBE ASSY,ENGINE SECTION ANTI-ICER RH	1	
- 70	694-180085	. PLACARD	1	

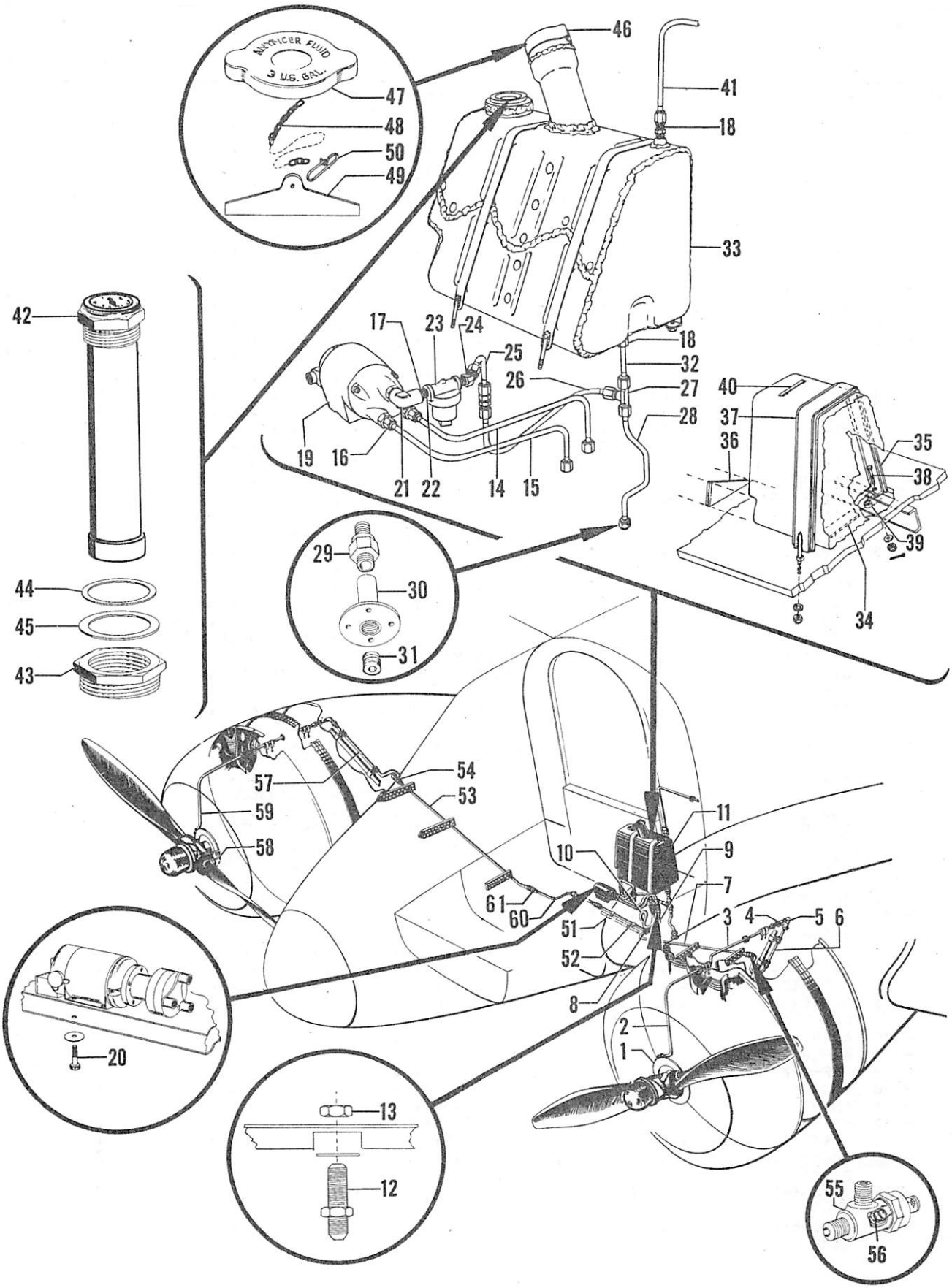

Figure 49. Hydromatic Propeller Anti-Icer Installation

C45H-4.49

FIG. & INDEX NO.	PART NO.	DESCRIPTION 1 2 3 4 5 6 7	UNITS PER ASSY	USABLE ON CODE
49	894-189692	PIPING INSTL,HYDROMATIC PROPELLER ANTI-ICER . . /SEE FIG. 1 FOR NHA/	1	A-2
- 1	54884C	. RING ASSY,PROPELLER ANTI-ICER SLINGER /73030/	2	
	644-189656	. RING ASSY,PROPELLER ANTI-ICER . . . . . /ALTERNATE FOR 54884C/	2	
	644-189657	. NOZZLE ASSY,PROPELLER ANTI-ICER . . . . . /ALTERNATE FOR 54884C/ /ATTACHING PARTS/	2	
	AN502-416-6	. SCREW	4	
	AN960-416	. WASHER. . . . . ----*----	4	
- 2	404-189508	. TUBE,PROPELLER ANTI-ICER.	1	
- 3	404-189507	. TUBE,PROPELLER ANTI-ICER.	2	A-2
- 4	AN840-4D	. ADAPTER	2	
- 5	AN822-4D	. ELBOW,90 DEGREE	2	
- 6	694-189658	. TUBE ASSY,PROPELLER ANTI-ICER	1	A-2
- 7	84-189659	. TUBE ASSY,PROPELLER ANTI-ICER	1	
- 8	AN815-4D	. UNION	3	
- 9	84-189669	. TUBE ASSY,PROPELLER ANTI-ICER	1	
- 10	814-189663	. TUBE ASSY,PROPELLER ANTI-ICER	1	A-2
- 11	894-189646	. TANK & PUMP INSTL,ANTI-ICER	1	A-2
- 12	3115-1HT4D	. . UNION,BULKHEAD /45681/ /GFAE/	3	
- 13	11-1039-1-3D	. . NUT,LOCK /GFAE/	3	
	100951-S031-016-100	. . WASHER.	3	
- 14	84-189649	. . TUBE ASSY,ANTI-ICER FLUID LINE RH	1	
- 15	84-189650	. . TUBE ASSY,ANTI-ICER FLUID LINE LH	1	
- 16	AN815-4D	. . UNION	3	
- 17	AN902-4	. . GASKET.	2	
- 18	AAF811FT-4	. . NIPPLE.	2	A-2
	AN960D716L	. . WASHER. . . . . /USE WHEN AN6100-1 OR 20820-1 PUMP IS USED/	1	A-2
- 19	AN6100-1	. . PUMP ASSY,PROPELLER ANTI-ICER /GFAE/. . . .	1	
	J2.5-27.5-D-4-1/8	. . PUMP ASSY,/ALTERNATE FOR AN6100-1/ /GFAE/ .	1	
	20820-1	. . PUMP ASSY,/ALTERNATE FOR AN6100-1/ /GFAE/ . /ATTACHING PARTS/	1	
- 20	AN74A7	. . BOLT. . . . . /USE WHEN AN6100-1 OR 20820-1 PUMP IS USED/	4	
	AN74A7	. . BOLT. . . . . /USE WHEN J2.5-27.5-D-4-1/8 PUMP IS USED/	3	
	100951-S063-008-030	. . WASHER. . . . . /USE WHEN AN6100-1 OR 20820-1 PUMP IS USED/	4	
	100951-S063-008-030	. . WASHER. . . . . /USE WHEN J2.5-27.5-D-4-1/8 PUMP IS USED/ ----*----	3	
- 21	AN939D4	. . ELBOW,90 DEGREE	1	A-2
- 22	AN816-4D	. . NIPPLE.	1	
	AN816-4D	. . NIPPLE. . . . . /USE WHEN J2.5-27.5-D-4-1/8 PUMP IS USED/	3	
- 23	A7979	. . STRAINER,PROPELLER ANTI-ICER /GFAE/	1	
- 24	AAF811CT4D	. . ELBOW,90 DEGREE	1	A-2
- 25	84-189668	. . TUBE ASSY,ANTI-ICER PUMP CONNECT.	1	
- 26	84-189654	. . TUBE ASSY,ANTI-ICER PUMP CONNECT.	1	
- 27	AAF811JT4D	. . TEE	1	A-2
- 28	84-189647	. . TUBE ASSY,ANTI-ICER DRAIN	1	
- 29	AAF811FT4D	. . NIPPLE.	1	A-2
- 30	I189690	. . FLANGE,ANTI-ICER DRAIN.	1	
- 31	AN932C2	. . PLUG.	1	
- 32	84-189652	. . TUBE ASSY,ANTI-ICER TANK CONNECT.	1	
- 33	189686	. . TANK,ANTI-ICER FLUID.	1	
- 34	104036-1-0010-0608	. . PAD,FELT.	2	
- 35	104036-2-0010-3000	. . PAD,FELT.	2	
- 36	104036-2-0104-0408	. . PAD,FELT.	1	

FIG. & INDEX NO.	PART NO.	DESCRIPTION 1 2 3 4 5 6 7	UNITS PER ASSY	USABLE ON CODE
49 - 37	I189687	. . STRAP,TANK.	2	A-2
		/ATTACHING PARTS/		
- 38	AN3-10A	. . BOLT.	2	
- 39	I189688	. . SPACER.	2	
	AN960-10	. . WASHER.	2	
	AN970-3	. . WASHER.	2	
	AN365-1032	. . NUT	4	
	100696-D10-08-018	. . SPACER.	3	
		/USE WHEN J2.5-27.5-D-4-1/8 PUMP IS USED/		
	100696-D10-08-018	. . SPACER.	4	
		/USE WHEN AN6100-1 OR 20820-1 PUMP IS USED/		
		----*----		
- 40	884-180096	. . PLACARD	1	
- 41	84-189648	. . TUBE ASSY,ANTI-ICER TANK VENT	1	
- 42	189677	. . GAGE,ANTI-ICER FLUID TANK	1	
- 43	189680	. . ADAPTER,ANTI-ICER TANK MAGNETIC GAGE. . . .	1	
- 44	I189694	. . GASKET,ANTI-ICER FLUID TANK GAGE.	1	
- 45	189685	. . GASKET,ANTI-ICER FLUID TANK GAGE.	1	
- 46	I189712	. . CAP ASSY,ANTI-ICER FLUID TANK	1	
- 47	I189712-3	. . . CAP,/MAKE FR /81910/ CA-2137/	1	
- 48	I189712-2	. . . CHAIN,SAFETY /MAKE FR 109615-4-080/ . . .	1	
- 49	S-177	. . . CATCH,CAP SAFETY.	1	
- 50	39A4240	. . . HOOK,/GFAE/	2	
- 51	84-189693	. BRACKET ASSY,CROSS FEED & ANTI-ICER PIPING. .	2	
		/ATTACHING PARTS/		
- 52	AN3-7	. BOLT.	2	
	AN310-3	. NUT	2	
	AN380-2-2	. PIN,COTTER.	2	
		----*----		
- 53	84-189665	. TUBE ASSY,PROPELLER ANTI-ICER	1	
- 54	794-189657	. VALVE ASSY,ANTI-ICER CHECK.	2	
- 55	794-189657-2	. . VALVE,ANTI-ICER CHECK	1	
- 56	794-189656	. . SPRING,ANTI-ICER CHECK VALVE.	1	
- 57	694-189666	. TUBE ASSY,PROPELLER ANTI-ICER	1	
- 58	106200H-4-15	. HOSE,AIRCRAFT SYNTHETIC	4	
- 59	404-189509	. TUBE,PROPELLER ANTI-ICER.	1	
- 60	84-189664	. TUBE,PROPELLER ANTI-ICER.	1	
- 61	AN815-4D	. UNION	1	

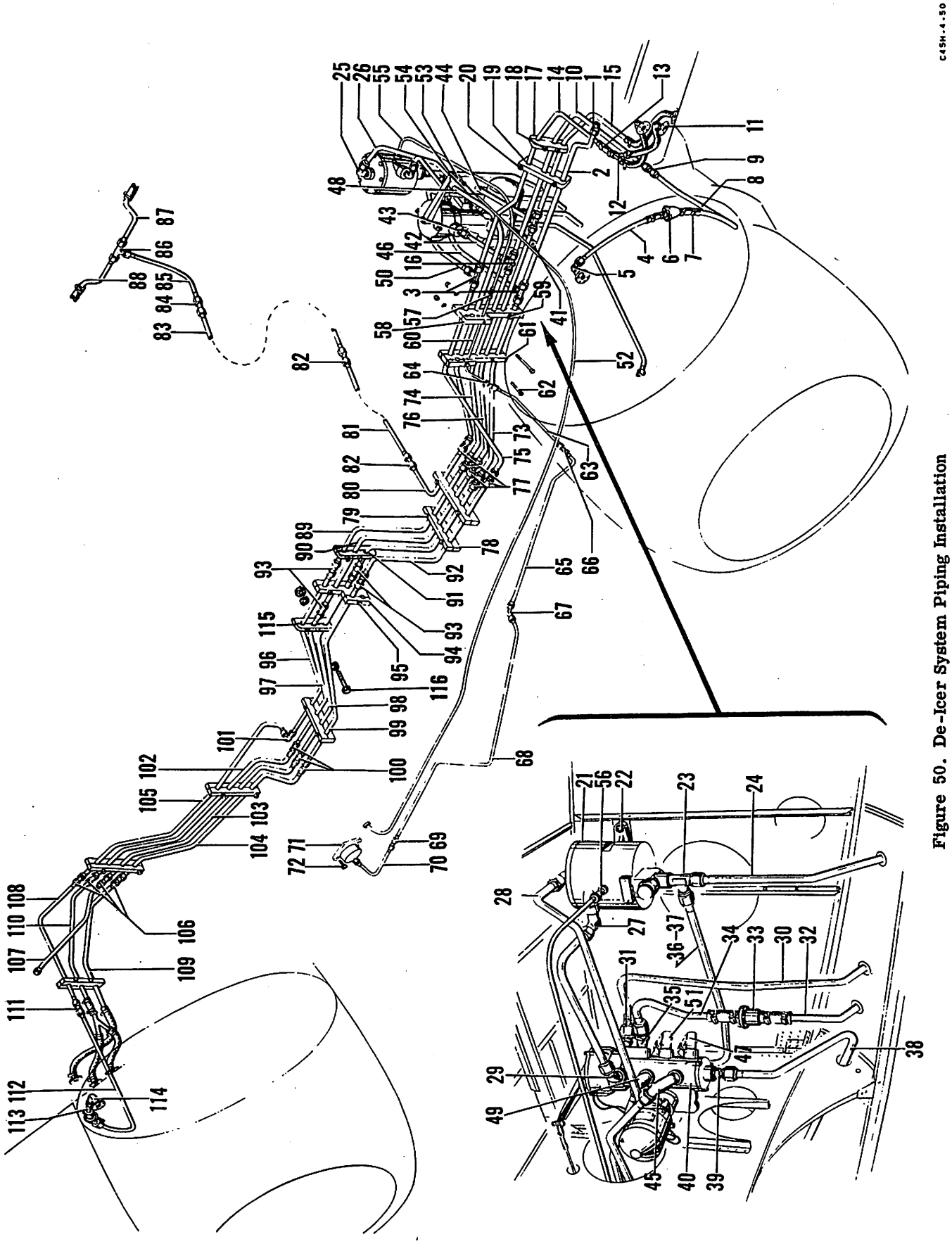

Figure 50. De-Icer System Piping Installation

FIG. & INDEX NO.	PART NO.	DESCRIPTION 1 2 3 4 5 6 7	UNITS PER ASSY	USABLE ON CODE
50	694-189678	PIPING INSTL,DE-ICER SYSTEM/SEE FIG. 1 FOR NHA/	1	A-1,B
	694-189678-1	PIPING INSTL,DE-ICER SYSTEM/SEE FIG. 1 FOR NHA/	1	A-2
	900-189719	. TUBE ASSY,OUTER WING DE-ICER LH /SEE FIG. 17/	1	
	84-189569	. TUBE ASSY,OUTER WING DE-ICER RH /SEE FIG. 18/	1	
	900-189717	. TUBE ASSY,OUTER WING DE-ICER LH & RH. . . . /SEE FIG. 17 & 18/	2	
	900-189718	. TUBE ASSY,INBD WING DE-ICER LH & RH . . . . /SEE FIG. 17 & 18/	2	
- 1	AAF811HT10D	. UNION,/SEE FIG. 17 & 18/.	4	
- 2	189464	. TUBE ASSY,PRESS. LINE WING CENTER SECTION LH.	1	
- 3	AAF811JT10D	. TEE	3	
- 4	189422	. TUBE ASSY,PRESSURE LINE NACELLE LH.	1	
- 5	AAF811CT10D	. ELBOW	1	
- 6	W1500-5/8	. VALVE,CHECK /79318/	2	
- 7	106200H-10-11	. HOSE.	8	
- 8	189478	. TUBE ASSY,PRESSURE LINE NACELLE LH.	1	
- 9	AAF811HT10D	. UNION	1	
- 10	189466	. TUBE ASSY,PRESSURE LINE NACELLE LH.	1	
- 11	189497	. HOSE,WING BOOT CONNECTOR.	6	
- 12	I189673	. NIPPLE ASSY,DE-ICER DOUBLE.	2	
- 13	106200H-10-11	. HOSE.	2	
- 14	189465	. TUBE ASSY,PRESSURE LINE NACELLE LH.	1	
- 15	189467	. TUBE ASSY,PRESSURE LINE NACELLE LH.	1	
- 16	I189666	. PLUG ASSY,DE-ICER TESTING	1	
- 17	84-189598	. SUPPORT,DE-ICER PIPING NACELLE. . . . . ./ATTACHING PARTS/	2	
- 18	AN3-13A	. BOLT.	2	
	AN960-10L	. WASHER.	4	
	AN365-1032	. NUT	2	
		----*----		
- 19	84-189677	. BLOCK,DE-ICER PIPING ROOT RIB LH. . . . . /ATTACHING PARTS/	5	
- 20	AN3-14A	. BOLT.	2	
	AN960-10L	. WASHER.	2	
	AN365-1032	. NUT	2	
		----*----		
- 21	NO NUMBER	. SEPARATOR,OIL /MODEL 1A/ /TYPE 558/ /93575/ . /ATTACHING PARTS/	1	
- 22	AN4-6	. BOLT.	2	
	AN960-416	. WASHER.	2	
	AN310-4	. NUT	2	
	AN380-2-2	. PIN,COTTER.	2	
		----*----		
- 23	AAF811RT10	. TEE	1	
- 24	189420	. TUBE ASSY,OIL SEPARATOR VENT.	1	
- 25	AAF811CT10	. ELBOW	2	
- 26	189473	. TUBE ASSY,OIL SEPARATOR INLET	1	
- 27	AAF811CT10	. ELBOW	1	
- 28	189472	. TUBE ASSY,DE-ICER VALVE INLET	1	
- 29	AAF811CT45-10	. ELBOW,45 DEGREE	1	
- 30	189417	. TUBE ASSY,DE-ICER VALVE VENT LINE	1	
- 31	AAF811FT-10	. NIPPLE.	1	
- 32	189421	. TUBE,VENT	1	
- 33	W1500-5/8	. VALVE,CHECK /79318/	1	
- 34	189418	. TUBE ASSY,DE-ICER VALVE OUTLET.	1	
- 35	AAF811CT45-10	. ELBOW	1	
- 36	189419	. TUBE ASSY,DE-ICER VALVE OUTLET.	1	
- 37	AAF811CT10	. ELBOW	1	
- 38	407-189657	. TUBE ASSY,DE-ICER DISTRIBUTOR VALVE TO VACUUM LINE	1	
- 39	AN816-10	. NIPPLE.	1	

FIG. & INDEX NO.	PART NO.	DESCRIPTION 1 2 3 4 5 6 7	UNITS PER ASSY	USABLE ON CODE
50 - 40	94-189682	• VALVE ASSY,DE-ICER DISTRIBUTOR.	1	
		/ATTACHING PARTS/		
- 41	AN500A416-8	• SCREW	2	
	AN3-6	• BOLT.	1	
	AN310-3	• NUT	1	
	AN380-2-2	• PIN,COTTER.	1	
	AN960-10	• WASHER.	1	
		----*----		
- 42	189470	• TUBE ASSY,DE-ICER VALVE OUTLET.	1	
- 43	AAF811FT10	• NIPPLE.	1	
- 44	404-189468	• TUBE ASSY,DE-ICER VALVE OUTLET.	1	
- 45	AAF811CT45-10	• ELBOW	1	
- 46	189447	• TUBE ASSY,DE-ICER VALVE OUTLET.	1	
- 47	AAF811CT10	• ELBOW	1	
- 48	189469	• TUBE ASSY,DE-ICER VALVE OUTLET.	1	
- 49	AAF811CT10	• ELBOW	1	
- 50	189471	• TUBE ASSY,DE-ICER VALVE OUTLET.	1	
- 51	AAF811CT10	• ELBOW	1	
- 52	I189669	• CONTROL ASSY,DE-ICER VALVE.	1	
- 53	189302	• CLEVIS,ADJUSTABLE	1	
		/ATTACHING PARTS/		
- 54	AN3-6	• BOLT.	1	
	AN310-3	• NUT	1	
	AN380-2-2	• PIN,COTTER.	1	
		----*----		
- 55	189432	• TUBE ASSY,PRESSURE GAGE LINE OUTLET	1	
- 56	AAF811FT4	• NIPPLE.	1	
- 57	AN815-4D	• UNION	1	
- 58	I189678	• BRACKET,DE-ICER PIPING INBD LH.	1	
		/ATTACHING PARTS/		
- 59	AN3-22A	• BOLT.	1	
	AN3-13A	• BOLT.	1	
	AN365-1032	• NUT	2	
	AN960-10L	• WASHER.	4	
		----*----		
- 60	734-189681	• TUBE ASSY,DE-ICER PRESSURE.	1	
- 61	I189678	• BRACKET,DE-ICER PIPING INBD LH.	1	
		/ATTACHING PARTS/		
- 62	AN3-22A	• BOLT.	1	
	AN3-7	• BOLT.	2	
	AN3-13A	• BOLT.	1	
	AN310-3	• NUT	2	
	AN960-10L	• WASHER.	2	
	AN380-2-2	• PIN,COTTER.	2	
	AN365-1032	• NUT	2	
		-----*----		
- 63	734-189682	• TUBE ASSY,DE-ICER PRESSURE.	1	
- 64	AN815-4D	• UNION	1	
- 65	734-189685	• TUBE ASSY,DE-ICER PRESSURE OUTBD FWD.	1	
- 66	AN815-4D	• UNION	1	
- 67	AN833-4D	• ELBOW,90 DEGREE	1	
	AN924-4D	• NUT	1	
	AN960A716	• WASHER.	2	
- 68	694-189677	• TUBE ASSY,FUSELAGE DE-ICER PRESSURE	1	
- 69	AN815-4D	• UNION	1	
- 70	734-189684	• TUBE ASSY,DE-ICER PRESSURE GAGE	1	
- 71	AN5771T3A	• GAGE,DE-ICER PRESSURE	1	
		/ATTACHING PARTS/		
- 72	AN526-632R10	• SCREW	4	
		----*----		
	AN816-4D	• NIPPLE.	1	
- 73	189474	• TUBE ASSY,PRESSURE LINE	1	
- 74	189475	• TUBE ASSY,PRESS. LINE WING CENTER SECTION LH.	1	
- 75	189476	• TUBE ASSY,PRESS. LINE WING CENTER SECTION LH.	1	
- 76	189477	• TUBE ASSY,PRESS. LINE WING CENTER SECTION LH.	1	
- 77	AAF811HT-10D	• UNION	5	

FIG. & INDEX NO.	PART NO.	DESCRIPTION 1 2 3 4 5 6 7	UNITS PER ASSY	USABLE ON CODE
50 - 78	734-189686	SUPPORT,DE-ICER FUSELAGE PIPING LH	1	
		/ATTACHING PARTS/		
- 79	AN3-25A	BOLT	2	
	AN365-1032	NUT	2	
	AN960-10	WASHER	2	
		----*----		
- 80	189414	TUBE ASSY,PRESSURE LINE FUSELAGE	1	
- 81	189428	TUBE ASSY,PRESSURE LINE FUSELAGE CENTER	1	
- 82	AAF811HT-10D	UNION	2	
- 83	189429	TUBE ASSY,PRESSURE LINE FUSELAGE REAR	1	
- 84	AAF811HT-10D	UNION	1	
- 85	189431	TUBE ASSY,PRESSURE LINE FUSELAGE UPPER REAR	1	
- 86	AAF811JT-10D	TEE	1	
- 87	189415	TUBE ASSY,PRESSURE LINE STABILIZER & FIN LH	1	
- 88	189416	TUBE ASSY,PRESSURE LINE STABILIZER & FIN RH	1	
- 89	404-189572	TUBE ASSY,PRESSURE LINE FUSELAGE LH	1	
- 90	404-189575	TUBE ASSY,PRESSURE LINE FUSELAGE LH	1	
- 91	404-189574	TUBE ASSY,PRESSURE LINE FUSELAGE LH	1	
- 92	404-189573	TUBE ASSY,PRESSURE LINE FUSELAGE LH	1	
- 93	AAF811HT-10D	UNION	4	
- 94	644-189696	BLOCK ASSY,DE-ICER PIPING INBD LH	1	
		/ATTACHING PARTS/		
- 95	AN3-21A	BOLT	1	
	AN3-13A	BOLT	1	
	AN3-7	BOLT	2	
	AN310-3	NUT	2	
	AN380-2-2	PIN,COTTER	2	
	AN960-10L	WASHER	2	
	AN365-1032	NUT	2	
	I189668	CLAMP	2	
		----*----		
- 96	404-189576	TUBE ASSY,PRESSURE LINE FUSELAGE RH	1	
- 97	404-189579	TUBE ASSY,PRESSURE LINE FUSELAGE RH	1	
- 98	404-189578	TUBE ASSY,PRESSURE LINE FUSELAGE RH	1	
- 99	404-189577	TUBE ASSY,PRESSURE LINE FUSELAGE RH	1	
-100	AC811HT-10D	UNION	3	
-101	AC811ET-10D	ELBOW	1	
-102	84-189576	TUBE ASSY,PRESS. LINE WING CENTER SECTION RH	1	
-103	84-189577	TUBE ASSY,PRESS. LINE WING CENTER SECTION RH	1	
-104	84-189578	TUBE ASSY,PRESS. LINE WING CENTER SECTION RH	1	
-105	84-189579	TUBE ASSY,PRESS. LINE WING CENTER SECTION RH	1	
-106	AC811HT-10D	UNION	4	
-107	84-189594	TUBE ASSY,PRESSURE LINE NACELLE RH	1	
-108	84-189597	TUBE ASSY,VACUUM LINE NACELLE RH	1	
-109	84-189596	TUBE ASSY,PRESSURE LINE NACELLE RH	1	
-110	84-189595	TUBE ASSY,PRESSURE LINE NACELLE RH	1	
-111	AC811HT-10D	UNION	1	
-112	189424	TUBE ASSY,PRESSURE LINE NACELLE RH	1	
-113	189423	TUBE ASSY,PRESSURE LINE NACELLE RH	1	
-114	AC811CT-10D	ELBOW	1	
-115	84-189598	BLOCK	2	
		/ATTACHING PARTS/		
-116	AN3-12	BOLT	2	
	AN960-10	WASHER	4	
	AN365-1032	NUT	2	
		----*----		
	894-189670	BRACKET,CONTROL SUPPORT	1	A-2
		/ATTACHING PARTS/		
	AN515-8-8	SCREW	4	
	AN960-8	WASHER	4	
	AN365-832	NUT	4	
		----*----		

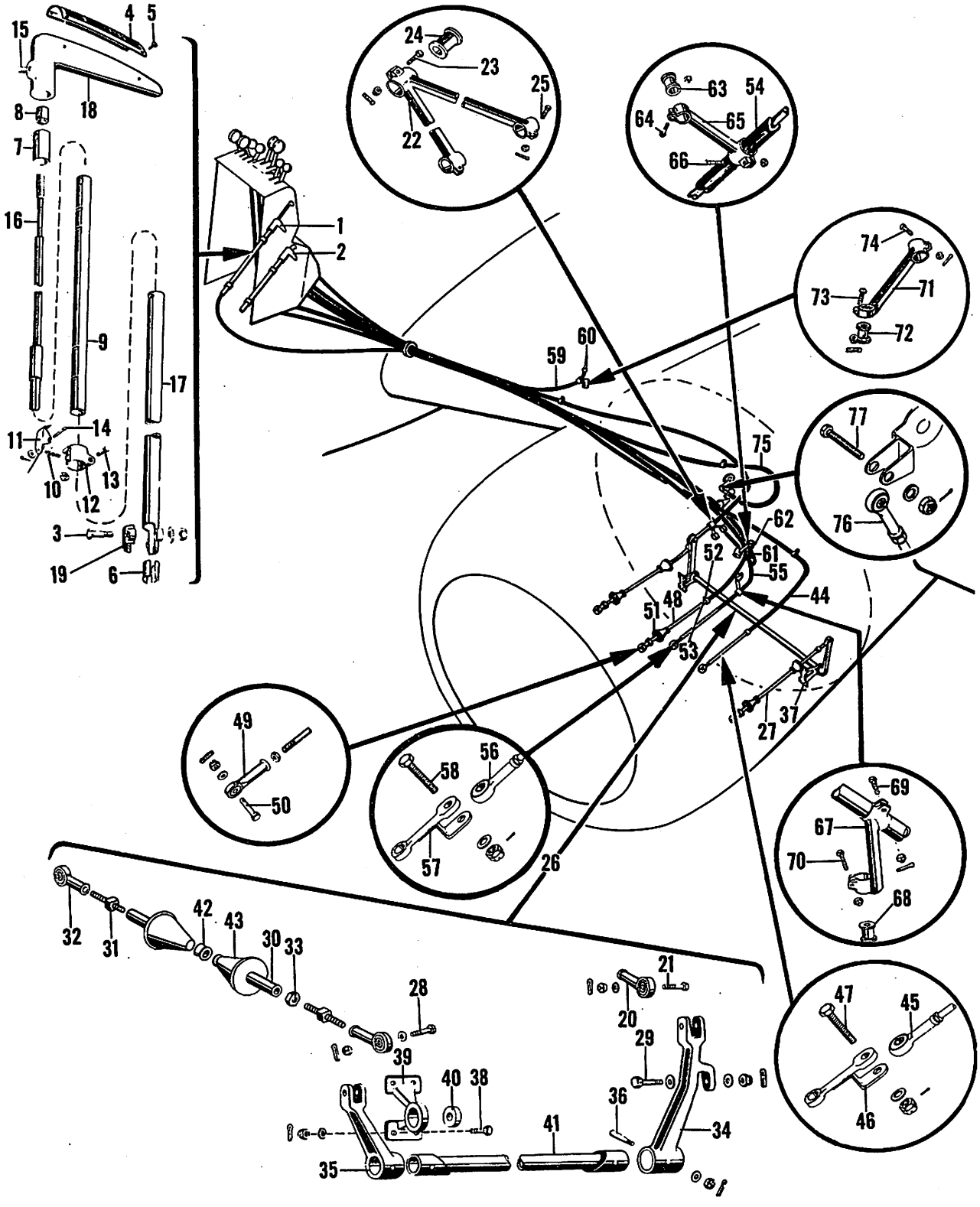

Figure 51. Engine Control Installation

FIG. & INDEX NO.	PART NO.	DESCRIPTION 1 2 3 4 5 6 7	UNITS PER ASSY	USABLE ON CODE
51	694-189060	CONTROLS INSTL,ENGINE /SEE FIG. 1 FOR NHA/	1	A-1,B
	694-189064	CONTROLS INSTL,ENGINE /SEE FIG. 1 FOR NHA/	1	A-2
- 1	189038-2	. CONTROL ASSY,COWL FLAPS LH	1	
- 2	189038-4	. CONTROL ASSY,COWL FLAPS RH	1	
		/ATTACHING PARTS/		
- 3	AN3-11	. BOLT	1	
	AN960-10	. WASHER	1	
	AN310-3	. NUT	1	
	AN380-2-2	. PIN,COTTER	1	
		----*----		
- 4	180061-1	. . PLACARD,COWL FLAP CONTROL	1	
	180061-2	. . PLACARD,COWL FLAP CONTROL	1	
		/ATTACHING PARTS/		
- 5	AN535-00-2	. . SCREW	4	
		----*----		
- 6	183072	. . SPACER,CONTROL ROD	1	
- 7	183076	. . COLLAR,COWL FLAP CONTROL	1	
- 8	183091	. . COLLAR,COWL FLAP CONTROL	1	
- 9	183078	. . PLUNGER,CONTROL ROD	1	
- 10	100943-040-003-024-8	. . SPRING	1	
- 11	183077	. . LATCH,CONTROL ROD	1	
- 12	183084	. . CLAMP,CONTROL ROD	1	
		/ATTACHING PARTS/		
- 13	AN3-7A	. . BOLT	1	
	AN960-4	. . WASHER	1	
	AN365-1032	. . NUT	1	
- 14	AN392-23	. . PIN	1	
	AN380-2-2	. . PIN,COTTER	1	
- 15	NO NUMBER	. . SCREW,1/4-20 X 3/8 SOCKET CUP POINT SET	1	
		----*----		
- 16	189095-11	. . CONTROL,COWL FLAPS	1	
- 17	105020	. . HOUSING ASSY,COWL FLAPS	1	
- 18	183092	. . HANDLE,COWLING FLAPS CONTROL	1	
- 19	105019	. . CLAMP ASSY,COWLING FLAPS	1	
- 20	REB3N	. ROD,END /21335/	2	
		/ATTACHING PARTS/		
- 21	AN3-11	. BOLT	1	
	AN960-10	. WASHER	1	
	AN310-3	. NUT	1	
	AN380-2-2	. PIN,COTTER	1	
		----*----		
- 22	404-189534	. BRACKET,COWL FLAP UNIT SUPPORT LH	1	
	404-189534-1	. BRACKET,COWL FLAP UNIT SUPPORT RH	1	
		/ATTACHING PARTS/		
- 23	AN3-7	. BOLT	1	
- 24	S-241	. BUSHING	1	
	AN310-3	. NUT	1	
- 25	AN4-11	. BOLT	2	
	AN310-4	. NUT	2	
	AN380-2-2	. PIN,COTTER	3	
		----*----		
- 26	189526AL	. CONTROL ASSY,COWL FLAP LH	1	
	189526AR	. CONTROL ASSY,COWL FLAP RH	1	
- 27	18S5967	. . ROD ASSY,COWL FLAP CONTROL	1	
		/ATTACHING PARTS/		
- 28	AN3-11	. . BOLT	3	
- 29	AN3-13	. . BOLT	1	
	AN960-10	. . WASHER	4	
	AN310-3	. . NUT	4	
	AN380-2-2	. . PIN,COTTER	4	
		----*----		
- 30	18S5968	. . . LINK,ROD END	1	
- 31	185969	. . . SCREW,ADJUSTING	2	
- 32	REB3N	. . . ROD,END /21335/	2	
- 33	AN315-4R	. . . NUT	1	

FIG. & INDEX NO.	PART NO.	DESCRIPTION 1 2 3 4 5 6 7	UNITS PER ASSY	USABLE ON CODE
51 - 34	189521	. . ARM,COWL FLAP	1	
- 35	189522	. . ARM,COWL FLAP	1	
		/ATTACHING PARTS/		
- 36	AN386-2-10	. . PIN,TAPER	2	
	AN975-3	. . WASHER.	2	
	AN320-3	. . NUT	2	
	AN380-2-2	. . PIN,COTTER.	2	
		----*----		
- 37	189523-3L	. . HANGAR,COWL FLAP TORQUE TUBE LH	2	
	189523-4R	. . HANGAR,COWL FLAP TORQUE TUBE RH	2	
		/ATTACHING PARTS/		
- 38	AN3-5A	. . BOLT.	4	
	AN960-10	. . WASHER.	4	
	AN365-1032	. . NUT	4	
		----*----		
- 39	189523-1	. . . CASTING	1	
- 40	A539	. . . BEARING,/21335/	1	
- 41	189525	. . TUBE,COWL FLAP TORQUE	1	
- 42	S-27	. LINER	8	
- 43	732909	. GROMMET,/91265/	8	
- 44	189095-4	. CONTROL,MIXTURE LH.	1	
	189095-3	. CONTROL,MIXTURE RH.	1	
- 45	REB3N	. END,ROD /21335/	2	
- 46	189185	. ARM,CONTROL	2	
		/ATTACHING PARTS/		
- 47	AN3-11	. BOLT.	1	
	AN960-10	. WASHER.	1	
	AN310-3	. NUT	1	
		----*----		
- 48	189095-5	. CONTROL,MANIFOLD LH	1	
	189095-6	. CONTROL,MANIFOLD RH	1	
- 49	REB3N	. END,ROD /21335/	2	
		/ATTACHING PARTS/		
- 50	AN3-12	. BOLT.	1	
	AN960-10	. WASHER.	1	
	AN365-1032	. NUT	1	
	AN380-2-2	. PIN,COTTER.	1	
		----*----		
- 51	732090	. GROMMET,RUDDER /91265/.	2	
- 52	AN3-7A	. BOLT.	2	
- 53	S-241	. BUSHING	2	
	AN365-1032	. NUT	2	
- 54	106043S-08-04-180	. TUBING.	2	
	106043S-08-04-020	. TUBING.	12	
- 55	189095-7	. CONTROL,THROTTLE LH	1	
	189095-8	. CONTROL,THROTTLE RH	1	
- 56	REB3N	. END,ROD /21335/	2	
- 57	18S9185	. ARM,CARBURETOR EXTENSION.	2	
		/ATTACHING PARTS/		
- 58	AN3-11	. BOLT.	1	
	AN960-10	. WASHER.	1	
	AN310-3	. NUT	1	
	AN380-2-2	. PIN,COTTER.	2	
		----*----		
- 59	189095-9	. CONTROL,OIL SHUTTER LH.	1	
	189095-10	. CONTROL,OIL SHUTTER RH.	1	
- 60	316	. BELLCRANK,/95764/	2	
	AN365-1032	. NUT	2	
- 61	404-183958-6	. CONTROL,OIL BYPASS.	2	
		/ATTACHING PARTS/		
- 62	S-207-6	. BOLT.	1	
	AN960-416	. WASHER.	1	
	AN310-4	. NUT	1	
	AN315-4R	. NUT	1	
	AN380-2-2	. PIN,COTTER.	1	
		----*----		

FIG. & INDEX NO.	PART NO.	DESCRIPTION 1 2 3 4 5 6 7	UNITS PER ASSY	USABLE ON CODE
51 - 63	404-189064	. BUSHING,CONTROL ROD END	2	
		/ATTACHING PARTS/		
- 64	AN3-7A	. BOLT.	1	
	AN960-10	. WASHER.	1	
	AN365-1032	. NUT	1	
		----*----		
- 65	404-189059	. BRACKET ASSY,OIL BYPASS CONTROL LH.	1	
	404-189059-1	. BRACKET ASSY,OIL BYPASS CONTROL RH.	1	
		/ATTACHING PARTS/		
- 66	AN4-10	. BOLT.	1	
	AN310-4	. NUT	1	
	AN365-624	. NUT	1	
	AN380-2-2	. PIN,COTTER.	1	
		----*----		
- 67	18S936P	. BRACKET,MIXTURE CONTROL SUPPORT	2	
		/ATTACHING PARTS/		
- 68	S-241	. BUSHING	1	
- 69	AN3-7A	. BOLT.	1	
- 70	AN4-10	. BOLT.	1	
	AN365-1032	. NUT	1	
	AN310-4	. NUT	1	
	AN380-2-2	. PIN,COTTER.	2	
		----*----		
- 71	189073	. BRACKET,SUPPORT LH.	1	
	189878	. BRACKET,SUPPORT RH.	1	
		/ATTACHING PARTS/		
- 72	S-241	. BUSHING	1	
- 73	AN3-7A	. BOLT.	1	
- 74	AN4-11A	. BOLT.	1	
	AN365-1032	. NUT	1	
	AN365-428	. NUT	1	
		----*----		
- 75	189095-2	. CONTROL,PROPELLER LH.	1	A-2
	189095-1	. CONTROL,PROPELLER RH.	1	A-2
- 76	REB3N	. END,ROD /21335/	2	A-2
		/ATTACHING PARTS/		
- 77	AN3-11	. BOLT.	1	
	AN960-10	. WASHER.	1	
	AN310-3	. NUT	1	
	AN380-2-2	. PIN,COTTER.	1	
		----*----		

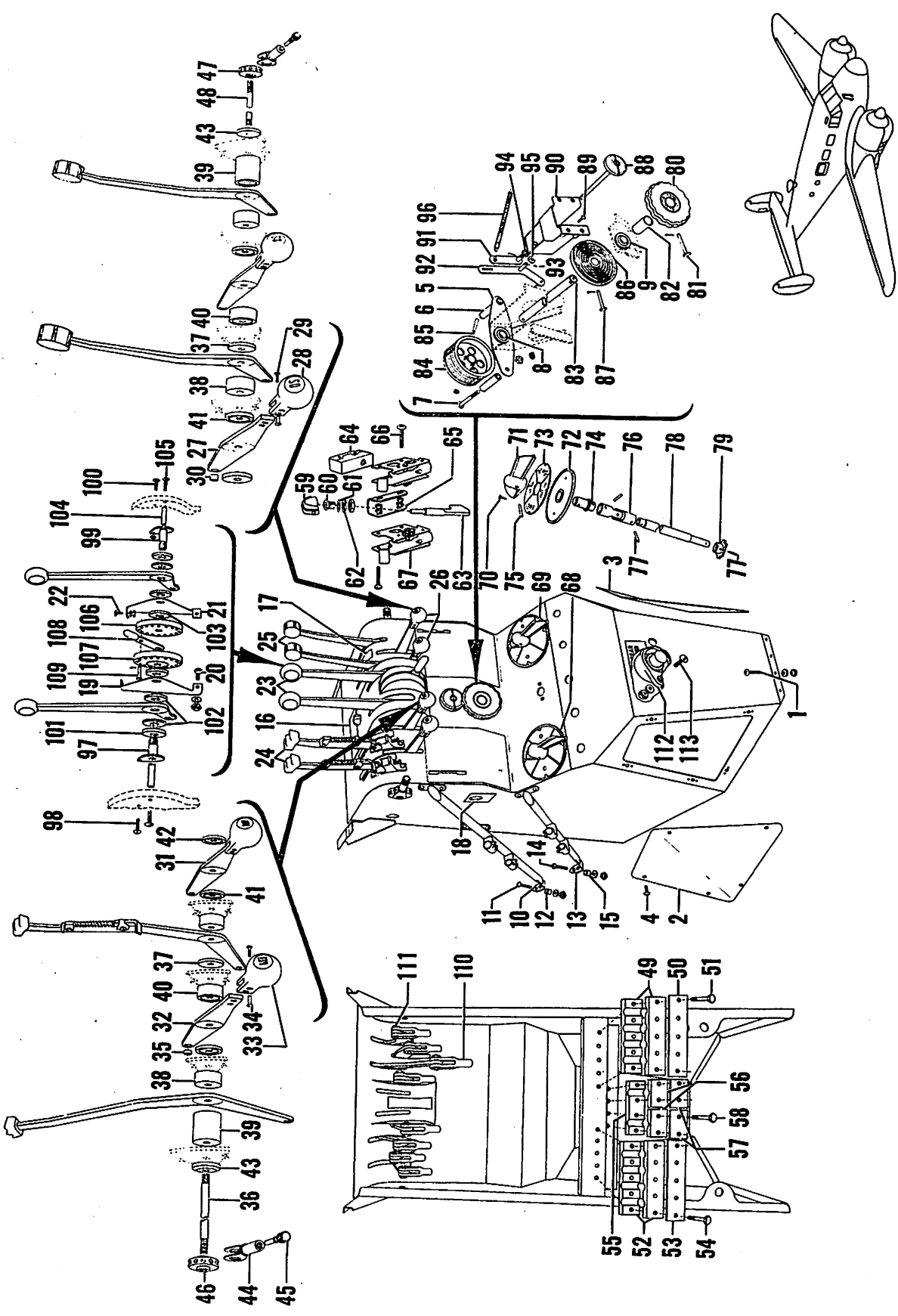

Figure 52. Pedestal Control Installation

FIG. & INDEX NO.	PART NO.	DESCRIPTION 1 2 3 4 5 6 7	UNITS PER ASSY	USABLE ON CODE
52	694-189050	CONTROLS INSTL,PEDESTAL /SEE FIG. 1 FOR NHA/	1	A-1,B
	694-183860	. PEDESTAL ASSY,CONTROL	1	A-1,B
		/ATTACHING PARTS/		
- 1	AN526-832R16	. SCREW	22	
	AN960-8	. WASHER	22	
	AN365-832	. NUT	22	
		----*----		
	694-183852	. . BOX ASSY,PEDESTAL	1	A-1,B
- 2	694-183852-18	. . . DOOR,LOWER LH	1	
- 3	694-183852-19	. . . DOOR,LOWER RH	1	
		/ATTACHING PARTS/		
- 4	AN526-832R7	. . . SCREW	5	
		----*----		
	407-183853	. . SUPPORT ASSY,AILERON TAB PEDESTAL PULLEY	1	
- 5	407-183854	. . . SUPPORT,AILERON TAB PULLEY	1	
- 6	100696-D10-07-116	. . . BUSHING,AILERON TAB CONTROL PULLEY GUARD	2	
- 7	AN520-10-30	. . . SCREW	2	
	AN365-1032	. . . NUT	2	
- 8	CS866	. . . BEARING,/53268/	1	
	183854	. . BRACKET,BEARING AILERON TAB CONTROL SHAFT	1	
- 9	CS866	. . . BEARING,/53268/	1	
- 10	183080	. . BRACKET,COWL FLAP CONTROL MOUNTING UPPER	1	A-1,B
		/ATTACHING PARTS/		
- 11	AN526-832R16	. . SCREW	2	
- 12	100696-008-06-018	. . SPACER	2	
	AN960-8	. . WASHER	2	
	AN365-832	. . NUT	2	
		----*----		
- 13	183081	. . BRACKET,COWL FLAP CONTROL MOUNTING LOWER	1	
		/ATTACHING PARTS/		
- 14	AN526-832R16	. . SCREW	2	
- 15	100696-008-06-018	. . SPACER	2	
	AN960-8	. . WASHER	2	
	AN365-832	. . NUT	2	
		----*----		
- 16	804-180059	. . PLACARD,WARNING HORN SILENCER	1	
- 17	180100	. . PLACARD,IDLE CUTOFF	1	
- 18	734-180063	. . PLACARD,LANDING GEAR SWITCH	1	A-1,B
- 19	183883	. . PLATE,THROTTLE LEVER CENTRAL GUIDE LH	1	
		/ATTACHING PARTS/		
- 20	AN526-632R6	. . SCREW	2	
	AN960-6	. . WASHER	2	
	AN365-632	. . NUT	2	
		----*----		
- 21	183883-1	. . PLATE,THROTTLE LEVER CENTRAL GUIDE RH	1	
		/ATTACHING PARTS/		
- 22	AN526-632R6	. . SCREW	2	
	AN960-6	. . WASHER	2	
	AN365-632	. . NUT	2	
		----*----		
- 23	694-189061-8	. LEVER ASSY,THROTTLE	2	
- 24	644-189056-8	. LEVER ASSY,PROPELLER SPEED CONTROL	2	
- 25	694-189063-6	. LEVER ASSY,MIXTURE CONTROL	2	
- 26	694-189065	. LEVER ASSY,OIL SHUTTER CONTROL	2	
- 27	189077	. . LEVER	1	
- 28	201717-7	. . KNOB	1	
		/ATTACHING PARTS/		
- 29	AN526-632-7	. . SCREW	2	
	6-45	. . RIVNUT,/25472/	2	
		----*----		
- 30	101321-00-0193-0172	. . BUSHING	1	

FIG. & INDEX NO.	PART NO.	DESCRIPTION 1 2 3 4 5 6 7	UNITS PER ASSY	USABLE ON CODE
52 - 31	694-189066	. LEVER ASSY,MANIFOLD HEAT CONTROL.	2	
- 32	189077	. . LEVER	1	
- 33	201717-6	. . KNOB.	1	
		/ATTACHING PARTS/		
- 34	AN526-632-7	. . SCREW	2	
	6-45	. . RIVNUT,/25472/.	2	
		----*----		
- 35	101321-00-0193-0172	. . BUSHING	1	
- 36	694-189082	. SHAFT,PEDESTAL OUTER LEVER.	1	
- 37	183868-1	. BUSHING,CONTROL PEDESTAL CONTROL SHAFT. . . .	2	
- 38	183868-2	. BUSHING,CONTROL PEDESTAL CONTROL SHAFT. . . .	4	
- 39	183847P	. BUSHING,CONTROL PEDESTAL CONTROL SHAFT. . . .	2	
- 40	189085	. SPACER,SPACER CONTROL LEVER FRICTION.	2	
- 41	189087	. SPACER,SPACER CONTROL LEVER FRICTION.	4	
- 42	189088	. SPACER,SPACER CONTROL LEVER FRICTION.	2	
- 43	183852-2	. SPACER,FRICTION ADJUSTMENT.	2	
- 44	183852-1	. CLEVIS ASSY,FRICTION ADJUSTMENT	2	
- 45	183852-3	. PIN,FRICTION ADJUSTMENT	2	
- 46	694-183857	. WHEEL,FRICTION ADJUSTMENT LH.	1	
- 47	183852-4	. WHEEL,FRICTION ADJUSTMENT RH.	1	
- 48	189082	. SHAFT,PEDESTAL OUTER LEVER.	1	
- 49	189046	. BLOCK,ENGINE CONTROL SUPPORT.	2	
- 50	189074	. REINFORCEMENT,UPPER CONTROL	1	
		/ATTACHING PARTS/		
- 51	AN3-10A	. BOLT.	5	
		----*----		
	183857-1	. BLOCK ASSY,CONTROL PANEL CONTROL GUIDE. . . .	1	
- 52	183857-3	. . BLOCK,CONTROL PANEL CONTROL GUIDE	2	
- 53	189074	. REINFORCEMENT,UPPER CONTROL	1	
		/ATTACHING PARTS/		
- 54	AN3-10A	. BOLT.	5	
		----*----		
	183857-2	. BLOCK ASSY,CONTROL PANEL CONTROL GUIDE. . . .	1	
- 55	183857-4	. . BLOCK,CONTROL PANEL CONTROL GUIDE	1	
- 56	183857-5	. . BLOCK,CONTROL PANEL CONTROL GUIDE	2	
- 57	189089	. REINFORCEMENT,MIDDLE CONTROL BLOCK.	2	
		/ATTACHING PARTS/		
- 58	AN3-10A	. BOLT.	2	
		----*----		
- 59	1274	. KNOB,WARNING HORN SILENCER /77636/.	1	
- 60	UB241	. BEARING,PANEL /77636/	1	
- 61	AN960-416	. WASHER.	1	
- 62	AN960-616	. WASHER.	1	
- 63	183887	. ACTUATOR ASSY,WARNING HORN.	1	
- 64	DT-2R-A7	. SWITCH,MICRO /40228/.	2	
- 65	183888	. BRACE,MICRO SWITCH.	1	
		/ATTACHING PARTS/		
- 66	AN526-632R18	. SCREW	4	
	AN960-6	. WASHER.	4	
	AN365-632	. NUT	4	
		----*----		
- 67	9-11691	. ACTUATOR,MICRO SWITCH /TYPE T/ /40228/. . . .	2	
- 68	694-189260-6	. CONTROL ASSY,FUEL SELECTOR VALVE LH	1	
- 69	694-189260-8	. CONTROL ASSY,FUEL SELECTOR VALVE RH	1	
		/ATTACHING PARTS/		
- 70	AN505-6-8	. SCREW	2	
	AN960-6	. WASHER.	2	
	AN365-632	. NUT	2	
		----*----		
- 71	694-189260-4	. . HANDLE,FUEL SELECTOR VALVE.	1	
- 72	942105	. . PLATE ASSY,SELECTOR VALVE POSITION /70138/.	1	
- 73	694-180074	. . PLACARD,FUEL VALVE POSITION LH.	1	
	694-180075	. . PLACARD,FUEL VALVE POSITION RH.	1	

FIG. & INDEX NO.	PART NO.	DESCRIPTION 1 2 3 4 5 6 7	UNITS PER ASSY	USABLE ON CODE
52 - 74	066653	. . SHAFT,FUEL SELECTOR VALVE CONTROL HANDLE. . /ATTACHING PARTS/	1	
- 75	102809-A-128-018	. . PIN	1	
		----*----		
- 76	AN270B8	. . UNIVERSAL,FUEL SELECTOR VALVE CONTROL SHAFT /ATTACHING PARTS/	1	
- 77	105714-S-1-6	. . PIN	3	
		----*----		
- 78	694-189260-2	. . TUBE,FUEL TANK SELECTOR VALVE CONTROL . . .	1	
- 79	189714	. . DRIVER,FUEL TANK SELECTOR VALVE	1	
- 80	181318	. WHEEL ASSY,AILERON TAB HAND . . . . . /ATTACHING PARTS/	1	
- 81	AN392-27	. PIN	1	
	AN380-2-1	. PIN,COTTER.	1	
		----*----		
- 82	105739-X0391-0500-0937	. BUSHING,AILERON TAB CONTROL HAND WHEEL. . . .	1	
- 83	404-187668	. SHAFT,AILERON TAB CONTROL HAND WHEEL.	1	
- 84	404-187717	. SHEAVE,AILERON TAB CONTROL. . . . . /ATTACHING PARTS/	1	
- 85	187714-3	. PIN	1	
	AN365-632	. NUT	1	
		----*----		
	404-187750	. INDICATOR INSTL,AILERON TAB	1	
- 86	404-187726	. . ACTUATOR,AILERON TAB INDICATOR. . . . . /ATTACHING PARTS/	1	
- 87	AN392-31	. . PIN	1	
	AN380-2-1	. . PIN,COTTER.	1	
		----*----		
- 88	404-187732-12	. . DIAL ASSY,AILERON TAB INDICATOR	1	
	404-187729	. . INDICATOR ASSY,AILERON TAB. . . . . /ATTACHING PARTS/	1	
- 89	AN507-632-6	. . SCREW	4	
	AN365-632	. . NUT	4	
		----*----		
- 90	694-187734	. . . BRACKET ASSY,AILERON TAB INDICATOR ASSY .	1	
- 91	404-187731-4	. . . LINK ASSY,AILERON TAB INDICATOR ASSY. . .	1	
- 92	404-187735	. . . LINK ASSY,AILERON TAB INDICATOR ASSY. . . /ATTACHING PARTS/	1	
- 93	404-187729-2	. . . PIN	1	
		----*----		
- 94	AN960-10L	. . . WASHER.	2	
- 95	AN960-4	. . . WASHER.	2	
- 96	100942-010-006-316-84	. . SPRING,AILERON TAB INDICATOR.	1	
	189490	. CONTROL ASSY,FRICTION CONTROL THROTTLE. . . .	1	
- 97	189493-2	. . SCREW,FRICTION CONTROL THROTTLE SPACER RH . /ATTACHING PARTS/	1	
- 98	AN526-632-6	. . SCREW	1	
	AN365-632	. . NUT	1	
		----*----		
- 99	189493-1	. . SCREW,FRICTION CONTROL THROTTLE SPACER LH . /ATTACHING PARTS/	1	
-100	AN526-632-6	. . SCREW	1	
	AN365-632	. . NUT	1	
		----*----		
-101	189496	. . WASHER,FRICTION CONTROL THROTTLE.	2	
-102	189494	. . WASHER,FRICTION CONTROL THROTTLE.	4	
-103	189495	. . WASHER,FRICTION CONTROL THROTTLE.	2	
-104	189083	. . SHAFT,PEDESTAL INNER LEVER. . . . . /ATTACHING PARTS/	2	
-105	NO NUMBER	. . SCREW,8/32 X 3/4 BRAZIER HEAD MACHINE . . .	1	
		----*----		

FIG. & INDEX NO.	PART NO.	DESCRIPTION 1 2 3 4 5 6 7	UNITS PER ASSY	USABLE ON CODE
52 -106	189491-2	. . WHEEL,FRICTION CONTROL THROTTLE LH.	1	
-107	189491-1	. . WHEEL,FRICTION CONTROL THROTTLE RH.	1	
-108	189492	. . LEVER,FRICTION CONTROL THROTTLE	1	
		/ATTACHING PARTS/		
-109	AN392-21	. . PIN,CLEVIS.	1	
	AN380-2-2	. . PIN,COTTER.	1	
		----*----		
-110	S-197	. CLEVIS,CONTROL LINKAGE CONTROL.	8	
		/ATTACHING PARTS/		
-111	189063	. BOLT,CONTROL CLEVIS	1	
		----*----		
-112	PLM50	. BREAKER,CIRCUIT /78043/	1	
		/ATTACHING PARTS/		
-113	AN526-1032R12	. SCREW	2	
	AN960-10L	. WASHER.	2	
	AN365-1032	. NUT	2	
		----*----		

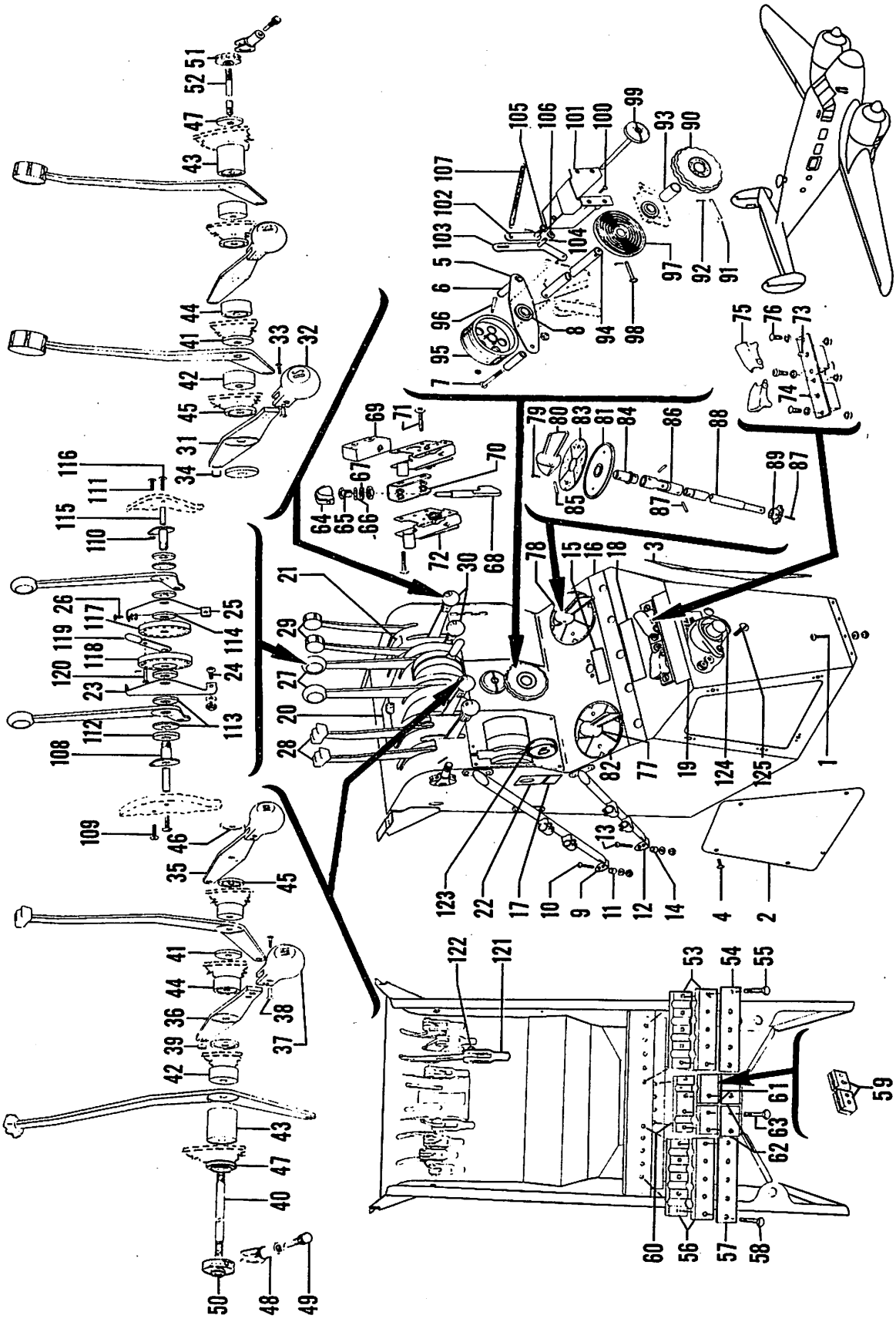

Figure 53. Pedestal Control Installation

FIG. & INDEX NO.	PART NO.	DESCRIPTION 1 2 3 4 5 6 7	UNITS PER ASSY	USABLE ON CODE
53	694-189055	CONTROLS INSTL,PEDESTAL /SEE FIG. 1 FOR NHA/. .	1	A-2
	694-183861	. PEDESTAL ASSY,CONTROL	1	A-2
		/ATTACHING PARTS/		
- 1	AN526-832R16	. SCREW	22	
	AN960-8	. WASHER.	22	
	AN365-832	. NUT	22	
		----*----		
	694-183852-24	. . BOX ASSY,PEDESTAL	1	A-2
- 2	694-183852-18	. . . DOOR,LOWER LH	1	
- 3	694-183852-19	. . . DOOR,LOWER RH	1	
		/ATTACHING PARTS/		
- 4	AN526-832R7	. . . SCREW	5	
		----*----		
	407-183853	. . SUPPORT ASSY,AILERON TAB PEDESTAL PULLEY. .	1	
- 5	407-183854	. . . SUPPORT,AILERON TAB PULLEY.	1	
- 6	100696-D10-07-116	. . . BUSHING,AILERON TAB CONTROL PULLEY GUARD.	2	
- 7	AN520-10-30	. . . SCREW	2	
	AN365-1032	. . . NUT	2	
- 8	CS866	. . . BEARING,/53268/	2	
	183854	. . BRACKET,AILERON TAB CONTROL SHAFT BEARING .	1	
- 9	894-183844	. . BRACKET ASSY,UPPER COWL FLAP MOUNTING . . .	1	A-2
		/ATTACHING PARTS/		
- 10	AN526-832R16	. . SCREW	2	
- 11	100696-008-06-018	. . SPACER.	2	
	AN960-8	. . WASHER.	2	
	AN365-832	. . NUT	2	
		----*----		
- 12	183081	. . BRACKET,LOWER COWL FLAP CONTROL MOUNTING. .	1	
		/ATTACHING PARTS/		
- 13	AN526-832R16	. . SCREW	2	
- 14	100696-008-06-018	. . SPACER.	2	
	AN960-8	. . WASHER.	2	
	AN365-832	. . NUT	2	
		----*----		
- 15	404-180120	. . PLACARD,TAIL WHEEL LOCK CONTROL	1	A-2
- 16	694-180019	. . PLACARD,PEDESTAL CONTROLS	1	A-2
- 17	894-180100	. . PLACARD,LG SWITCH MOUNTING SCREW WARNING. .	1	A-2
- 18	694-180103	. . PLACARD,FIRE EXTINGUISHER	1	A-2
- 19	994-180082	. . PLACARD,FIRE EXT. ENGINE SELECTOR SWITCH. .	1	A-2
- 20	804-180059	. . PLACARD,WARNING HORN SILENCER	1	
- 21	180100	. . PLACARD,IDLER CUTOFF.	1	
- 22	894-180086	. . PLACARD,LANDING GEAR SWITCH	1	A-2
- 23	183883	. . PLATE,THROTTLE LEVER CENTRAL GUIDE LH . . .	1	
		/ATTACHING PARTS/		
- 24	AN526-632R6	. . SCREW	2	
	AN960-6	. . WASHER.	2	
	AN365-632	. . NUT	2	
		----*----		
- 25	183883-1	. . PLATE,THROTTLE LEVER CENTRAL GUIDE RH . . .	1	
		/ATTACHING PARTS/		
- 26	AN526-632R6	. . SCREW	2	
	AN960-6	. . WASHER.	2	
	AN365-632	. . NUT	2	
		----*----		
- 27	694-189061-8	. LEVER ASSY,THROTTLE	2	
- 28	644-189056-8	. LEVER ASSY,PROPELLER CONTROL.	2	
- 29	694-189063-6	. LEVER ASSY,MIXTURE CONTROL.	2	
- 30	694-189065	. LEVER ASSY,OIL SHUTTER CONTROL.	2	
- 31	189077	. . LEVER	1	
- 32	201717-7	. . KNOB.	1	
		/ATTACHING PARTS/		
- 33	AN526-632-7	. . SCREW	2	
	6-45	. . RIVNUT,/25472/.	2	
		----*----		

FIG. & INDEX NO.	PART NO.	DESCRIPTION 1 2 3 4 5 6 7	UNITS PER ASSY	USABLE ON CODE
53 - 34	101321-00-0193-0172	. . BUSHING	1	
- 35	694-189066	. LEVER ASSY,MANIFOLD HEAT CONTROL.	2	
- 36	189077	. . LEVER	1	
- 37	201717-6	. . KNOB. /ATTACHING PARTS/	1	
- 38	AN526-632-7	. . SCREW	2	
	6-45	. . RIVNUT,/25472/.	2	
		----*----		
- 39	101321-00-0193-0172	. . BUSHING	1	
- 40	694-189082	. SHAFT,PEDESTAL OUTER LEVER.	1	
- 41	183868-1	. BUSHING,CONTROL PEDESTAL CONTROL SHAFT.	2	
- 42	183868-2	. BUSHING,CONTROL PEDESTAL CONTROL SHAFT.	4	
- 43	183847P	. BUSHING,CONTROL PEDESTAL CONTROL SHAFT.	2	
- 44	189085	. SPACER,CONTROL LEVER FRICTION	2	
- 45	189087	. SPACER,CONTROL LEVER FRICTION	4	
- 46	189088	. SPACER,CONTROL LEVER FRICTION	2	
- 47	183852-2	. SPACER,FRICTION ADJUSTMENT.	2	
- 48	183852-1	. CLEVIS ASSY,FRICTION ADJUSTMENT	2	
- 49	183852-3	. PIN,FRICTION ADJUSTMENT	2	
- 50	694-183857	. WHEEL,FRICTION ADJUSTMENT LH.	1	
- 51	183852-4	. WHEEL,FRICTION ADJUSTMENT RH.	1	
- 52	189082	. SHAFT,PEDESTAL OUTER LEVER.	1	
- 53	189046	. BLOCK,ENGINE CONTROL SUPPORT.	2	
- 54	189074	. REINFORCEMENT,UPPER CONTROL /ATTACHING PARTS/	1	
- 55	AN3-10A	. BOLT.	5	
		----*----		
	183857-1	. BLOCK ASSY,CONTROL PANEL CONTROL GUIDE.	1	
- 56	183857-3	. . BLOCK,CONTROL PANEL CONTROL GUIDE	2	
- 57	189074	. REINFORCEMENT,UPPER CONTROL /ATTACHING PARTS/	1	
- 58	AN3-10A	. BOLT.	5	
		----*----		
- 59	183857-2	. BLOCK ASSY,CONTROL PANEL CONTROL GUIDE.	1	
- 60	183857-4	. . BLOCK,CONTROL PANEL CONTROL GUIDE	1	
- 61	183857-5	. . BLOCK,CONTROL PANEL CONTROL GUIDE	2	
- 62	189089	. REINFORCEMENT,MIDDLE CONTROL BLOCK. /ATTACHING PARTS/	2	
- 63	AN3-10A	. BOLT.	2	
		----*----		
- 64	1274	. KNOB,WARNING HORN SILENCER /74887/.	1	
- 65	UB241	. BEARING,PANEL /37942/	1	
- 66	AN960-416	. WASHER.	1	
- 67	AN960-616	. WASHER.	1	
- 68	183887	. ACTUATOR ASSY,WARNING HORN.	1	
- 69	DT-2R-A7	. SWITCH,MICRO /40228/.	2	
- 70	183888	. BRACE,MICRO SWITCH. /ATTACHING PARTS/	1	
- 71	AN526-632R18	. SCREW	4	
	AN960-6	. WASHER.	4	
	AN365-632	. NUT	4	
		----*----		
- 72	9-11691	. ACTUATOR,MICRO SWITCH /TYPE T/ /40228/.	2	
- 73	AN3022-8	. SWITCH,TOGGLE /GFAE/.	1	A-2
- 74	AN3023-8	. SWITCH,TOGGLE /GFAE/.	1	A-2
- 75	AN3028-3	. GUARD,TOGGLE SWITCH /GFAE/. /ATTACHING PARTS/	2	A-2
- 76	AN500A6-6	. SCREW	1	
	AN526-632R6	. SCREW	1	
	AN960-6	. WASHER.	4	
		----*----		

FIG. & INDEX NO.	PART NO.	DESCRIPTION 1 2 3 4 5 6 7	UNITS PER ASSY	USABLE ON CODE
53 - 77	694-189260-6	. CONTROL ASSY,FUEL SELECTOR VALVE LH	1	
- 78	694-189260-8	. CONTROL ASSY,FUEL SELECTOR VALVE RH	1	
		/ATTACHING PARTS/		
- 79	AN505R6-8	. SCREW	2	
	AN960-6	. WASHER.	2	
	AN365-632	. NUT	2	
		----*----		
- 80	694-189260-4	. . HANDLE,FUEL SELECTOR VALVE.	1	
- 81	942105	. . PLATE ASSY,FUEL SELECTOR VALVE POSITION . .	1	
		/70138/		
- 82	694-180074	. . PLACARD,FUEL VALVE POSITION LH.	1	
- 83	694-180075	. . PLACARD,FUEL VALVE POSITION RH.	1	
- 84	066653	. . SHAFT,FUEL SELECTOR VALVE CONTROL HANDLE. .	1	
		/ATTACHING PARTS/		
- 85	102809-A-128-018	. . PIN	1	
		----*----		
- 86	AN270B8	. . UNIVERSAL,FUEL SELECTOR VALVE CONTROL SHAFT	1	
		/ATTACHING PARTS/		
- 87	105714-S-1-6	. . PIN	3	
		----*----		
- 88	694-189260-2	. . TUBE,FUEL TANK SELECTOR VALVE CONTROL . . .	1	
- 89	189714	. . DRIVER,FUEL TANK SELECTOR VALVE	1	
- 90	181318	. WHEEL ASSY,AILERON TAB HAND	1	
		/ATTACHING PARTS/		
- 91	AN392-27	. PIN	1	
- 92	AN380-2-1	. PIN,COTTER.	1	
		----*----		
- 93	105739-X0391-0500-0937	. BUSHING,AILERON TAB CONTROL HAND WHEEL. . . .	1	
- 94	404-187668	. SHAFT,AILERON TAB CONTROL HAND WHEEL.	1	
- 95	404-187717	. SHEAVE,AILERON TAB CONTROL.	1	
		/ATTACHING PARTS/		
- 96	187714-3	. PIN	1	
	AN365-632	. NUT	1	
		----*----		
	404-187750	. INDICATOR INSTL,AILERON TAB	1	
- 97	404-187726	. . ACTUATOR,AILERON TAB INDICATOR.	1	
		/ATTACHING PARTS/		
- 98	AN392-31	. . PIN	1	
	AN380-2-1	. . PIN,COTTER.	1	
		----*----		
- 99	404-187732-12	. . DIAL ASSY,AILERON TAB INDICATOR	1	
	404-187729	. . INDICATOR ASSY,AILERON TAB INDICATOR. . . .	1	
		/ATTACHING PARTS/		
-100	AN507-632-6	. . SCREW	4	
	AN365-632	. . NUT	4	
		----*----		
-101	694-187734	. . . BRACKET ASSY,AILERON TAB INDICATOR ASSY .	1	
-102	404-187731-4	. . . LINK ASSY,AILERON TAB INDICATOR ASSY. . .	1	
-103	404-187735	. . . LINK ASSY,AILERON TAB INDICATOR ASSY. . .	1	
		/ATTACHING PARTS/		
-104	404-187729-2	. . . PIN	1	
		----*----		
-105	AN960-10L	. . . WASHER.	2	
-106	AN960-4	. . . WASHER.	2	
-107	100942-010-006-316-84	. . SPRING,AILERON TAB INDICATOR.	1	
	189490	. CONTROL ASSY,FRICTION CONTROL THROTTLE. . . .	1	
-108	189493-2	. . SCREW,FRICTION CONTROL THROTTLE SPACER RH .	1	
		/ATTACHING PARTS/		
-109	AN526-632-6	. . SCREW	1	
	AN365-632	. . NUT	1	
		----*----		

FIG. & INDEX NO.	PART NO.	DESCRIPTION 1 2 3 4 5 6 7	UNITS PER ASSY	USABLE ON CODE
53 -110	189493-1	. . SCREW,FRICTION CONTROL THROTTLE SPACER LH . /ATTACHING PARTS/	1	
-111	AN526-632-6	. . SCREW	1	
	AN365-632	. . NUT	1	
		-----*-----		
-112	189496	. . WASHER,FRICTION CONTROL THROTTLE.	2	
-113	189494	. . WASHER,FRICTION CONTROL THROTTLE.	4	
-114	189495	. . WASHER,FRICTION CONTROL THROTTLE.	2	
-115	189083	. . SHAFT,PEDESTAL INNER LEVER. . . . . /ATTACHING PARTS/	2	
-116	NO NUMBER	. . SCREW,8/32 X 3/4 BRAZIER HEAD MACHINE . . .	2	
		-----*-----		
-117	189491-2	. . WHEEL,FRICTION CONTROL THROTTLE LH. . . .	1	
-118	189491-1	. . WHEEL,FRICTION CONTROL THROTTLE RH. . . .	1	
-119	189492	. . LEVER,FRICTION CONTROL THROTTLE . . . . . /ATTACHING PARTS/	1	
-120	AN392-21	. . PIN,CLEVIS.	1	
	AN380-2-2	. . PIN,COTTER.	1	
		-----*-----		
-121	S-197	. CLEVIS,CONTROL LINKAGE. . . . . /ATTACHING PARTS/	10	
-122	189063	. BOLT,CONTROL CLEVIS	1	
		-----*-----		
-123	694-180922	. SWITCH,LANDING GEAR /SEE FIG. 54/	1	
-124	PLM50	. BREAKER,CIRCUIT /78043/ . . . . . /ATTACHING PARTS/	1	
-125	AN526-1032R12	. SCREW	2	
	AN960-10L	. WASHER.	2	
	AN365-1032	. NUT	2	
		-----*-----		

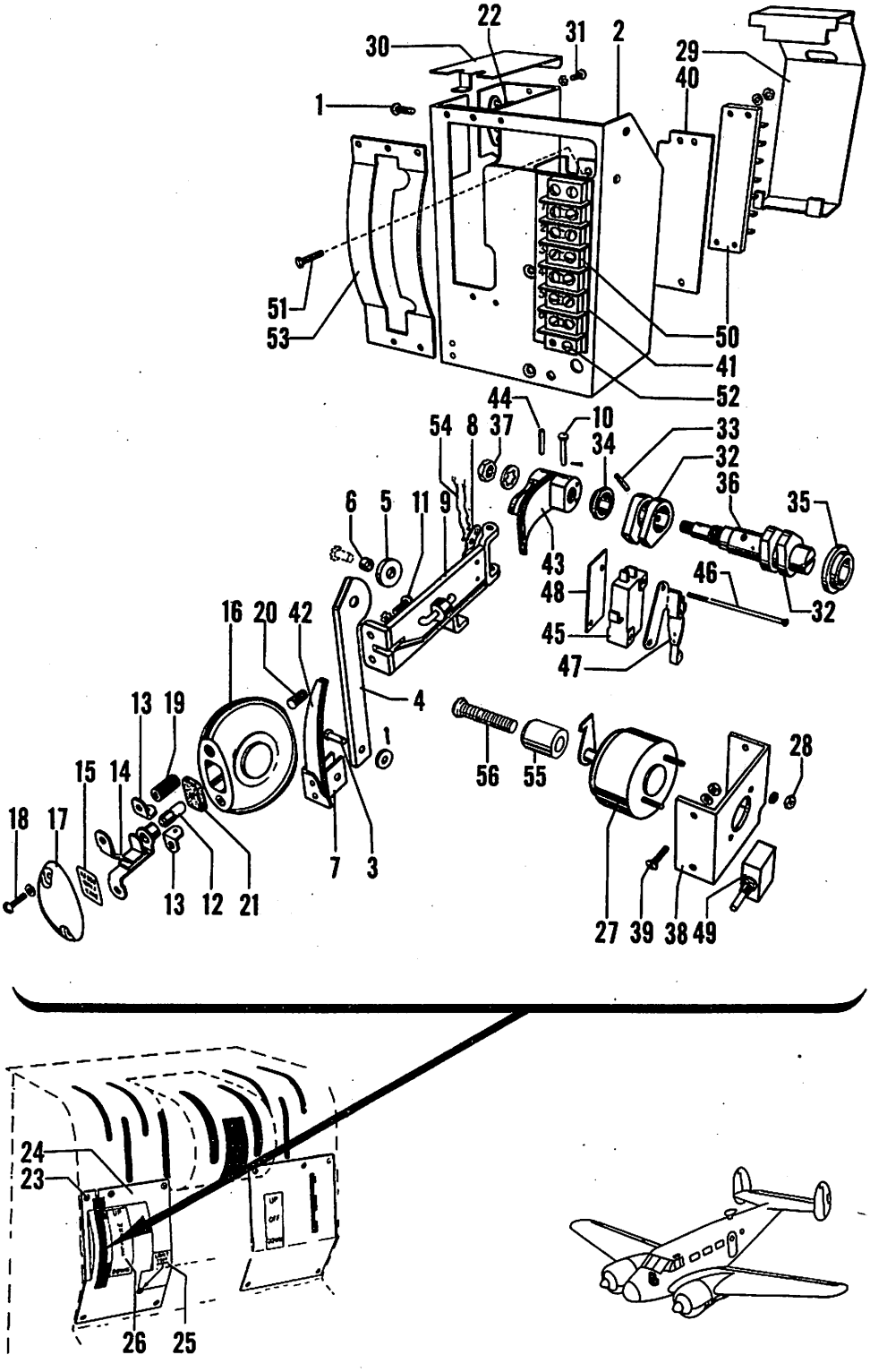

Figure 54. Landing Gear Switch Assembly

C45H-4-54

FIG. & INDEX NO.	PART NO.	DESCRIPTION 1 2 3 4 5 6 7	UNITS PER ASSY	USABLE ON CODE
54	694-180922	SWITCH ASSY,LANDING GEAR /SEE FIG. 53 FOR NHA/	REF	
		/ATTACHING PARTS/		
- 1	AN526-1032R6	SCREW	3	
		----*----		
- 2	894-180741	. BRACKET ASSY,LANDING GEAR SWITCH	1	
	894-180742	. LEVER ASSY,LANDING GEAR SWITCH	1	
		/ATTACHING PARTS/		
- 3	AN392-15	. PIN	1	
	AN960-4	. WASHER	1	
	AN380-2-1	. PIN,COTTER	1	
		----*----		
- 4	894-180751	. . LEVER,LANDING GEAR SWITCH	1	
- 5	894-180749	. . ROLLER,LANDING GEAR SWITCH LEVER	1	
- 6	NO NUMBER	. . BEARING,OILITE /12204/	1	
- 7	894-180745	. BRACKET,LEVER LANDING GEAR SWITCH	1	
	894-180777-1	. LIGHT ASSY,LANDING GEAR SWITCH	1	
- 8	894-180778	. . TERMINAL ASSY,LANDING GEAR SWITCH LEVER	1	
- 9	694-180940	. . LEVER ASSY,LANDING GEAR SWITCH OPERATING	1	
		/ATTACHING PARTS/		
- 10	AN392-33	. . PIN,FLAT HEAD	1	
	AN380-1-1	. . PIN,COTTER	1	
		----*----		
	894-180779	. . KNOB ASSY,LANDING GEAR SWITCH	1	
		/ATTACHING PARTS/		
- 11	AN515-6R8	. . SCREW	2	
	AN936A6	. . WASHER,LOCK	2	
		----*----		
- 12	AN3140-328	. . . LAMP,LANDING GEAR SWITCH LIGHT	1	
- 13	894-180765	. . . TERMINAL,LANDING GEAR SWITCH LIGHT	2	
- 14	894-180759	. . . SOCKET ASSY,LANDING GEAR SWITCH LIGHT	1	
- 15	894-180095	. . . PLACARD,LAMP IDENTIFICATION	1	
	894-180760	. . . KNOB ASSY,LANDING GEAR SWITCH	1	
- 16	894-180760-1	. . . . MOULDING,LANDING GEAR SWITCH LOWER	1	
- 17	894-180760-3	. . . . MOULDING,LANDING GEAR SWITCH UPPER	1	
		/ATTACHING PARTS/		
- 18	AN565-4R6	. . . . SCREW	1	
	AN936A4	. . . . WASHER,LOCK	1	
		----*----		
- 19	894-180754	. . . . NUT,LANDING GEAR SWITCH KNOB	1	
- 20	894-180756	. . . . NUT,LANDING GEAR SWITCH KNOB	1	
- 21	894-180786	. . . PAD,SHOCK ABSORBER LAMP	1	
- 22	894-180761	. . TERMINAL ASSY,LANDING GEAR SWITCH	1	
	894-180743	. DOOR ASSY,LANDING GEAR SWITCH	1	
		/ATTACHING PARTS/		
- 23	AN526-632R6	. SCREW	5	
		----*----		
- 24	894-180743-1	. . DOOR,LANDING GEAR SWITCH	1	
- 25	894-180089	. . PLACARD,LANDING GEAR LIGHT TEST SWITCH	1	
- 26	894-183874	. . PLACARD,LANDING GEAR SWITCH	1	
- 27	694-180923	. SOLENOID ASSY,LANDING GEAR SWITCH	1	
		/ATTACHING PARTS/		
- 28	AN365-832	. NUT	2	
	AN960-8*	. WASHER	2	
		----*----		
- 29	894-180744	. COVER,LANDING GEAR SWITCH	1	
- 30	894-180775	. COVER,LANDING GEAR SWITCH	1	
		/ATTACHING PARTS/		
- 31	AN515-4-4	. SCREW	1	
	AN936A4	. WASHER,LOCK	1	
		----*----		
- 32	894-180726	. CAM ASSY,LANDING GEAR SWITCH	2	
		/ATTACHING PARTS/		
- 33	59-022-094-0750	. PIN,ROLL /72962/	1	
		----*----		

*EQUAL AMOUNT OF WASHERS MUST BE USED ON EACH STUD.

FIG. & INDEX NO.	PART NO.	DESCRIPTION 1 2 3 4 5 6 7	UNITS PER ASSY	USABLE ON CODE
54 - 34	SF506-176	• BEARING,SUPER OILITE FLANGE /12204/ • • • • •	1	
- 35	SF500-145	• BEARING,SUPER OILITE FLANGE /12204/ • • • • •	1	
- 36	894-180731	• SHAFT,LANDING GEAR SWITCH • • • • • • • • • • /ATTACHING PARTS/	1	
- 37	AN345-10	• NUT •	1	
	AN936A10	• WASHER,LOCK • • • • • • • • • • • • • • • •	1	
		----*----		
- 38	894-180730	• BRACKET,LANDING GEAR SWITCH • • • • • • • • /ATTACHING PARTS/	1	
- 39	AN507-632-6	• SCREW • • • • • • • • • • • • • • • • • • •	4	
	AN960-6	• WASHER• • • • • • • • • • • • • • • • • • •	4	
	AN365-632	• NUT •	4	
		----*----		
- 40	894-180733	• INSULATOR ASSY,FWD TERMINAL SWITCH• • • • • •	1	
- 41	894-180734	• INSULATOR ASSY,REAR TERMINAL SWITCH • • • • •	1	
- 42	894-180738	• SPRING,VERTICAL LANDING GEAR SWITCH • • • • •	1	
- 43	894-180740	• SPRING ASSY,HORIZONTAL LANDING GEAR SWITCH• • /ATTACHING PARTS/	1	
- 44	59-022-094-0750	• PIN,ROLL /72962/• • • • • • • • • • • • • •	1	
		----*----		
- 45	AN3234-1	• SWITCH,LANDING GEAR • • • • • • • • • • • • /ATTACHING PARTS/	4	
- 46	NO NUMBER	• SCREW,4-40 X 1-31/32 FLAT HEAD /93907/• • • •	2	
		----*----		
- 47	JV-20	• ACTUATOR,LANDING GEAR SWITCH /40228/• • • • •	4	
- 48	894-183848	• INSULATOR,LANDING GEAR SWITCH • • • • • • • •	5	
- 49	IP-B-6	• SWITCH ASSY,LANDING GEAR /40228/• • • • • • •	1	
- 50	6-140	• STRIP,TERMINAL /75173/• • • • • • • • • • • /ATTACHING PARTS/	2	
- 51	AN507-440-8	• SCREW • • • • • • • • • • • • • • • • • • •	3	
- 52	AN515-4-10	• SCREW • • • • • • • • • • • • • • • • • • •	3	
	AN960-4	• WASHER• • • • • • • • • • • • • • • • • • •	6	
	AN365-440	• NUT •	6	
		----*----		
- 53	894-180746	• GATE,LANDING GEAR SWITCH• • • • • • • • • •	1	
- 54	42/39	• WIRE,/IN GROUPS OF 6/ /78655/ • • • • • • • •	7	
- 55	694-180921	• BUTTON• • • • • • • • • • • • • • • • • • • /ATTACHING PARTS/	1	
- 56	NAS387-832-16	• SCREW • • • • • • • • • • • • • • • • • • •	1	
	AN936D8	• WASHER• • • • • • • • • • • • • • • • • • •	1	
		----*----		

C45H-4-55

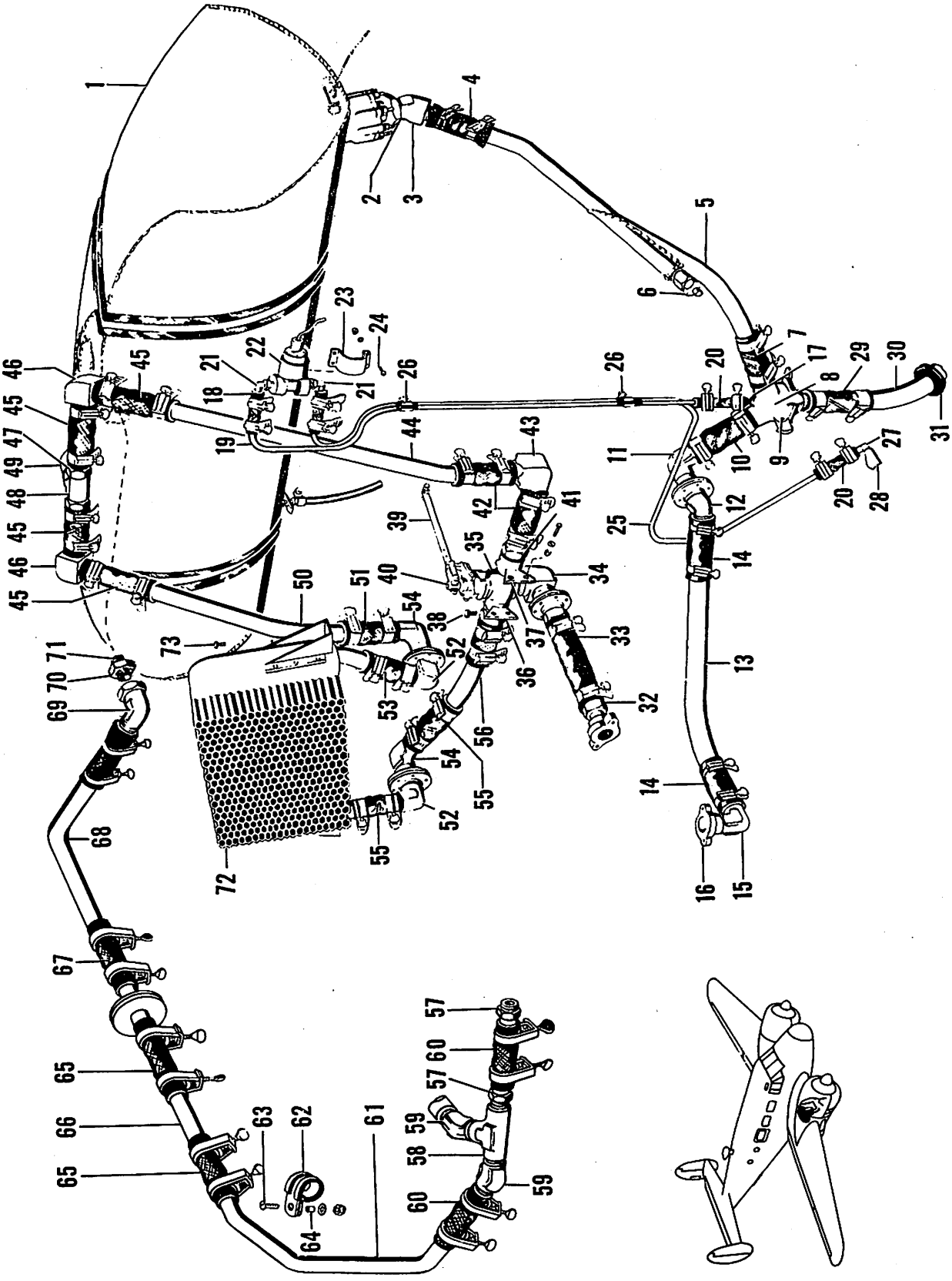

Figure 55. Nacelle Oil System Installation

FIG. & INDEX NO.	PART NO.	DESCRIPTION 1 2 3 4 5 6 7	UNITS PER ASSY	USABLE ON CODE
55	694-189740-2	SYSTEM INSTL,NACELLE OIL LH/SEE FIG. 1 FOR NHA/	1	
	694-189740-3	SYSTEM INSTL,NACELLE OIL RH/SEE FIG. 1 FOR NHA/	1	
- 1	189801P-8	. TANK ASSY,OIL LH /SEE FIG. 56/.	1	
	189801P-9	. TANK ASSY,OIL RH /SEE FIG. 56/.	1	
- 2	AN912-13D	. BUSHING	1	
- 3	AN844-16D	. ELBOW,45 DEGREE	1	
- 4	106200H-16-15	. HOSE.	1	
	AN737-46	. CLAMP,HOSE.	2	
- 5	84-189744	. TUBE ASSY,OIL TANK OUTLET LH.	1	
	84-189752	. TUBE ASSY,OIL TANK OUTLET RH.	1	
- 6	AN5525-2	. BULB,RESISTANCE	1	
	173-62	. GASKET,/19315/.	1	
- 7	106200H-16-13	. HOSE.	2	
	AN737-46	. CLAMP,HOSE.	2	
- 8	K1400-B-4-1*	. DRAIN,Y /75361/	1	
	37D6114-4*	. DRAIN,Y /USAF P/N/. . . . . /ATTACHING PARTS/	1	
- 9	AN3-24A	. BOLT.	2	
	AN960-10	. WASHER.	2	
	189749P	. SPACER.	2	
	AN365-1032	. NUT . . . . . ----*----	2	
- 10	106200H-16-17	. HOSE.	1	
	AN737-46	. CLAMP,HOSE.	2	
- 11	AN842-16D	. ELBOW,90 DEGREE	1	
- 12	AN844-16D	. ELBOW,45 DEGREE	1	
- 13	704-189754	. TUBE,ENGINE OIL INLET LH.	1	
	704-189755	. TUBE,ENGINE OIL INLET RH.	1	
- 14	106200FR-16-15	. HOSE.	2	
	AN737-56	. CLAMP,HOSE.	4	
- 15	AN842-16D	. ELBOW,90 DEGREE	1	
- 16	414-189741	. FLANGE.	1	
- 17	AN840-4D	. ADAPTER	1	
- 18	106200H-4-12	. HOSE.	2	
	AN737-22	. CLAMP,HOSE.	4	
- 19	84-189742	. TUBE,OIL DILUTION OUTLET LH	1	
	84-189749	. TUBE,OIL DILUTION OUTLET RH	1	
- 20	106200H-4-12	. HOSE.	2	
	AN737-22	. CLAMP,HOSE.	4	
- 21	AN842-4D	. ELBOW,90 DEGREE	2	
- 22	37D6210	. VALVE ASSY,OIL DILUTION /USAF P/N/.	1	
- 23	18S9741P	. BRACKET,OIL DILUTION VALVE. . . . . /ATTACHING PARTS/	1	
- 24	AN515-8-8	. SCREW	4	
	AN960-8	. WASHER.	4	
	AN365-832	. NUT . . . . . ----*----	4	
	104036-2-0108-0612	. FELT.	1	
- 25	84-189743	. TUBE,OIL DILUTION INLET LH.	1	
	84-189751	. TUBE ASSY,OIL DILUTION UPPER RH	1	
	4HTD	. UNION,/RH ONLY/ /45681/	1	
	84-189750	. TUBE ASSY,OIL DILUTION INLET LOWER RH	1	
- 26	S-242	. CLAMP	3	
	AN515-8-6	. SCREW	3	
	AN960-8	. WASHER.	3	
	AN365-832	. NUT	3	
- 27	AN842-4D	. ELBOW,90 DEGREE	1	
- 28	37A3528	. FITTING,RESTRICTED /USAF P/N/	1	
- 29	106200H-16-12	. HOSE.	1	
	AN737-46	. CLAMP,HOSE.	2	
- 30	704-189757	. TUBE,OIL DRAIN.	1	

*THESE PARTS ARE INTERCHAGEABLE.

FIG. & INDEX NO.	PART NO.	DESCRIPTION 1 2 3 4 5 6 7	UNITS PER ASSY	USABLE ON CODE
55 - 31	AN931-16-22	. GROMMET	1	
- 32	AN840-16D	. ADAPTER	1	
- 33	106200FR-16-19	. HOSE	1	
	AN737-56	. CLAMP,HOSE	2	
- 34	404-189807	. ELBOW,NACELLE OIL SYSTEM	1	
- 35	S-80	. VALVE ASSY,OIL BYPASS	1	
- 36	18S9753	. BRACKET,OIL BYPASS VALVE	2	
		/ATTACHING PARTS/		
- 37	AN3-4A	. BOLT	4	
- 38	AN3-11A	. BOLT	2	
	AN960-10	. WASHER	6	
	AN365-1032	. NUT	6	
		----*----		
- 39	18S992	. ARM,OIL BYPASS CONTROL	1	
		/ATTACHING PARTS/		
- 40	AN3-10	. BOLT	1	
	AN310-3	. NUT	1	
	AN380-2-2	. PIN,COTTER	1	
		----*----		
- 41	AN840-16	. ADAPTER	2	
- 42	106200H-16-12	. HOSE	2	
	AN737-46	. CLAMP,HOSE	4	
- 43	AN847-16D	. ELBOW,90 DEGREE	1	
- 44	94-189741	. TUBE,OIL TANK INLET	1	
- 45	106200H-16-12	. HOSE	4	
	AN737-46	. CLAMP,HOSE	8	
- 46	AN847-16D	. ELBOW,90 DEGREE	2	
- 47	AN840-16D	. ADAPTER	2	
- 48	AN917-6D	. TEE	1	
- 49	AN895-64	. NIPPLE	1	
- 50	94-189742	. TUBE,OIL TANK INLET FROM OIL RADIATOR	1	
- 51	106200H-16-12	. HOSE	1	
	AN737-46	. CLAMP,HOSE	2	
- 52	109639	. ELBOW,90 DEGREE	2	
- 53	106200FR-16-12	. HOSE	2	
	AN737-56	. CLAMP,HOSE	4	
- 54	AN842-16D	. ELBOW,90 DEGREE	2	
- 55	106200H-16-12	. HOSE	2	
	AN737-46	. CLAMP,HOSE	4	
- 56	704-189747	. TUBE,RADIATOR INLET	1	
- 57	109640	. NIPPLE	2	
- 58	AN917-3D	. TEE	2	
- 59	109638	. ELBOW,45 DEGREE	2	
- 60	106200FR-8-12	. HOSE	2	
	AN737-34	. CLAMP,HOSE	4	
- 61	804-189756	. TUBE ASSY,LOWER OIL TANK VENT	2	
- 62	AN755-8	. CLAMP	1	
		/ATTACHING PARTS/		
- 63	AN515-8-16	. SCREW	1	
- 64	100696-D12-06-016	. SPACER	1	
	AN365-832	. NUT	1	
		----*----		
- 65	106200FR-8-12	. HOSE	2	
	AN737-34	. CLAMP	4	
- 66	704-189742	. TUBE,OIL VENT FRONT LH	1	
	704-189743	. TUBE,OIL VENT FRONT RH	1	
- 67	106200H-8-15	. HOSE	1	
	AN737-30	. CLAMP	2	

FIG. & INDEX NO.	PART NO.	DESCRIPTION 1 2 3 4 5 6 7	UNITS PER ASSY	USABLE ON CODE
55 - 68	84-189747	• TUBE,NACELLE OIL TANK VENT• • • • • • • • •	1	
- 69	AN842-8D	• ELBOW,90 DEGREE • • • • • • • • • • • • • •	1	
- 70	AN910-3D	• COUPLING• • • • • • • • • • • • • • • • •	1	
- 71	AN911-3	• NIPPLE• • • • • • • • • • • • • • • • • •	1	
- 72	94-189850	• RADIATOR,OIL COOLING LH • • • • • • • • • •	1	
	94-189850-1	• RADIATOR,OIL COOLING RH • • • • • • • • • •	1	
		/ATTACHING PARTS/		
- 73	AN4-5	• BOLT• • • • • • • • • • • • • • • • • • •	4	
	AN960-416	• WASHER• • • • • • • • • • • • • • • • • •	4	
	AN365-428	• NUT • • • • • • • • • • • • • • • • • • •	4	
		----*----		

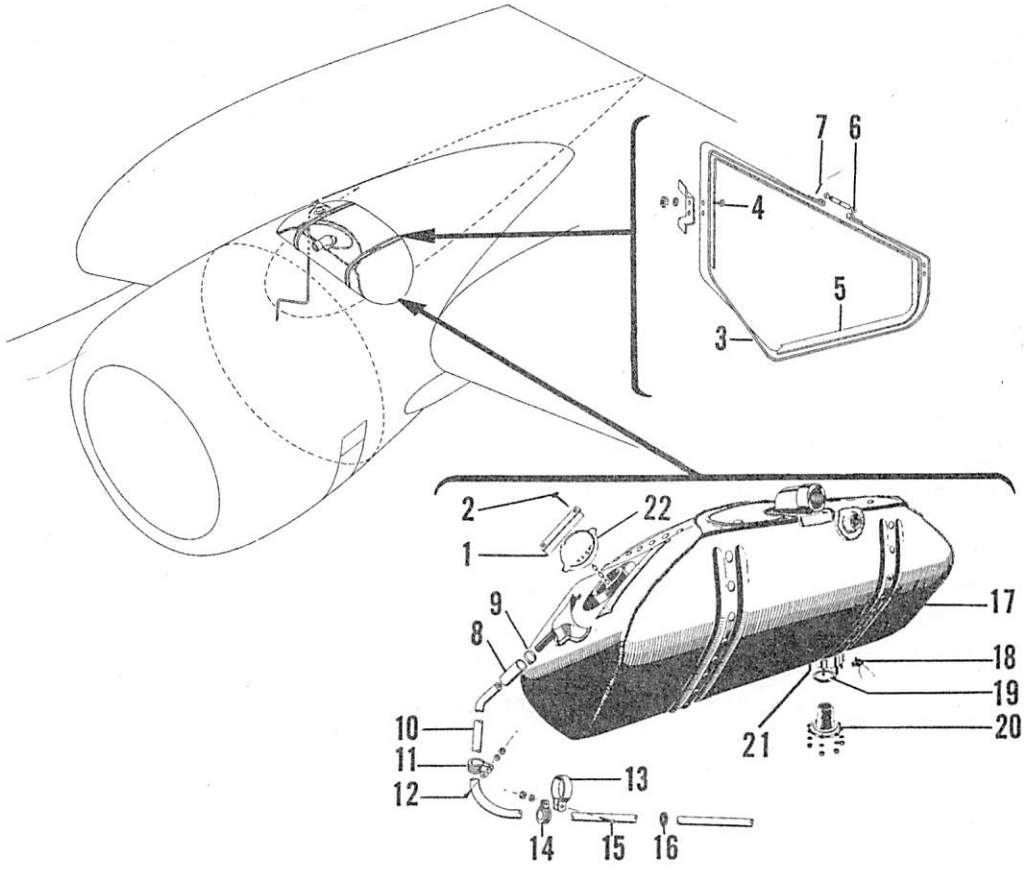

Figure 56. LH & RH Nacelle Oil Tank Installation

C45H-4-56

FIG. & INDEX NO.	PART NO.	DESCRIPTION 1 2 3 4 5 6 7	UNITS PER ASSY	USABLE ON CODE
56	694-189800	TANK INSTL,NACELLE OIL LH /SEE FIG. 1 FOR NHA/.	1	
	694-189800-1	TANK INSTL,NACELLE OIL RH /SEE FIG. 1 FOR NHA/.	1	
- 1	694-189818	. ANGLE,OIL TANK LID.	1	
		/ATTACHING PARTS/		
- 2	AN515-8R8	. SCREW	2	
	AN960-8	. WASHER.	2	
	AN365-832	. NUT	2	
		----*----		
- 3	189670P	. STRAP,WING OIL TANK	2	
		/ATTACHING PARTS/		
- 4	S-126	. BOLT.	4	
	AN960-10	. WASHER.	4	
	AN365-1032	. NUT	4	
		----*----		
- 5	206248-3-4500	. PAD ASSY,OIL TANK STRAP	2	
- 6	107464	. TURNBUCKLE ASSY	2	
		/ATTACHING PARTS/		
- 7	AN393-21	. PIN	2	
	AN380-2-2	. PIN,COTTER.	2	
		----*----		
- 8	694-189800-7	. HOSE.	1	
- 9	AN737RM22	. CLAMP,HOSE.	2	
- 10	189806	. TUBE,ENGINE OIL TANK DRAIN LH	1	
	189807	. TUBE,ENGINE OIL TANK DRAIN RH	1	

FIG. & INDEX NO.	PART NO.	DESCRIPTION 1 2 3 4 5 6 7	UNITS PER ASSY	USABLE ON CODE
56 - 11	766-6	. CLIP,/00502/.	1	
		/ATTACHING PARTS/		
- 12	AN515-8-7	. SCREW	1	
	AN960-8	. WASHER.	2	
	AN365-832	. NUT	2	
		-----*-----		
- 13	105933-6	. CLIP.	1	
- 14	AN742-18	. CLAMP	1	
		/ATTACHING PARTS/		
- 15	AN515-8-8	. SCREW	1	
	AN960-8	. WASHER.	1	
	AN365-832	. NUT	1	
		-----*-----		
- 16	AN931-6-10	. GROMMET	1	
- 17	189801P-8	TANK ASSY,OIL LH /SEE FIG. 55 FOR NHA/.	REF	
	189801P-9	TANK ASSY,OIL RH /SEE FIG. 55 FOR NHA/.	REF	
- 18	AAF771-2	. COCK,DRAIN.	1	
- 19	37A5949*	. GASKET.	1	
	AN6230-5*	. RING,O.	1	
- 20	404-189804	. FLANGE.	1	
		/ATTACHING PARTS/		
- 21	S-190-4C-106	. STUD.	8	
	AN960-416	. WASHER.	8	
	AN365-428	. NUT	8	
		-----*-----		
- 22	694-189819	. CAP ASSY,OIL TANK	1	

*THESE PARTS ARE INTERCHANGEABLE.

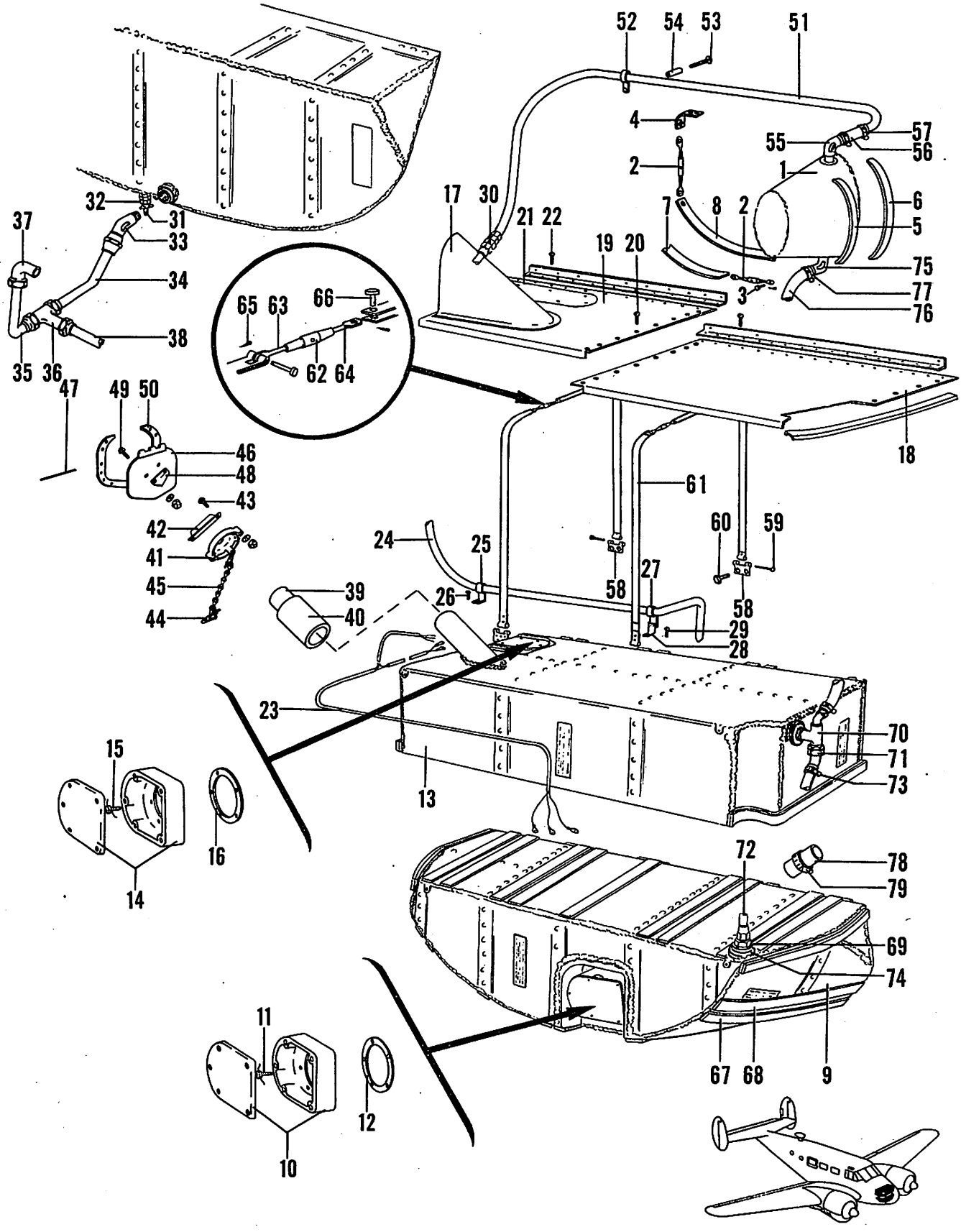

Figure 57. Baggage Compartment Fuel Tank Installation

C45H-4-57

FIG. & INDEX NO.	PART NO.	DESCRIPTION 1 2 3 4 5 6 7	UNITS PER ASSY	USABLE ON CODE
57	694-184400	TANK INSTL,BAGGAGE COMPARTMENT FUEL . . . . . /SEE FIG. 1 FOR NHA/	1	
	184402	. TANK INSTL,NOSE FUEL EXPANSION.	1	
- 1	184402-8	. . TANK,NOSE FUEL EXPANSION.	1	
- 2	107464	. . TURNBUCKLE ASSY . . . . . /ATTACHING PARTS/	2	
- 3	AN393-25	. . PIN	2	
	AN380-2-2	. . PIN,COTTER. . . . . ----*----	2	
- 4	206248-7-0112	. . PAD	1	
- 5	206248-7-0808	. . PAD	1	
- 6	206248-7-1400	. . PAD	1	
- 7	206248-7-0800	. . PAD	1	
- 8	206248-7-0912	. . PAD	1	
- 9	18970	. TANK ASSY,LOWER FRONT BAGGAGE COMPARTMENT . .	1	
- 10	18R9715	. . GAGE,BAGGAGE COMPARTMENT FUEL TANK. . . . . /ATTACHING PARTS/	1	
- 11	AN500A10-12	. . SCREW . . . . . ----*----	5	
- 12	189631	. . GASKET,FUEL GAGE.	1	
- 13	18971	. TANK,UPPER FRONT BAGGAGE COMPARTMENT FUEL . .	1	
- 14	18R9714	. . GAGE,BAGGAGE COMPARTMENT FUEL TANK. . . . . /ATTACHING PARTS/	1	
- 15	AN500A10-12	. SCREW . . . . . ----*----	5	
- 16	189631	. . GASKET,FUEL GAGE.	1	
	894-184410	. COVER INSTL,BAGGAGE COMPARTMENT FUEL TANK . .	1	
- 17	894-184410-4	. . COVER,BAGGAGE COMPARTMENT FUEL TANK	1	
- 18	894-184410-2	. . FLOOR,BAGGAGE COMPARTMENT FUEL TANK	1	
- 19	894-184410-3	. . FLOOR,BAGGAGE COMPARTMENT FUEL TANK . . . . /ATTACHING PARTS/	1	
- 20	AN526-832-6	. . SCREW . . . . . ----*----	7	
- 21	900-189024	. . COVER,LIQUIDOMETER INSPECTION DOOR. . . . . /ATTACHING PARTS/	2	
- 22	AN526-832-6	. . SCREW . . . . . ----*----	5	
- 23	824-180689	. HARNESS ASSY,NOSE GAS TANK LIQUIDOMETER . . .	1	
- 24	84-189612	. TUBE ASSY,LOWER BAGGAGE COMPARTMENT VENT. . .	1	
- 25	900-184403	. CLIP,BAGGAGE COMPARTMENT FUEL TANK DRAIN LINE /ATTACHING PARTS/	1	
- 26	AN526-832-6	. SCREW	2	
	AN960-8	. WASHER.	2	
	AN365-832	. NUT . . . . . ----*----	2	
- 27	AN742-8D	. CLIP.	3	
- 28	AN743-1	. BRACKET . . . . . /ATTACHING PARTS/	1	
- 29	AN515-8-10	. SCREW	3	
	AN960-8	. WASHER.	1	
	AN365-832	. NUT . . . . . ----*----	1	
- 30	AAF811HT-8D	. UNION	1	
	694-189635	. CARTRIDGE ASSY,BAGGAGE COMPARTMENT FUEL TANK.	1	
- 31	K1700B-2	. . COCK,DRAIN /75361/.	1	
- 32	694-189635-2	. . CARTRIDGE ASSY.	1	
- 33	AN823-10	. ELBOW,45 DEGREE	1	
- 34	694-189630	. TUBE ASSY,NOSE TANK OUTLET.	1	
- 35	404-189835	. TUBE ASSY,NOSE TANK RIGHT REAR DRAIN.	1	
- 36	AN824-10D	. TEE	1	
- 37	AN822-10D	. ELBOW,90 DEGREE	2	
- 38	694-189631	. TUBE ASSY,SELECTOR VALVE TO NOSE TANK LH. . .	1	
- 39	694-184410	. NECK ASSY,BAGGAGE COMPARTMENT FUEL TANK . . .	1	
- 40	106200H-32-15	. HOSE,AIRCRAFT SYNTHETIC	1	

FIG. & INDEX NO.	PART NO.	DESCRIPTION 1 2 3 4 5 6 7	UNITS PER ASSY	USABLE ON CODE
57	694-189634	. CAP ASSY,BAGGAGE COMPARTMENT FUEL TANK. . . .	1	
- 41	694-189634-2	. . CAP ASSY,BAGGAGE COMPARTMENT FUEL TANK. . .	1	
- 42	694-189634-4	. . ANGLE	1	
		/ATTACHING PARTS/		
- 43	AN515-8-8	. . SCREW	2	
	AN960-8	. . WASHER.	2	
	AN365-832	. . NUT	2	
		----*----		
- 44	GA-641-4	. . COUPLER,/81910/	2	
- 45	109615-2-040	. . CHAIN	1	
- 46	694-184411	. DOOR ASSY,FUEL TANK FILLER NECK	1	
		/ATTACHING PARTS/		
- 47	105774-C-063-00228	. PIN	1	
		----*----		
- 48	694-184414	. ANGLE	1	
		/ATTACHING PARTS/		
- 49	AN515-8-8	. SCREW	2	
	AN960-8	. WASHER.	2	
	AN365-832	. NUT	2	
		----*----		
- 50	694-184413	. SEAL,FUEL TANK FILLER NECK.	1	
- 51	694-189632	. TUBE ASSY,BAGGAGE COMPARTMENT FUEL TANK VENT.	1	
- 52	AN742-8D	. CLIP.	1	
		/ATTACHING PARTS/		
- 53	AN515-8-10	. SCREW	1	
- 54	100696-D12-07-007	. SPACER.	1	
		----*----		
- 55	AN842-8D	. ELBOW,90 DEGREE	1	
- 56	106200H-8-15	. HOSE.	1	
- 57	AN737-30	. CLAMP,HOSE.	2	
- 58	84-189719	. FASTENER,BAGGAGE COMPARTMENT TANK	4	
		/ATTACHING PARTS/		
- 59	AN393-51	. PIN	1	
	AN380-2-2	. PIN,COTTER.	1	
- 60	AN3-4A	. BOLT.	2	
	AN365-1032	. NUT	2	
	AN960-10	. WASHER.	2	
		----*----		
- 61	84-189719	. STRAP ASSY,BAGGAGE COMPARTMENT TANK	2	
- 62	AN155-16S	. . BARREL.	1	
- 63	AN170-16RS	. . EYE,CABLE	1	
- 64	AN170-16LS	. . EYE,CABLE	1	
		/ATTACHING PARTS/		
- 65	AN380-2-2	. . PIN,COTTER.	2	
- 66	AN393-25	. . PIN	1	
	AN393-9	. . PIN	1	
		----*----		
- 67	206248-3-7200	. STRIP	11	
- 68	206248-3-3600	. STRIP	1	
- 69	AN911-3	. NIPPLE.	1	
- 70	AN917-3D	. TEE	1	
- 71	AN840-8D	. ADAPTER	1	
- 72	106200H-8-22	. HOSE.	1	
- 73	AN737-3D	. CLAMP,HOSE.	2	
- 74	AN840-8	. ADAPTER	1	
- 75	AN844-8D	. ELBOW,45 DEGREE	2	
- 76	106200H-8-52	. HOSE.	1	
- 77	AN737-30	. CLAMP,HOSE.	2	
- 78	106200H-32-12	. HOSE.	1	
- 79	AN737-82	. HOSE,CLAMP.	2	

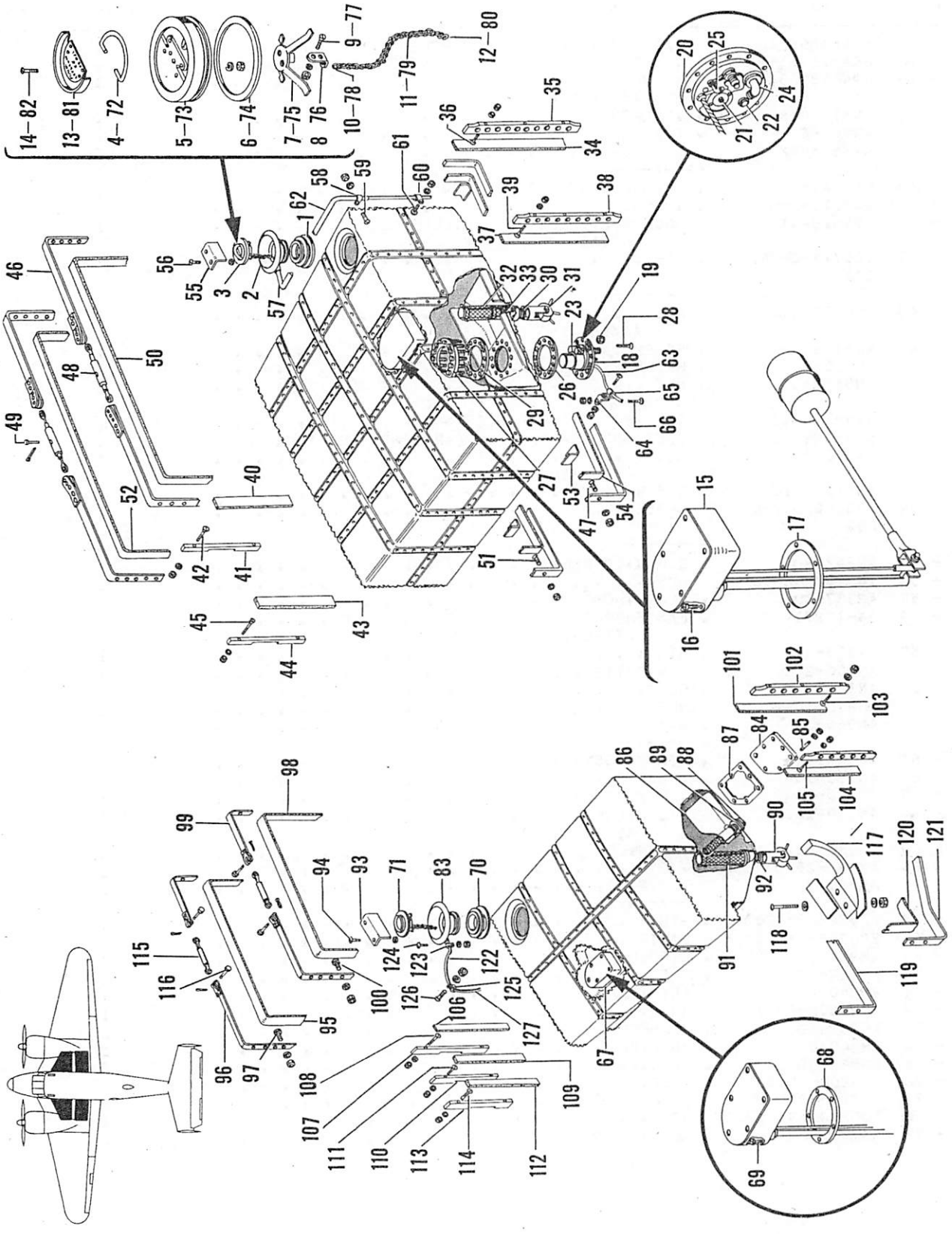

Figure 58. Wing Fuel Tank Installation

FIG. & INDEX NO.	PART NO.	DESCRIPTION 1 2 3 4 5 6 7	UNITS PER ASSY	USABLE ON CODE
58	694-189710	TANK INSTL,MAIN FUEL LH /SEE FIG. 1 FOR NHA/. .	1	
	694-189710-1	TANK INSTL,MAIN FUEL RH /SEE FIG. 1 FOR NHA/. .	1	
	694-189604	. TANK ASSY,CENTER SECTION FUEL MAIN LH	1	
	694-189604-1	. TANK ASSY,CENTER SECTION FUEL MAIN RH	1	
- 1	189610	. . NECK,FILLER WING FUEL TANK.	1	
- 2	189614	. . COLLAR ASSY,WING FUEL TANK.	1	
- 3	694-189620-4	. . CAP ASSY,FUEL TANK.	1	
	694-189620-8	. . . CAP ASSY,FUEL TANK.	1	
- 4	189622	. . . . HANDLE,FUEL TANK CAP ASSY	1	
- 5	189621	. . . . CASTING,FUEL TANK CAP ASSY.	1	
- 6	108059	. . . . GASKET,FUEL TANK CAP ASSY	1	
- 7	189623	. . . . SPIDER,FUEL TANK CAP.	1	
- 8	189624	. . . . LUG,FUEL TANK CAP CHAIN	1	
		/ATTACHING PARTS/		
- 9	AN507-8-14	. . . . SCREW	2	
	AN935-8	. . . . WASHER.	2	
	AN340-8	. . . . NUT	2	
		----*----		
- 10	694-189620-2	. . . . RING,FUEL TANK CAP ASSY	1	
- 11	109615-2-080	. . . . CHAIN,FUEL TANK CAP ASSY.	1	
- 12	189628	. . . . HOOK,FUEL TANK CAP ASSY	1	
- 13	694-189621-6	. . . PLATE ASSY,FUEL TANK CAP.	1	
		/ATTACHING PARTS/		
- 14	AN515-8-12	. . . SCREW	4	
	AN935-8	. . . WASHER.	4	
	AN340-8	. . . NUT	4	
		----*----		
- 15	189630-1	. . GAGE ASSY,MAIN FUEL TANK LH	1	
	189630-2	. . GAGE ASSY,MAIN FUEL TANK RH	1	
		/ATTACHING PARTS/		
- 16	AAF500A-10-12	. . SCREW	5	
		----*----		
- 17	189361	. . GASKET,FUEL GAGE.	1	
- 18	NO NUMBER	. . PUMP ASSY,SUBMERGED BOOST /SEE INDEX 20/. .	1	
		/GFAE/		
	NO NUMBER	. . PUMP ASSY,SUBMERGED BOOST /SEE INDEX 20/. .	1	
		/GFAE/		
		/ATTACHING PARTS/		
- 19	AN365-428	. . NUT	12	
	AN960-416	. . WASHER.	12	
		----*----		
- 20	26900-3*	. . . PUMP ASSY,SUBMERGED BOOST /00502/	1	
	24000-3*	. . . PUMP ASSY,SUBMERGED BOOST /00502/	1	
- 21	AN932-2	. . . PLUG.	AR	
- 22	AN932C2	. . . PLUG.	AR	
- 23	AN913-3	. . . PLUG.	1	
- 24	AN822-8	. . . ELBOW,90 DEGREE	1	
- 25	AN822-4	. . . ELBOW,90 DEGREE	1	
- 26	694-189612	. . GASKET,BOOST PUMP FLANGE.	1	
	694-189609	. . SUMP ASSY,CENTER SECTION MAIN FUEL TANK LH.	1	
	694-189609-1	. . SUMP ASSY,CENTER SECTION MAIN FUEL TANK RH.	1	
	694-189609-2	. . . PAN,CENTER SECTION MAIN FUEL TANK LH. . .	1	
	694-189609-3	. . . PAN,CENTER SECTION MAIN FUEL TANK RH. . .	1	
- 27	694-189610	. . . RING ASSY,MAIN FUEL TANK SUMP	1	
		/ATTACHING PARTS/		
- 28	AN507-832-6	. . . SCREW	4	
		----*----		
- 29	694-189611	. . . GASKET,BOOST PUMP MOUNTING FLANGE	1	

*THESE PARTS ARE INTERCHANGEABLE.

FIG. & INDEX NO.	PART NO.	DESCRIPTION 1 2 3 4 5 6 7	UNITS PER ASSY	USABLE ON CODE
58 - 30	189606U	. . CARTRIDGE ASSY,CORROSION RESISTING.	1	
- 31	K1700B-2	. . . COCK,CARTRIDGE ASSY /75361/	1	
- 32	189606U-4	. . . SCREEN & PLUG ASSY.	1	
- 33	AN900-16	. . GASKET.	1	
- 34	206248-2-2012	. PAD ASSY.	1	
- 35	694-181109	. STRIP ASSY,CENTER SECTION TANK FRONT INBD . . /ATTACHING PARTS/	1	
- 36	AN505-8-32	. SCREW	3	
	AN960-8	. WASHER.	3	
	AN365-8-32	. NUT	3	
		----*----		
- 37	206248-2-1816	. PAD ASSY.	1	
- 38	694-181108	. STRIP,CENTER SECTION MAIN FUEL TANK INBD REAR /ATTACHING PARTS/	1	
- 39	AN505-8-32	. SCREW	3	
	AN960-8	. WASHER.	3	
	AN365-832	. NUT	3	
		----*----		
- 40	206248-2-1800	. PAD ASSY.	1	
- 41	804-181162	. STRIP,GAS TANK MOUNTING FWD . . . . . /ATTACHING PARTS/	1	
- 42	AN505-8-16	. SCREW	2	
	AN960-8	. WASHER.	2	
	AN365-832	. NUT	2	
		----*----		
- 43	206248-2-1600	. PAD ASSY.	1	
- 44	804-181163	. STRIP,GAS TANK MOUNTING REAR. . . . . /ATTACHING PARTS/	1	
- 45	AN505-8-16	. SCREW	2	
	AN960-8	. WASHER.	2	
	AN365-832	. NUT	2	
		----*----		
- 46	18965-2	. STRIP ASSY,WING FUEL TANKS MAIN . . . . . /ATTACHING PARTS/	1	
- 47	S-162	. BOLT.	8	
	AN960-10	. WASHER.	8	
	AN365-1032	. NUT	8	
		----*----		
- 48	107464	. TURNBUCKLE ASSY . . . . . /ATTACHING PARTS/	2	
- 49	AN393-11	. PIN	2	
	AN380-2-2	. PIN,COTTER.	2	
		----*----		
- 50	206248-2-11108	. PAD ASSY,WING FUEL TANKS MAIN	1	
	18965-1	. STRIP,WING FUEL TANKS MAIN. . . . . /ATTACHING PARTS/	1	
- 51	S-162	. BOLT.	8	
	AN960-10	. WASHER.	8	
	AN365-1032	. NUT	8	
		----*----		
- 52	206248-2-10504	. PAD ASSY.	1	
- 53	694-189711	. ANGLE,FUEL TANK STRAP	4	
- 54	206248-10-0400	. PAD ASSY.	4	
- 55	694-189722	. ANGLE,FUEL TANK COVER . . . . . /ATTACHING PARTS/	1	
- 56	AN515-8-8	. SCREW	2	
	AN960-8	. WASHER.	2	
	AN365-832	. NUT	2	
		----*----		
- 57	103636-1-1000	. TUBE.	1	
- 58	AN735D6	. CLAMP . . . . . /ATTACHING PARTS/	2	
- 59	AN515-8-7	. SCREW	1	
	AN960-8	. WASHER.	1	
	AN365-832	. NUT	1	
		----*----		

FIG. & INDEX NO.	PART NO.	DESCRIPTION 1 2 3 4 5 6 7	UNITS PER ASSY	USABLE ON CODE
58 - 60	AN742D6	• CLIP • /ATTACHING PARTS/	2	
- 61	AN515-8-7	• SCREW •	1	
	AN960-8	• WASHER •	1	
	AN365-832	• NUT •	1	
- 62	189812	• TUBE,FUEL TANK FILLER NECK DRAIN • • • • • • •	1	
- 63	694-189614	• TUBE ASSY,BOOST PUMP DRAIN LH • • • • • • • •	1	
	694-189613	• TUBE ASSY,BOOST PUMP DRAIN RH • • • • • • • •	1	
- 64	AN743-12	• CLIP •	1	
- 65	AN742-6C	• CLAMP • /ATTACHING PARTS/	1	
- 66	AN515-8-7	• SCREW •	2	
	AN960-8	• WASHER •	2	
	AN365-832	• NUT •	2	
	694-189720	TANK INSTL,CENTER SECTION REAR FUEL LH • • • • /SEE FIG. 1 FOR NHA/	1	
	694-189720-1	TANK INSTL,CENTER SECTION REAR FUEL RH • • • • /SEE FIG. 1 FOR NHA/	1	
	694-189605	• TANK ASSY,CENTER SECTION REAR FUEL LH • • • •	1	
	694-189605-1	• TANK ASSY,CENTER SECTION REAR FUEL RH • • • •	1	
- 67	189726-1	• • GAGE,FUEL TANK REAR LH /36536/ • • • • • •	1	
	189726-2	• • GAGE,FUEL TANK REAR RH /36536/ • • • • • •	1	
- 68	189631	• • GASKET,FUEL GAGE • • • • • • • • • • • • • /ATTACHING PARTS/	1	
- 69	AN500A10-12	• • SCREW • • • • • • • • • • • • • • • • • • •	5	
- 70	189610	• • NECK,WING FUEL TANK FILLER • • • • • • • •	1	
- 71	694-189620-6	• • CAP ASSY,FUEL TANK • • • • • • • • • • • •	1	
	694-189620-8	• • • CAP ASSY,FUEL TANK • • • • • • • • • • •	1	
- 72	189622	• • • • HANDLE,FUEL TANK CAP • • • • • • • • •	1	
- 73	189621	• • • • CASTING,FUEL TANK FILLER NECK CAP • • •	1	
- 74	108059	• • • • GASKET,FUEL TANK • • • • • • • • • • •	1	
- 75	189623	• • • • SPIDER,FUEL TANK CAP • • • • • • • • •	1	
- 76	189624	• • • • LUG,FUEL TANK CAP CHAIN • • • • • • • • /ATTACHING PARTS/	1	
- 77	AN507-8-14	• • • • SCREW • • • • • • • • • • • • • • • • •	2	
	AN935-8	• • • • WASHER • • • • • • • • • • • • • • • • •	2	
	AN340-8	• • • • NUT • • • • • • • • • • • • • • • • • •	2	
- 78	694-189620-2	• • • • RING • • • • • • • • • • • • • • • • • •	1	
- 79	109615-2-080	• • • • CHAIN • • • • • • • • • • • • • • • • •	1	
- 80	189628	• • • • HOOK,FUEL TANK CAP • • • • • • • • • •	1	
- 81	694-189621-4	• • • PLATE ASSY,FUEL TANK CAP • • • • • • • • /ATTACHING PARTS/	1	
- 82	AN515-8-12	• • • SCREW • • • • • • • • • • • • • • • • • •	4	
	AN935-8	• • • WASHER • • • • • • • • • • • • • • • • • •	4	
	AN340-8	• • • NUT • • • • • • • • • • • • • • • • • • •	4	
- 83	189614	• • COLLAR ASSY,WING FUEL TANK FILLER NECK • •	1	
- 84	189726U	• • PLATE,FUEL TANK SUMP REAR • • • • • • • • /ATTACHING PARTS/	1	
- 85	189602U	• • STUD,FUEL TANK SUMP • • • • • • • • • • •	7	
	AN316-4	• • NUT •	7	
	AN960-416	• • WASHER • • • • • • • • • • • • • • • • • • •	7	
- 86	189724U	• • SUMP,FUEL TANK REAR • • • • • • • • • • • •	1	
- 87	189725U	• • GASKET,FUEL TANK SUMP REAR • • • • • • • •	1	
- 88	189728U	• • STRAINER ASSY,TANK OUTLET REAR • • • • • •	1	
- 89	AN900-16	• • GASKET • • • • • • • • • • • • • • • • • • •	1	
	189606U	• • CARTRIDGE ASSY,CORROSION RESISTING • • • •	1	
- 90	K1700B-2	• • • COCK,CARTRIDGE ASSY /75361/ • • • • • •	1	
- 91	189606U-4	• • • SCREEN & PLUG • • • • • • • • • • • • •	1	
- 92	AN900-16	• • GASKET • • • • • • • • • • • • • • • • • • •	1	

FIG. & INDEX NO.	PART NO.	DESCRIPTION 1 2 3 4 5 6 7	UNITS PER ASSY	USABLE ON CODE
58 - 93	694-189722	. ANGLE,FUEL TANK COVER	1	
		/ATTACHING PARTS/		
- 94	AN515-8-8	. SCREW	2	
	AN960-8	. WASHER	2	
	AN365-832	. NUT	2	
		----*----		
- 95	206248-2-5904	. FELT	1	
- 96	189651-1	. STRAP ASSY,FUEL TANK	1	
		/ATTACHING PARTS/		
- 97	S-162	. BOLT	4	
	AN365-1032	. NUT	4	
	AN960-10	. WASHER	8	
		----*----		
- 98	206248-2-1912	. FELT	1	
- 99	189651-2	. STRAP	1	
		/ATTACHING PARTS/		
-100	S-162	. BOLT	4	
	AN365-1032	. NUT	4	
	AN960-10	. WASHER	8	
		----*----		
-101	206248-2-1100	. FELT	1	
-102	181109	. STRIP,FUEL TANK REAR	1	
		/ATTACHING PARTS/		
-103	AN505-8-32	. SCREW	2	
	AN365-832	. NUT	2	
	AN960-8	. WASHER	2	
		----*----		
-104	206248-2-1304	. FELT	1	
	181108	. STRIP,FUEL TANK REAR	1	
		/ATTACHING PARTS/		
-105	AN505-8-32	. SCREW	2	
	AN960-8	. WASHER	2	
	AN365-832	. NUT	2	
		----*----		
-106	206248-2-1500	. FELT	1	
-107	181111	. STRIP,FUEL TANK REAR	1	
		/ATTACHING PARTS/		
-108	AN505-8-18	. SCREW	2	
	AN960-8	. WASHER	2	
	AN365-832	. NUT	2	
		----*----		
-109	206248-2-1200	. FELT	1	
-110	181110	. STRIP,FUEL TANK REAR	1	
		/ATTACHING PARTS/		
-111	AN505-8-18	. SCREW	2	
	AN960-8	. WASHER	2	
	AN365-832	. NUT	2	
		----*----		
-112	206248-2-1012	. FELT	1	
-113	181107	. STRIP,FUEL TANK REAR	1	
		/ATTACHING PARTS/		
-114	AN505-8-18	. SCREW	2	
	AN960-8	. WASHER	2	
	AN365-832	. NUT	2	
		----*----		
-115	107464	. TURNBUCKLE ASSY	2	
		/ATTACHING PARTS/		
-116	AN303-21	. PIN	2	
	AN380-2-2	. PIN,COTTER	2	
		----*----		
-117	189653	. SPACER,FUEL TANK STRAP REAR	1	
		/ATTACHING PARTS/		
-118	AN515-8-24	. SCREW	1	
	AN515-8-20	. SCREW	1	
	AN960-8	. WASHER	4	
	AN365-832	. NUT	2	
		----*----		

FIG. & INDEX NO.	PART NO.	DESCRIPTION 1 2 3 4 5 6 7	UNITS PER ASSY	USABLE ON CODE
58 -119	206248-2-0308	. FELT.	1	
-120	206248-3-0908	. FELT.	1	
-121	206248-3-5908	. FELT.	1	
-122	106043-0804-080	. TUBE.	1	
-123	AN735D6	. CLAMP	2	
		/ATTACHING PARTS/		
-124	AN340-8-5	. SCREW	1	
	AN935-8	. WASHER.	1	
		----*----		
-125	AN742-4	. CLAMP	2	
		/ATTACHING PARTS/		
-126	AN515-8-8	. SCREW	1	
	AN960-8	. WASHER.	1	
	AN365-832	. NUT	1	
		----*----		
-127	189750	. TUBE,FILLER NECK DRAIN LINE	1	

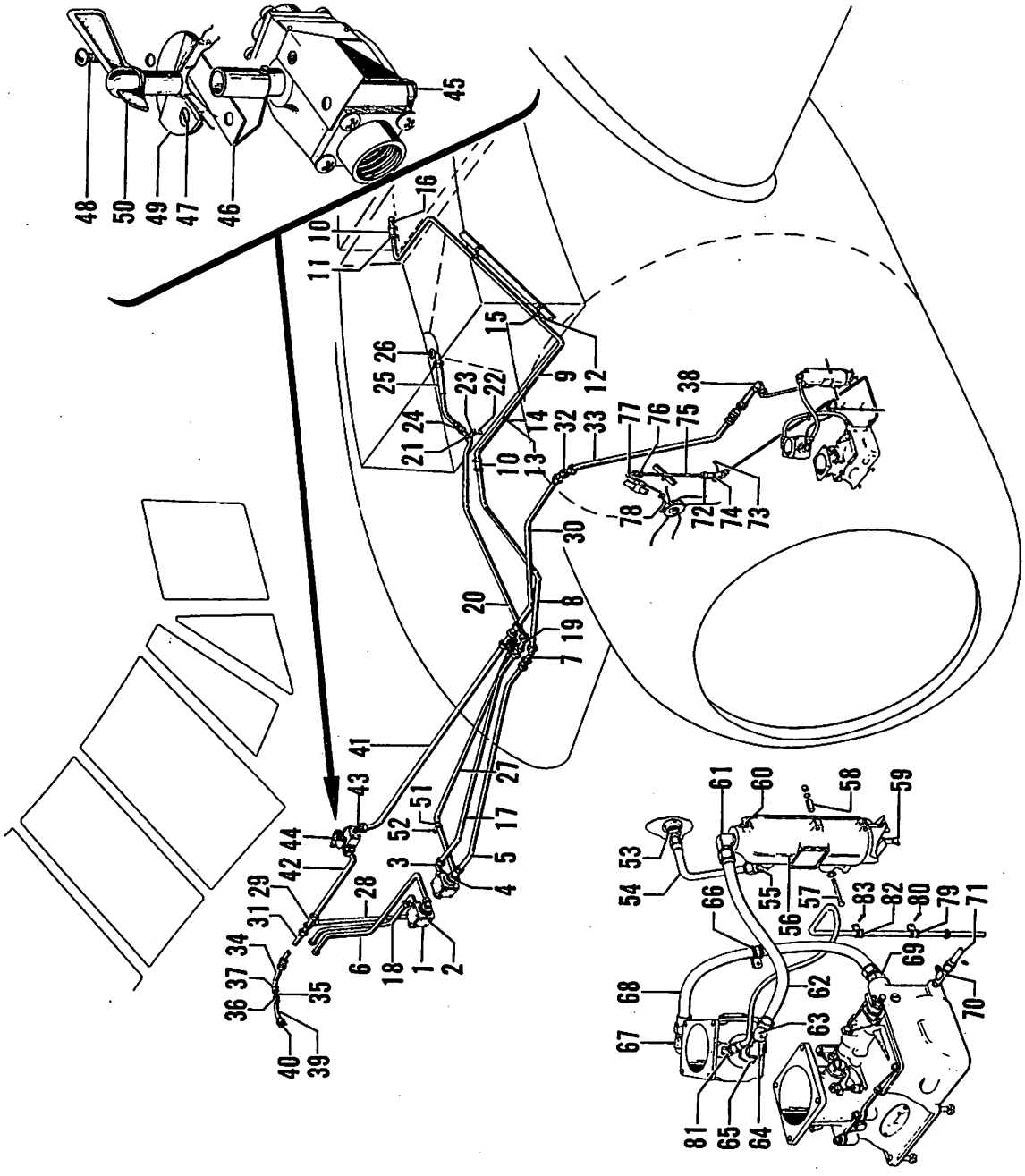

Figure 59. Fuel System Installation

FIG. & INDEX NO.	PART NO.	DESCRIPTION 1 2 3 4 5 6 7	UNITS PER ASSY	USABLE ON CODE
59	694-189700	SYSTEM INSTL,FUSELAGE FUEL /SEE FIG. 1 FOR NHA/	1	
- 1	TCB15200-4	. VALVE,FUEL /59875/.	2	
		/ATTACHING PARTS/		
- 2	AN520-10-20	. SCREW	4	
	AN960-10	. WASHER.	4	
	AN365-1032	. NUT	4	
		----*----		
- 3	AN822-10D	. ELBOW,90 DEGREE	5	
- 4	AN816-10D	. NIPPLE.	1	
- 5	694-189701-44	. TUBE ASSY,FUEL VALVE LH	1	
- 6	694-189701-52	. TUBE ASSY,FUEL VALVE RH	1	
- 7	AN837-10D	. ELBOW,45 DEGREE	2	
	AN960A1416	. WASHER.	2	
	AN624-10D	. NUT	4	
- 8	407-189687	. TUBE ASSY,REAR TANK LH.	1	
	694-189703-5	. TUBE ASSY,REAR TANK RH.	1	A-16
	407-189729	. TUBE ASSY,REAR TANK RH.	1	A-15
- 9	407-189688	. TUBE ASSY,REAR TANK LH.	1	
	694-189703-9	. TUBE ASSY,REAR TANK RH.	1	A-16
	407-189728	. TUBE ASSY,REAR TANK RH.	1	A-15
- 10	106200H-10-15	. HOSE.	4	
- 11	AN737-34	. CLAMP,HOSE.	8	
- 12	AN741-11	. CLAMP	4	
- 13	AN742D10	. CLAMP	6	
		/ATTACHING PARTS/		
- 14	AN520-10-18	. SCREW	1	
- 15	AN520-10-8	. SCREW	1	
	AN960-10	. WASHER.	1	
	AN365-1032	. NUT	1	
		----*----		
- 16	AN842-10	. ELBOW	2	
- 17	694-189701-48	. TUBE ASSY,FUEL VALVE LH	1	
- 18	694-189701-56	. TUBE ASSY,FUEL VALVE RH	1	
- 19	AN833-10D	. ELBOW,90 DEGREE	2	
	AN960A1416	. WASHER.	4	
	AN924-10D	. NUT	2	
- 20	694-189701-64	. TUBE ASSY,FRONT TANK LH	1	A-21,B-5
	694-189701-30	. TUBE ASSY,FRONT TANK LH	1	A-22,B-6
	694-189703-1	. TUBE ASSY,FRONT TANK RH	1	A-16
	694-189701-60	. TUBE ASSY,FRONT TANK RH	1	A-23,B-5
	694-189701-26	. TUBE ASSY,FRONT TANK RH	1	A-22,B-6
- 21	AN742D12CB	. CLIP,BONDED	2	A-21,B-5
- 22	AN743-12	. BRACKET	2	A-21,B-5
		/ATTACHING PARTS/		
- 23	AN520-10-7	. SCREW	2	
	AN960-10	. WASHER.	2	
	AN365-1032	. NUT	2	
		----*----		
- 24	AN919-15D	. REDUCER	2	
- 25	694-189700-1	. HOSE ASSY,FRONT TANK.	2	A-21,B-5
	694-189701-34	. TUBE ASSY,FRONT TANK LH	1	A-22,B-6
	694-189701-38	. TUBE ASSY,FRONT TANK RH	1	A-22,B-6
- 26	AN822-8	. ELBOW	2	
- 27	694-189701-18	. TUBE ASSY,FUEL VALVE LH	1	
- 28	694-189701-22	. TUBE ASSY,FUEL VALVE RH	1	
- 29	AN804-10D	. TEE	2	
	AN960A1416	. WASHER.	4	
	AN924-10D	. NUT	2	
- 30	694-189701-2	. TUBE ASSY,CROSSFEED LH.	1	
- 31	694-189701-14	. TUBE ASSY,CROSSFEED RH.	1	
- 32	AN837-10D	. ELBOW	1	
	108492-A1416-116	. WASHER.	4	
	AN924-10D	. NUT	2	

FIG. & INDEX NO.	PART NO.	DESCRIPTION 1 2 3 4 5 6 7	UNITS PER ASSY	USABLE ON CODE
59 - 33	407-189732	• TUBE ASSY,ENGINE FUEL NACELLE LH•	1	
- 34	407-189733	• TUBE ASSY,ENGINE FUEL NACELLE RH•	1	
- 35	W1500-5/8D	• VALVE,CHECK /79318/	2	
- 36	106200H-10-11	• HOSE•	4	
- 37	AN737-34	• CLAMP,HOSE•	8	
- 38	AN842-10D	• ELBOW,90 DEGREE LH•	1	
- 39	407-189747	• TUBE ASSY,ENGINE FUEL NACELLE RH•	1	
- 40	AN823-10D	• ELBOW,45 DEGREE RH•	1	
- 41	694-189701-6	• TUBE ASSY,CROSSFEED	1	
- 42	694-189701-10	• TUBE ASSY,CROSSFEED	1	
- 43	AN823-10D	• ELBOW	2	
- 44	404-189669	• VALVE ASSY,CROSSFEED•	1	
		/ATTACHING PARTS/		
- 45	AN3-20A	• BOLT•	2	
	AN960-10	• WASHER•	2	
	AN365-1032	• NUT	2	
		----*----		
- 46	404-189776	• BRACKET,CROSSFEED	1	
		/ATTACHING PARTS/		
- 47	AN505-8-16	• SCREW	2	
- 48	AN515-8-14	• SCREW	2	
	AN960-8	• WASHER•	4	
	AN365-832	• NUT	4	
		----*----		
- 49	404-189704	• PLATE,FUEL COCK DIAL•	1	
- 50	404-189759	• HANDLE ASSY,CROSSFEED VALVE	1	
- 51	AN742-12C	• CLAMP	2	
		/ATTACHING PARTS/		
- 52	AN520-10-8	• SCREW	2	
	AN960-10	• WASHER•	2	
	AN365-832	• NUT	2	
		----*----		
	694-189730	PIPING INSTL,ENGINE SECTION FUEL•	1	
		/SEE FIG. 1 FOR NHA/		
- 53	AN816-10	• NIPPLE•	2	
- 54	694-189702-6	• TUBE ASSY,ENGINE SECTION FUEL SYSTEM•	2	
- 55	AN832-10	• ELBOW,45 DEGREE	2	
- 56	NO NUMBER	• STRAINER,FUEL /TYPE C-2A/ /70138/	2	
		/ATTACHING PARTS/		
- 57	AN4-30	• BOLT•	2	
- 58	S-246	• SPACER•	2	
	AN960-416	• WASHER•	4	
	AN365-428	• NUT	2	
		----*----		
- 59	K1700B-2	• COCK,FUEL STRAINER DRAIN /75361/•	2	
- 60	AN913-1	• PLUG•	2	
- 61	AN822-10	• ELBOW,90 DEGREE	2	
- 62	AN6264-10D-11-1/4	• HOSE ASSY,/LH ONLY/	1	
	AN6264-10D-26	• HOSE ASSY,/RH ONLY/	1	
- 63	AN823-10	• ELBOW,45 DEGREE	2	
- 64	AN914-4	• ELBOW,90 DEGREE	2	
- 65	AN912-7	• BUSHING	2	
- 66	AN742D16C	• CLAMP,/RH ONLY/	1	
	AN742D14C	• CLAMP,/RH ONLY/	1	
		/ATTACHING PARTS/		
	AN515-8-10	• SCREW	1	
	AN960-8	• WASHER•	1	
	AN365-832	• NUT	1	
		----*----		
- 67	AN822-8	• ELBOW,90 DEGREE	2	
	AN912-8	• BUSHING	2	
- 68	AN6264-8-14-5/8	• HOSE•	2	
- 69	AN823-8	• ELBOW,45 DEGREE	2	
- 70	AN826-4	• TEE	2	
	AN912-1	• BUSHING	2	

FIG. & INDEX NO.	PART NO.	DESCRIPTION 1 2 3 4 5 6 7	UNITS PER ASSY	USABLE ON CODE
59 - 71	694-189702-54	. TUBE ASSY,ENGINE SECTION FUEL SYSTEM LH . . .	1	
	694-189702-62	. TUBE ASSY,ENGINE SECTION FUEL SYSTEM RH . . .	1	
- 72	AV-1B1100	. VALVE,SOLENOID /73760/.	2	
		/ATTACHING PARTS/		
- 73	AN3-13A	. BOLT.	1	
	AN960-10	. WASHER.	1	
	AN365-1032	. NUT	1	
	NAS43DD3-24	. SPACER.	1	
		----*----		
- 74	AN816-4	. NIPPLE.	4	
- 75	694-189702-46	. TUBE ASSY,ENGINE SECTION FUEL SYSTEM LH . . .	1	
	694-189702-58	. TUBE ASSY,ENGINE SECTION FUEL SYSTEM RH . . .	1	
- 76	AN815-4	. UNION	1	
- 77	694-189702-42	. TUBE ASSY,ENGINE SECTION FUEL SYSTEM LH . . .	1	
	694-189702-50	. TUBE ASSY,ENGINE SECTION FUEL SYSTEM RH . . .	1	
- 78	AN822-4B	. ELBOW,PRIMER CLUSTER 90 DEGREE.	2	
- 79	AN742D6C	. CLAMP	2	
		/ATTACHING PARTS/		
- 80	AN515-8-10	. SCREW	1	
	AN960-8	. WASHER.	1	
	AN365-832	. NUT	1	
		----*----		
- 81	AN823-4	. ELBOW,45 DEGREE	2	
	694-189702-38	. TUBE ASSY,ENGINE SECTION FUEL	2	
- 82	AN742-16	. CLAMP	2	
	AN742-6C	. CLAMP	2	
		/ATTACHING PARTS/		
- 83	AN520-10-8	. SCREW	1	
	AN960-10	. WASHER.	1	
	AN365-1032	. NUT	1	
		----*----		

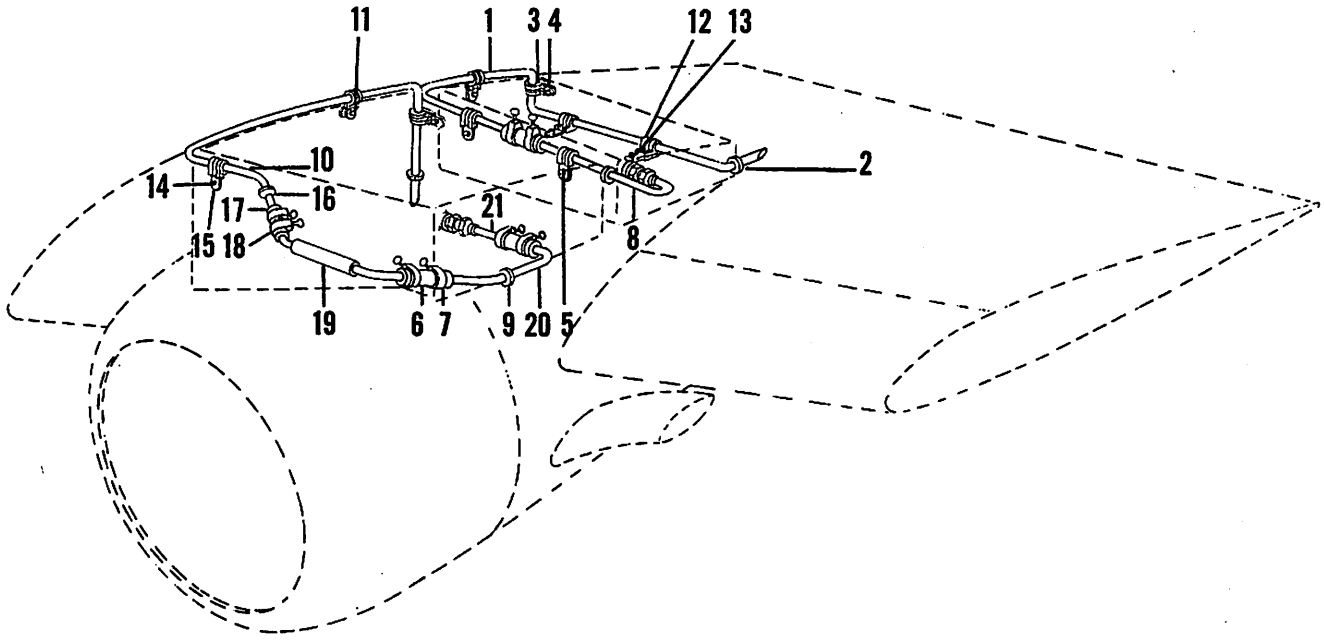

Figure 60. Fuel Tank Vent Line Installation

C45H-4-60

FIG. & INDEX NO.	PART NO.	DESCRIPTION 1 2 3 4 5 6 7	UNITS PER ASSY	USABLE ON CODE
60	694-189767	LINE INSTL,WING FUEL TANK VENT LH /SEE FIG. 1 FOR NHA/	1	
	694-189767-1	LINE INSTL,WING FUEL TANK VENT RH /SEE FIG. 1 FOR NHA/	1	
- 1	694-189783	. TUBE,REAR FUEL TANK VENT LH	1	
	694-189787	. TUBE,REAR FUEL TANK VENT RH	1	
- 2	AN931-8-13	. GROMMET	1	
- 3	105933-8	. CLIP /ATTACHING PARTS/	6	
- 4	AN520-10-16	. SCREW	4	
- 5	AN520-10-7	. SCREW	2	
	AN960-10	. WASHER	6	
	AN365-1032	. NUT	6	
		----*----		
- 6	106200H-8-15	. HOSE	1	
- 7	AN737-30	. CLAMP	2	
- 8	694-189793	. TUBE ASSY,REAR FUEL TANK VENT OUTBD	1	
	AN816-8	. NIPPLE	1	
- 9	AN931-8-13	. GROMMET	2	
- 10	694-189792	. TUBE,MAIN FUEL TANK VENT LH	1	
	694-189773	. TUBE,MAIN FUEL TANK VENT RH	1	
- 11	766-8	. CLIP,/00502/	2	

FIG. & INDEX NO.	PART NO.	DESCRIPTION 1 2 3 4 5 6 7	UNITS PER ASSY	USABLE ON CODE
60 - 12	105933-8	. CLIP.	1	
		/ATTACHING PARTS/		
- 13	AN520-10-16	. SCREW	2	
- 14	AN520-10-7	. SCREW	1	
- 15	100696-D10-07-016	. SPACER.	2	
	AN960-10	. WASHER.	3	
	AN365-1032	. NUT	3	
		----*----		
- 16	AN931-12-17	. GROMMET	1	
- 17	106200H-8-15	. HOSE.	3	
- 18	AN737-30	. CLAMP	6	
- 19	694-189794	. TUBE ASSY,MAIN FUEL TANK MIDDLE VENT.	1	
- 20	694-189816	. TUBE,MAIN FUEL TANK VENT LINE NACELLE LH. . .	1	
	694-189813	. TUBE,MAIN FUEL TANK VENT LINE NACELLE RH. . .	1	
- 21	694-189814	. TUBE ASSY,MAIN FUEL TANK VENT LINE OUTLET . .	1	
	AN816-8	. NIPPLE.	1	

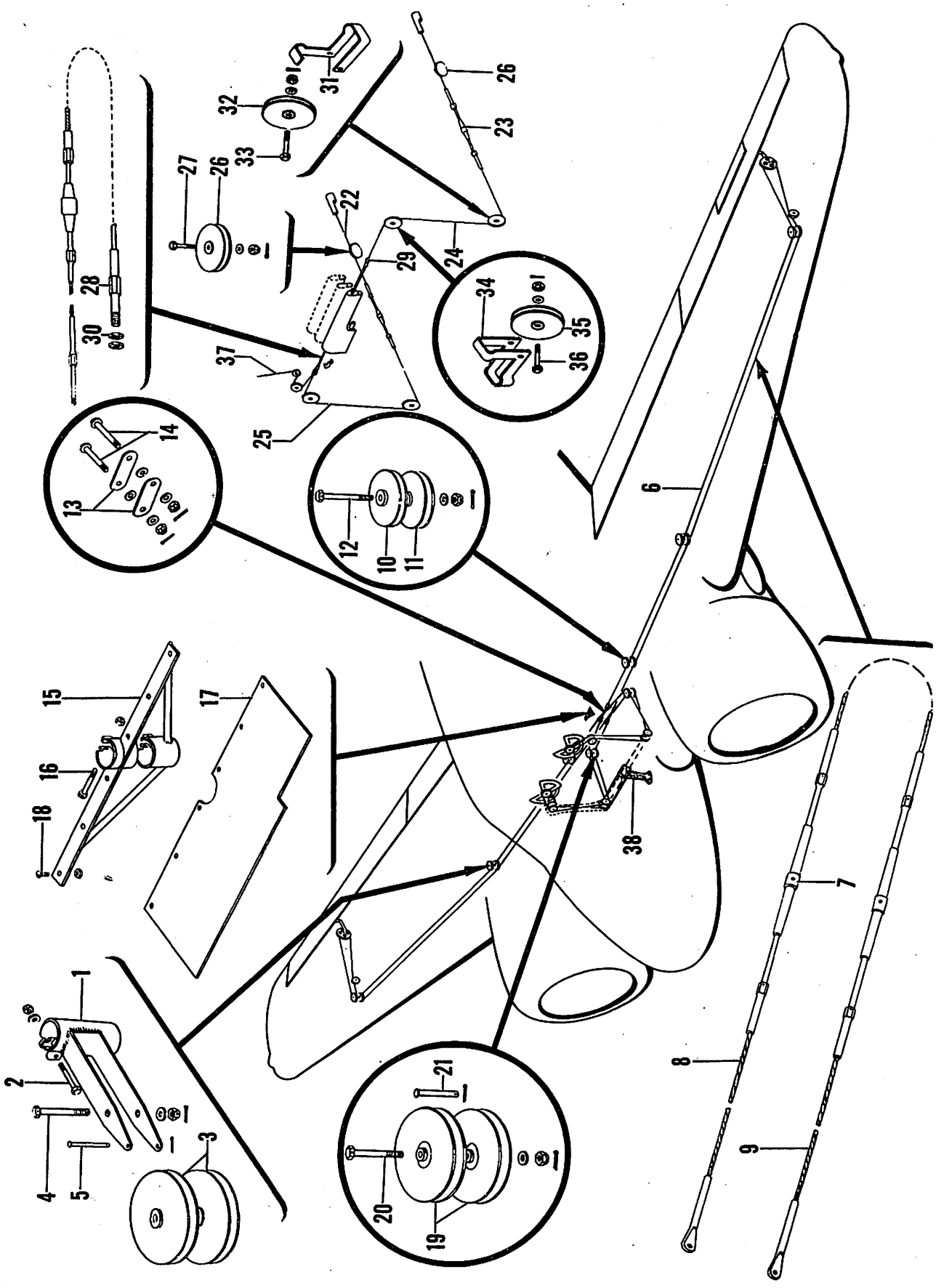

Figure 61. Aileron Control Installation

FIG. & INDEX NO.	PART NO.	DESCRIPTION 1 2 3 4 5 6 7	UNITS PER ASSY	USABLE ON CODE
61	694-187000	CONTROLS INSTL,FLIGHT /SEE FIG. 1 FOR NHA/	1	A-1
	694-187001	CONTROLS INSTL,FLIGHT /SEE FIG. 1 FOR NHA/	1	B
	694-187003	CONTROLS INSTL,FLIGHT /SEE FIG. 1 FOR NHA/	1	A-2
	18732	. LINK ASSY,AILERON /SEE FIG. 17/	1	
	187300	. PULLEY ASSY,AILERON BELLCRANK CONTROL LH /SEE FIG. 17/	1	
	187300-1	. PULLEY ASSY,AILERON BELLCRANK CONTROL RH /SEE FIG. 18/	1	
	187007-2	. BOLT,CABLE LOCKING /SEE FIG. 17/	1	
	AN960-416	. WASHER	1	
	AN310-4	. NUT	1	
	AN380-2-2	. PIN,COTTER	1	
	187132	. PULLEY,IDLER /SEE FIG. 17/	1	
	AN210-4B	. PULLEY,/SEE FIG. 17/	2	
- 1	814-187354	. BRACKET ASSY,CONTROL CABLE PULLEY LH	1	
	814-187354-1	. BRACKET ASSY,CONTROL CABLE PULLEY RH /ATTACHING PARTS/	1	
- 2	AN4-10A	. BOLT	2	
	AN960-416L	. WASHER	2	
	AN365-428	. NUT	2	
		----*----		
- 3	AN210-4B	. PULLEY /ATTACHING PARTS/	2	
- 4	AN4-14	. BOLT	1	
	AN960-416	. WASHER	1	
	AN310-4	. NUT	1	
		----*----		
- 5	AN392-35	. PIN	1	
	AN960-416	. WASHER	1	
	AN380-2-2	. PIN,COTTER	1	
- 6	404-187030	. CABLE ASSY,AILERON OUTBD	1	
	404-187030-2	. . CABLE,AILERON CENTER /SEE FIG. 17/	1	
- 7	AN155-32L	. . BARREL	2	
- 8	NAS304-34-0723	. . CABLE ASSY,AILERON	1	
- 9	NAS304-35-065	. . CABLE ASSY,AILERON	1	
- 10	AN210-3B	. PULLEY,TOP	1	
- 11	BB-128	. PULLEY,FORMICA /SERIES 2/ /80251/ /ATTACHING PARTS/	1	
- 12	AN4-15	. BOLT	1	
	AN960-416	. WASHER	1	
	AN310-4	. NUT	1	
		----*----		
- 13	187006	. LINK,AILERON CONTROL CABLE /ATTACHING PARTS/	2	
- 14	AN23-15/M/	. BOLT	2	
	AN960-10L	. WASHER	2	
	AN960-10	. WASHER	2	
	AN310-3	. NUT	2	
	AN380-2-2	. PIN,COTTER	2	
		----*----		
- 15	84-187064	. BRACKET ASSY,AILERON CABLE FAIRLEAD SUPPORT /ATTACHING PARTS/	1	
- 16	AN3-7A	. BOLT	2	
	AN365-1032	. NUT	2	
		----*----		
- 17	84-187063	. FAIRLEAD,AILERON CABLES /ATTACHING PARTS/	1	
- 18	AN515-8-8	. SCREW	6	
	AN365-832	. NUT	6	
		----*----		
- 19	18754-2	. PULLEY,AILERON CABLE SPECIAL /ATTACHING PARTS/	4	
- 20	AN4-14/M/	. BOLT	2	
	AN960-416	. WASHER	2	
	AN310-4	. NUT	2	
		----*----		

FIG. & INDEX NO.	PART NO.	DESCRIPTION 1 2 3 4 5 6 7	UNITS PER ASSY	USABLE ON CODE
61 - 21	AN392-37	• PIN	2	A-1,B
	AN380-2-2	• PIN,COTTER	4	A-1,B
- 22	NAS304-04-0323	• CABLE ASSY,AILERON	2	A-1,B
- 23	AN155-32L	• BARREL	2	A-1,B
- 24	NAS304-55-0441	• CABLE ASSY,AILERON LH	1	A-1,B
- 25	NAS304-55-0463	• CABLE ASSY,AILERON RH	1	A-1,B
- 26	AN210-3B	• PULLEY	2	A-1,B
		/ATTACHING PARTS/		
- 27	AN4-16	• BOLT	1	
	AN960-416	• WASHER	1	
	AN310-4	• NUT	1	
	AN380-2-2	• PIN,COTTER	1	
		----*----		
- 28	AN155-32S	• BARREL	1	A-1,B
- 29	794-187021	• BARREL ASSY,SERVO ROD GUIDE	1	A-1,B
- 30	AN316-4R	• NUT	2	A-1,B
- 31	794-187015	• GUARD,SERVO PULLEY LOWER	2	A-1,B
- 32	AN210-4B	• PULLEY	2	A-1,B
		/ATTACHING PARTS/		
- 33	AN4-15/M/	• BOLT	1	
	AN960-416	• WASHER	1	
	AN310-4	• NUT	1	
	AN380-2-2	• PIN,COTTER	1	
		----*----		
- 34	794-187025	• GUARD,SERVO PULLEY UPPER LH	1	A-1,B
	794-187025-1	• GUARD,SERVO PULLEY UPPER RH	1	A-1,B
- 35	AN210-4B	• PULLEY	2	A-1,B
		/ATTACHING PARTS/		
- 36	AN4-16/M/	• BOLT	1	
	AN960-416L	• WASHER	1	
	AN310-4	• NUT	1	
	AN380-2-2	• PIN,COTTER	1	
		----*----		
- 37	894-187050	• CABLE INSTL,AUTO PILOT FOLLOW UP	1	A-1,B
		/SEE FIG. 68/		
- 38	734-187500	• COLUMN ASSY,TORQUE SHAFT & CONTROL	1	A-1,B
		/SEE FIG. 67/		
	894-187500	• COLUMN ASSY,TORQUE SHAFT & CONTROL	1	A-2
		/SEE FIG. 67/		

C45H-4-62

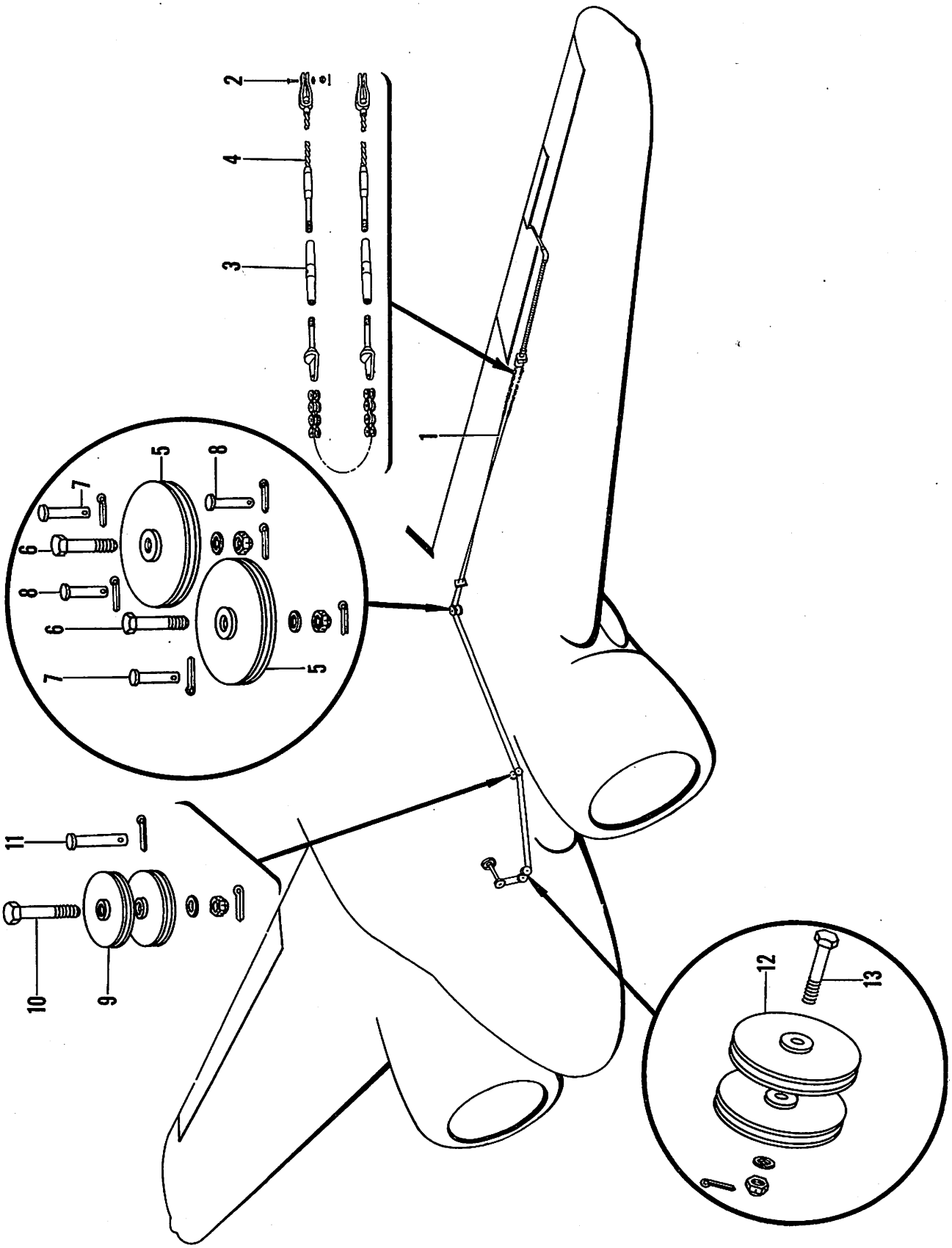

Figure 62. Aileron Tab Installation

FIG. & INDEX NO.	PART NO.	DESCRIPTION 1 2 3 4 5 6 7	UNITS PER ASSY	USABLE ON CODE
62	694-187000	CONTROL INSTL,FLIGHT /SEE FIG. 1 FOR NHA/	REF	A-1
	694-187001	CONTROL INSTL,FLIGHT /SEE FIG. 1 FOR NHA/	REF	B
	694-187003	CONTROL INSTL,FLIGHT /SEE FIG. 1 FOR NHA/	REF	A-2
- 1	407-187106	. CABLE ASSY,AILERON TAB CONTROL.	1	
		/ATTACHING PARTS/		
- 2	AN3-6	. BOLT.	2	
	AN960-10L	. WASHER.	2	
	AN310-3	. NUT	2	
	AN380-2-2	. PIN,COTTER.	2	
		----*----		
	407-187106-2	. . CHAIN,/SEE FIG. 17/	1	
	102809-A078-014	. . PIN,/SEE FIG. 17/	2	
	187661	. . STOP,/SEE FIG. 17/.	2	
- 3	AN155-8S	. . BARREL.	2	
- 4	407-187016-6	. . CABLE ASSY,AILERON TAB CONTROL.	2	
- 5	AN210-2B	. PULLEY.	2	
		/ATTACHING PARTS/		
- 6	AN3-7	. BOLT.	1	
	AN960-10	. WASHER.	1	
	AN310-3	. NUT	1	
		----*----		
- 7	AN392-19	. PIN	1	
- 8	AN392-15	. PIN	3	
	AN380-2-2	. PIN,COTTER.	4	
- 9	AN210-1B	. PULLEY.	2	
		/ATTACHING PARTS/		
- 10	AN3-11	. BOLT.	1	
	AN960-10	. WASHER.	1	
	AN310-3	. NUT	1	
		----*----		
- 11	AN392-23	. PIN	1	
	AN380-2-2	. PIN,COTTER.	1	
- 12	AN210-2B	. PULLEY.	2	
		/ATTACHING PARTS/		
- 13	AN3-11	. BOLT.	1	
	AN960-10	. WASHER.	1	
	AN310-3	. NUT	1	
	AN380-2-2	. PIN,COTTER.	1	
		----*----		

C45H-4-63

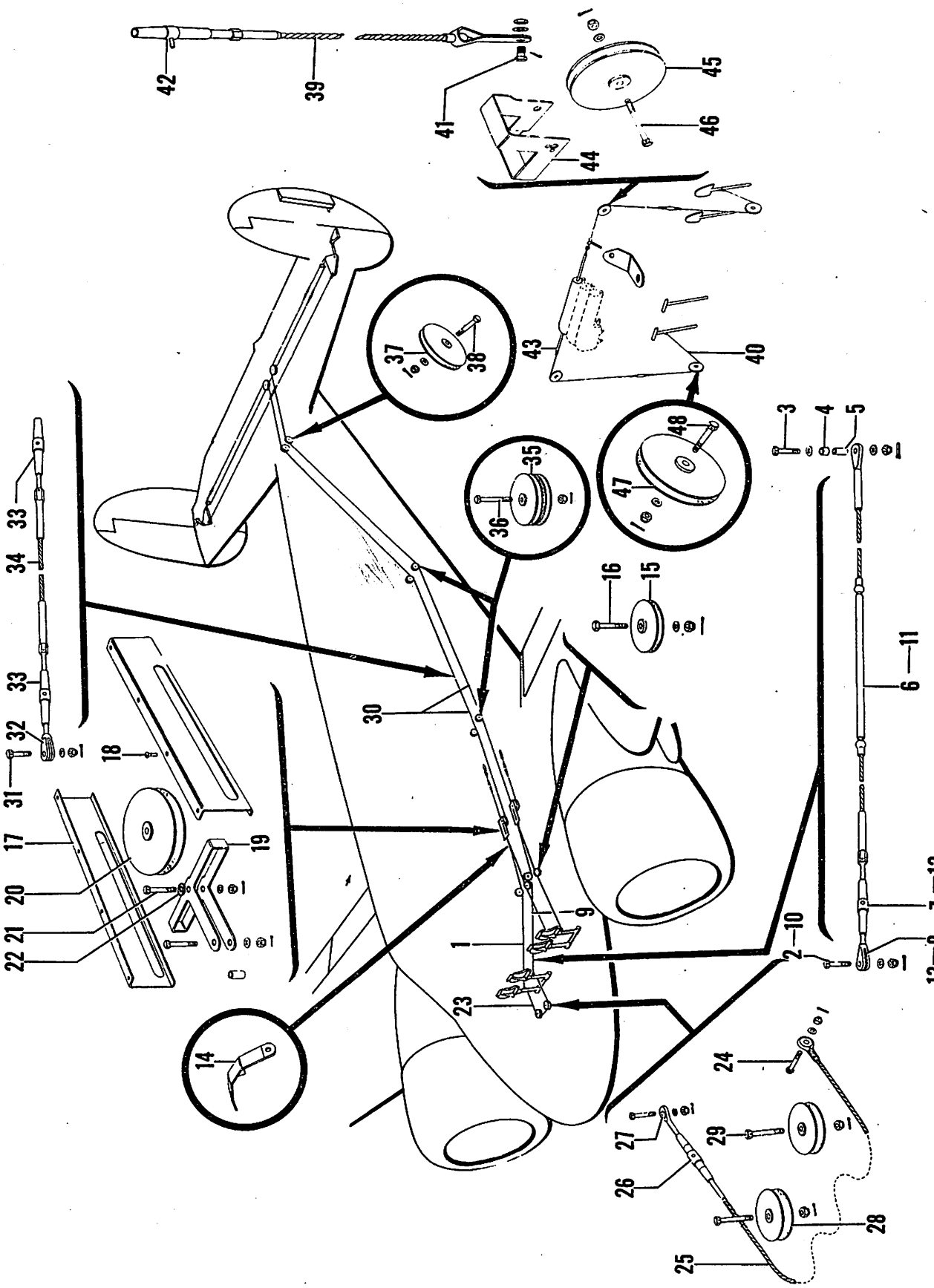

Figure 63. Rudder Control Installation

FIG. & INDEX NO.	PART NO.	DESCRIPTION 1 2 3 4 5 6 7	UNITS PER ASSY	USABLE ON CODE
63	694-187000	CONTROL INSTL,FLIGHT /SEE FIG. 1 FOR NHA/	REF	A-1
	694-187001	CONTROL INSTL,FLIGHT /SEE FIG. 1 FOR NHA/	REF	B
	694-187003	CONTROL INSTL,FLIGHT /SEE FIG. 1 FOR NHA/	REF	A-2
- 1	404-184014	. CABLE ASSY,COPILOTS RH & PILOTS RUDDER.	3	
		/ATTACHING PARTS/		
- 2	AN3-6/M/	. BOLT.	1	
	AN960-10	. WASHER.	1	
	AN310-3	. NUT	1	
	AN380-2-2	. PIN,COTTER.	1	
- 3	187059/M/	. BOLT,RUDDER REDUCTION PULLEY ATTACHING.	2	A-1,B
	AN960-416	. WASHER.	2	
	100951-X-063-009-020	. WASHER.	2	A-2
	AN960-416L	. WASHER.	2	
- 4	100801-X6-0094	. BUSHING	2	
- 5	100696-S10-08016	. SPACER.	2	A-1,B
	105739-S0250-0312-0500	. SPACER.	2	A-2
	AN320-4	. NUT	1	
	AN380-2-2	. PIN,COTTER.	1	
		----*----		
- 6	404-187014-2	. . CABLE ASSY,PILOTS RUDDER.	1	
- 7	AN155-32L	. . BARREL.	1	
- 8	AN161-32LL	. . FORK.	1	
- 9	404-187015	. CABLE ASSY,COPILOTS RUDDER LH	1	
		/ATTACHING PARTS/		
- 10	AN3-6/M/	. BOLT.	1	
	AN960-10	. WASHER.	1	
	AN310-3	. NUT	1	
	AN380-2-2	. PIN,COTTER.	1	
		----*----		
- 11	404-187015-8	. . CABLE,COPILOTS RUDDER	1	
- 12	AN155-32L	. . BARREL.	1	
- 13	AN161-32LL	. . FORK.	1	
- 14	184200-208	. GUARD,TRUSS RUDDER PULLEY	2	
- 15	18754-1	. PULLEY.	4	
		/ATTACHING PARTS/		
- 16	S-126-22/M/	. BOLT.	1	
	AN320-4	. NUT	1	
	AN380-2-2	. PIN,COTTER.	1	
		----*----		
- 17	34-184326	. BRACKET,CABIN FLOOR CHANNEL PULLEY LH	1	
	34-184326-1	. BRACKET,CABIN FLOOR CHANNEL PULLEY RH	1	
		/ATTACHING PARTS/		
- 18	AN515-8-7	. SCREW	5	
		----*----		
- 19	18743	. BRACKET,RUDDER REDUCTION PULLEY	2	
- 20	AN210-4B	. PULLEY.	2	
		/ATTACHING PARTS/		
- 21	187059/M/	. BOLT,RUDDER REDUCTION PULLEY ATTACHING.	1	
	AN960-416	. WASHER.	2	
	100951-S-063-009-020	. WASHER.	2	A-2
- 22	100801-X6-0094	. BUSHING	2	
	AN960-416L	. WASHER.	2	
	AN320-4	. NUT	2	
	AN380-2-2	. PIN,COTTER.	2	
		----*----		
- 23	894-187231	. CABLE ASSY,RUDDER BALANCE	1	A-13
	694-187232	. CABLE ASSY,RUDDER BALANCE	1	A-14
		/ATTACHING PARTS/		
- 24	AN23-11/M/	. BOLT.	1	
	AN960-10	. WASHER.	1	
	AN310-3	. NUT	1	
	AN380-2-2	. PIN,COTTER.	1	
		----*----		

FIG. & INDEX NO.	PART NO.	DESCRIPTION 1 2 3 4 5 6 7	UNITS PER ASSY	USABLE ON CODE
63 - 25	NAS134-37-0240	. . CABLE ASSY.	1	
- 26	AN155-32S	. . BARREL.	1	
- 27	404-187231-2	. . TURNBUCKLE.	1	
- 28	AN210-3B	. PULLEY.	2	
		/ATTACHING PARTS/		
- 29	AN4-11	. BOLT.	1	
	AN310-4	. NUT	1	
	AN380-2-2	. PIN,COTTER.	1	
		----*----		
- 30	404-187011	. CABLE ASSY,LONG RUDDER.	2	
		/ATTACHING PARTS/		
- 31	AN3-5/M/	. BOLT.	1	
	AN960-10	. WASHER.	1	
	AN310-3	. NUT	1	
	AN380-2-2	. PIN,COTTER.	1	
		----*----		
- 32	AN161-22RS	. . FORK.	1	
- 33	AN155-32S	. . BARREL.	2	
- 34	NAS304-45-3464	. . CABLE ASSY,RUDDER	1	
	404-187011-2	. . CABLE ASSY,/SEE FIG. 9/	REF	
- 35	AN210-3B	. PULLEY.	4	
		/ATTACHING PARTS/		
- 36	S-126-20/M/	. BOLT.	1	
	AN960-416L	. WASHER.	1	
	AN320-4	. NUT	1	
	AN380-2-2	. PIN,COTTER.	1	
		----*----		
- 37	AN210-3B	. PULLEY.	2	
		/ATTACHING PARTS/		
- 38	AN4-11/M/	. BOLT.	1	
	AN960-416	. WASHER.	1	
	AN310-4	. NUT	1	
	AN380-2-2	. PIN,COTTER.	1	
		----*----		
- 38	894-187016	. CABLE ASSY,RUDDER SERVO LH.	1	A-1,B
- 40	894-187013	. CABLE ASSY,RUDDER SERVO RH.	1	A-1,B
		/ATTACHING PARTS/		
- 41	AN3-6/M/	. BOLT.	1	
	AN960-10	. WASHER.	1	
	AN310-3	. NUT	1	
	AN380-2-2	. PIN,COTTER.	1	
		----*----		
- 42	794-187021	. BARREL ASSY,SERVO ROD GUIDE	1	A-1,B
- 43	AN155-32S	. BARREL.	1	A-1,B
- 44	794-187025	. GUARD,SERVO PULLEY UPPER LH	1	A-1,B
	794-187025-1	. GUARD,SERVO PULLEY UPPER RH	1	A-1,B
- 45	AN210-4B	. PULLEY.	2	A-1,B
		/ATTACHING PARTS/		
- 46	AN4-16/M/	. BOLT.	1	
	AN960-416L	. WASHER.	1	
	AN310-4	. NUT	1	
	AN380-2-2	. PIN,COTTER.	1	
		----*----		
- 47	AN210-4B	. PULLEY.	2	A-1,B
		/ATTACHING PARTS/		
- 48	AN4-10/M/	. BOLT.	1	
	AN960-416	. WASHER.	1	
	AN310-4	. NUT	1	
	AN380-2-2	. PIN,COTTER.	1	
		----*----		

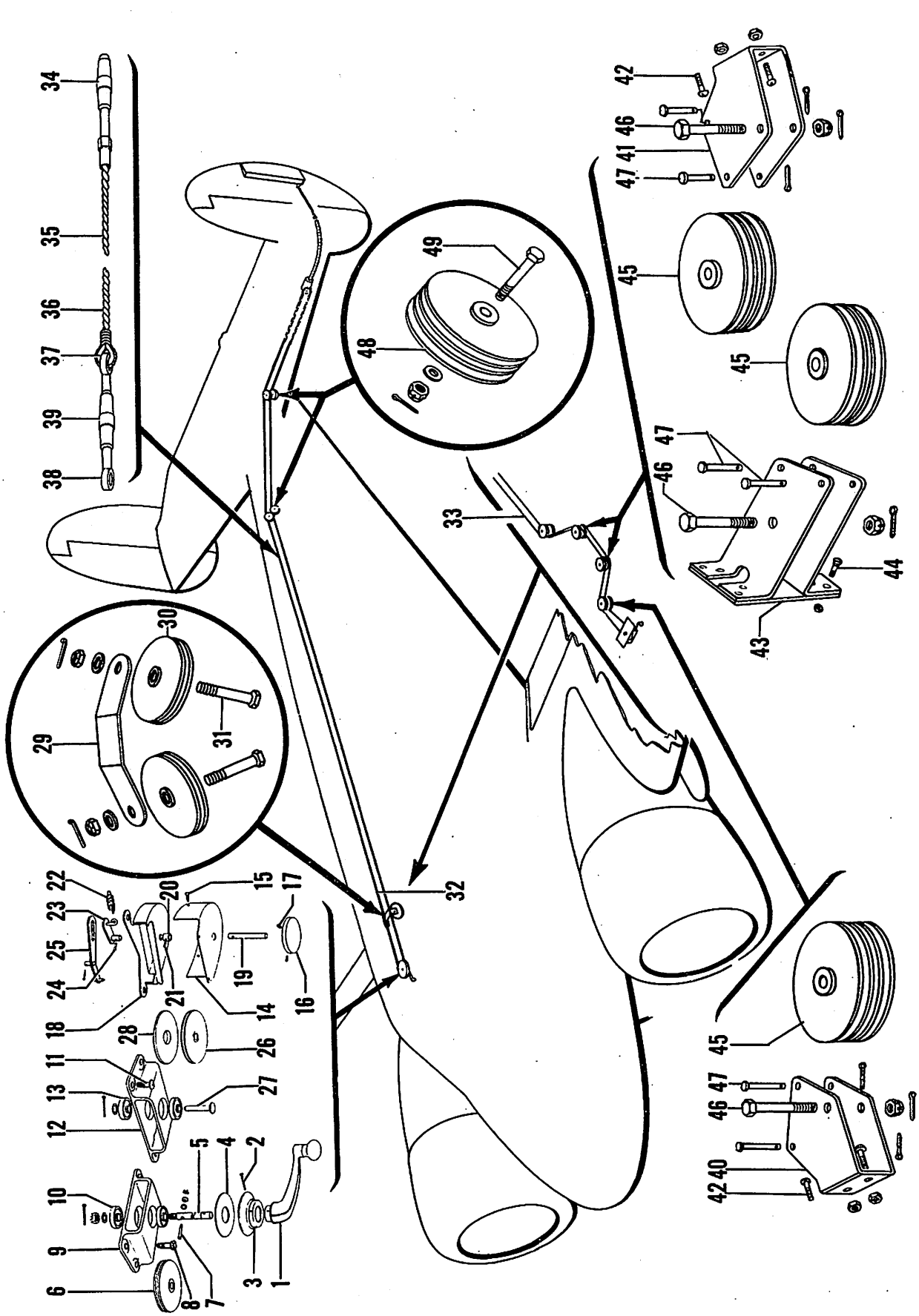

Figure 64. Rudder Tab and Indicator Installation

FIG. & INDEX NO.	PART NO.	DESCRIPTION 1 2 3 4 5 6 7	UNITS PER ASSY	USABLE ON CODE
64	694-187000	CONTROL INSTL,FLIGHT /SEE FIG. 1 FOR NHA/	REF	A-1
	694-187001	CONTROL INSTL,FLIGHT /SEE FIG. 1 FOR NHA/	REF	B
	694-187003	CONTROL INSTL,FLIGHT /SEE FIG. 1 FOR NHA/	REF	A-2
	694-187730	. CONTROL INSTL,RUDDER TAB.	1	
- 1	68-702780-C	. . HANDLE,RUDDER TAB CONTROL /88692/	1	
		/ATTACHING PARTS/		
- 2	102809-125-020	. . PIN	1	
		----*----		
- 3	1	. . ESCUTCHEON,RUDDER TAB HANDLE /72343/	1	
- 4	694-187732	. . SPACER,RUDDER TAB CONTROL	1	
- 5	694-187731	. . SHAFT,TAB CONTROL CRANK	1	
		/ATTACHING PARTS/		
	AN310-3	. . NUT	1	
	AN960-10L	. . WASHER.	1	
	AN380-2-2	. . PIN,COTTER.	1	
		----*----		
- 6	187732	. . PULLEY,TAB CONTROL CRANK.	1	
		/ATTACHING PARTS/		
- 7	187827	. . PIN	1	
	AN960-3	. . WASHER.	1	
	AN936A3	. . WASHER,LOCK	1	
	AN340-3	. . NUT	1	
		----*----		
	187803	. . HOUSING ASSY,RUDDER TAB CRANK	1	
		/ATTACHING PARTS/		
- 8	AN526-832-8	. . SCREW	4	
		----*----		
- 9	187803-1	. . . HOUSING,RUDDER TAB CRANK.	1	
- 10	KP6A	. . . BEARING,/21335/	2	
	404-180107	. . PLACARD,RUDDER TAB CONTROL.	1	
	694-187728	. INDICATOR INSTL,RUDDER TAB.	1	A-1,B
	694-187729	. INDICATOR INSTL,RUDDER TAB.	1	A-2
	407-187803	. . HOUSING ASSY,RUDDER TAB INDICATOR	1	
		/ATTACHING PARTS/		
- 11	AN526-832-8	. . SCREW	4	
	AN960-8	. . WASHER.	2	
		----*----		
- 12	407-187803-2	. . . HOUSING,RUDDER INDICATOR.	1	
- 13	K6A	. . . BEARING,/21335/	2	
- 14	694-187744	. . COVER ASSY,RUDDER TAB INDICATOR	1	
		/ATTACHING PARTS/		
- 15	AN530-6R6	. . SCREW	4	
		----*----		
- 16	407-187732-2	. . DIAL ASSY,REMOVABLE TAB	1	
		/ATTACHING PARTS/		
- 17	AN565B4H3	. . SCREW	2	
		----*----		
	404-187739	. . INDICATOR ASSY,RUDDER TAB	1	A-1,B
	404-187719	. . INDICATOR ASSY,RUDDER TAB	1	A-2
- 18	404-187733	. . . COVER ASSY,RUDDER TAB INDICATOR	1	A-1,B
- 19	404-187739-4	. . . SHAFT,RUDDER TAB INDICATOR.	1	A-1,B
	404-187723	. . . SHAFT,RUDDER TAB INDICATOR.	1	A-2
		/ATTACHING PARTS/		
- 20	404-187739-6	. . . BUSHING	1	A-1,B
	404-187725	. . . BUSHING	1	A-2
- 21	AN565B4H3	. . . SCREW	1	
		----*----		
- 22	100942-010-006-033-17	. . . SPRING.	1	A-1,B
	AN380-1-1	. . . PIN,COTTER.	1	A-1,B
- 23	404-187731-2	. . . LINK ASSY,RUDDER TAB INDICATOR DIAL	1	A-1,B
		/ATTACHING PARTS/		
- 24	404-187739-2	. . . PIN	1	
		----*----		

FIG. & INDEX NO.	PART NO.	DESCRIPTION 1 2 3 4 5 6 7	UNITS PER ASSY	USABLE ON CODE
64 - 25	404-187727	. . . LINK ASSY,RUDDER TAB INDICATOR.	1	A-1,B
		/ATTACHING PARTS/		
	AN960-4	. . . WASHER.	2	
	AN380-1-1	. . . PIN,COTTER.	1	
		----*----		
	404-187724	. . . GEAR,PINION	1	A-2
		/ATTACHING PARTS/		
	AN960-10L	. . . WASHER.	1	
	AN364-1032	. . . NUT	1	
		----*----		
	404-187722	. . . GEAR,PINION	1	A-2
		/ATTACHING PARTS/		
	AN23-9A	. . . BOLT,CLEVIS	1	
	AN960-10	. . . WASHER.	1	
	AN365-1032	. . . NUT	1	
		----*----		
	404-187720	. . . PLATE,RUDDER TAB INDICATOR.	1	A-2
		/ATTACHING PARTS/		
	AN505-8R6	. . . SCREW	2	
	AN960-8	. . . WASHER.	2	
	AN365-832	. . . NUT	2	
		----*----		
- 26	187732	. . PULLEY,RUDDER TAB INDICATOR	1	
		/ATTACHING PARTS/		
- 27	AN396-37	. . PIN,TAPER	1	A-1,B
	AN960-616L	. . WASHER.	1	A-1,B
	AN380-3-3	. . PIN,COTTER.	1	A-1,B
	404-187721	. . SHAFT,RUDDER TAB INDICATOR.	1	A-2
	AN960-616	. . WASHER.	1	A-2
	AN365-1032	. . NUT	1	A-2
		----*----		
- 28	404-187730	. . ACTUATOR,RUDDER TAB INDICATOR SPIRAL. . . .	1	A-1,B
- 29	18405-29	. REINFORCEMENT,RUDDER TAB BRACKET.	1	A
- 30	AN210-1B	. PULLEY.	2	A
		/ATTACHING PARTS/		
- 31	AN3-7	. BOLT.	1	
	AN960-10	. WASHER.	1	
	AN310-3	. NUT	1	
	AN380-2-2	. PIN,COTTER.	1	
		----*----		
- 32	187111-18	. CABLE ASSY,RUDDER TAB	1	A
- 33	187111-14	. CABLE ASSY,RUDDER TAB	1	B
	187111-2	. . CABLE ASSY,RUDDER TAB /SEE FIG. 9/.	1	
	187111-6	. . CHAIN ASSY,RUDDER TAB /SEE FIG. 9/.	1	
	102809-A078-012	. . PIN,/SEE FIG. 9/.	2	
- 34	AN155-16S	. . BARREL.	1	
- 35	106201-R-43002	. . CABLE ASSY,RUDDER TAB	1	A
- 36	106201-R-44300	. . CABLE ASSY,RUDDER TAB	1	B
- 37	AN100-3	. THIMBLE	2	B
- 38	AN170-16RS	. EYE	2	B
- 39	AN155-16S	. BARREL.	2	
- 40	84-187023	. BRACKET,RUDDER TAB PULLEY FRONT	1	B
- 41	84-187019	. BRACKET,RUDDER TAB PULLEY REAR.	1	B
		/ATTACHING PARTS/		
- 42	AN515-8R8	. SCREW	1	
	AN515-8R7	. SCREW	1	
	AN365-832	. NUT	1	
		----*----		
- 43	84-187018	. BRACKET ASSY,RUDDER TAB TURRET PULLEY LH. . .	1	B
	84-187018-1	. BRACKET ASSY,RUDDER TAB TURRET PULLEY RH. . .	1	B
		/ATTACHING PARTS/		
- 44	AN507-8R7	. SCREW	2	
	AN365-832	. NUT	2	
		----*----		

FIG. & INDEX NO.	PART NO.	DESCRIPTION 1 2 3 4 5 6 7	UNITS PER ASSY	USABLE ON CODE
64 - 45	AN210-2B	. PULLEY.	8	B
		/ATTACHING PARTS/		
- 46	AN4-16/M/	. BOLT.	1	
	AN365-832	. NUT	1	
		----*----		
- 47	AN392-23	. PIN	8	B
	AN380-2-2	. PIN,COTTER.	12	B
- 48	AN210-2B	. PULLEY.	1	
		/ATTACHING PARTS/		
- 49	AN3-11	. BOLT.	1	
	AN960-10	. WASHER.	1	
	AN310-3	. NUT	1	
	AN380-2-2	. PIN,COTTER.	1	
		----*----		

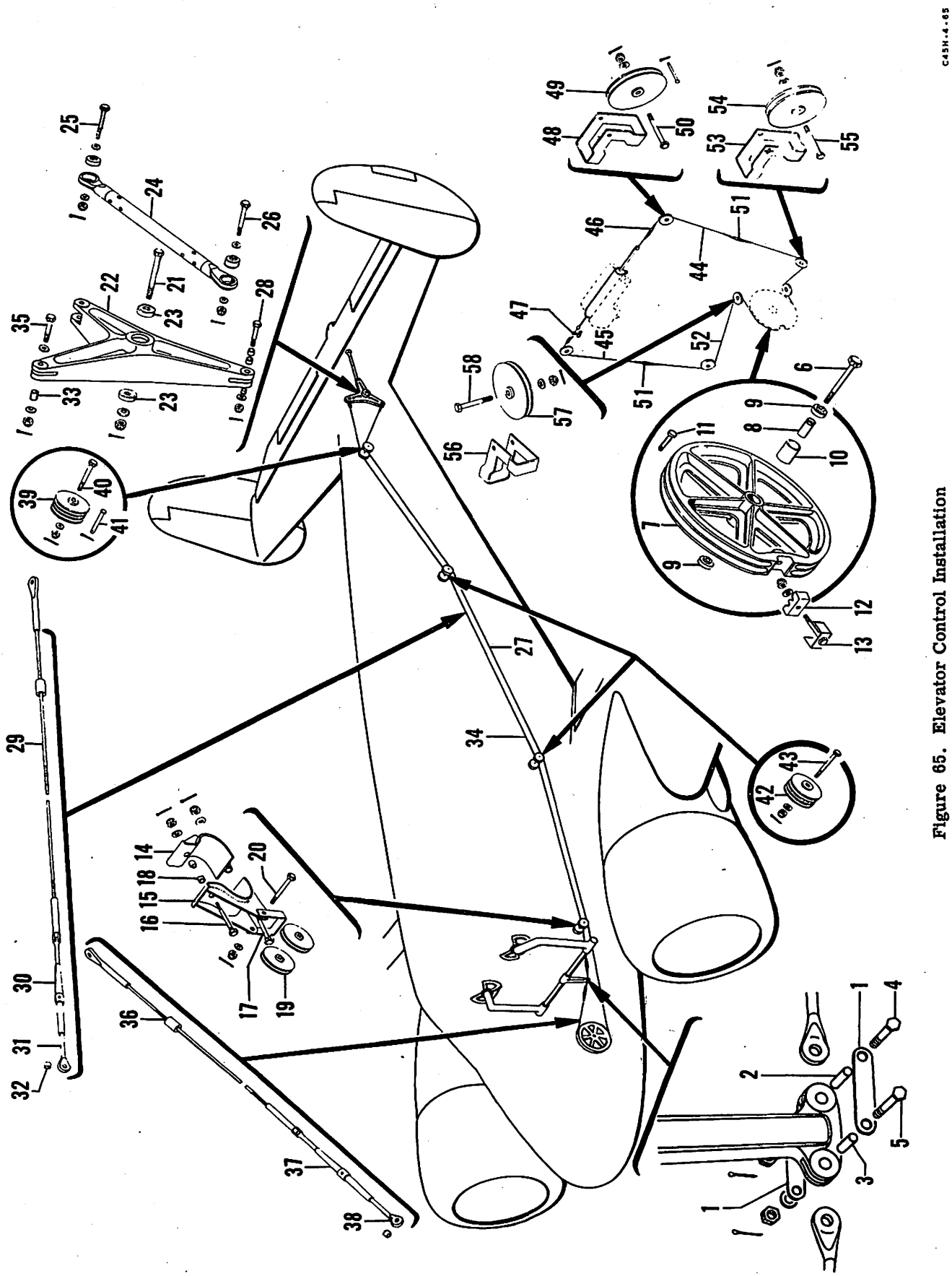

Figure 65. Elevator Control Installation

FIG. & INDEX NO.	PART NO.	DESCRIPTION 1 2 3 4 5 6 7	UNITS PER ASSY	USABLE ON CODE
65	694-187000	CONTROL INSTL,FLIGHT /SEE FIG. 1 FOR NHA/	REF	A-1
	694-187001	CONTROL INSTL,FLIGHT /SEE FIG. 1 FOR NHA/	REF	B
	694-187003	CONTROL INSTL,FLIGHT /SEE FIG. 1 FOR NHA/	REF	A-2
- 1	187517	. PLATE,CONTROL ARM SIDE.	2	
- 2	804-187501	. BUSHING,CONTROL ARM SIDE.	1	
- 3	804-187502	. BUSHING,CONTROL ARM SIDE.	1	
		/ATTACHING PARTS/		
- 4	AN3-13/M/	. BOLT.	1	
- 5	AN4-13/M/	. BOLT.	1	
	AN960-416	. WASHER.	1	
	AN960-10	. WASHER.	1	
	AN310-3	. NUT	1	
	AN310-4	. NUT	1	
	AN380-2-2	. PIN,COTTER.	2	
		----*----		
	814-187282	. PULLEY ASSY,ELEVATOR.	1	
		/ATTACHING PARTS/		
- 6	AN4-24/M/	. BOLT.	1	
	AN960-416	. WASHER.	1	
	AN310-4	. NUT	1	
		----*----		
- 7	814-187282-2	. . WHEEL,PULLEY CASTING.	1	
- 8	187202	. . SPACER,ELEVATOR PULLEY CONTROL.	1	
- 9	K4	. . BEARING,/21335/	2	
- 10	814-187281	. . SPACER,ELEVATOR PULLEY.	1	
- 11	AN392-63	. PIN	1	
	AN380-2-2	. PIN,COTTER.	1	
- 12	814-187283	. CLAMP,ELEVATOR SERVO CABLE.	1	A-1,B
		/ATTACHING PARTS/		
- 13	694-187002	. CLIP ASSY	1	
	AN960-416	. WASHER.	1	
	AN365-428	. NUT	1	
		----*----		
- 14	187171-4	. BRACKET,PULLEY WELD ASSY.	1	
- 15	187171-1	. BRACKET,PULLEY WELD ASSY.	1	
		/ATTACHING PARTS/		
- 16	AN4-17	. BOLT.	1	
- 17	AN4-22	. BOLT.	1	
	AN310-4	. NUT	2	
	AN380-2-2	. PIN,COTTER.	2	
		----*----		
- 18	187172	. BUSHING,PULLEY BRACKET.	2	
- 19	AN210-3B	. PULLEY.	2	
		/ATTACHING PARTS/		
- 20	AN4-15	. BOLT.	1	
	AN960-416	. WASHER.	1	
	AN310-4	. NUT	1	
	AN380-2-2	. PIN,COTTER.	1	
		----*----		
	186138	. BELLCRANK ASSY,ELEVATOR	1	
		/ATTACHING PARTS/		
- 21	AN4-26/M/	. BOLT.	1	
	AN960-416	. WASHER.	1	
	AN310-4	. NUT	1	
	AN380-2-2	. PIN,COTTER.	1	
		----*----		
- 22	186138-1	. . BELLCRANK,CASTING	1	
- 23	K4	. . BEARING,/21335/	2	
- 24	186160-2	. LINK ASSY,TAIL SURFACE CONTROL.	1	
		/ATTACHING PARTS/		
- 25	AN4-14/M/	. BOLT.	1	
- 26	AN4-15/M/	. BOLT.	1	
	AN310-4	. NUT	1	
	AN960-416	. WASHER.	1	
	AN380-2-2	. PIN,COTTER.	1	
		----*----		

FIG. & INDEX NO.	PART NO.	DESCRIPTION 1 2 3 4 5 6 7	UNITS PER ASSY	USABLE ON CODE
65 - 27	187097	• CABLE ASSY,ELEVATOR LONG	1	
		/ATTACHING PARTS/		
- 28	AN3-11/M/	• BOLT	1	
	AN310-3	• NUT	1	
	AN960-10	• WASHER	1	
	AN380-2-2	• PIN,COTTER	1	
		----*----		
- 29	187097-1	• • CABLE,ELEVATOR LONG	1	
- 30	AN155-32L	• • BARREL,TURNBUCKLE	1	
- 31	187097-3	• • EYE,CABLE	1	
- 32	187022	• BUSHING,CABLE EYE	1	
- 33	187021	• BUSHING,CABLE EYE	1	
- 34	187096	• CABLE ASSY,ELEVATOR SHORT	1	
		/ATTACHING PARTS/		
- 35	AN4-12/M/	• BOLT	1	
	AN960-10	• WASHER	1	
	AN310-4	• NUT	1	
	AN380-2-2	• PIN,COTTER	1	
		----*----		
- 36	187096-1	• • CABLE ASSY,ELEVATOR SHORT	1	
- 37	AN155-46L	• • BARREL,TURNBUCKLE	1	
- 38	187096-3	• • EYE,CABLE	1	
- 39	AN210-3B	• PULLEY	2	
		/ATTACHING PARTS/		
- 40	AN4-15/M/	• BOLT	1	
	AN960-416	• WASHER	1	
	AN310-4	• NUT	1	
	AN380-2-2	• PIN,COTTER	2	
		----*----		
- 41	AN392-37	• PIN	1	
	AN380-2-2	• PIN,COTTER	1	
- 42	AN210-3B	• PULLEY	2	
		/ATTACHING PARTS/		
- 43	S-126-36	• BOLT	1	
	100951-S-032-008-016	• WASHER	1	
	AN320-4	• NUT	1	
	AN380-2-2	• PIN,COTTER	1	
		----*----		
- 44	NAS304-77-0221	• CABLE ASSY,LH	1	A-1,B
- 45	NAS304-77-0236	• CABLE ASSY,RH	1	A-1,B
- 46	794-187021	• BARREL ASSY,SERVO ROD GUIDE	1	A-1,B
- 47	AN155-32S	• BARREL	1	A-1,B
- 48	794-187025	• GUARD,SERVO PULLEY UPPER LH	1	A-1,B
	794-187025-1	• GUARD,SERVO PULLEY UPPER RH	1	A-1,B
- 49	AN210-4B	• PULLEY	2	A-1,B
		/ATTACHING PARTS/		
- 50	AN4-16/M/	• BOLT	1	
	AN960-416L	• WASHER	1	
	AN310-4	• NUT	1	
	AN380-2-2	• PIN,COTTER	1	
		----*----		
- 51	AN155-32S	• BARREL	1	A-1,B
- 52	NAS304-66-0874	• CABLE ASSY	1	A-1,B
	794-187071	• GUARD,SERVO PULLEY LOWER LH	1	A-1,B
- 53	794-187011	• GUARD,SERVO PULLEY LOWER RH	1	A-1,B
- 54	AN210-3B	• PULLEY	2	A-1,B
		/ATTACHING PARTS/		
- 55	AN4-20/M/	• BOLT	1	
	AN960-416	• WASHER	1	
	AN310-4	• NUT	1	
	AN380-2-2	• PIN,COTTER	1	
		----*----		

FIG. & INDEX NO.	PART NO.	DESCRIPTION 1 2 3 4 5 6 7	UNITS PER ASSY	USABLE ON CODE
65 - 56	814-187014	. GUARD,SERVO PULLEY UPPER.	1	A-1,B
	824-187015	. GUARD,SERVO SHELF	1	A-1,B
- 57	AN210-4B	. PULLEY.	2	A-1,B
		/ATTACHING PARTS/		
- 58	AN4-17/M/	. BOLT.	1	
	AN960-416	. WASHER.	1	
	AN310-4	. NUT	1	
	AN380-2-2	. PIN,COTTER.	1	
		----*----		

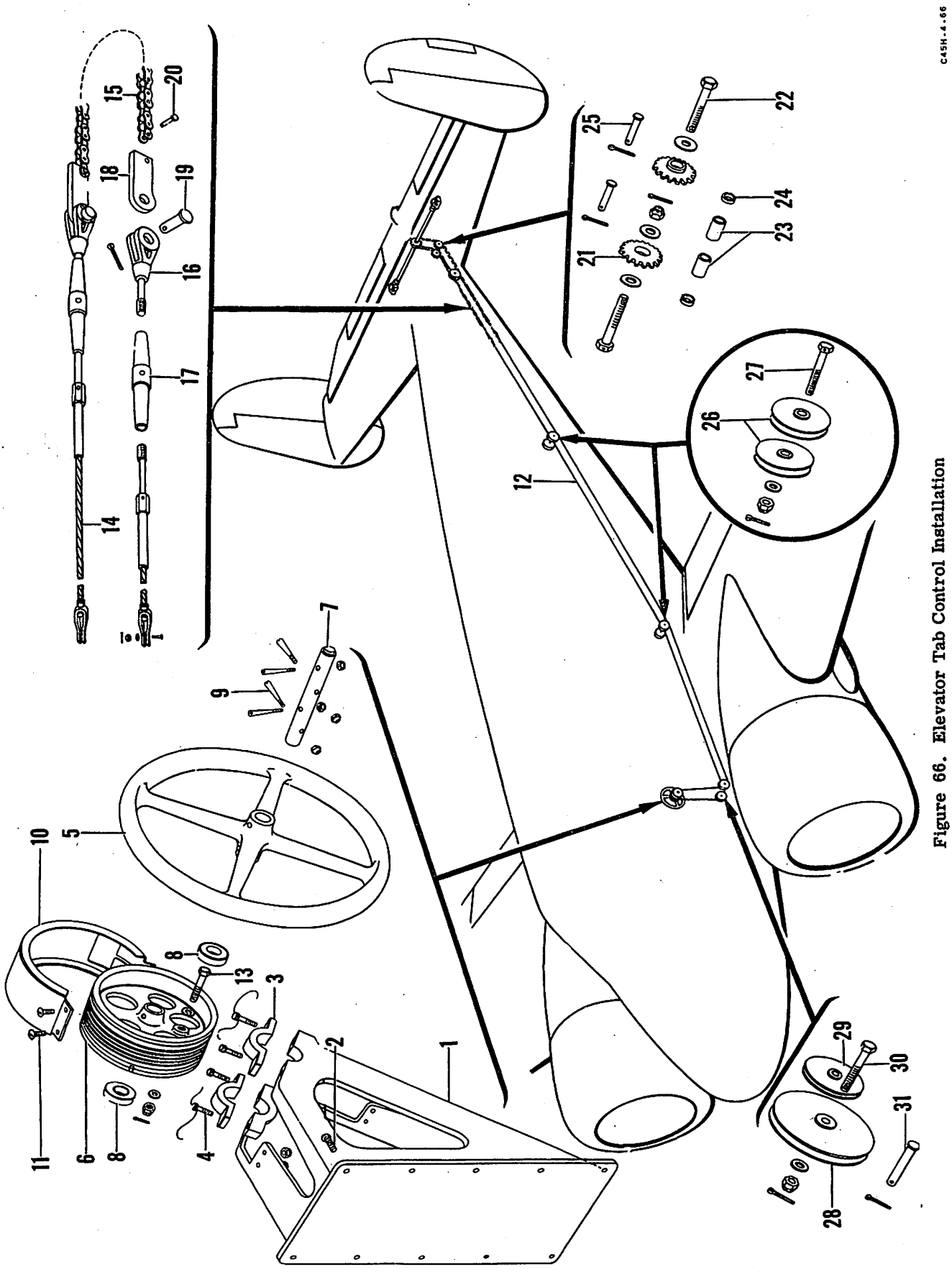

Figure 66. Elevator Tab Control Installation

FIG. & INDEX NO.	PART NO.	DESCRIPTION 1 2 3 4 5 6 7	UNITS PER ASSY	USABLE ON CODE
66	694-187000	CONTROL INSTL,FLIGHT /SEE FIG. 1 FOR NHA/	REF	A-1
	694-187001	CONTROL INSTL,FLIGHT /SEE FIG. 1 FOR NHA/	REF	B
	694-187003	CONTROL INSTL,FLIGHT /SEE FIG. 1 FOR NHA/	REF	A-2
	187600	. CONTROL ASSY,ELEVATOR TAB	1	
- 1	187601-1	. . BRACKET,ELEVATOR TAB CONTROL WHEEL	1	
		/ATTACHING PARTS/		
- 2	AN526-832-12	. . SCREW	10	
		----*----		
- 3	187601-2	. . CAP,ELEVATOR TAB CONTROL BRACKET	2	
		/ATTACHING PARTS/		
- 4	AN500A10-12	. . SCREW	2	
		----*----		
	187602	. . SHAFT ASSY,ELEVATOR TAB CONTROL	1	
- 5	18761	. . . WHEEL,ELEVATOR TAB CONTROL	1	
- 6	187717A	. . . SHEAVE,ELEVATOR TAB CABLE	1	
- 7	187603	. . . SHAFT,ELEVATOR TAB CONTROL WHEEL	1	
- 8	AN201KP6A	. . . BEARING	2	
- 9	187714-3	. . . PIN	4	
	AN365-632	. . . NUT	4	
- 10	187604	. . GUARD,ELEVATOR TAB CABLE SHEAVE	1	
		/ATTACHING PARTS/		
- 11	AN526-632-6	. . SCREW	4	
	AN365-632	. . NUT	4	
		----*----		
- 12	187156	. CABLE ASSY,ELEVATOR TAB CONTROL	1	A-26,B
	187156-10	. CABLE ASSY,ELEVATOR TAB CONTROL	1	A-27
		/ATTACHING PARTS/		
- 13	AN3-6	. BOLT	1	
	AN960-10	. WASHER	1	
	AN310-3	. NUT	1	
	AN380-2-2	. PIN,COTTER	1	
		----*----		
- 14	187156-2	. . CABLE ASSY,ELEVATOR TAB CONTROL	1	A-26,B
	187156-6	. . CABLE ASSY,ELEVATOR TAB CONTROL	1	A-27
- 15	187156-4	. . CHAIN,ELEVATOR TAB CONTROL	1	A-26,B
	187156-8	. . CHAIN,ELEVATOR TAB CONTROL	1	A-27
- 16	AN161-16RS	. . FORK	1	
- 17	AN155-16S	. . BARREL	1	
- 18	187108	. . LINK,ELEVATOR TAB CABLE STOP	1	
- 19	AN393-11	. . PIN	1	
	AN380-2-2	. . PIN,COTTER	1	
- 20	102809-A078-012	. . PIN	1	
- 21	187735-2	. SPROCKET	2	
		/ATTACHING PARTS/		
- 22	AN4-11	. BOLT	1	
- 23	187736-1	. BUSHING	1	
- 24	187736-2	. SPACER	1	
	AN960-416	. WASHER	1	
	AN960-416L	. WASHER	1	
	AN310-4	. NUT	1	
	AN380-2-2	. PIN,COTTER	1	
		----*----		
- 25	AN392-21	. PIN	2	
	AN380-2-2	. PIN,COTTER	2	
- 26	AN210-1B	. PULLEY	4	
		/ATTACHING PARTS/		
- 27	AN3-11	. BOLT	1	
	AN960-10	. WASHER	1	
	AN310-3	. NUT	1	
	AN380-2-2	. PIN,COTTER	1	
		----*----		

FIG. & INDEX NO.	PART NO.	DESCRIPTION 1 2 3 4 5 6 7	UNITS PER ASSY	USABLE ON CODE
66 - 28	AN210-2B	. PULLEY.	2	
- 29	AN210-1B	. PULLEY.	2	
		/ATTACHING PARTS/		
- 30	AN3-11	. BOLT.	1	
	AN960-10	. WASHER.	1	
	AN310-3	. NUT	1	
	AN380-2-2	. PIN,COTTER.	1	
		----*----		
- 31	AN392-23	. PIN	2	
	AN380-2-2	. PIN,COTTER.	2	

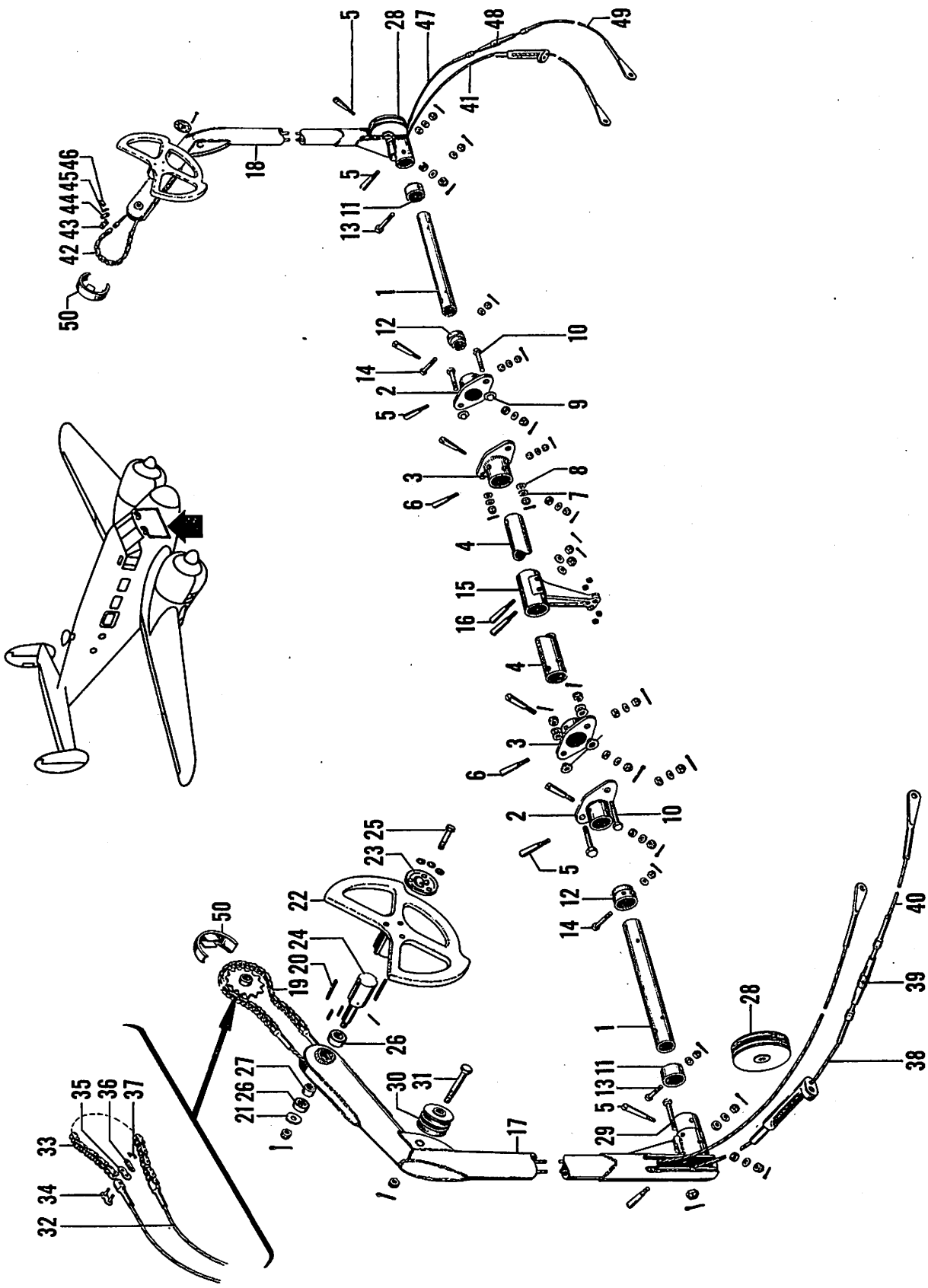

Figure 67. Torque Shaft and Control Column Assembly

FIG. & INDEX NO.	PART NO.	DESCRIPTION 1 2 3 4 5 6 7	UNITS PER ASSY	USABLE ON CODE
67	734-187500	COLUMN ASSY,TORQUE SHAFT & CONTROL. . . . . /SEE FIG. 61 FOR NHA/	REF	A-1,B
	894-187500	COLUMN ASSY,TORQUE SHAFT & CONTROL. . . . . /SEE FIG. 61 FOR NHA/	REF	A-2
- 1	187507	. SHAFT,TORQUE CONTROL COLUMN SIDE.	2	
- 2	187511	. FLANGE,TORQUE SHAFT OUTER	2	
- 3	187512	. FLANGE,TORQUE SHAFT INNER	2	
- 4	187506	. SHAFT,CONTROL COLUMN CENTER TORQUE. . . . . /ATTACHING PARTS/	1	
- 5	AN386-5-15	. PIN	8	
- 6	AN386-5-16	. PIN	4	
	AN960-616	. WASHER.	16	
	AN975-6	. WASHER.	12	
- 7	AN960-616	. WASHER.	4	
- 8	187515	. WASHER,TORQUE SHAFT FLANGE RUBBER	4	
- 9	187513	. BUSHING,TORQUE SHAFT FLANGE	4	
- 10	AN6-11	. BOLT.	4	
	AN310-6	. NUT	4	
	AN320-6	. NUT	8	
	AN380-3-3	. PIN,COTTER. . . . . ----*----	12	
- 11	187516	. COLLAR,TORQUE SHAFT OUTER	2	
- 12	187508	. BUSHING,TORQUE SHAFT CONTROL COLUMN THRUST. . /ATTACHING PARTS/	2	
- 13	AN3-23	. BOLT.	1	
- 14	AN3-22	. BOLT.	1	
	AN960-10	. WASHER.	2	
	AN310-3	. NUT . . . . . ----*----	2	
- 15	804-187504	. ARM ASSY,CONTROL COLUMN ELEVATOR. . . . . /ATTACHING PARTS/	1	
- 16	AN386-5-18	. PIN	2	
	AN975-6	. WASHER.	2	
	AN320-6	. NUT	2	
	AN380-3-3	. PIN,COTTER. . . . . ----*----	2	
	734-187510	. COLUMN ASSY,ELEVATOR CONTROL LH	1	
	734-187510-1	. COLUMN ASSY,ELEVATOR CONTROL RH	1	
- 17	824-187510-26	. . WELD ASSY,CONTROL COLUMN LH	1	
- 18	824-187510-27	. . WELD ASSY,CONTROL COLUMN RH	1	
- 19	188564	. . SPROCKET,CONTROL COLUMN	1	
	734-187523	. . WHEEL ASSY,CONTROL. . . . . /ATTACHING PARTS/	1	
- 20	S-21-3	. . KEY	1	
- 21	100951-X-063-008-024	. . WASHER.	1	
	AN320-4	. . NUT	1	
	AN380-2-2	. . PIN,COTTER. . . . . ----*----	1	
- 22	734-187523-2	. . . WHEEL	1	
- 23	734-187521	. . . PLATE,CONTROL WHEEL	1	
- 24	187522	. . . HUB ASSY,CONTROL. . . . . /ATTACHING PARTS/	1	
- 25	S-74-15A	. . . BOLT.	3	
	AN960A416	. . . WASHER.	3	
	AN365-428	. . . NUT . . . . . ----*----	3	
- 26	AN201KP8A	. . BEARING	2	
- 27	894-187510-12	. . TUBE.	1	
- 28	18754-2	. . PULLEY. . . . . /ATTACHING PARTS/	1	
- 29	AN4-37/M/	. . BOLT.	1	
	AN960-416	. . WASHER.	1	
	404-187512	. . CLIP.	1	
	AN310-4	. . NUT	1	
	AN380-2-2	. . PIN,COTTER. . . . . ----*----	1	

FIG. & INDEX NO.	PART NO.	DESCRIPTION 1 2 3 4 5 6 7	UNITS PER ASSY	USABLE ON CODE
67 - 30	BB-128	. . PULLEY,/80251/.	2	
		/ATTACHING PARTS/		
- 31	AN24-27/M/	. . BOLT.	1	
	AN320-4	. . NUT	1	
	AN380-2-2	. . PIN,COTTER.	1	
		----*----		
	894-187032	. CABLE ASSY,AILERON CONTROL COLUMN LH. . . .	1	A-1,B
	404-187032	. CABLE ASSY,AILERON CONTROL COLUMN LH. . . .	1	A-2
- 32	894-187032-6	. . CABLE ASSY,AILERON CONTROL COLUMN LH. . .	1	A-1,B
	404-187032-6	. . CABLE ASSY,AILERON CONTROL COLUMN LH. . .	1	A-2
- 33	894-187032-10	. . CHAIN	1	A-1,B
	404-187032-10	. . CHAIN	1	A-2
- 34	M4282	. . PLATE,LINK /72625/.	2	
- 35	1882	. . PLATE,COVER /72625/	2	
- 36	6082	. . SPRING,LOCK /72625/	2	
- 37	S-34-2	. . CLIP.	2	
- 38	894-187032-4	. . CABLE ASSY,AILERON CONTROL COLUMN	1	A-1,B
	404-187032-4	. . CABLE ASSY,AILERON CONTROL COLUMN	1	A-2
- 39	AN155-32S	. . BARREL.	1	
- 40	NAS304-37-0133	. . CABLE ASSY.	1	
	894-187033	. CABLE ASSY,AILERON CONTROL COLUMN RH. . . .	1	A-1,B
	404-187033	. CABLE ASSY,AILERON CONTROL COLUMN RH. . . .	1	A-2
- 41	894-187033-6	. . CABLE ASSY,AILERON CONTROL COLUMN RH. . .	1	A-1,B
	404-187033-6	. . CABLE ASSY,AILERON CONTROL COLUMN RH. . .	1	A-2
- 42	894-187033-10	. . CHAIN	1	A-1,B
	404-187033-10	. . CHAIN	1	A-2
- 43	M4282	. . PLATE,LINK /72625/.	2	
- 44	1882	. . PLATE,COVER /72625/	2	
- 45	6082	. . SPRING,LOCK /72625/	2	
- 46	S-34-2	. . CLIP.	2	
- 47	894-187033-4	. . CABLE ASSY.	1	A-1,B
	404-187033-4	. . CABLE ASSY.	1	A-2
- 48	AN155-32S	. . BARREL.	2	
- 49	NAS304-37-0133	. . CABLE ASSY.	2	
- 50	404-187511	COVER ASSY,ELEVATOR CONTROL COLUMN CHAIN. . .	REF	
		/SEE FIG. 99 FOR NHA/		

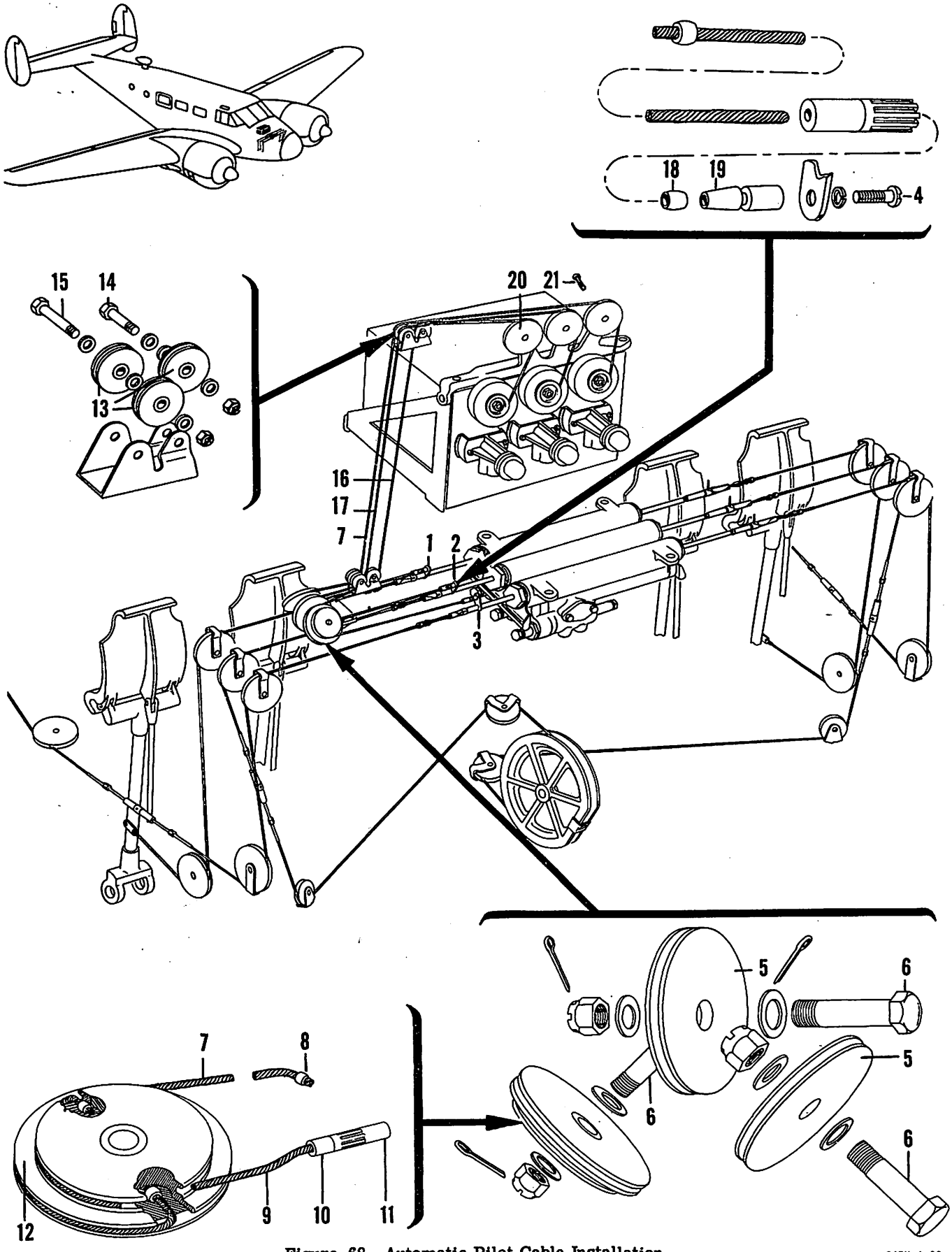

Figure 68. Automatic Pilot Cable Installation

FIG. & INDEX NO.	PART NO.	DESCRIPTION 1 2 3 4 5 6 7	UNITS PER ASSY	USABLE ON CODE
68	894-187050	CABLE INSTL,AUTO PILOT /SEE FIG. 61 FOR NHA/	REF	A-1,B
- 1	794-187022-4	. LUG	1	A-1,B
- 2	794-187022-2	. LUG	1	A-1,B
- 3	794-187022-6	. LUG	1	A-1,B
		/ATTACHING PARTS/		
- 4	AN526-1032-8	. SCREW	1	
	AN935-10	. WASHER	1	
		----*----		
- 5	AN210-2A	. PULLEY	2	A-1,B
	894-187297	. PULLEY ASSY,AUTO PILOT FOLLOW UP	1	A-1,B
		/ATTACHING PARTS/		
- 6	S-124-24	. BOLT	1	
	AN960-10L	. WASHER	1	
	AN320-3	. NUT	1	
	AN380-2-2	. PIN,COTTER	1	
		----*----		
- 7	794-187051-22	. . CABLE ASSY	1	A-1,B
- 8	RA2487-2	. . FITTING,/80097/	2	A-1,B
- 9	794-187051-4	. . CABLE ASSY	1	A-1,B
- 10	814-187023	. . SNAP,FOLLOW UP CABLE SHEAR LINK	1	A-1,B
- 11	814-187022	. . PLUG,FOLLOW UP CABLE SHEAR LINK	1	A-1,B
- 12	814-187284	. . PULLEY ASSY,FOLLOW UP BOOSTER	1	A-1,B
- 13	AN210-1A	. PULLEY	6	A-1,B
		/ATTACHING PARTS/		
- 14	AN3-7A	. BOLT	1	
- 15	AN3-12A	. BOLT	1	
	AN960-10L	. WASHER	5	
	AN960-10	. WASHER	2	
	AN365-1032	. NUT	2	
		----*----		
- 16	794-187051-18	. CABLE ASSY	1	A-1,B
- 17	794-187051-20	. CABLE ASSY	1	A-1,B
- 18	814-187022	. PLUG,FOLLOW UP CABLE SHEAR LINK	1	A-1,B
- 19	814-187023	. SNAP,FOLLOW UP CABLE SHEAR LINK	1	A-1,B
- 20	AN210-2A	. PULLEY	3	A-1,B
		/ATTACHING PARTS/		
- 21	S-124-24	. BOLT	1	
	AN960-10L	. WASHER	1	
	AN320-3	. NUT	1	
	AN380-2-2	. PIN,COTTER	1	
		----*----		

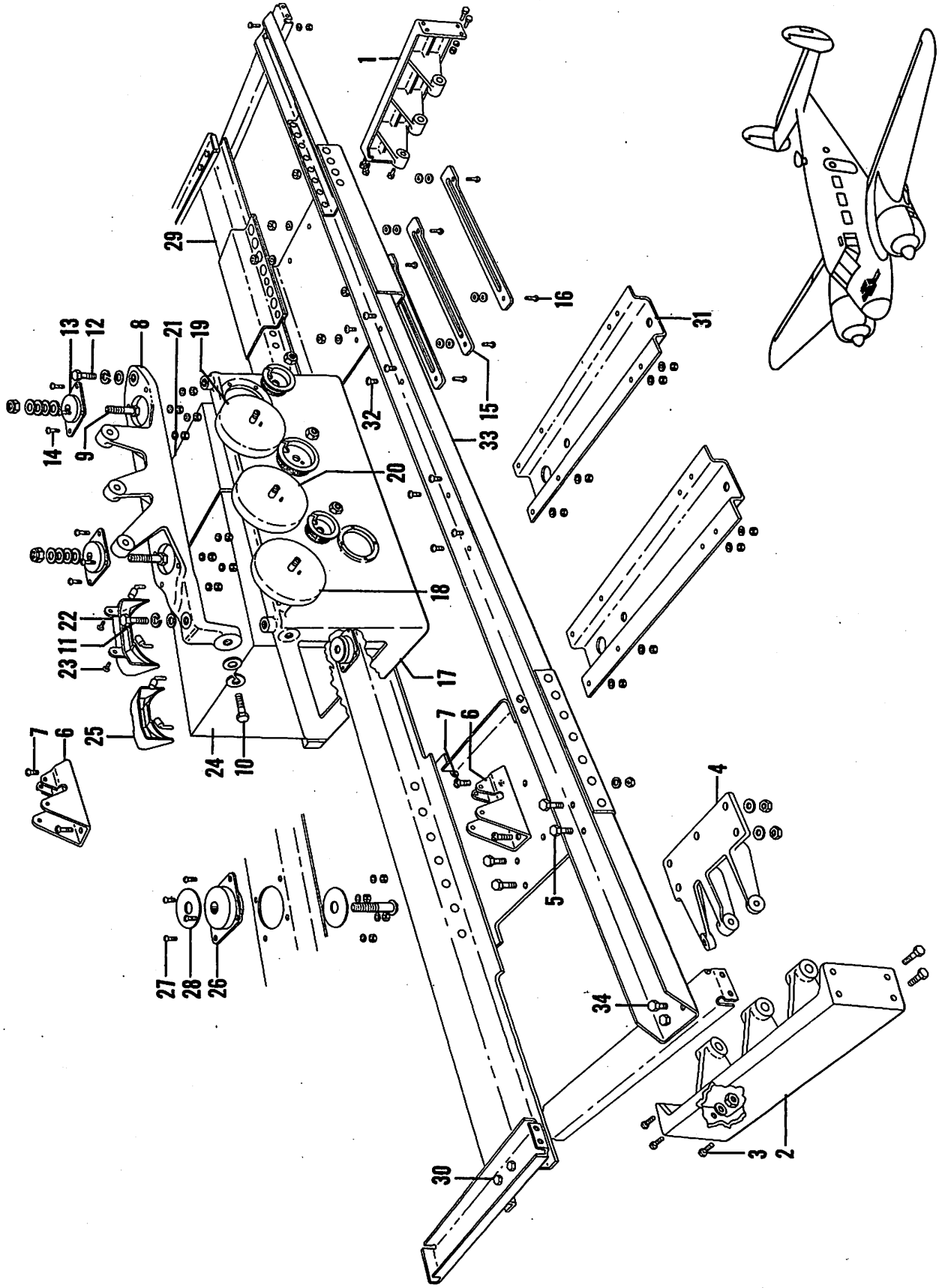

Figure 69. Gyro Pilot Mounting Structure Installation

FIG. & INDEX NO.	PART NO.	DESCRIPTION 1 2 3 4 5 6 7	UNITS PER ASSY	USABLE ON CODE
69	694-183840	STRUCTURE INSTL,GYRO PILOT MOUNTING /SEE FIG. 1 FOR NHA/	1	A-1,B
- 1	794-187275	. BRACKET,SERVO PULLEY LH	1	A-1,B
- 2	794-187275-1	. BRACKET,SERVO PULLEY RH /ATTACHING PARTS/	1	A-1,B
- 3	AN3-5A	. BOLT	4	
	AN960-10L	. WASHER	4	
	AN365-1032	. NUT	4	
- 4	814-187290	. BRACKET,GYRO PILOT FOLLOW UP PULLEY /ATTACHING PARTS/	1	A-1,B
- 5	AN3-5A	. BOLT	4	
	AN960-10	. WASHER	4	
	AN365-1032	. NUT	4	
- 6	794-187018	. BRACKET,GYRO PILOT FOLLOW UP PULLEY /ATTACHING PARTS/	2	A-1,B
- 7	AN526-832R8	. SCREW	2	
	AN960-8	. WASHER	2	
	AN365-832	. NUT	2	
- 8	824-187279	. SUPPORT,GYRO PILOT UPPER /ATTACHING PARTS/	1	A-1,B
- 9	AN4-12A	. BOLT	2	
	AN960-416	. WASHER	8	
	AN365-428	. NUT	2	
- 10	AN4-7A	. BOLT	1	
	AN935-416	. WASHER	3	
	AN960-416	. WASHER	3	
- 11	AN4-6A	. BOLT	1	
- 12	AN4-10A	. BOLT	1	
- 13	AN8008D7	. INSULATOR /ATTACHING PARTS/	2	A-1,B
- 14	AN515-8R10	. SCREW	4	
	AN960-8	. WASHER	4	
	AN365-832	. NUT	4	
- 15	814-187016	. GUIDE,GYRO PILOT FOLLOW UP CABLE /ATTACHING PARTS/	3	A-1,B
- 16	AN526-832R9	. SCREW	2	
	AN960-8	. WASHER	6	
	AN365-832	. NUT	2	
- 17	JH4000-1	. MOUNT ASSY,/31435/	1	A-1,B
- 18	JH20-1*	. PULLEY,/31435/	1	A-1,B
	114212*	. PULLEY,AUTO PILOT	1	A-1,B
- 19	JH20-2**	. PULLEY,/31435/	1	A-1,B
	113638**	. PULLEY,AUTO PILOT	1	A-1,B
- 20	JH20-5***	. PULLEY,/31435/	1	A-1,B
	114213***	. PULLEY,AUTO PILOT	1	A-1,B
- 21	NO NUMBER	. UNIT,DIRECTIONAL CONTROL/AF TYPE A-3A/ /GFAE/	1	A-1,B
- 22	B4788	. FIXTURE,LIGHTING /72914/ /ATTACHING PARTS/	1	A-1,B
- 23	AN507-836R10	. SCREW	2	

*THESE PARTS ARE INTERCHANGEABLE.
**THESE PARTS ARE INTERCHANGEABLE.
***THESE PARTS ARE INTERCHANGEABLE.

FIG. & INDEX NO.	PART NO.	DESCRIPTION 1 2 3 4 5 6 7	UNITS PER ASSY	USABLE ON CODE
69 - 24	NO NUMBER	. UNIT,BANK & CLIMB CONTROL/AF TYPE A-3A//GFAE/	1	A-1,B
- 25	B4788	. FIXTURE,LIGHTING /72914/.	1	A-1,B
- 26	AN8008D10	. INSULATOR . . . . . /ATTACHING PARTS/	2	A-1,B
- 27	AN515-8R7	. SCREW	4	
	AN960-8	. WASHER.	4	
	AN365-832	. NUT . . . . . ----*----	4	
- 28	AN8013D2	. WASHER.	2	A-1,B
- 29	694-187031	. CHANNEL ASSY,AUTO PILOT LOWER . . . . . /ATTACHING PARTS/	1	A-1,B
- 30	AN3-4A	. BOLT.	4	
	AN960-10L	. WASHER.	4	
	AN365-1032	. NUT . . . . . ----*----	4	
- 31	734-187013	. CHANNEL ASSY,SERVO UNIT SUPPORT . . . . . /ATTACHING PARTS/	2	A-1,B
- 32	AN515-8R8	. SCREW	8	
	AN960-8	. WASHER.	8	
	AN365-832	. NUT . . . . . ----*----	8	
- 33	794-187014	. CHANNEL ASSY,#3 BULKHEAD SERVO UNIT SUPPORT . /ATTACHING PARTS/	1	A-1,B
- 34	AN3-4A	. BOLT.	4	
	AN960-10	. WASHER.	4	
	AN365-1032	. NUT . . . . . ----*----	4	

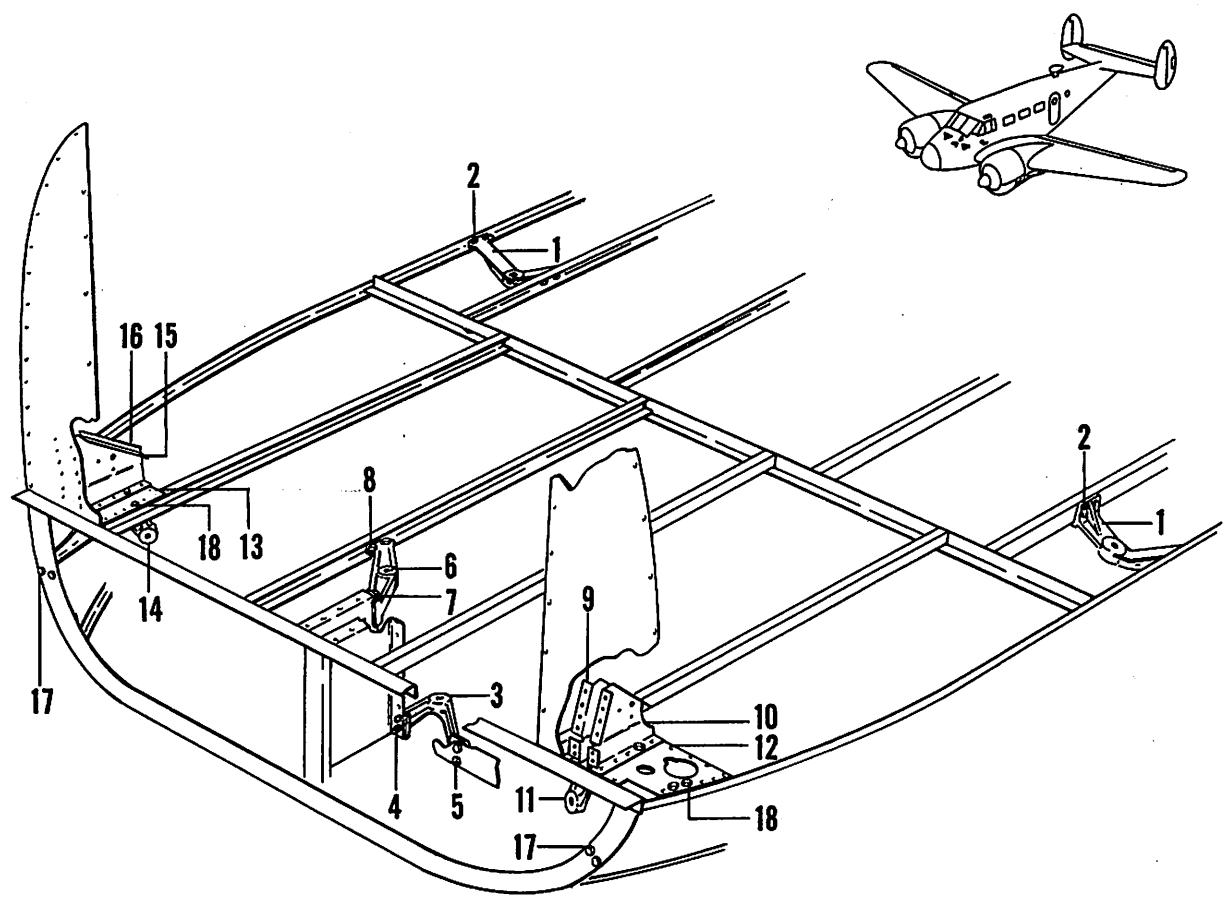

Figure 70. Lower Servo Pulley Bracket Installation

C45H-4-70

FIG. & INDEX NO.	PART NO.	DESCRIPTION 1 2 3 4 5 6 7	UNITS PER ASSY	USABLE ON CODE
70	734-187292	BRACKET INSTL,SERVO PULLEY /SEE FIG. 1 FOR NHA/	1	A-1,B
- 1	814-187280	. BRACKET,AILERON SERVO CABLE PULLEY. . . . . /ATTACHING PARTS/	2	A-1,B
- 2	AN3-5A	. BOLT.	4	
	AN960-10	. WASHER.	4	
	AN365-1032	. NUT	4	
		----*----		
- 3	814-187293	. BRACKET,ELEVATOR SERVO LOWER CENTER PULLEY. . /ATTACHING PARTS/	1	A-1,B
- 4	AN3-6A	. BOLT.	1	
- 5	AN3-5A	. BOLT.	1	
	AN960-10	. WASHER.	2	
	AN365-1032	. NUT	2	
		----*----		
- 6	734-187287	. BRACKET,ELEVATOR SERVO UPPER CENTER PULLEY. . /ATTACHING PARTS/	1	A-1,B
- 7	AN3-5A	. BOLT.	2	
- 8	AN3-6A	. BOLT.	2	
	AN960-10	. WASHER.	4	
	AN365-1032	. NUT	4	
		----*----		

FIG. & INDEX NO.	PART NO.	DESCRIPTION 1 2 3 4 5 6 7	UNITS PER ASSY	USABLE ON CODE
70 - 9	794-187294	• BRACKET,RUDDER SERVO PULLEY INBD LH • • • • •	1	A-1,B
- 10	794-187295	• BRACKET,RUDDER SERVO PULLEY OUTBD LH• • • • •	1	A-1,B
- 11	794-187016	• BRACKET,AILERON ELEVATOR SERVO LOWER PULLEY •	1	A-1,B
- 12	794-187293	• PLATE ASSY,ELEVATOR SERVO LOWER PULLEY LH • •	1	A-1,B
- 13	794-187293-1	• PLATE ASSY,ELEVATOR SERVO LOWER PULLEY RH • •	1	A-1,B
- 14	734-187016	• BRACKET,SERVO CABLE LOWER PULLEY OUTBD RH • •	1	A-1,B
- 15	794-187026-1	• BRACKET,RUDDER SERVO CABLE PULLEY INBD• • • •	1	A-1,B
- 16	794-187027-1	• BRACKET,RUDDER SERVO CABLE PULLEY OUTBD • • •	1	A-1,B
		/ATTACHING PARTS/		
- 17	AN3-5A	• BOLT• • • • • • • • • • • • • • • • • • • •	AR	
- 18	AN3-6A	• BOLT• • • • • • • • • • • • • • • • • • • •	AR	
	AN960-10	• WASHER• • • • • • • • • • • • • • • • • • •	AR	
	AN365-1032	• NUT •	AR	
		——*——		

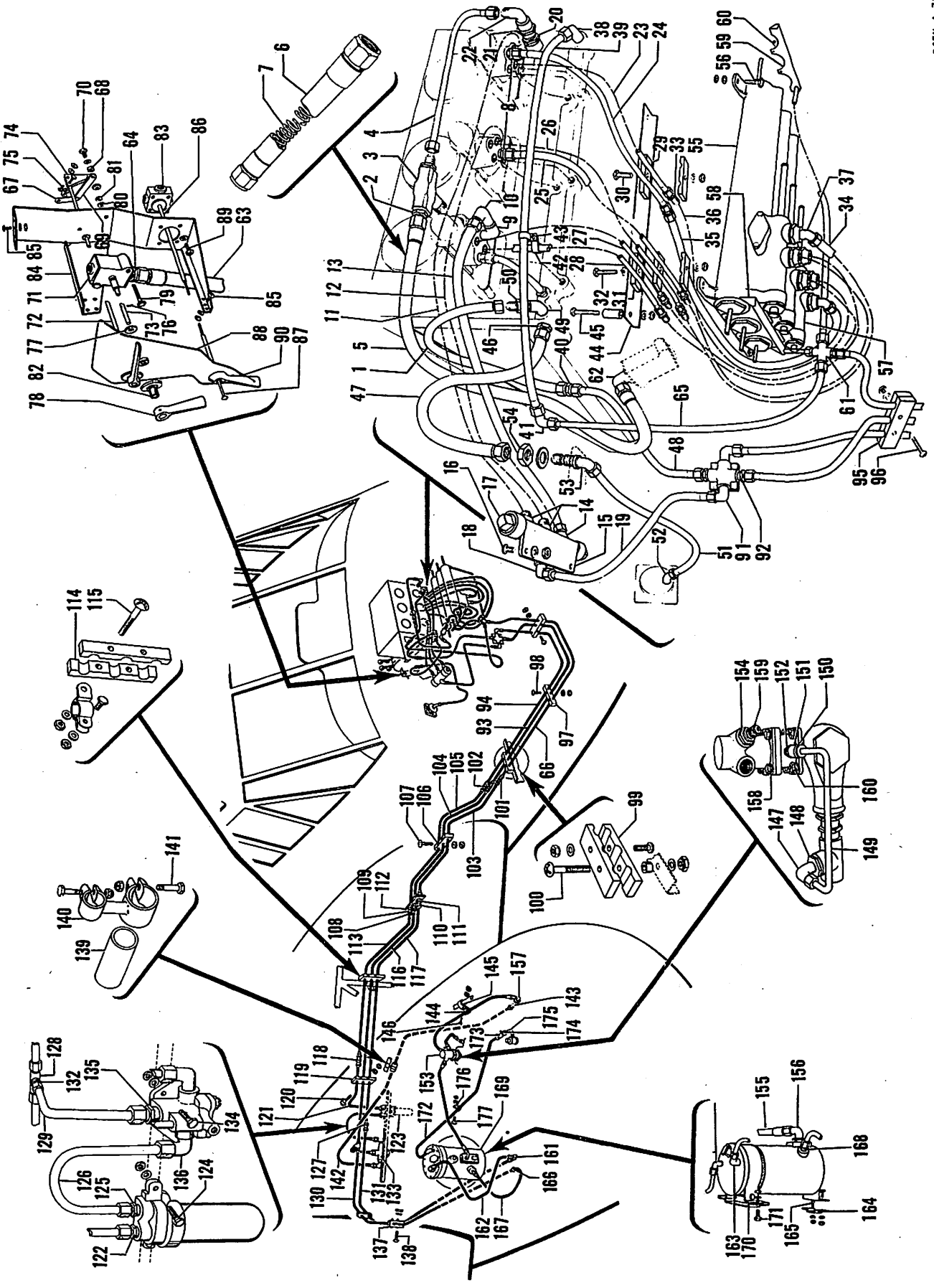

Figure 71. Gyro Pilot Piping Installation

FIG. & INDEX NO.	PART NO.	DESCRIPTION 1 2 3 4 5 6 7	UNITS PER ASSY	USABLE ON CODE
71	694-187200	PIPING INSTL,GYRO PILOT /SEE FIG. 1 FOR NHA/	1	A-1,B
- 1	AN6270-8-20	. HOSE ASSY	1	A-1,B
- 2	AN919-15D	. REDUCER	1	A-1,B
- 3	AN926-8D	. TEE	1	A-1,B
- 4	734-187235	. TUBE ASSY,DIRECTIONAL CONTROL VACUUM	1	A-1,B
- 5	734-187201	. HOSE ASSY,AUTO PILOT SHUTOFF VALVE TO PILOT	1	A-1,B
- 6	734-187201-2	. . HOSE ASSY,/MAKE FR AN6270-10-22/	1	A-1,B
- 7	734-187202	. . SPRING,VACUUM HOSE AUTOMATIC PILOT	1	A-1,B
- 8	AN816-6-2B	. NIPPLE	6	A-1,B
- 9	AN914-1D	. ELBOW,90 DEGREE	3	A-1,B
- 10	AN822-4D	. ELBOW,90 DEGREE	3	A-1,B
- 11	AN6270-4-20	. HOSE ASSY	1	A-1,B
- 12	AN6270-4-17	. HOSE ASSY	1	A-1,B
- 13	AN6270-4-13	. HOSE ASSY	1	A-1,B
- 14	AN823-4D	. ELBOW,45 DEGREE	3	A-1,B
- 15	JH3139	. MANIFOLD,/GFAE/	1	A-1,B
		/ATTACHING PARTS/		
- 16	AN526-832R9	. SCREW	2	
	AN960-8	. WASHER	2	
	AN365-832	. NUT	2	
		----*----		
- 17	AN913-3D	. PLUG	2	A-1,B
- 18	AN822-8D	. ELBOW,90 DEGREE	1	A-1,B
- 19	734-187230	. TUBE ASSY,GYRO PILOT MANIFOLD	1	A-1,B
- 20	AN911-2D	. NIPPLE	1	A-1,B
- 21	AN910-2D	. COUPLING	1	A-1,B
- 22	AN822-6D	. ELBOW,90 DEGREE	1	A-1,B
- 23	734-187225	. TUBE ASSY,AFT OIL VALVE PORT TO RUDDER SERVO	1	A-1,B
- 24	734-187224	. TUBE ASSY,FWD OIL VALVE PORT TO RUDDER SERVO	1	A-1,B
- 25	734-187227	. TUBE ASSY,AFT OIL VALVE PORT TO AILERON SERVO	1	A-1,B
- 26	734-187226	. TUBE ASSY,FWD OIL VALVE PORT TO AILERON SERVO	1	A-1,B
- 27	734-187228	. TUBE ASSY,FWD OIL VALVE PORT TO ELEV SERVO	1	A-1,B
- 28	734-187229	. TUBE ASSY,AFT OIL VALVE PORT TO ELEV SERVO	1	A-1,B
- 29	734-187213	. CLAMP,SERVO HYDRAULIC LINES LH	1	A-1,B
		/ATTACHING PARTS/		
- 30	AN3-20A	. BOLT	1	
	AN960-10L	. WASHER	1	
	AN365-1032	. NUT	1	
		----*----		
- 31	734-187212	. CLAMP,SERVO HYDRAULIC LINES RH	1	A-1,B
		/ATTACHING PARTS/		
- 32	AN3-23A	. BOLT	1	
	AN960-10L	. WASHER	1	
	AN365-1032	. NUT	1	
		----*----		
- 33	AN815-6D	. UNION	6	A-1,B
- 34	AN6270-6-13	. HOSE ASSY	4	A-1,B
- 35	AN6270-6-17	. HOSE ASSY	1	A-1,B
- 36	AN6270-6-15	. HOSE ASSY	1	A-1,B
- 37	AN823-6D	. ELBOW,45 DEGREE	6	A-1,B
- 38	AN823-6D	. ELBOW,45 DEGREE	1	A-1,B
- 39	734-187223	. TUBE ASSY,GYRO PILOT RETURN LINE	1	A-1,B
- 40	AN815-8D	. UNION	1	A-1,B
- 41	AN821-6D	. ELBOW,90 DEGREE	1	A-1,B
- 42	AN742D8C	. CLAMP	2	A-1,B
		/ATTACHING PARTS/		
- 43	AN520-10-8	. SCREW	1	
	AN960-10L	. WASHER	1	
	AN365-1032	. NUT	1	
		----*----		

FIG. & INDEX NO.	PART NO.	DESCRIPTION 1 2 3 4 5 6 7	UNITS PER ASSY	USABLE ON CODE
71 - 44	734-187211	• BRACKET,SERVO HYDRAULIC LINES SUPPORT	1	A-1,B
		/ATTACHING PARTS/		
- 45	AN3-14A	• BOLT	2	
	100696-D10-07-028	• SPACER	2	
	AN960-10	• WASHER	2	
	AN365-1032	• NUT	2	
		----*----		
- 46	AN815-6D	• UNION	1	A-1,B
- 47	AN6270-4-12	• HOSE ASSY	1	A-1,B
- 48	734-187036	• TUBE ASSY,OIL FILTER & PRESSURE REGULATOR	1	A-1,B
- 49	AN915-2D	• ELBOW,45 DEGREE	1	A-1,B
- 50	AN815-7D	• NIPPLE	1	A-1,B
- 51	694-187234	• TUBE ASSY,HYDRAULIC PRESSURE GAGE	1	A-1,B
- 52	AN823-4D	• ELBOW,45 DEGREE	1	A-1,B
- 53	AN837-4D	• ELBOW,45 DEGREE	1	A-1,B
- 54	AN924-4D	• NUT	1	A-1,B
	AN960D716	• WASHER	1	A-1,B
- 55	734-187065	• UNIT ASSY,SERVO	1	A-1,B
		/ATTACHING PARTS/		
- 56	AN4-7A	• BOLT	4	
	AN960-416	• WASHER	8	
	AN970-4	• WASHER	8	
	AN960-416L	• WASHER	4	
		----*----		
- 57	734-187065-2	• • SERVO,/MAKE FR TYPE S-3/ /31435/	1	A-1,B
- 58	814-187302	• • PAN ASSY,RIGHT SERVO DRIP	1	A-1,B
- 59	814-187301	• • PAN ASSY,LEFT SERVO DRIP	1	A-1,B
		/ATTACHING PARTS/		
- 60	AN530-4-4	• • SCREW	2	
		----*----		
- 61	AN824-6D	• • CROSS	1	A-1,B
- 62	AN822-10D	• ELBOW,90 DEGREE	1	A-1,B
- 63	694-187231	• TUBE ASSY,GYRO PILOT MAIN VACUUM	1	A-1,B
- 64	AN816-10D	• NIPPLE	1	A-1,B
- 65	AN6270-6-10	• HOSE	1	A-1,B
- 66	734-187236	• TUBE ASSY,GYRO PILOT HYDRAULIC RETURN INBD	1	A-1,B
	734-187034	• CONTROL INSTL,GYRO PILOT	1	A-1,B
- 67	894-187005	• • ARM ASSY,AUTOMATIC PILOT MASTER CONTROL	1	A-1,B
- 68	100951-A-.064-007-024	• • WASHER	2	A-1,B
- 69	794-187029	• • LINK,SERVO ON-OFF VALVE CONTROL	1	A-1,B
		/ATTACHING PARTS/		
- 70	AN3-5A	• • BOLT	2	
	AN365-1032	• • NUT	2	
	814-187087	• • SPACER	2	
		----*----		
- 71	734-187035	• • VALVE ASSY,SUCTION CROSSFEED	1	A-1,B
- 72	794-187032	• • TUBE,SERVO ON-OFF VALVE CONTROL	1	A-1,B
- 73	734-187041	• • SHAFT ASSY,AUTO PILOT VACUUM VALVE	1	A-1,B
- 74	814-187082	• • ARM,SERVO ON-OFF VALVE	1	A-1,B
		/ATTACHING PARTS/		
- 75	AN515-8-14	• • SCREW	1	
	AN960-8	• • WASHER	1	
	AN365-832	• • NUT	1	
		----*----		
- 76	AN380-2-3	• • PIN,COTTER	2	A-1,B
- 77	AN960-616L	• • WASHER	1	A-1,B
- 78	734-187121	• • HANDLE,AUTO PILOT VALVE	2	A-1,B

FIG. & INDEX NO.	PART NO.	DESCRIPTION 1 2 3 4 5 6 7	UNITS PER ASSY	USABLE ON CODE
71 - 79	AN3-21A	. . BOLT.	2	A-1,B
- 80	AN960-10L	. . WASHER.	2	A-1,B
- 81	AN365-1032	. . NUT	2	A-1,B
- 82	734-187040	. . BUSHING,AUTO PILOT VALVE INDEX.	2	A-1,B
- 83	5051-2-3/8D	. . VALVE,/45681/	1	A-1,B
- 84	734-187039	. . BRACKET ASSY,AUTO PILOT VALVE SUPPORT . . . /ATTACHING PARTS/	1	A-1,B
- 85	AN515-8R8	. . SCREW	7	
	AN960-8	. . WASHER.	12	
	AN515-8-8	. . SCREW	3	
	AN365-832	. . NUT	12	
		----*----		
- 86	814-187003	. . SHAFT ASSY,GYRO PILOT ON-OFF VALVE. . . .	1	A-1,B
- 87	814-187002	. . SCREW,GYRO PILOT ON-OFF VALVE HANDLE ATTACH	1	A-1,B
- 88	734-187030	. . BRACKET ASSY,SERVO ON-OFF VALVE CONTROL . . /ATTACHING PARTS/	1	A-1,B
- 89	AN520-10R7	. . SCREW	4	
	AN935-10L	. . WASHER.	4	
		----*----		
- 90	734-187034-2	. . WIRE,HANDLE ATTACHING	1	A-1,B
- 91	AN822-8D	. ELBOW,90 DEGREE	2	A-1,B
- 92	AN816-8D	. NIPPLE.	2	A-1,B
- 93	734-187237	. TUBE ASSY,SPEED CONTROL RETURN INBD	1	A-1,B
- 94	734-187238	. TUBE ASSY,PRESSURE LINE CENTER INBD	1	A-1,B
- 95	814-187013	. BLOCK ASSY,GYRO PILOT PIPING SUPPORT UPPER. . /ATTACHING PARTS/	1	A-1,B
- 96	AN515-8R24	. SCREW	2	
	AN960-8	. WASHER.	2	
	AN365-832	. NUT	2	
		----*----		
- 97	814-187010	. BLOCK ASSY,GYRO PILOT PIPING SUPPORT WING . . /ATTACHING PARTS/	1	A-1,B
- 98	AN515-8R24	. SCREW	2	
	AN960-8	. WASHER.	2	
	AN365-832	. NUT	2	
		----*----		
- 99	814-187010	. BLOCK ASSY,GYRO PILOT PIPING SUPPORT WING . . /ATTACHING PARTS/	1	A-1,B
-100	AN515-8R28	. SCREW	1	
	AN515-8R24	. SCREW	1	
	100696-D08-06-610	. SPACER.	1	
	AN960-8	. WASHER.	2	
	AN365-832	. NUT	2	
		----*----		
-101	AN518-6D	. UNION	1	A-1,B
-102	AN815-8D	. UNION	2	A-1,B
-103	734-187241	. TUBE ASSY,PILOT RETURN CENTER INBD.	1	A-1,B
-104	734-187240	. TUBE ASSY,SPEED CONTROL RETURN CENTER INBD. .	1	A-1,B
-105	734-187239	. TUBE ASSY,GYRO PILOT PRESSURE LINE INBD . . .	1	A-1,B
-106	814-187012	. BLOCK ASSY,GYRO PILOT PIPING SUPPORT LOWER. . /ATTACHING PARTS/	1	A-1,B
-107	AN515-8R28	. SCREW	2	
	AN960-8	. WASHER.	2	
	AN365-832	. NUT	2	
		----*----		
-108	AN832-8D	. UNION	2	A-1,B
-109	AN924-8D	. NUT	2	A-1,B
-110	AN832-6D	. UNION	1	A-1,B
-111	AN924-6D	. NUT	1	A-1,B

FIG. & INDEX NO.	PART NO.	DESCRIPTION 1 2 3 4 5 6 7	UNITS PER ASSY	USABLE ON CODE
71 -112	814-187211	. SPACER,GYRO PILOT RETURN.	1	A-1,B
-113	814-187034	. TUBE ASSY,PRESSURE LINE CENTER OUTBD. . . .	1	A-1,B
-114	814-187010	. BLOCK ASSY,GYRO PILOT PIPING SUPPORT WING . .	1	A-1,B
	I189667	. CLAMP,SERVO HYDRAULIC LINES	2	A-1,B
		/ATTACHING PARTS/		
-115	AN515-8R24	. SCREW	2	
	AN960-8	. WASHER.	2	
	AN365-832	. NUT	2	
	AN3-7A	. BOLT.	2	
	AN960-10	. WASHER.	2	
	AN365-1032	. NUT	2	
		----*----		
-116	814-187040	. TUBE ASSY,SPEED CONTROL RETURN CENTER OUTBD .	1	A-1,B
-117	814-187044	. TUBE ASSY,GYRO PILOT RETURN CENTER OUTBD. . .	1	A-1,B
-118	AN815-8D	. UNION	1	A-1,B
-119	814-187010	. BLOCK ASSY,GYRO PILOT PIPING SUPPORT WING . .	1	A-1,B
		/ATTACHING PARTS/		
-120	AN515-8R24	. SCREW	2	
	AN960-8	. WASHER.	2	
	AN365-832	. NUT	2	
		----*----		
-121	814-187035	. TUBE ASSY,PRESSURE LINE OUTBD	1	A-1,B
-122	AN816-8D	. NIPPLE.	1	A-1,B
-123	94-27983A	. FILTER,OIL /GFAE/	1	A-1,B
		/ATTACHING PARTS/		
-124	AN4-6A	. BOLT.	2	
	AN960-416	. WASHER.	2	
	AN365-428	. NUT	2	
		----*----		
-125	AN816-8D	. NIPPLE.	1	A-1,B
-126	794-187215	. TUBE ASSY,OIL FILTER & PRESSURE REGULATOR . .	1	A-1,B
-127	AN815-6D	. UNION	1	A-1,B
-128	AN824-8D	. TEE	1	A-1,B
-129	794-187214	. TUBE ASSY,GYRO PILOT PRESSURE REGULATOR . . .	1	A-1,B
-130	814-187041	. TUBE ASSY,SPEED CONTROL RETURN OUTBD.	1	A-1,B
-131	814-187045	. TUBE ASSY,GYRO PILOT RETURN OUTBD	1	A-1,B
-132	AN816-6D	. NIPPLE.	1	A-1,B
-133	NO NUMBER	. REGULATOR,PRESSURE /SPEC. 94-27984A/ /GFAE/ .	1	A-1,B
		/ATTACHING PARTS/		
-134	AN4-10A	. BOLT.	2	
	AN960-416	. WASHER.	6	
	AN365-428	. NUT	2	
		----*----		
-135	AN816-8D	. NIPPLE.	1	A-1,B
-136	AN822-8D	. ELBOW,90 DEGREE	2	A-1,B
-137	814-187011	. BLOCK ASSY,GYRO PILOT PIPING SUPPORT NACELLE.	2	A-1,B
		/ATTACHING PARTS/		
-138	AN515-8R24	. SCREW	4	
	AN960-8	. WASHER.	4	
	AN365-1032	. NUT	4	
		----*----		
	84-189660	. PUMP INSTL,GYRO PILOT HYDRAULIC	1	A-1,B
-139	106200H-8-4	. . HOSE.	1	A-1,B
-140	84-189661	. . SUPPORT ASSY,GYRO PILOT OIL PRESSURE LINE .	1	A-1,B
		/ATTACHING PARTS/		
-141	AN3-7	. . BOLT.	1	
	AN4-10	. . BOLT.	1	
	AN310-3	. . NUT	1	
	AN310-4	. . NUT	1	
	AN380-2-2	. . PIN,COTTER.	2	
		----*----		

FIG. & INDEX NO.	PART NO.	DESCRIPTION 1 2 3 4 5 6 7	UNITS PER ASSY	USABLE ON CODE
71 -142	794-189661*	. . TUBE ASSY,HYDRAULIC PUMP & PRESS. REGULATOR	1	A-1,B
	814-189664**	. . TUBE ASSY,HYDRAULIC PUMP & PRESS. REGULATOR	1	A-1,B
-143	AN823-8D	. . ELBOW,45 DEGREE	1	A-1,B
-144	AN742-14C	. . CLIP.	1	A-1,B
-145	AN742-16	. . CLIP.	1	A-1,B
		/ATTACHING PARTS/		
-146	AN515-8-10	. . SCREW	1	
	AN960-8	. . WASHER.	1	
	AN365-832	. . NUT	1	
		----*----		
-147	AAF811CT45-4D	. . ELBOW,45 DEGREE	1	A-1,B
-148	AN912-3D	. . BUSHING	1	A-1,B
-149	189688	. . TUBE ASSY,HYDRAULIC PUMP DRAIN.	1	A-1,B
-150	AN737-22C	. . CLAMP,/66295/	2	A-1,B
-151	AN844-4-11	. . HOSE.	1	A-1,B
-152	AN840-4	. . ADAPTER	1	A-1,B
-153	RD4950***	. . PUMP,HYDRAULIC /51663/.	1	A-1,B
	1P-196AB***	. . PUMP,HYDRAULIC /51663/.	1	A-1,B
-154	AN912-8	. . REDUCER	3	A-1,B
-155	AN6271-8-21	. . HOSE.	2	A-1,B
-156	AN822-8D	. . ELBOW,90 DEGREE	1	A-1,B
-157	AN823-8D	. . ELBOW,45 DEGREE	1	A-1,B
-158	AN960-416L	. . WASHER.	4	A-1,B
-159	AN816-8D	. . NIPPLE.	2	A-1,B
-160	AN960-416	. . WASHER.	8	A-1,B
	814-187025	. GYRO INSTL,OIL SUMP PILOT	1	A-1,B
-161	AN822-6D	. . ELBOW,90 DEGREE	1	A-1,B
-162	814-187046	. . TUBE ASSY,GYRO PILOT RETURN SUMP.	1	A-1,B
-163	AN822-6	. . ELBOW,90 DEGREE	1	A-1,B
-164	84-187276	. . BRACKET,OIL SUMP SUPPORTING LOWER	1	A-1,B
		/ATTACHING PARTS/		
-165	AN4-5A	. . BOLT.	2	
	AN960-416	. . WASHER.	2	
	AN365-428	. . NUT	2	
	AN515-8-10	. . SCREW	2	
	AN960-8	. . WASHER.	4	
	AN365-832	. . NUT	4	
		----*----		
-166	AN816-8D	. . NIPPLE.	1	A-1,B
-167	814-187049	. . TUBE ASSY,SPEED CONTROL RETURN SUMP	1	A-1,B
-168	AN816-8	. . NIPPLE.	1	A-1,B
-169	644681	. . SUMP,OIL /56232/.	1	A-1,B
-170	84-187277	. . BRACKET,OIL SUMP SUPPORTING UPPER	1	A-1,B
		/ATTACHING PARTS/		
-171	AN4-5A	. . BOLT.	2	
	AN960-416	. . WASHER.	2	
	AN365-428	. . NUT	2	
		----*----		

*THIS PART IS USED WHEN /56232/ #6442565 OR /24446/ #8292141-G1 OIL PRESSURE REGULATOR IS INSTALLED.

**THIS PART IS USED WHEN /31435/ #3120 OIL PRESSURE REGULATOR IS INSTALLED.

***PARTS ARE INTERCHANGEABLE.

FIG. & INDEX NO.	PART NO.	DESCRIPTION 1 2 3 4 5 6 7	UNITS PER ASSY	USABLE ON CODE
71 -172	814-187206	. . TUBE ASSY,AUTOMATIC PILOT SUMP VACUUM . . .	1	A-1,B
-173	106200H-4-12	. . HOSE.	1	A-1,B
-174	AN737-22	. . CLAMP	2	A-1,B
-175	AN842-4D	. . ELBOW,45 DEGREE	1	A-1,B
-176	AN742D4	. . CLIP.	1	A-1,B
		/ATTACHING PARTS/		
-177	AN515-8-7	. . SCREW	1	
	AN960-8	. . WASHER.	1	
	AN365-832	. . NUT	2	
		----*----		

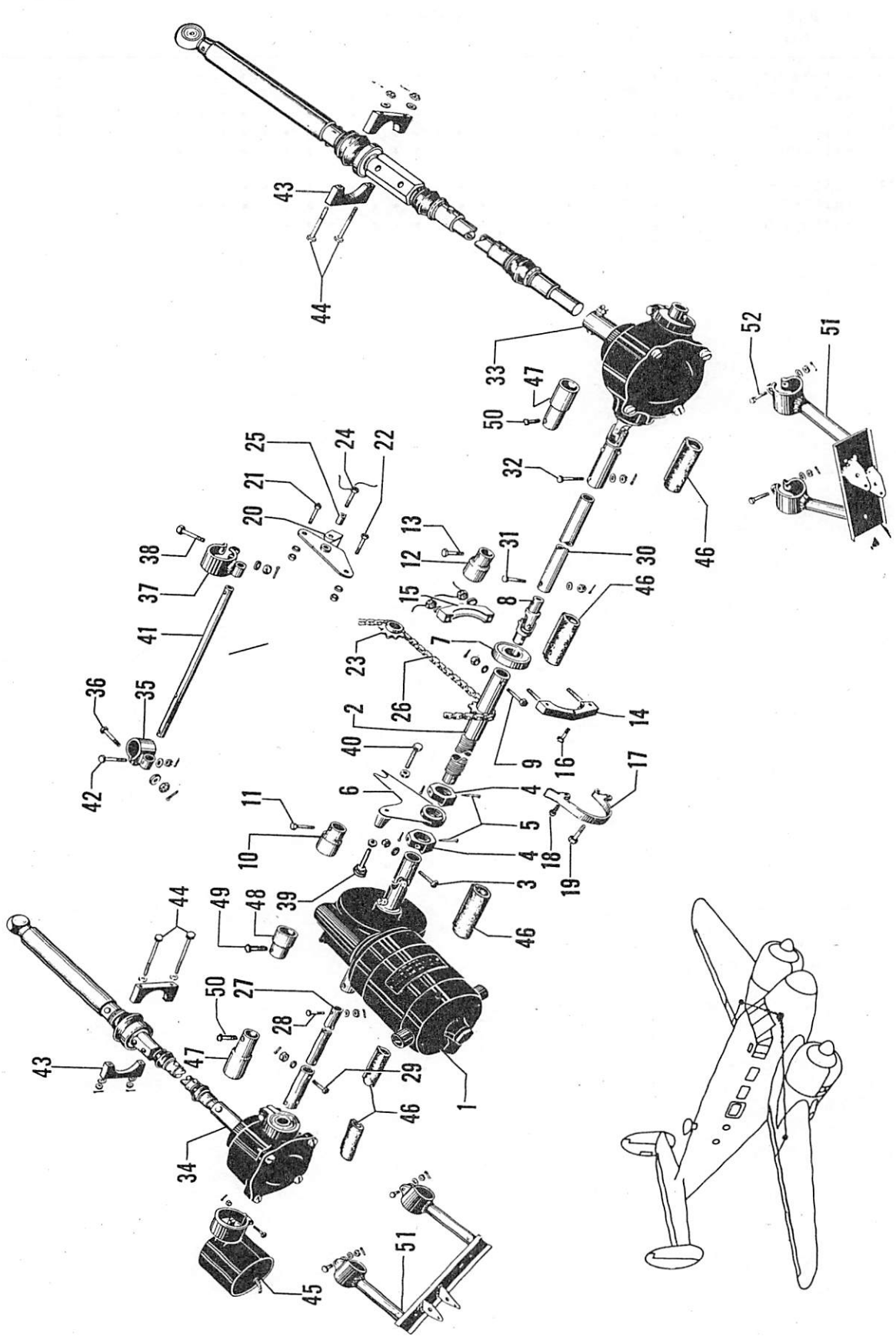

Figure 72. Wing Flap Mechanism Installation

FIG. & INDEX NO.	PART NO.	DESCRIPTION 1 2 3 4 5 6 7	UNITS PER ASSY	USABLE ON CODE
72	894-187810-1	MECHANISM INSTL,WING FLAP /SEE FIG. 1 FOR NHA/.	1	A-1
	894-187810	MECHANISM INSTL,WING FLAP /SEE FIG. 1 FOR NHA/.	1	B
	404-187840	MECHANISM INSTL,WING FLAP /SEE FIG. 1 FOR NHA/.	1	A-2
	187830-1	. MECHANISM ASSY,WING FLAP.	1	A-1
	187830	. MECHANISM ASSY,WING FLAP.	1	B
	404-187830	. MECHANISM ASSY,WING FLAP.	1	A-2
- 1	187090-1	. . CLUTCH & MOTOR ASSY,FLAP MECHANISM. . . . /SEE FIGURE 75/	1	A-1
	187090	. . CLUTCH & MOTOR ASSY,FLAP MECHANISM. . . . /SEE FIGURE 75/	1	B
	404-187835	. . MOTOR ASSY,FLAP MECHANISM /SEE FIG. 76/ . .	1	A-2
- 2	187825	. . SHAFT,FLAP MECHANISM CROSS. . . . . /ATTACHING PARTS/	1	
- 3	AN3-11	. . BOLT.	1	
	AN960-10	. . WASHER.	1	
	AN310-3	. . NUT	1	
	AN380-2-2	. . PIN,COTTER.	1	
		----*----		
- 4	187755	. . STOP,FLAP MECHANISM ARM LIMIT SWITCH. . . . /ATTACHING PARTS/	2	
- 5	AN393-37	. . PIN	2	
	AN380-2-2	. . PIN,COTTER.	2	
		----*----		
- 6	187812	. . ARM ASSY,FLAP LIMIT SWITCH.	1	
- 7	AN201K12A	. . BEARING	1	
- 8	187752-2	. . UNIVERSAL,FLAP MECHANISM. . . . . /ATTACHING PARTS/	1	
- 9	S-124-24	. . BOLT.	1	
	AN960-10L	. . WASHER.	1	
	AN320-3	. . NUT	1	
	AN380-2-2	. . PIN,COTTER.	1	
		----*----		
- 10	187779-3	. . GUARD,FLAP CONTROL SHAFT UNIVERSAL. . . . /ATTACHING PARTS/	1	
- 11	AN3-12	. . BOLT.	1	
		----*----		
- 12	187789	. . GUARD,FLAP DRIVE SHAFT UNIVERSAL. . . . . /ATTACHING PARTS/	1	
- 13	AN3-12	. . BOLT.	1	
		----*----		
- 14	187753-1	. HOUSING ASSY,FLAP CROSS SHAFT BEARING	1	
	187753-3	. . HOUSING	1	
	S-122	. . STUD.	2	
- 15	187753-2	. HOUSING,FLAP CROSS SHAFT BEARING. . . . . /ATTACHING PARTS/	1	
- 16	S-73-11	. BOLT.	1	
	AN960-416	. WASHER.	1	
	AN310-3	. NUT	1	
	AN310-4	. NUT	2	
		----*----		
- 17	188851-2	. GUARD,SPROCKET. . . . . /ATTACHING PARTS/	1	
- 18	AN3-12	. BOLT.	1	
- 19	S-73-12	. BOLT.	1	
	AN960-10	. WASHER.	2	
	AN960-416	. WASHER.	1	
	AN310-3	. NUT	2	
	AN380-2-2	. PIN,COTTER.	2	
		----*----		
- 20	187788	. BRACKET ASSY,FLAP CHAIN IDLER . . . . . /ATTACHING PARTS/	1	
- 21	AN3-4A	. BOLT.	1	
- 22	AN3-5A	. BOLT.	1	
	AN960-10	. WASHER.	2	
	AN365-1032	. NUT	2	
		----*----		

FIG. & INDEX NO.	PART NO.	DESCRIPTION 1 2 3 4 5 6 7	UNITS PER ASSY	USABLE ON CODE
72 - 23	188562	. SPROCKET,FLAP CHAIN IDLER	1	
		/ATTACHING PARTS/		
- 24	AN74-7	. BOLT.	1	
- 25	188009	. BUSHING,FLAP CHAIN IDLER SPROCKET	1	
		----*----		
- 26	187785	. CHAIN,FLAP HAND CRANK	1	
- 27	187831	. TUBE,FLAP MECHANISM DRIVE	1	
		/ATTACHING PARTS/		
- 28	AN3-7	. BOLT.	1	
- 29	AN3-10	. BOLT.	1	
	AN960-10	. WASHER.	2	
	AN310-3	. NUT	2	
	AN380-2-2	. PIN,COTTER.	2	
		----*----		
- 30	187787-1	. TUBE,FLAP MECHANISM DRIVE	1	
		/ATTACHING PARTS/		
- 31	AN3-7	. BOLT.	1	
- 32	AN3-10	. BOLT.	1	
	AN960-10	. WASHER.	2	
	AN310-3	. NUT	2	
	AN380-2-2	. PIN,COTTER.	2	
		----*----		
- 33	894-187758	. MECHANISM ASSY,FLAP OUTBD LH /SEE FIG. 73/. .	1	
- 34	894-187759	. MECHANISM ASSY,FLAP OUTBD RH /SEE FIG. 73/. .	1	
- 35	187756-3	. BRACKET ASSY,FLAP LIMIT SWITCH ARM SLIDE. . .	1	
		/ATTACHING PARTS/		
- 36	AN3-7	. BOLT.	1	
	AN960-10	. WASHER.	1	
	AN310-3	. NUT	1	
	AN380-2-2	. PIN,COTTER.	1	
		----*----		
- 37	187756-1	. BRACKET ASSY,FLAP LIMIT SWITCH ARM SLIDE. . .	1	
		/ATTACHING PARTS/		
- 38	AN3-7	. BOLT.	1	
	AN960-10	. WASHER.	1	
	AN310-3	. NUT	1	
	AN380-2-2	. PIN,COTTER.	1	
		----*----		
- 39	694-187837	. BOLT ASSY,FLAP LIMIT SWITCH ACTUATOR.	1	
- 40	187838	. BOLT,FLAP LIMIT SWITCH ADJUSTING.	1	
	AN316-5R	. NUT	1	
	AN315-3R	. NUT	1	
- 41	187786	. TUBE,WING FLAP SLIDE ARM.	1	
		/ATTACHING PARTS/		
- 42	AN3-7	. BOLT.	1	
	AN960-10	. WASHER.	1	
	AN310-3	. NUT	1	
	AN380-2-2	. PIN,COTTER.	1	
		----*----		
- 43	187773	. HOUSING,FLAP CONTROL SCREW BEARING.	4	
		/ATTACHING PARTS/		
- 44	AN4-24	. BOLT.	2	
	AN960-416	. WASHER.	2	
	AN310-4	. NUT	2	
	AN380-2-2	. PIN,COTTER.	2	
		----*----		
- 45	187800	. TRANSMITTER ASSY,FLAP POSITION.	1	
	187800-1	. . RHEOSTAT ASSY,/DRILL ON INSTL/.	1	
- 46	187837	. BOOT ASSY	5	
- 47	187779-1	. GUARD,FLAP CONTROL SHAFT UNIVERSAL.	2	
- 48	187779-2	. GUARD,FLAP CONTROL SHAFT UNIVERSAL.	1	
		/ATTACHING PARTS/		
- 49	AN3-10	. BOLT.	1	
- 50	AN3-11	. BOLT.	1	
		----*----		

FIG. & INDEX NO.	PART NO.	DESCRIPTION	UNITS PER ASSY	USABLE ON CODE
72 - 51	894-187820	BRACKET ASSY,FLAP GEAR HOUSING LH	1	
	894-187820-1	BRACKET ASSY,FLAP GEAR HOUSING RH	1	
		/ATTACHING PARTS/		
- 52	AN4-10	BOLT	2	
	AN960-416	WASHER	2	
	AN310-4	NUT	2	
	AN380-2-2	PIN,COTTER	2	

-----*-----

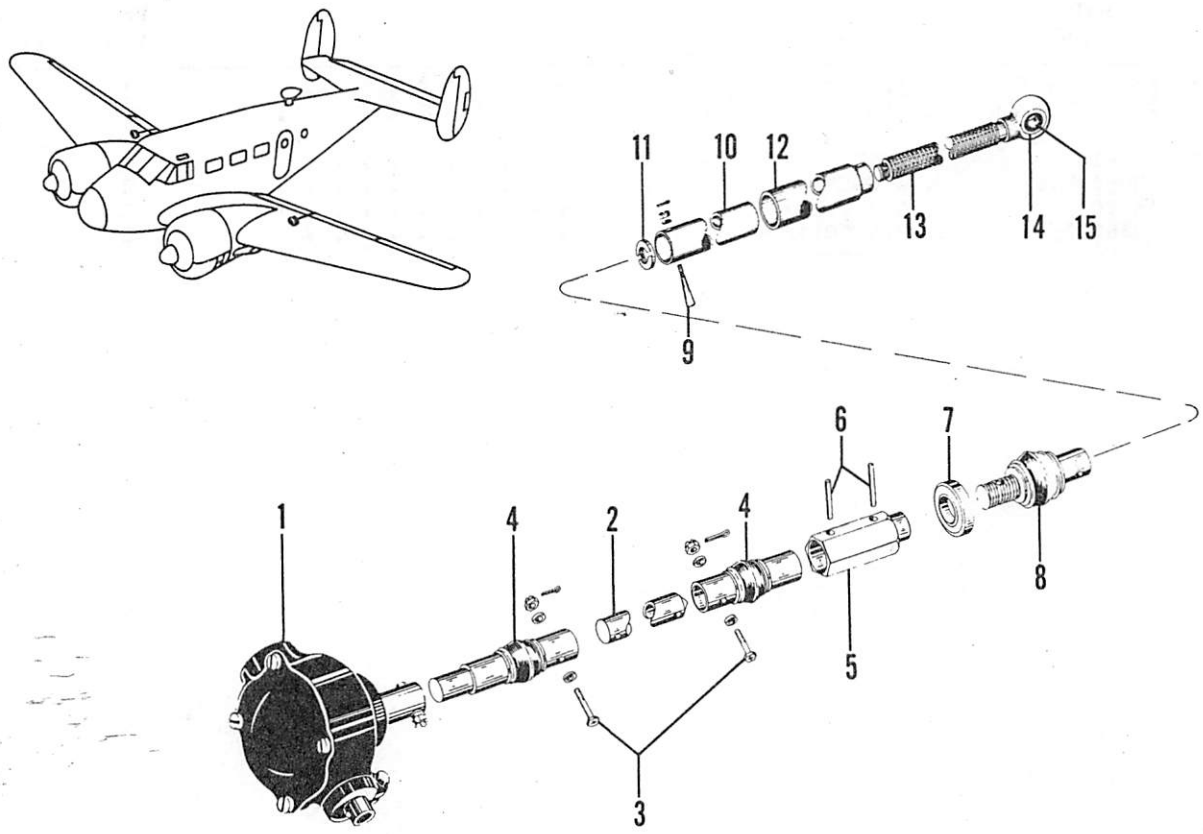

Figure 73. Flap Control Drive Assembly

C45H-4-73

FIG. & INDEX NO.	PART NO.	DESCRIPTION 1 2 3 4 5 6 7	UNITS PER ASSY	USABLE ON CODE
73	894-187758	MECHANISM ASSY,FLAP CONTROL OUTBD LH. . . . . /SEE FIG. 72 FOR NHA/	REF	
	894-187759	MECHANISM ASSY,FLAP CONTROL OUTBD RH. . . . . /SEE FIG. 72 FOR NHA/	REF	
- 1	894-187760	. BOX ASSY,FLAP CONTROL GEAR LH /SEE FIG. 74/ .	1	
	894-187761	. BOX ASSY,FLAP CONTROL GEAR RH /SEE FIG. 74/ .	1	
	187762	. SCREW ASSY,FLAP CONTROL	1	
- 2	187762-4	. . SHAFT,SCREW ASSY FLAP CONTROL . . . . . /ATTACHING PARTS/	1	
- 3	S-126-20	. . BOLT.	2	
	AN960-416	. . WASHER.	4	
	AN320-4	. . NUT	2	
	AN380-2-2	. . PIN,COTTER. . . . . ----*----	2	
- 4	AN271B10	. . JOINT,UNIVERSAL	2	
- 5	187777	. . COLLAR,SCREW ASSY FLAP CONTROL.	1	
- 6	187762-2	. . BAR,SCREW ASSY FLAP CONTROL	2	
- 7	203KDD	. . BEARING,/21335/	1	
- 8	106561	. . UNIVERSAL,FLAP CONTROL SCREW. . . . . /ATTACHING PARTS/	1	
- 9	187798	. . PIN,TAPER	1	
	AN960-416	. . WASHER.	1	
	AN320-3	. . NUT	1	
	AN380-2-2	. . PIN,COTTER. . . . . ----*----	1	

FIG. & INDEX NO.	PART NO.	DESCRIPTION	UNITS PER ASSY	USABLE ON CODE
73 - 10	187763	. . HOUSING,FLAP CONTROL SCREW.	1	
- 11	187805	. . RING,FLAP CONTROL SCREW STOP.	1	
- 12	187778	. . SHIELD,SCREW ASSY FLAP CONTROL DUST	1	
- 13	187776	. . SCREW,FLAP CONTROL.	1	
- 14	K4A	. . BEARING,/21335/	1	
- 15	187828	. . SPACER.	1	

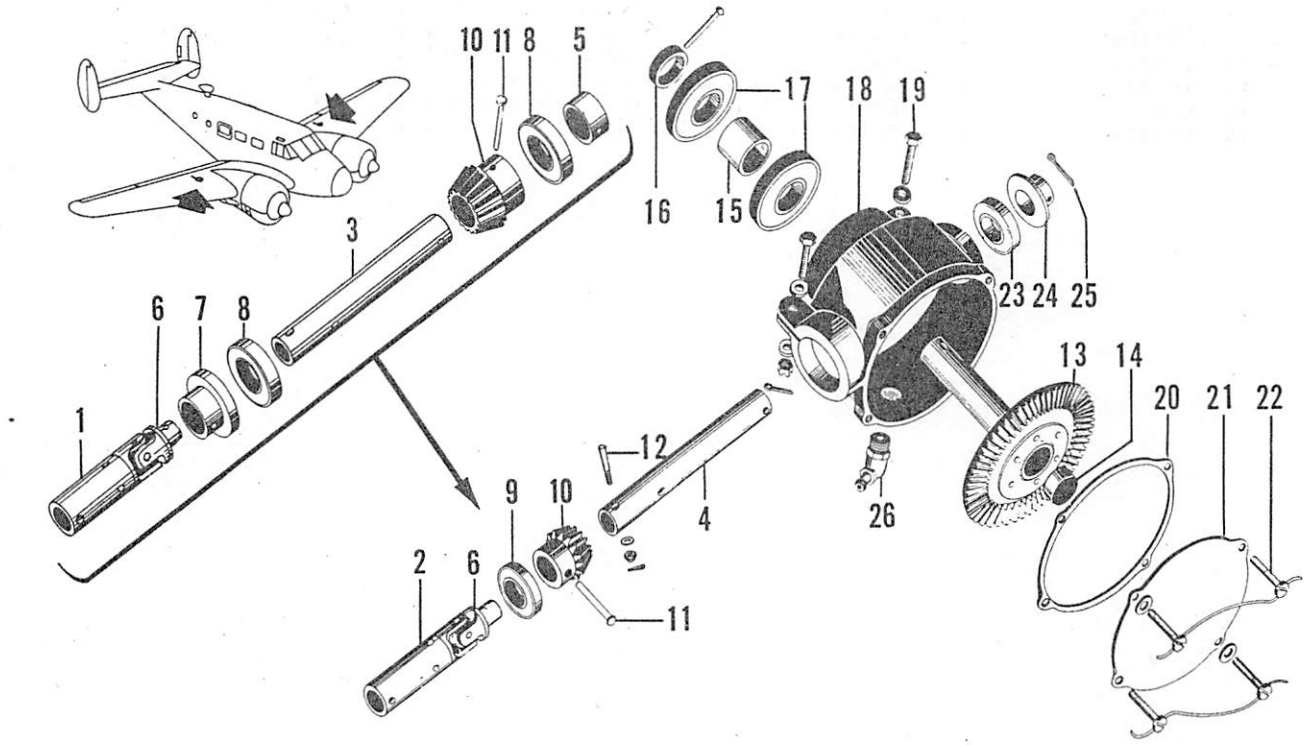

Figure 74. Flap Control Gear Box Assembly

C45H-4-74

FIG. & INDEX NO.	PART NO.	DESCRIPTION 1 2 3 4 5 6 7	UNITS PER ASSY	USABLE ON CODE
74	894-187760	BOX ASSY,FLAP CONTROL GEAR LH . . . . . /SEE FIG. 73 FOR NHA/	REF	
	894-187761	BOX ASSY,FLAP CONTROL GEAR RH . . . . . /SEE FIG. 73 FOR NHA/	REF	
	187764L	. SHAFT ASSY,FLAP CONTROL LH.	1	
	187764R	. SHAFT ASSY,FLAP CONTROL RH.	1	
- 1	187764L-1	. . TUBE,SHAFT ASSY FLAP CONTROL LH . . . . . /DRILL ON INSTL/	1	
- 2	187764R-1	. . TUBE,SHAFT ASSY FLAP CONTROL RH . . . . . /DRILL ON INSTL/	1	
- 3	187764L-3	. . TUBE,SHAFT ASSY FLAP CONTROL LH	1	
- 4	187764R-2	. . TUBE,SHAFT ASSY FLAP CONTROL RH	1	
- 5	187764L-2	. . TUBE,SHAFT ASSY FLAP CONTROL /LH ONLY/. . .	1	
- 6	187752-2	. . UNIVERSAL,FLAP MECHANISM.	1	
- 7	187772	. . COLLAR,FLAP CONTROL LH.	1	
- 8	AN201KP8A	. . BEARING,SHAFT ASSY FLAP CONTROL LH.	2	
- 9	AN201KP8A	. . BEARING,SHAFT ASSY FLAP CONTROL RH.	1	
- 10	187771	. . GEAR,PINION FLAP CONTROL. . . . . /ATTACHING PARTS/	1	
- 11	114698-187-00102	. . PIN	1	
- 12	114698-125-00020	. . PIN	1	
		----*----		

FIG. & INDEX NO.	PART NO.	DESCRIPTION 1 2 3 4 5 6 7	UNITS PER ASSY	USABLE ON CODE
74 - 13	894-187767	• GEAR ASSY,FLAP CONTROL RING	1	
- 14	894-187760-2	• PLUG,FLAP CONTROL RING LH	1	
	894-187761-2	• PLUG,FLAP CONTROL RING RH	1	
- 15	187775-2	• SPACER,BEARING	1	
- 16	187775-4	• COLLAR	2	
- 17	KP-12-A	• BEARING,SHAFT /21335/	1	
- 18	18776-1	• HOUSING,GEAR BOX LH	1	
	18776-4	• HOUSING,GEAR BOX RH		
		/ATTACHING PARTS/		
- 19	AN3-10	• BOLT	2	
	AN960-10	• WASHER	2	
	AN310-3	• NUT	2	
	AN380-2-2	• PIN,COTTER	2	
		----*----		
- 20	18776-3	• GASKET,HOUSING COVER	1	
- 21	18776-2	• COVER,HOUSING	1	
		/ATTACHING PARTS/		
- 22	AN500A416-8	• SCREW	4	
	AN960-416	• WASHER	4	
		----*----		
- 23	KP-8-A	• BEARING,RH /21335/	1	
- 24	187772	• COLLAR,RH	1	
		/ATTACHING PARTS/		
- 25	AN380-4-4	• PIN,COTTER	1	
		----*----		
- 26	Z-36-AA	• FITTING,ZERK /57733/	1	

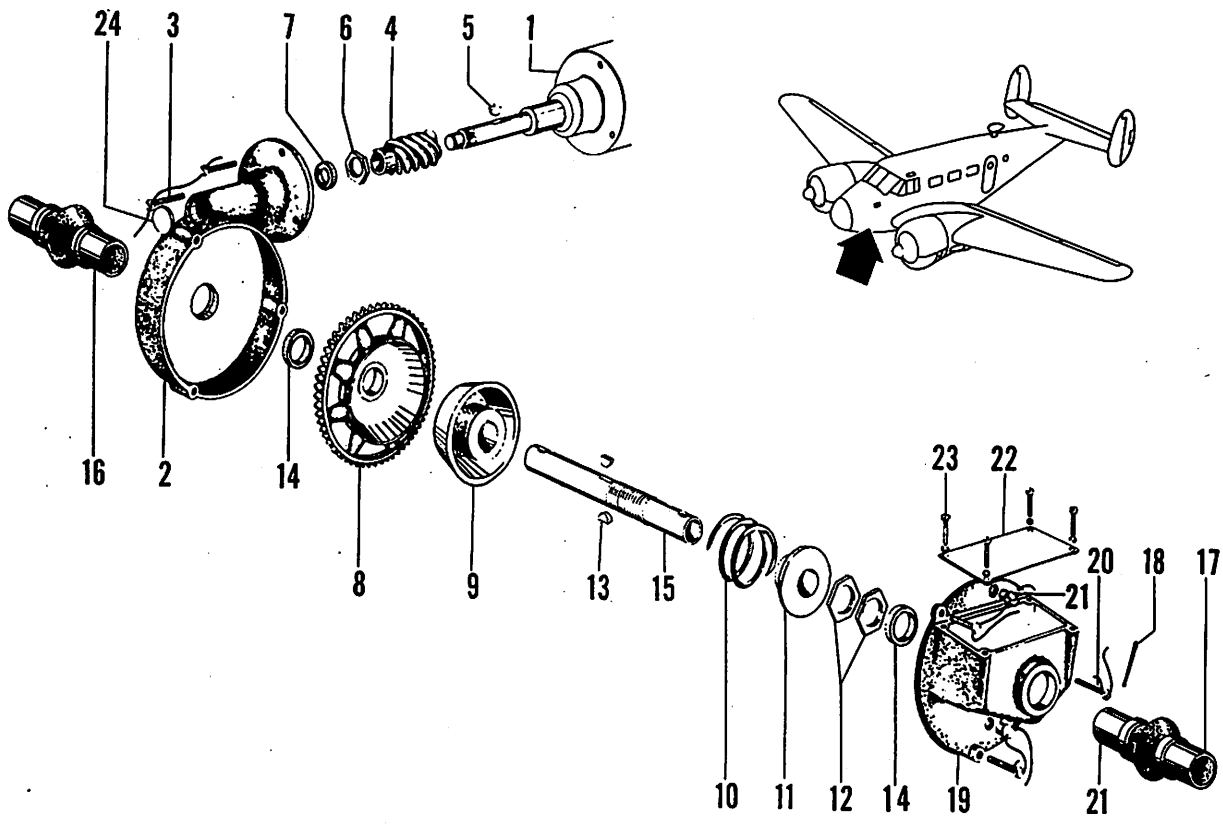

Figure 75. Wing Flap Clutch Mechanism & Motor Assembly C45H-4.75

FIG. & INDEX NO.	PART NO.	DESCRIPTION 1 2 3 4 5 6 7	UNITS PER ASSY	USABLE ON CODE
75	187090-1*	CLUTCH & MOTOR ASSY,FLAP MECHANISM. . . . . /SEE FIG. 72 FOR NHA/	REF	A-1
	187090	CLUTCH & MOTOR ASSY,FLAP MECHANISM. . . . . /SEE FIG. 72 FOR NHA/	REF	B
- 1	804-182626	. MOTOR ASSY,FLAP . . . . . /MAKE FR /75511/ IS13820/	1	
- 2	404045	. HOUSING . . . . . /ATTACHING PARTS/	1	
- 3	AN500A10-8	. SCREW . . . . . ----*----	3	
- 4	187796-1	. WORM,FLAP MECHANISM	1	
- 5	AN280H304	. KEY	1	
- 6	AN316-5R	. NUT	1	
- 7	AN201K4A	. BEARING	1	
- 8	204128	. GEAR,FLAP CLUTCH OVERLOAD	1	
- 9	104129	. CLUTCH,FLAP OVERLOAD.	1	
- 10	104158	. SPRING.	1	
- 11	103902	. WASHER.	1	
- 12	103903	. NUT	2	
- 13	AN280H404	. KEY	2	
- 14	AN201K8A	. BEARING	2	

*LOCK CLUTCH BY TIGHTENING ADJUSTING NUTS UNTIL MOTOR STALLS WHEN FLAP SHAFT IS LOCKED.

FIG. & INDEX NO.	PART NO.	DESCRIPTION 1 2 3 4 5 6 7	UNITS PER ASSY	USABLE ON CODE
75 - 15	203904	. SHAFT,CLUTCH CROSS.	1	
- 16	187797	. UNIVERSAL,CLUTCH SHAFT.	1	
- 18	187809	. UNIVERSAL,CLUTCH SHAFT.	1	
		/ATTACHING PARTS/		
- 18	AN386-1-6A	. PIN	2	
	AN975-3	. WASHER.	2	
	AN364-1032	. NUT	2	
		----*----		
- 19	304127	. CAP,OVERLOAD CLUTCH HOUSING	1	
		/ATTACHING PARTS/		
- 20	AN500A10-8	. SCREW	3	
		----*----		
- 21	AN895B70	. PLUG.	2	
- 22	104156	. COVER,FLAP CLUTCH ADJUSTMENT.	1	
		/ATTACHING PARTS/		
- 23	AN500-6-7	. SCREW	4	
	AN935-6	. WASHER.	4	
		----*----		
- 24	103191A-040-024	. PLUG.	1	

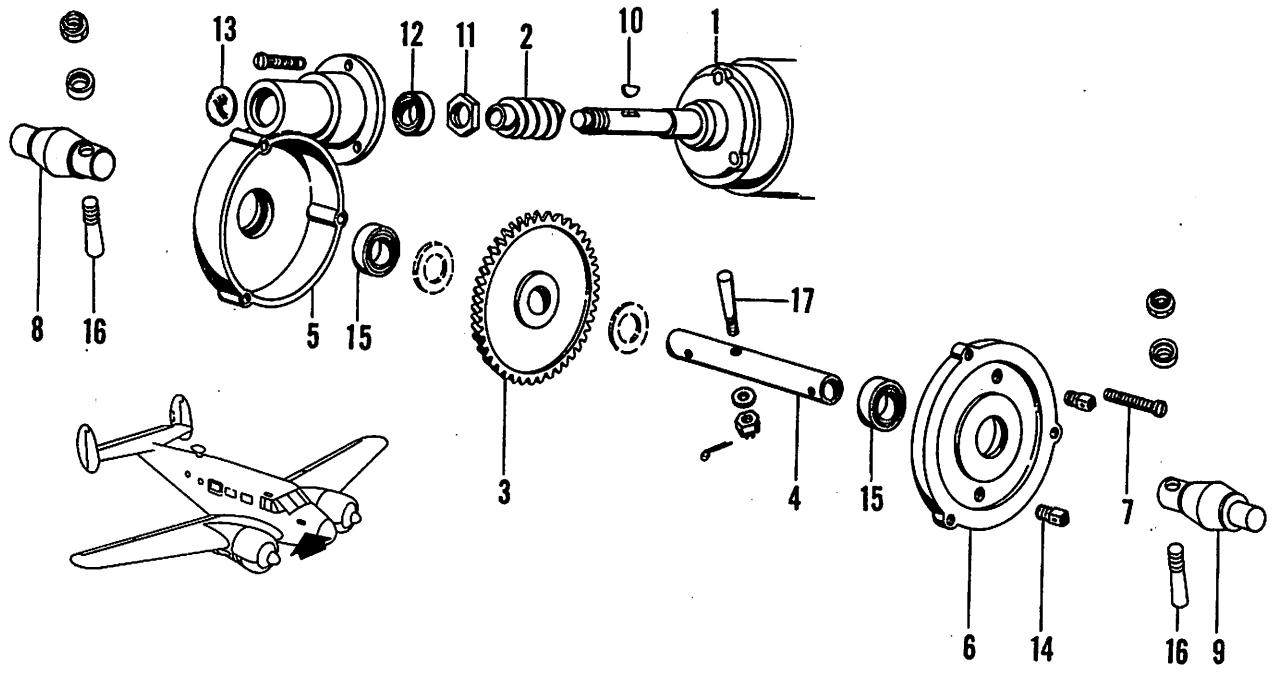

Figure 76. Wing Flap Motor Assembly

C45H-4-76

FIG. & INDEX NO.	PART NO.	DESCRIPTION 1 2 3 4 5 6 7	UNITS PER ASSY	USABLE ON CODE
76	404-187835	MOTOR ASSY,FLAP CONTROL MECHANISM /SEE FIG. 72 FOR NHA/	REF	A-2
- 1	804-182626	. MOTOR ASSY,FLAP	1	
- 2	187796-1	. WORM,FLAP MECHANISM	1	
- 3	187796-2	. GEAR,FLAP MECHANISM	1	
- 4	404-187825	. SHAFT,FLAP GEAR	1	
- 5	404045	. HOUSING,FLAP MOTOR GEAR DRIVE	1	
- 6	187793	. PLATE,FLAP MOTOR GEAR HOUSING COVER	1	
		/ATTACHING PARTS/		
- 7	AN500A10-8	. SCREW	3	
		----*----		
- 8	187797	. UNIVERSAL,WING FLAP MECHANISM	1	
- 9	187809	. UNIVERSAL,WING FLAP MECHANISM	1	
- 10	AN280H304	. KEY	1	
- 11	AN316-5R	. NUT	1	
- 12	AN201K4A	. BEARING	1	
- 13	103191A-040-024	. PLUG	1	
- 14	AN895B70	. PLUG	2	
- 15	AN201K8A	. BEARING	2	
- 16	AN386-1-6A	. PIN,TAPER	2	
	AN975-3	. WASHER	2	
	AN364-1032	. NUT	2	
- 17	187808	. PIN,FLAP MECHANISM TAPER	1	
	AN960-10	. WASHER	1	
	AN310-3	. NUT	1	
	AN380-2-2	. PIN,COTTER	1	

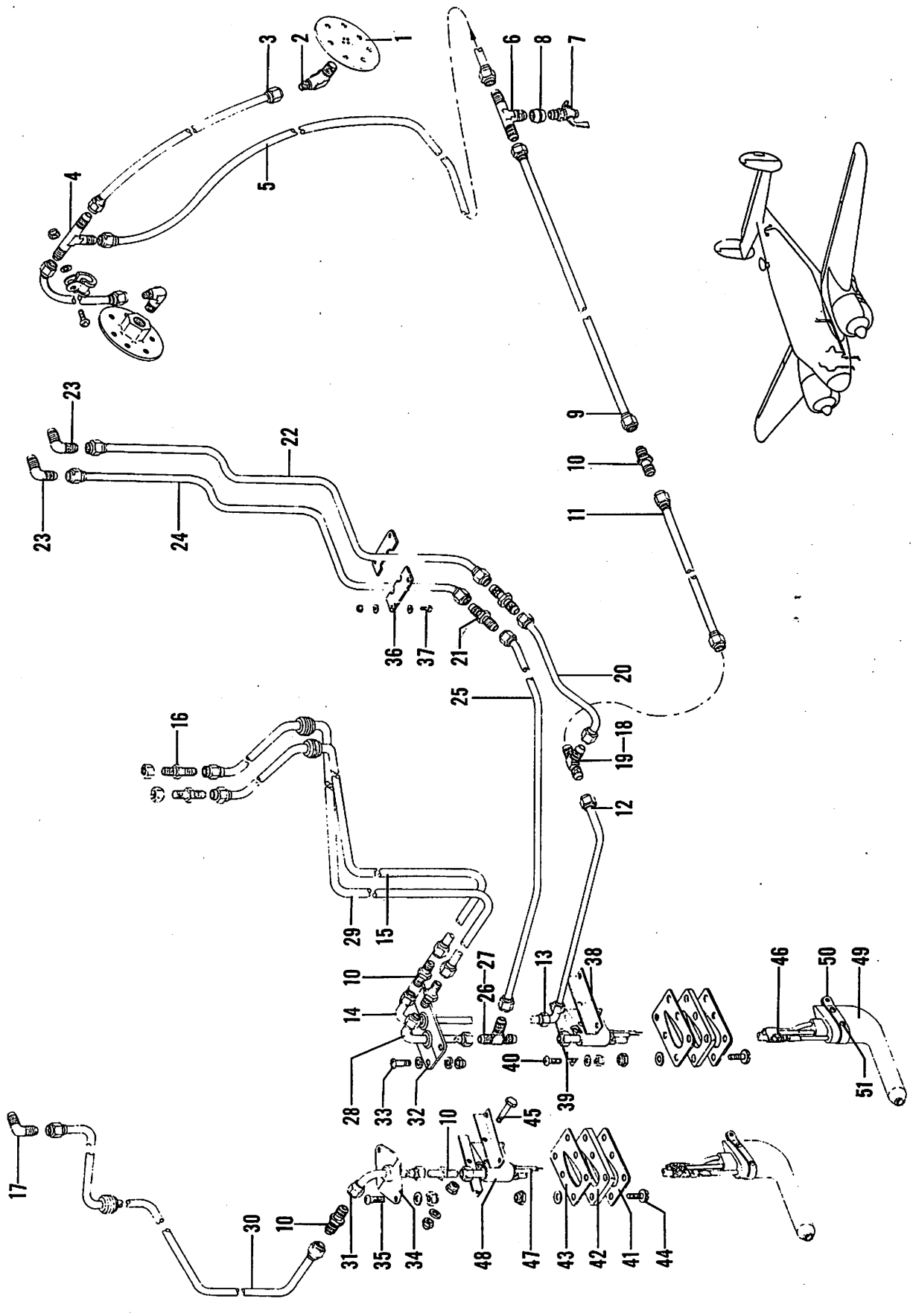

Figure 77. Pitot & Static Pressure Lines Installation

FIG. & INDEX NO.	PART NO.	DESCRIPTION 1 2 3 4 5 6 7	UNITS PER ASSY	USABLE ON CODE
77	694-184720	LINE INSTL,PITOT & STATIC PRESSURE. . . . . /SEE FIG. 1 FOR NHA/	1	A
	694-184730	LINE INSTL,PITOT & STATIC PRESSURE. . . . . /SEE FIG. 1 FOR NHA/	1	B
- 1	42A11521	. PLATE,REINFORCEMENT /82355/	2	
	42A13995	. TUBE,/82355/.	2	
- 2	AN822-4D	. ELBOW,90 DEGREE	2	
- 3	404-184749	. TUBE ASSY,STATIC PRESSURE OUTLET.	2	
- 4	AN824-4D	. TEE	1	
- 5	404-184748	. TUBE ASSY,DRAIN COCK TO CROSSLINE	1	
- 6	AN825-4D	. TEE	1	
- 7	USAF770-A1	. COCK,DRAIN.	1	
- 8	AN910-1D	. COUPLING.	1	
- 9	404-184744	. TUBE ASSY,STATIC PRESSURE AFT	1	
- 10	AN815-4D	. UNION	5	
- 11	694-184743	. TUBE ASSY,STATIC PRESSURE CENTER.	1	
- 12	694-184724	. TUBE ASSY,STATIC PRESSURE LOWER FRONT	1	
- 13	AN821-4D	. ELBOW,90 DEGREE	1	
- 14	694-184725	. TUBE ASSY,STATIC PRESSURE FRONT	1	
- 15	694-184722	. TUBE ASSY,STATIC PRESSURE	1	
- 16	AN832-4D	. UNION,LH.	2	
- 17	AN833-4D.	. ELBOW,90 DEGREE RH.	1	
	AN960-716	. WASHER.	3	
	AN924-4D	. NUT	3	
- 18	AN815-4D	. UNION	1	A
- 19	AN824-4D	. TEE	1	B
- 20	694-184729	. TUBE ASSY,STATIC PRESSURE	1	B
- 21	AN815-4D	. UNION	2	B
- 22	784-184729	. TUBE ASSY,STATIC PRESSURE	1	B
- 23	AN833-4D	. ELBOW,90 DEGREE	2	B
	AN960-716	. WASHER.	2	B
	AN924-4D	. NUT	2	B
- 24	784-184730	. TUBE ASSY,PITOT PRESSURE.	1	B
- 25	694-184728	. TUBE ASSY,PITOT PRESSURE.	1	B
- 26	AN824-4D	. TEE	1	B
- 27	AN815-4D	. UNION	1	A
- 28	694-184726	. TUBE ASSY,PITOT PRESSURE LH	1	
- 29	694-184721	. TUBE ASSY,PITOT PRESSURE LH	1	
- 30	694-184723	. TUBE ASSY,PITOT PRESSURE RH	1	
- 31	694-184727	. TUBE ASSY,PITOT PRESSURE RH	1	
- 32	784-184740	. PLATE,PRESSURE LINE SUPPORT	1	A
	784-184740-2	. PLATE,PRESSURE LINE SUPPORT . . . . . /ATTACHING PARTS/	1	B
- 33	AN526-832R16	. SCREW	4	
	AN960-8	. WASHER.	4	
	AN970-3	. WASHER.	2	
	AN365-832	. NUT	4	
		----*----		
- 34	644-184722	. PLATE,PRESSURE LINE SUPPORT . . . . . /ATTACHING PARTS/	2	
- 35	AN526-832R16	. SCREW	2	
	AN970-3	. WASHER.	2	
	AN365-832	. NUT	2	
		----*----		
- 36	694-184740	. PLATE,PRESSURE LINE SUPPORT . . . . . /ATTACHING PARTS/	1	
- 37	AN526-832R16	. SCREW	4	
	AN960-8	. WASHER.	2	
	AN970-3	. WASHER.	2	
	AN365-832	. NUT	4	
		----*----		

FIG. & INDEX NO.	PART NO.	DESCRIPTION 1 2 3 4 5 6 7	UNITS PER ASSY	USABLE ON CODE
77 - 38	404-184718	. SUPPORT,PITOT MAST.	1	
	404-184718-1	. SUPPORT,PITOT MAST.	1	
- 39	404-184719	. SUPPORT,PITOT MAST.	1	
	404-184719-1	. SUPPORT,PITOT MAST.	1	
		/ATTACHING PARTS/		
- 40	AN526-832-7	. SCREW	2	A
	AN526-832R7	. SCREW	2	B
	AN960-8	. WASHER.	2	
	AN365-832	. NUT	2	
		----*----		
- 41	804-184732-2	. PLATE,PITOT MAST REINFORCEMENT.	2	
- 42	804-184734	. PACKING,PITOT MAST.	2	
- 43	804-184732-4	. PLATE,PITOT MAST REINFORCEMENT.	2	
		/ATTACHING PARTS/		
- 44	AN526-832-10	. SCREW	2	A
	AN526-832R10	. SCREW	2	B
	AN526-832-9	. SCREW	4	A
	AN526-832R9	. SCREW	4	B
	AN960-8	. WASHER.	6	
	AN365-832	. NUT	6	
		----*----		
	404-184757	. MAST ASSY,PITOT	2	
		/ATTACHING PARTS/		
- 45	105982-3A-10-012	. BOLT.	1	
	AN960-10	. WASHER.	1	
	AN365-1032	. NUT	2	
		----*----		
- 46	103990-07-0810	. . LOOM.	1	
- 47	404-184773	. . TUBE ASSY,PITOT MAST.	1	
- 48	404-184757-2	. . MAST,PITOT.	1	
- 49	782-02	. . TUBE,PITOT /75052/.	1	
- 50	184734	. . CLAMP,PITOT MAST.	1	
		/ATTACHING PARTS/		
- 51	AN520-6-5	. . SCREW	2	
	AN935-6	. . WASHER.	2	
		----*----		

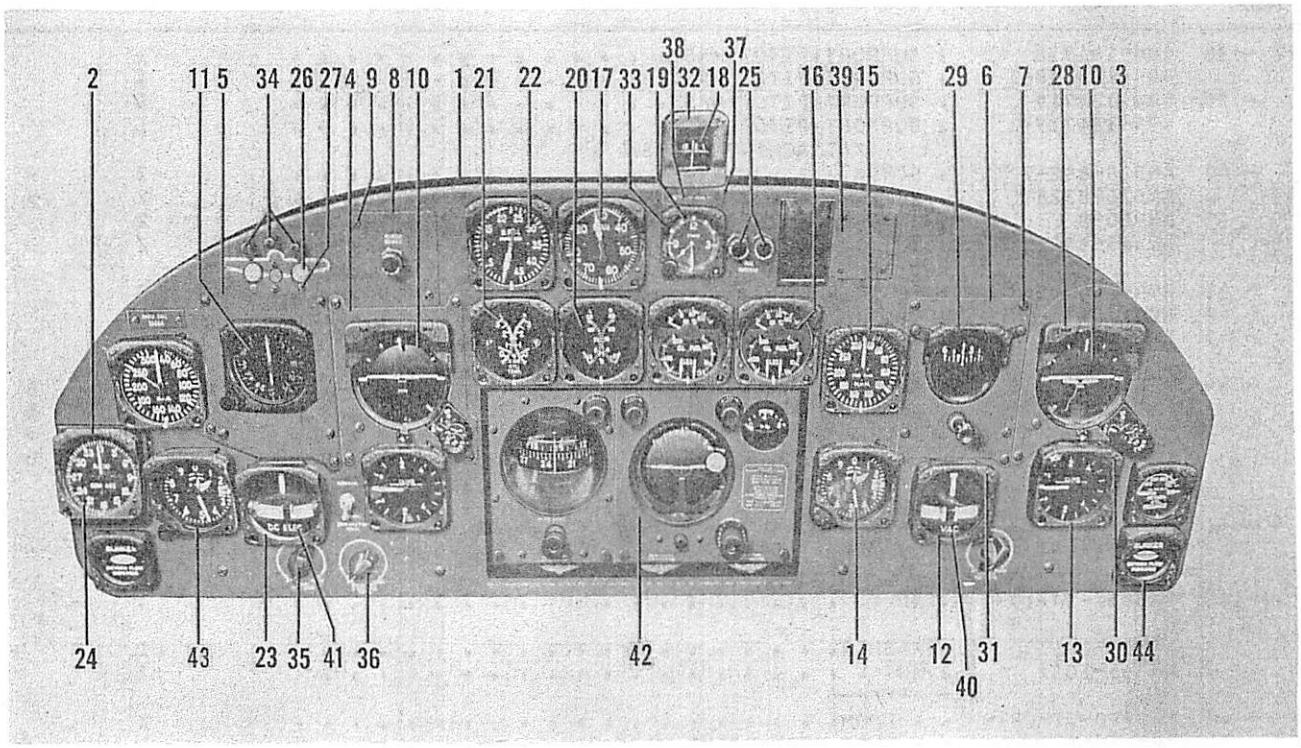

Figure 78. Floating Panel Assembly (C-45H & TC-45H)

C45H-4-78

FIG. & INDEX NO.	PART NO.	DESCRIPTION 1 2 3 4 5 6 7	UNITS PER ASSY	USABLE ON CODE
78	694-183801	PANEL ASSY,FLOATING /SEE FIG. 1 FOR NHA/. . . .	1	A-1,B
- 1	694-183801-4	. PANEL,FLOATING.	1	
- 2	694-183803	. BRACKET,RADIO MAGNETIC INDICATOR.	1	
- 3	694-183804	. ADAPTER,GYRO HORIZON INDICATOR MOUNTING . . .	1	
- 4	694-183808	. ADAPTER,GYRO HORIZON INDICATOR MOUNTING . . .	1	
- 5	694-183806	. ADAPTER,DIRECTIONAL GYRO INDICATOR MOUNTING . /USE UNTIL T.O. 1C-45-511 HAS BEEN COMPLIED WITH/	1	
	694-183809	. ADAPTER,GYROSYN COMPASS REPEATER. . . . . /USE AFTER T.O. 1C-45-511 HAS BEEN COMPLIED WITH/	1	
- 6	694-183807	. ADAPTER,DIRECTIONAL GYRO INDICATOR MOUNTING . /ATTACHING PARTS/	1	
- 7	AN520B10R8	. SCREW	4	
		----*----		
- 8	694-183805	. ADAPTER ASSY,LAMP MOUNTING. . . . . /ATTACHING PARTS/	1	
- 9	AN515B6R6	. SCREW	2	
		----*----		
- 10	AN5736-2A	. INDICATOR,GYRO HORIZON.	2	
- 11	AN5735-2A	. INDICATOR,DIRECTIONAL GYRO. . . . . /USE UNTIL T.O. 1C-45-511 HAS BEEN COMPLIED WITH/	2	
	18520	. INDICATOR,GYROSYN COMPASS . . . . . /USE AFTER T.O. 1C-45-511 HAS BEEN COMPLIED WITH/	1	

FIG. & INDEX NO.	PART NO.	DESCRIPTION 1 2 3 4 5 6 7	UNITS PER ASSY	USABLE ON CODE
78 - 12	AN5820T2	INDICATOR,TURN & BANK	1	
- 13	AN5825T6	INDICATOR,RATE OF CLIMB	2	
- 14	AN5760L4BD	ALTIMETER	2	
- 15	694-183725	INDICATOR,AIRSPEED	2	
- 16	AN5773T1A	GAGE,ENGINE	2	
- 17	AN5770T2A-12	GAGE,MANIFOLD PRESSURE	1	
- 18	AN5766T2*	COMPASS,PILOTS STANDBY MAGNETIC	1	
	AN5766T3*	COMPASS,PILOTS STANDBY MAGNETIC	1	
- 19	AN5743-2**	CLOCK	1	
	AN5743T1A**	CLOCK	1	
- 20	AN5795T6	INDICATOR,CARBURETOR AIR TEMPERATURE	1	
- 21	AN5536T2A	INDICATOR,CYLINDER HEAD TEMPERATURE	1	
- 22	AN5530T2A-12	INDICATOR,ELECTRIC TACHOMETER	1	
- 23	AN5819T4	INDICATOR,ELECTRIC TURN & BANK	1	
- 24	694-180817	INDICATOR,RADIO COMPASS	1	
- 25	AN3157-6	LIGHT ASSY,PRESS TO TEST INDICATOR	2	
- 26	AN5839-1	INDICATOR,LANDING GEAR	3	
		/ATTACHING PARTS/		
- 27	AN515B6R6	SCREW	2	
		-----*-----		
- 28	B-4785-1	FIXTURE,LIGHT /72914/	2	
- 29	4780-1	SHIELD,LIGHT/72914/ /USE UNTIL T.O. 1C-45-511 HAS BEEN COMPLIED WITH/	2	
	4757	SHIELD,LIGHT/72914/ /USE AFTER T.O. 1C-45-511 HAS BEEN COMPLIED WITH/	2	
- 30	B-4756	FIXTURE,LIGHT /72914/	13	
- 31	B-4757	FIXTURE,LIGHT /72914/	1	
- 32	B-4754	FIXTURE,LIGHT /72914/	1	
- 33	B-4880	FIXTURE,LIGHT /72914/	1	
- 34	A-5299-24	FIXTURE,LIGHT /72914/	3	
		/ATTACHING PARTS/		
	AN515B6R20	SCREW	1	
	AN507B632-20	SCREW	4	
	AN507B632R16	SCREW	4	
	AN515B6R16	SCREW	3	
	AN515-6R32	SCREW	1	
		-----*-----		
- 35	AN3155-25-25	RHEOSTAT	2	
- 36	AN3155-25-15	RHEOSTAT	1	
- 37	S54B12994	BRACKET,COMPASS MOUNTING	1	
- 38	55SAA191	DECAL,MAGNETIC COMPASS	1	
- 39	55SAA193	PLATE,COVER	1	
- 40	694-180015	PLACARD,TURN & BANK INDICATOR	1	
- 41	694-180011	PLACARD,ELECTRIC TURN & BANK INDICATOR	1	
- 42	694-183840	STRUCTURE INSTL,GYRO PILOT /SEE FIG. 69/	REF	
- 43	AN6021-1A	GAGE,OXYGEN PRESSURE /SEE FIG. 86/	REF	
- 44	AN6029-1	INDICATOR,OXYGEN FLOW /SEE FIG. 86/	REF	

*THESE PARTS ARE INTERCHANGABLE.
**THESE PARTS ARE INTERCHANGABLE.

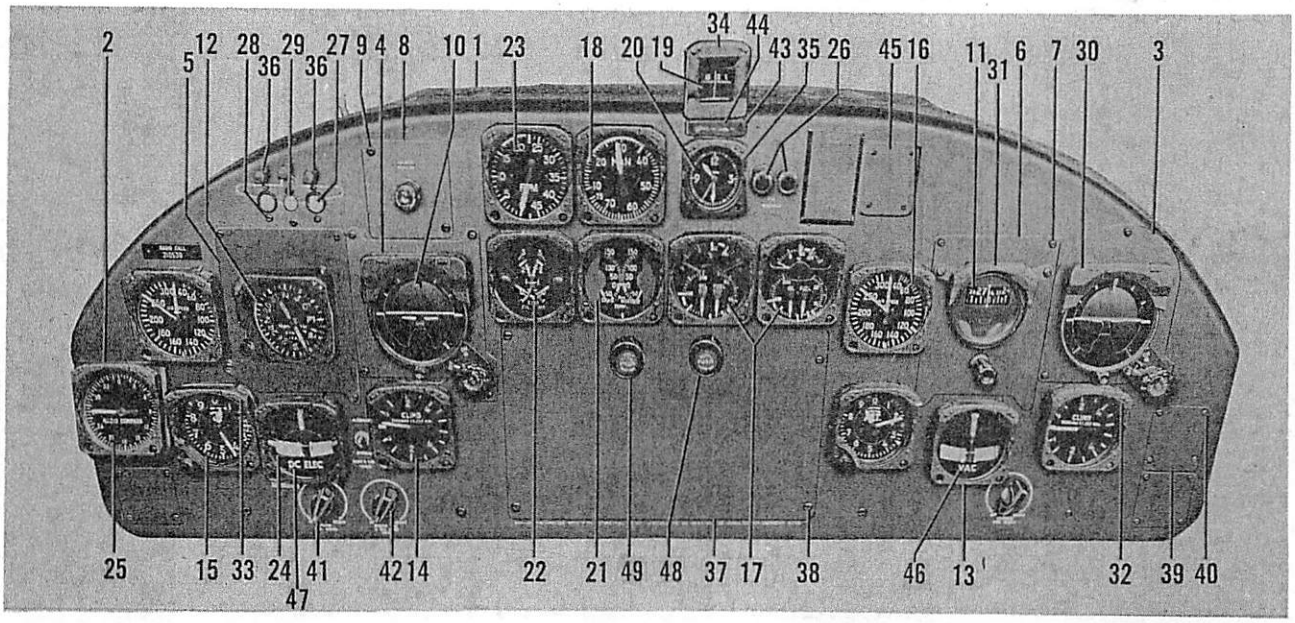

Figure 79. Floating Panel Assembly (C-45H)

C45H-4-79

FIG. & INDEX NO.	PART NO.	DESCRIPTION 1 2 3 4 5 6 7	UNITS PER ASSY	USABLE ON CODE
79	694-183801-28	PANEL ASSY,FLOATING /SEE FIG. 1 FOR NHA/. . . .	1	A-2
- 1	694-183801-4	. PANEL,FLOATING.	1	
- 2	694-183803	. BRACKET,RADIO MAGNETIC INDICATOR.	1	
- 3	694-183804	. ADAPTER,GYRO HORIZON INDICATOR MOUNTING . . .	1	
- 4	694-183808	. ADAPTER,GYRO HORIZON INDICATOR MOUNTING . . .	1	
- 5	694-183809	. ADAPTER,GYRO COMPASS REPEATER MOUNTING. . . .	1	A-2
- 6	694-183807	. ADAPTER,DIRECTIONAL GYRO INDICATOR MOUNTING . /ATTACHING PARTS/	1	
- 7	AN520B10R8	. SCREW . . . . . ----*----	4	
- 8	694-183805	. ADAPTER ASSY,LAMP MOUNTING. . . . . /ATTACHING PARTS/	1	
- 9	AN515B6R6	. SCREW . . . . . ----*----	2	
- 10	AN5736-2A	. INDICATOR,GYRO HORIZON.	2	
- 11	AN5735-2A	. INDICATOR,DIRECTIONAL GYRO /TYPE V-3/	1	
- 12	NO NUMBER	. INDICATOR,GYRO MAGNETIC COMPASS . . . . . /USAF SPECIFICATION 21174/ /GFAE/	1	
- 13	AN5820T2	. INDICATOR,TURN & BANK	1	
- 14	AN5825T6	. INDICATOR,RATE OF CLIMB	2	
- 15	AN5760L4BD	. ALTIMETER	2	
- 16	694-183725	. INDICATOR,AIRSPEED.	2	
- 17	AN5773T1A	. GAGE,ENGINE	2	
- 18	AN5770T2A-12	. GAGE,MANIFOLD PRESSURE.	1	

FIG. & INDEX NO.	PART NO.	DESCRIPTION 1 2 3 4 5 6 7	UNITS PER ASSY	USABLE ON CODE
79 - 19	AN5766T2*	. COMPASS,PILOTS STANDBY MAGNETIC	1	
	AN5766T3*	. COMPASS,PILOTS STANDBY MAGNETIC	1	
- 20	AN5743-2**	. CLOCK	1	
	AN5743T1A**	. CLOCK	1	
- 21	AN5795T6	. INDICATOR,CARBURETOR AIR TEMPERATURE. . . .	1	
- 22	AN5536T2A	. INDICATOR,CYLINDER HEAD TEMPERATURE	1	
- 23	AN5530T2A-12	. INDICATOR,ELECTRIC TACHOMETER	1	
- 24	AN5819T4	. INDICATOR,ELECTRIC TURN & BANK.	1	
- 25	694-180817	. INDICATOR,RADIO COMPASS	1	
- 26	AN3157-6	. LIGHT ASSY,PRESS TO TEST INDICATOR.	2	
- 27	AN5839-1	. INDICATOR,LANDING GEAR POSITION	2	
		/ATTACHING PARTS/		
- 28	AN515B6R6	. SCREW	2	
		----*----		
- 29	50727	. BUTTON,/61864/.	4	A-2
- 30	B-4785-1	. FIXTURE,LIGHT /72914/	2	
- 31	B-4780-1	. FIXTURE,LIGHT /72914/	2	
- 32	B-4756	. FIXTURE,LIGHT /72914/	13	
- 33	B-4757	. FIXTURE,LIGHT /72914/	2	
- 34	B-4754	. FIXTURE,LIGHT /72914/	1	
- 35	B-4880	. FIXTURE,LIGHT /72914/	1	
- 36	A-5299-24	. FIXTURE,LIGHT /72914/	2	
		/ATTACHING PARTS/		
	AN515-6R32	. SCREW	1	
	AN515B6R20	. SCREW	1	
	AN507B632-20	. SCREW	4	
	AN507B1032R16	. SCREW	3	
	AN520B10R20	. SCREW	4	
	AN507B632R16	. SCREW	4	
	AN515B6R16	. SCREW	3	
		----*----		
- 37	694-183801-22	. PLATE,COVER	1	A-2
		/ATTACHING PARTS/		
- 38	AN515B8R6	. SCREW	4	
	AN960D8	. WASHER.	4	
	AN365D832	. NUT	4	
		----*----		
- 39	113209-4	. ADAPTER	3	A-2
		/ATTACHING PARTS/		
- 40	AN515B6R6	. SCREW	4	
	AN960D6	. WASHER.	4	
	AN365D632	. NUT	4	
		----*----		
- 41	AN3155-25-25	. RHEOSTAT.	2	
- 42	AN3155-25-15	. RHEOSTAT.	1	
- 43	S54B12994	. BRACKET,COMPASS MOUNTING.	1	
- 44	55SAA191	. DECAL,MAGNETIC COMPASS.	1	
- 45	55SAA193	. PLATE,COVER	1	
- 46	694-180015	PLACARD,TURN & BANK INDICATOR	1	
- 47	694-180011	PLACARD,ELECTRIC TURN & BANK INDICATOR. . . .	1	
- 48	39116	SWITCH,PROPELLER FEATHERING /73030/	REF	A-2
		/SEE FIG. 40/		
- 49	404-183829	GUARD,PROPELLER FEATHERING SWITCH /SEE FIG. 40/	REF	A-2

*THESE PARTS ARE INTERCHANGEABLE.
**THESE PARTS ARE INTERCHANGEABLE.

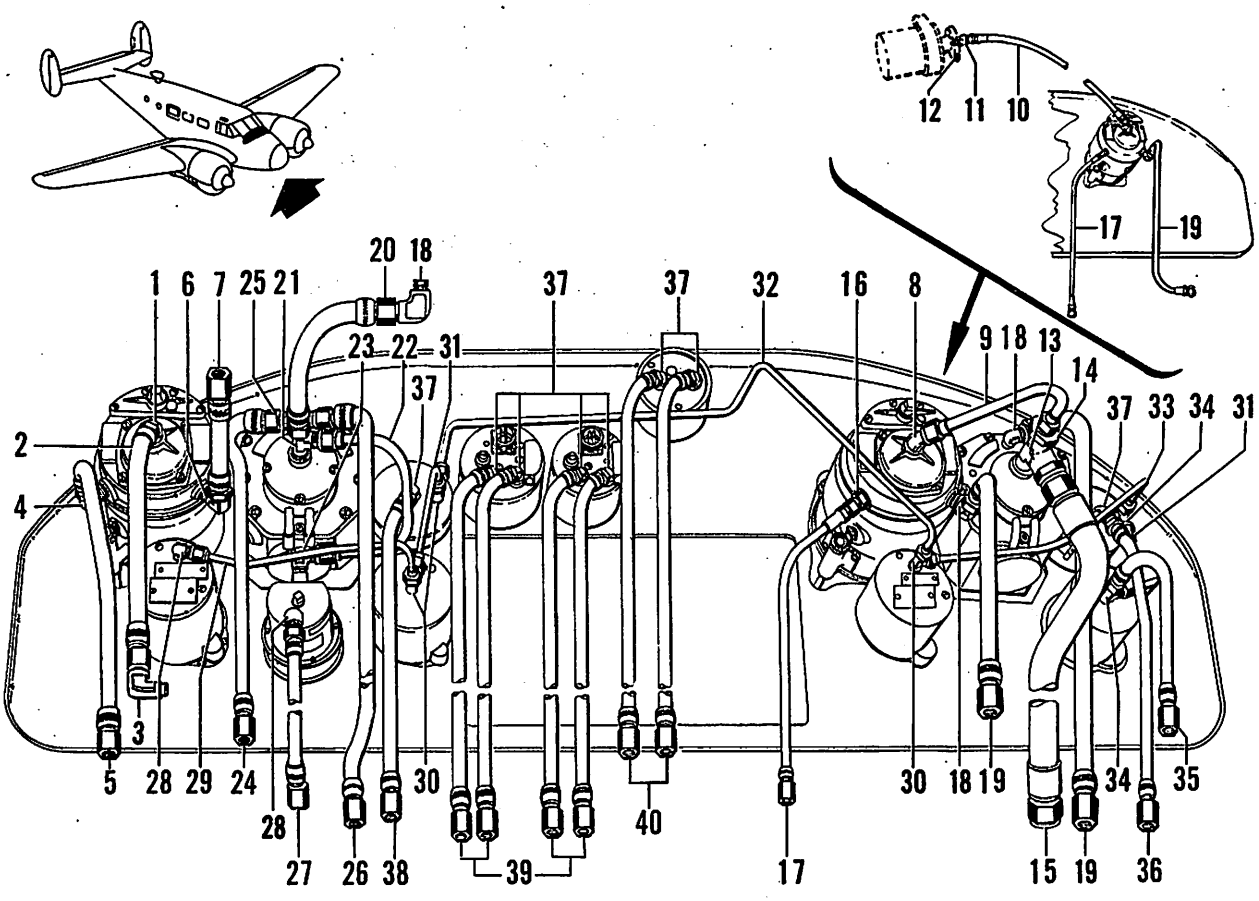

Figure 80. Instrument Piping Assembly

C45H-4-80

FIG. & INDEX NO.	PART NO.	DESCRIPTION 1 2 3 4 5 6 7	UNITS PER ASSY	USABLE ON CODE
80	694-183801	PANEL ASSY,FLOATING /SEE FIG. 78 FOR NHA/	REF	A-1,B
	694-183801-28	PANEL ASSY,FLOATING /SEE FIG. 79 FOR NHA/	REF	A-2
- 1	AN823-6D	. ELBOW,45 DEGREE	1	
- 2	AN6270-6-12-1/2	. HOSE ASSY	1	A-1,B
	AN6270-6-18	. HOSE ASSY	1	A-2
- 3	AN822-6D	. ELBOW,90 DEGREE	2	A-2
- 4	AN822-4D	. ELBOW,90 DEGREE	1	
- 5	AN6270-4-15	. HOSE ASSY	1	
- 6	AN822-6D	. ELBOW,90 DEGREE	1	
- 7	AN6270-6-12-1/2	. HOSE ASSY	1	
- 8	AN823-6D	. ELBOW,45 DEGREE	1	
- 9	694-183884-32	. TUBE ASSY,INSTRUMENT PANEL	1	A-1,B
- 10	AN6270-6-22	. HOSE ASSY,INSTRUMENT PANEL	1	A-2
- 11	AN823-6D	. ELBOW,45 DEGREE	1	A-2
- 12	AN931-2D	. PLUG	1	A-2
- 13	AN926-8D	. TEE	1	A-1,B
- 14	AN816-7D	. ADAPTER	1	A-1,B
	AN902-8	. GASKET	3	A-1,B
	AN919-12D	. REDUCER	1	A-1,B
	AN919-15D	. REDUCER	1	A-1,B
- 15	734-183846	. HOSE ASSY,INSTRUMENT VACUUM	1	A-1,B
- 16	AN816-4-4D	. NIPPLE	1	
- 17	AN6270-4-19	. HOSE ASSY	1	
- 18	AN822-6D	. ELBOW,90 DEGREE	2	A-1,B
	AN822-6D	. ELBOW,90 DEGREE	1	A-2

FIG. & INDEX NO.	PART NO.	DESCRIPTION 1 2 3 4 5 6 7	UNITS PER ASSY	USABLE ON CODE
80 - 19	AN6270-6-15	HOSE ASSY	2	A-1,B
- 20	AN6270-6-15-1/5	HOSE ASSY	1	A-1,B
	AN6270-6-17	HOSE ASSY	1	A-2
- 21	AN826-6D	TEE	1	
- 22	AN6270-6-12	HOSE ASSY	1	
- 23	AN822-6-2D	ELBOW,90 DEGREE	1	
- 24	AN6270-6-19	HOSE ASSY	1	A-1,B
	AN6270-6-17	HOSE ASSY	1	A-2
- 25	AN826-6D	TEE	1	
- 26	AN6270-4-22	HOSE ASSY	1	
	AN894-6-4	BUSHING	1	
- 27	AN6270-4-12	HOSE ASSY	1	
- 28	AN822-4D	ELBOW,90 DEGREE	1	
- 29	694-183884-48	HOSE ASSY,INSTRUMENT PANEL	1	
- 30	AN825-4D	TEE	3	
- 31	AN6270-4-7-1/2	HOSE ASSY	2	
- 32	694-183884-44	HOSE ASSY,INSTRUMENT PANEL	1	
- 33	694-183884-8	HOSE ASSY,INSTRUMENT PANEL	1	
- 34	AN826-4D	TEE	2	
- 35	AN6270-4-10	HOSE ASSY	1	
- 36	AN6270-4-14	HOSE ASSY	1	
- 37	AN823-4D	ELBOW,45 DEGREE	8	
- 38	AN6270-4-15	HOSE ASSY	1	
- 39	AN6270-4-19	HOSE ASSY	4	
- 40	AN6270-4-22	HOSE ASSY	2	

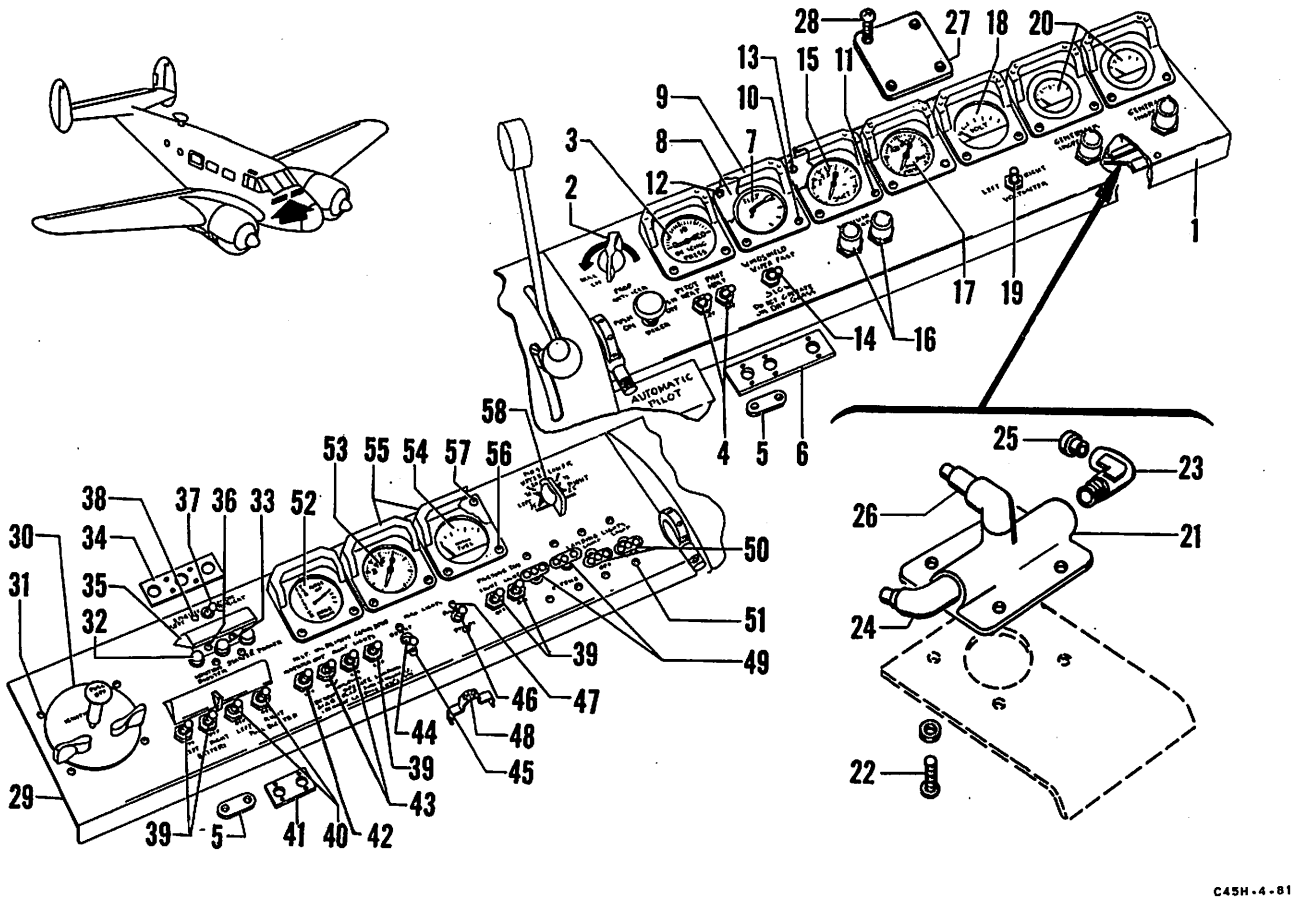

Figure 81. LH & RH Instrument Subpanel Assembly

FIG. & INDEX NO.	PART NO.	DESCRIPTION 1 2 3 4 5 6 7	UNITS PER ASSY	USABLE ON CODE
81	694-183851	SUBPANEL ASSY,INSTRUMENT RH/SEE FIG. 1 FOR NHA/	1	
- 1	694-183853	. SUBPANEL,RH	1	
- 2	AN3155-50-30	. RHEOSTAT.	1	
- 3	AN5771T3A	. GAGE,DE-ICER.	1	
- 4	AN3021-2	. SWITCH.	2	
- 5	734-183855	. BAR,SWITCH BUS.	1	
- 6	112464-4	. STRIP,SWITCH RETAINER	1	
- 7	734-183802	. INDICATOR ASSY,FLAP	1	
- 8	113209-2	. ADAPTER,INSTRUMENT.	1	
- 9	B-4751-1	. SHIELD,/72914/.	7	
		/ATTACHING PARTS/		
- 10	AN515-6-6	. SCREW	7	
- 11	AN515-6-10	. SCREW	3	
- 12	AN507-632-6	. SCREW	7	
- 13	AN507-632-10	. SCREW	3	
	AN960-6	. WASHER.	28	
	NAS487-040	. NUT,SHIM.	6	
	NAS487-14	. NUT,SPEED	6	
		----*----		
- 14	AN3021-1	. SWITCH.	1	
- 15	AN5771T5A	. GAGE,SUCTION /GFAE/	1	
- 16	AN3157-6	. LAMP ASSY,INDICATOR	4	
- 17	AN5771	. GAGE,PRESSURE /GFAE/.	1	A-1,B
- 18	AN3203V30	. VOLTMETER,/GFAE/.	1	
- 19	AN3021-3	. SWITCH.	1	
- 20	NO NUMBER	. AMMETER,/AF TYPE J-1/ /MIL-A-5125/ /GFAE/ . .	2	

FIG. & INDEX NO.	PART NO.	DESCRIPTION 1 2 3 4 5 6 7	UNITS PER ASSY	USABLE ON CODE
81 - 21	AN5829-2	. VALVE	1	
		/ATTACHING PARTS/		
- 22	AN515-8-4	. SCREW	4	
	AN960-8	. WASHER.	4	
		----*----		
- 23	AN822-4D	. ELBOW,90 DEGREE	1	
- 24	AN823-4D	. ELBOW,45 DEGREE	1	
- 25	AN913-1D	. PLUG.	1	
- 26	AN914-1D	. ELBOW,90 DEGREE	1	
- 27	113209-4	. PLATE,COVER	1	A-2
		/ATTACHING PARTS/		
- 28	AN515-6-4	. SCREW	4	
	AN960-6	. WASHER.	4	
	AN365-632	. NUT	4	
		----*----		
	694-183850	SUBPANEL ASSY,INSTRUMENT LH/SEE FIG. 1 FOR NHA/	1	
- 29	694-183862	. SUBPANEL,LH	1	
- 30	AN3213-1A	. SWITCH,IGNITION	1	
		/ATTACHING PARTS/		
- 31	AN526-632-10	. SCREW	4	
		----*----		
- 32	138143	. SWITCH,IGNITION BOOSTER /78947/	2	
- 33	138143E	. SWITCH,STARTER /78947/.	1	
- 34	407-183877	. BLOCK,SUBPANEL SWITCH SUPPORT	1	
- 35	407-183878	. COVER ASSY,STARTER SWITCH	1	
		/ATTACHING PARTS/		
- 36	AN526-632-10	. SCREW	2	
	AN960-6	. WASHER.	4	
	AN365-632	. NUT	2	
		----*----		
- 37	AN3226-1	. SWITCH,ENGINE SELECTOR.	1	
		/ATTACHING PARTS/		
- 38	AN526-632-5	. SCREW	2	
		----*----		
- 39	AN3021-2	. SWITCH.	5	
	734-183855	. BAR,SWITCH BUS.	2	
	112464-2	. STRIP,SWITCH RETAINER	2	
- 40	AN3027-3	. SWITCH.	2	
- 41	694-183855	. STRIP,SWITCH RETAINER	1	
- 42	AN3027-2	. SWITCH.	1	
- 43	AN3021-8	. SWITCH.	2	
	112464-4	. STRIP,SWITCH RETAINER	1	
- 44	AN3226-2	. SWITCH.	1	
		/ATTACHING PARTS/		
- 45	AN526-632-5	. SCREW	2	
		----*----		
- 46	AN3227-1	. SWITCH.	1	
		/ATTACHING PARTS/		
- 47	AN526-632-5	. SCREW	2	
		----*----		
- 48	694-183821	. BAR,TERMINAL BUS.	1	
- 49	AN3022-15B	. SWITCH.	2	
- 50	AN3022-4B	. SWITCH.	2	
		/ATTACHING PARTS/		
- 51	AN526-632-5	. SCREW	8	
		----*----		
- 52	894-183797	. INDICATOR ASSY,ELEVATOR TAB POSITION.	1	
	113209-2	. ADAPTER,INSTRUMENT.	1	
- 53	AN5771T5A	. GAGE,SUCTION /GFAE/	1	
- 54	EA-102AN-10	. GAGE,FUEL /36536/ /GFAE/.	1	
- 55	B-4751-1	. SHIELD,/72914/.	3	
		/ATTACHING PARTS/		
- 56	AN515-6-10	. SCREW	2	
- 57	AN507-632-10	. SCREW	2	
	AN365-632	. NUT	2	
		----*----		
- 58	734-183826	. SWITCH ASSY,FUEL GAGE SELECTOR.	1	

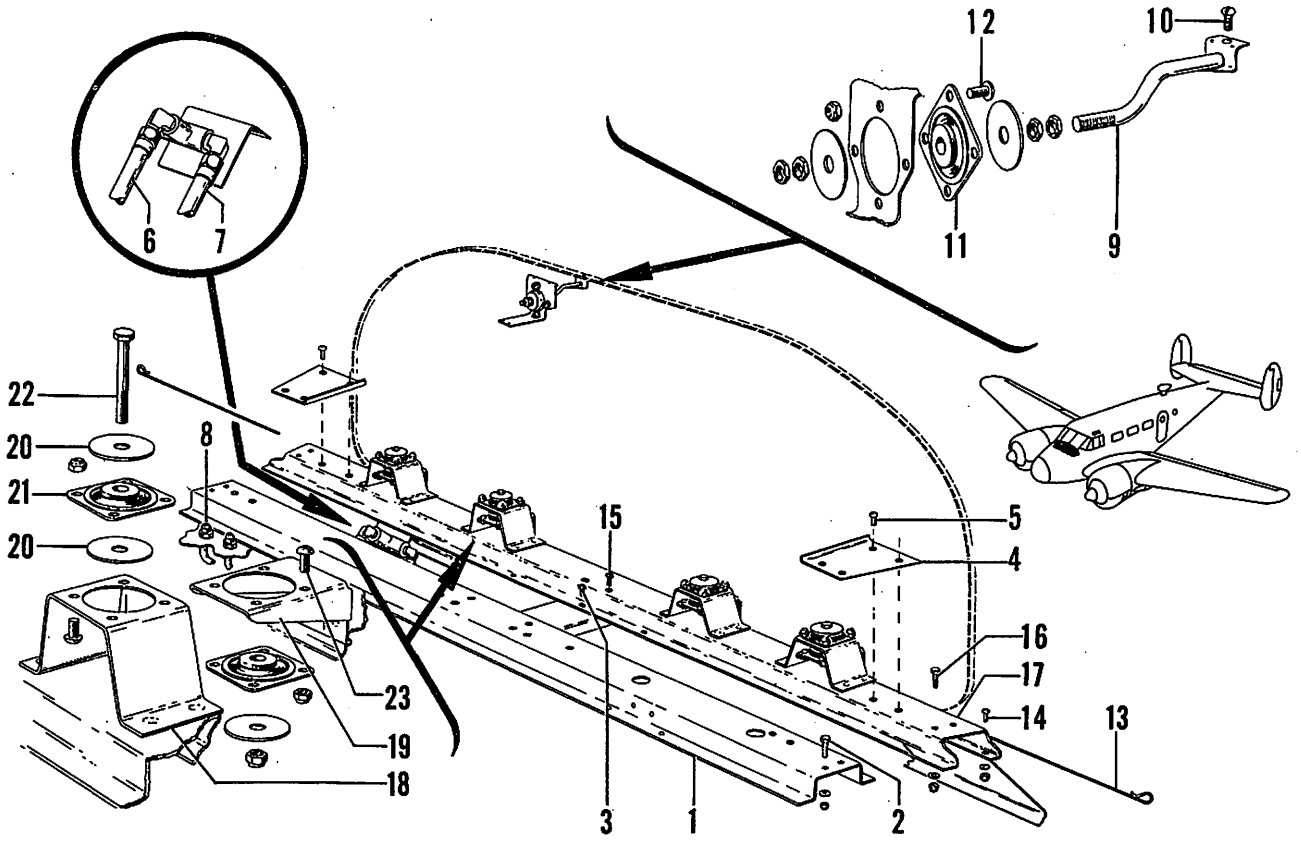

Figure 82. Instrument Panel Installation

C45H-4-82

FIG. & INDEX NO.	PART NO.	DESCRIPTION 1 2 3 4 5 6 7	UNITS PER ASSY	USABLE ON CODE
82	694-183802	PANEL INSTL,INSTRUMENT /SEE FIG. 1 FOR NHA/	1	
- 1	694-187031	. CHANNEL ASSY,INSTRUMENT	1	A-2
		/ATTACHING PARTS/		
- 2	AN3-4A	. BOLT	4	
- 3	AN515-8R8	. BOLT	2	
	AN960-10L	. WASHER	4	
	AN960-8	. WASHER	2	
	AN365-1032	. NUT	4	
	AN365-832	. NUT	2	
		----*----		
- 4	694-183822-1	. BRACKET,LH	1	
	694-183822-2	. BRACKET,RH	1	
		/ATTACHING PARTS/		
- 5	AN515-8R8	. SCREW	4	
		----*----		
- 6	694-183884-52	. TUBE ASSY,INSTRUMENT VACUUM CONTROL	1	
- 7	694-183884-56	. TUBE ASSY,INSTRUMENT VACUUM CONTROL	1	
- 8	AN832-4D	. UNION	2	
- 9	694-183801-12	. ROD ASSY,INSTRUMENT PANEL SUPPORT	1	
		/ATTACHING PARTS/		
- 10	NO NUMBER	. SCREW,1032 X 5/8 INCH OVAL HEAD	1	
	AN8013D2	. WASHER	4	
	AN345B416	. NUT	2	
		----*----		

FIG. & INDEX NO.	PART NO.	DESCRIPTION 1 2 3 4 5 6 7	UNITS PER ASSY	USABLE ON CODE
82 - 11	AN8008D10	• INSULATOR,VIBRATION /ATTACHING PARTS/	1	
- 12	AN515B8R7	• SCREW	4	
	AN960A8L	• WASHER	4	
	AN365B832A	• NUT	4	
		----*----		
- 13	102361-01300	• PIN,HINGE	2	
	734-183834	• STRUCTURE ASSY,INSTRUMENT PANEL MOUNT /ATTACHING PARTS/	1	
- 14	AN515-8R8	• SCREW	2	
- 15	AN515-8R7	• SCREW	18	
	AN960-8L	• WASHER	20	
	AN365-832	• NUT	20	
- 16	AN3-4A	• BOLT	4	
	AN960-10L	• WASHER	4	
	AN365-1032	• NUT	4	
		----*----		
- 17	734-183834-4	• • CHANNEL,INSTRUMENT PANEL MOUNT	1	
	734-183834-2	• • SUPPORT ASSY,INSTRUMENT PANEL MOUNT	4	
- 18	734-183834-6	• • • SUPPORT,INSTRUMENT PANEL MOUNT	1	
- 19	734-183834-8	• • • BRACKET,INSTRUMENT PANEL MOUNT	1	
- 20	AN8013D2	• • • WASHER,VIBRATION INSULATOR	3	
- 21	AN8008D10	• • • INSULATOR,VIBRATION /ATTACHING PARTS/	2	
- 22	AN4-16A	• • • BOLT	1	
	AN365-428	• • • NUT	1	
- 23	AN515-8R7	• • • SCREW	8	
	AN960-8	• • • WASHER	8	
	AN365-832	• • • NUT	8	
		----*----		

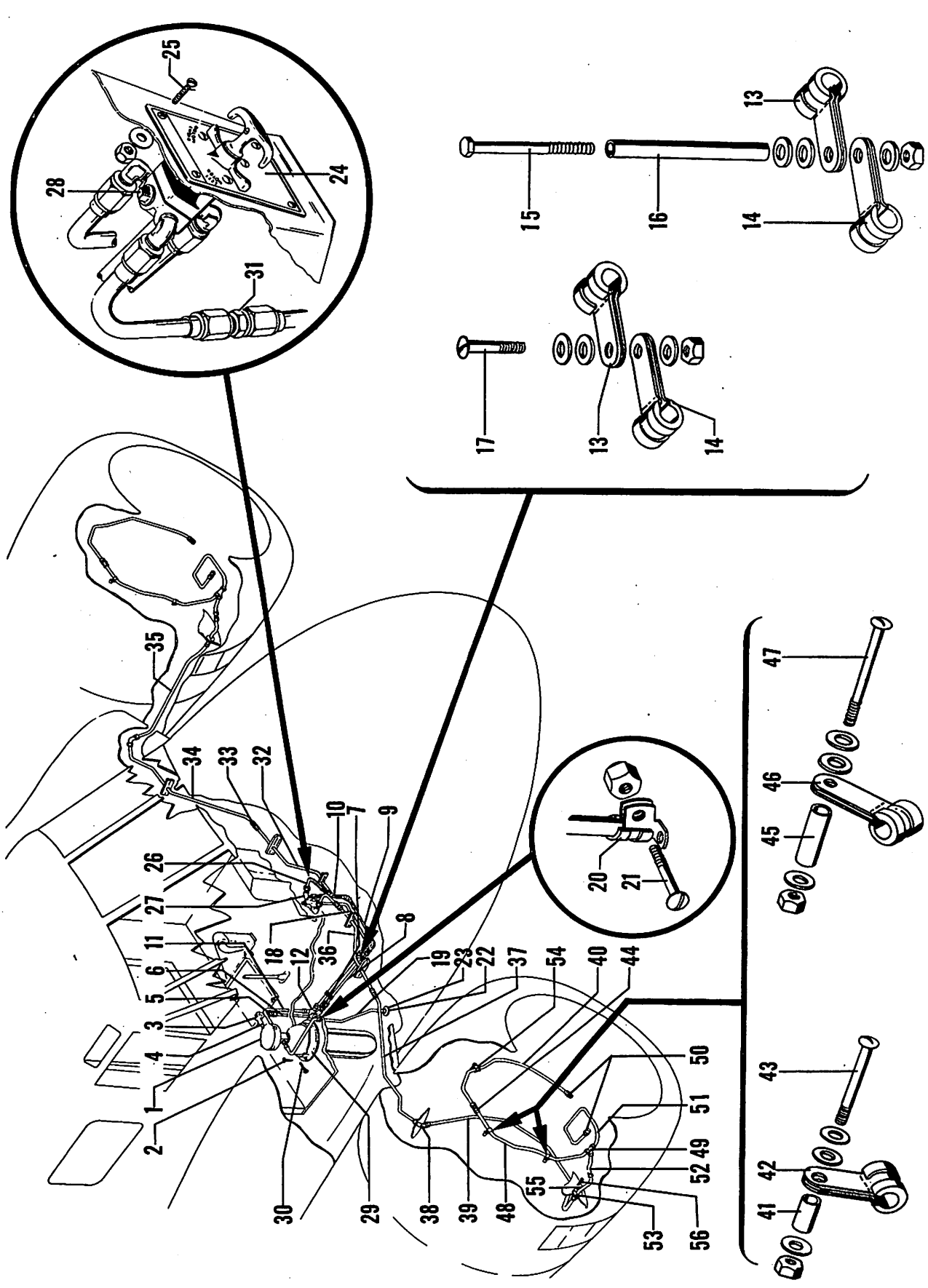

Figure 83. Fire Extinguisher Installation

FIG. & INDEX NO.	PART NO.	DESCRIPTION 1 2 3 4 5 6 7	UNITS PER ASSY	USABLE ON CODE
83	694-183185	EXTINGUISHER INSTL,FUSELAGE & WING FIRE /SEE FIG. 1 FOR NHA/	1	A-1,B
- 1	981557	. CYLINDER & VALVE ASSY,/33525/	1	A-1,B
	28X-1598*	. CYLINDER,/TYPE PE/ /02413/	1	A-1,B
	920775*	. VALVE ASSY,/02413/ /ATTACHING PARTS/	1	A-1,B
- 2	AN526-832-16	. SCREW	4	
		----*----		
- 3	20400	. PULLEY,/33525/	2	A-1,B
- 4	AN911-1D	. NIPPLE	2	A-1,B
- 5	AN816-4D	. NIPPLE	3	A-1,B
- 6	894-183188	. TUBE ASSY,CONTROL CABLE REAR	1	A-1,B
- 7	933585	. PULLEY,/33525/	3	A-1,B
- 8	894-183189	. TUBE ASSY,CONTROL CABLE OUTBD	1	A-1,B
- 9	894-183190	. TUBE ASSY,CONTROL CABLE INBD	1	A-1,B
- 10	734-183193	. TUBE ASSY,CONTROL CABLE INBD	1	A-1,B
- 11	894-183186	. TUBE ASSY,DISCHARGE LINE REAR	1	A-1,B
- 12	AN821-8D	. ELBOW,90 DEGREE	2	A-1,B
- 13	AN742D6C	. CLAMP	2	A-1,B
- 14	AN742D10C	. CLAMP /ATTACHING PARTS/	2	A-1,B
- 15	AN3-27A	. BOLT	1	
- 16	102933-P4-0438-2375	. SPACER	1	
- 17	AN520-10-8	. SCREW	1	
	AN960-10L	. WASHER	1	
	AN960-10	. WASHER	2	
	AN365-1032	. NUT	2	
		----*----		
- 18	894-183187	. TUBE ASSY,DISCHARGE LINE FRONT	1	A-1,B
	AN816-8D	. NIPPLE	1	A-1,B
- 19	894-183191	. TUBE ASSY,DISCHARGE INDICATOR	1	A-1,B
- 20	758-4	. CLAMP,/00502/ /ATTACHING PARTS/	1	A-1,B
- 21	AN520-10-8	. SCREW	1	
	AN365-1032	. NUT	1	
	AN960-10	. WASHER	1	
		----*----		
- 22	41A4178	. INDICATOR,/33525/	1	A-1,B
- 23	AN816-4D	. NIPPLE	1	A-1,B
- 24	27082**	. PANEL,CONTROL /33116/	1	A-1,B
	919475**	. PANEL,CONTROL /33525/ /ATTACHING PARTS/	1	A-1,B
- 25	AN526-832-8	. SCREW	4	
	AN960-8	. WASHER	4	
	AN365-832	. NUT	4	
		----*----		
- 26	734-183197***	. TUBE ASSY,FUSELAGE FIRE EXTINGUISHER UPPER LH	2	A-1,B
	407-183156****	. TUBE ASSY,FUSELAGE FIRE EXTINGUISHER UPPER LH	2	A-1,B
- 27	AN822-8D	. ELBOW,90 DEGREE	2	A-1,B
- 28	AN913-3D	. PLUG	1	A-1,B
	734-183199***	. TUBE ASSY,CONTROL CABLE FWD	1	A-1,B

*28X-1598 CYLINDER & 920775 VALVE ASSY ARE USED WHEN 981557 CYLINDER & VALVE ARE NOT AVAILABLE.
**THESE PARTS ARE INTERCHANGEABLE.
***USE WITH 919475 CONTROL PANEL.
****USE WITH 27082 CONTROL PANEL.

FIG. & INDEX NO.	PART NO.	DESCRIPTION 1 2 3 4 5 6 7	UNITS PER ASSY	USABLE ON CODE
83 - 29	734-183182	• SUPPORT ASSY,FIRE EXTINGUISHER BOTTLE • • • • /ATTACHING PARTS/	1	A-1,B
- 30	AN3-16	• BOLT• •	1	
	AN310-3	• NUT •	1	
	AN380-2-2	• PIN,COTTER• • • • • • • • • • • • • • • • • •	1	
		----*----		
- 31	AN815-8D	• UNION •	2	A-1,B
- 32	407-183153	• TUBE ASSY,FUSELAGE FIRE EXTINGUISHER LH • • •	1	A-1,B
- 33	AN832-8D	• UNION •	2	A-1,B
	AN924-8D	• NUT •	2	A-1,B
	AN960A1216	• WASHER• • • • • • • • • • • • • • • • • • • •	4	A-1,B
- 34	407-183155	• TUBE ASSY,ROOT RIB FIRE EXTINGUISHER LH • • •	1	A-1,B
- 35	407-183157	• TUBE ASSY,NACELLE FIRE EXTINGUISHER LH• • • •	1	A-1,B
- 36	407-183158	• TUBE ASSY,FUSELAGE FIRE EXTINGUISHER RH • • •	1	A-1,B
- 37	407-183159	• TUBE ASSY,ROOT RIB FIRE EXTINGUISHER RH • • •	1	A-1,B
- 38	AN837-8D	• ELBOW,45 DEGREE • • • • • • • • • • • • • • •	2	A-1,B
	AN924-8D	• NUT •	2	A-1,B
	AN960A1216	• WASHER• • • • • • • • • • • • • • • • • • • •	4	A-1,B
- 39	407-183162	• TUBE ASSY,NACELLE FIRE EXTINGUISHER RH• • • •	1	A-1,B
	189450P	LINE INSTL,ENGINE COMPARTMENT FIRE EXTINGUISHER /SEE FIG. 1 FOR NHA/	2	A-1,B
- 40	189396	• TUBE ASSY,FIRE EXTENSION DISCHARGE• • • • •	1	A-1,B
- 41	100696-D16-06-012	• SPACER• • • • • • • • • • • • • • • • • • • •	2	A-1,B
- 42	AN742D7	• CLAMP • /ATTACHING PARTS/	2	A-1,B
- 43	AN515-8-12	• SCREW •	1	
	AN960-8	• WASHER• • • • • • • • • • • • • • • • • • • •	2	
	AN935-8	• WASHER,LOCK • • • • • • • • • • • • • • • • •	1	
	AN340-8	• NUT •	1	
		----*----		
- 44	AAF811-HT-8D	• UNION •	1	A-1,B
- 45	100696-D16-06-024	• SPACER• • • • • • • • • • • • • • • • • • • •	4	A-1,B
- 46	AN742D7	• CLAMP • /ATTACHING PARTS/	4	A-1,B
- 47	AN515-8-20	• SCREW •	1	
	AN935-8	• WASHER,LOCK • • • • • • • • • • • • • • • • •	1	
	AN960-8	• WASHER• • • • • • • • • • • • • • • • • • • •	2	
	AN340-8	• NUT •	1	
		----*----		
- 48	189399	• TUBE ASSY,FIRE EXTINGUISHER DISCHARGE • • • •	1	A-1,B
- 49	AAF811-JT-8	• TEE •	1	A-1,B
- 50	8PNT	• PLUG,/45681/• • • • • • • • • • • • • • • • •	2	A-1,B
- 51	189398	• TUBE ASSY,FIRE EXTINGUISHER CARB DISCHARGE• •	1	A-1,B
- 52	189397	• TUBE ASSY,FIRE EXTINGUISHER OUTLET DISCHARGE•	1	A-1,B
- 53	AAF811-FT-8	• NIPPLE• • • • • • • • • • • • • • • • • • • •	1	A-1,B
- 54	189460P-2	• CLAMP •	2	A-1,B
- 55	37B6535	• HOSE,FIREWALL FLEXIBLE /GFAE/ • • • • • • • • /ATTACHING PARTS/	1	A-1,B
- 56	AN515-6-6	• SCREW •	6	
	AN960-6	• WASHER• • • • • • • • • • • • • • • • • • • •	6	
	22M62	• NUT,ELASTIC STOP /72962/• • • • • • • • • • •	6	
		----*----		

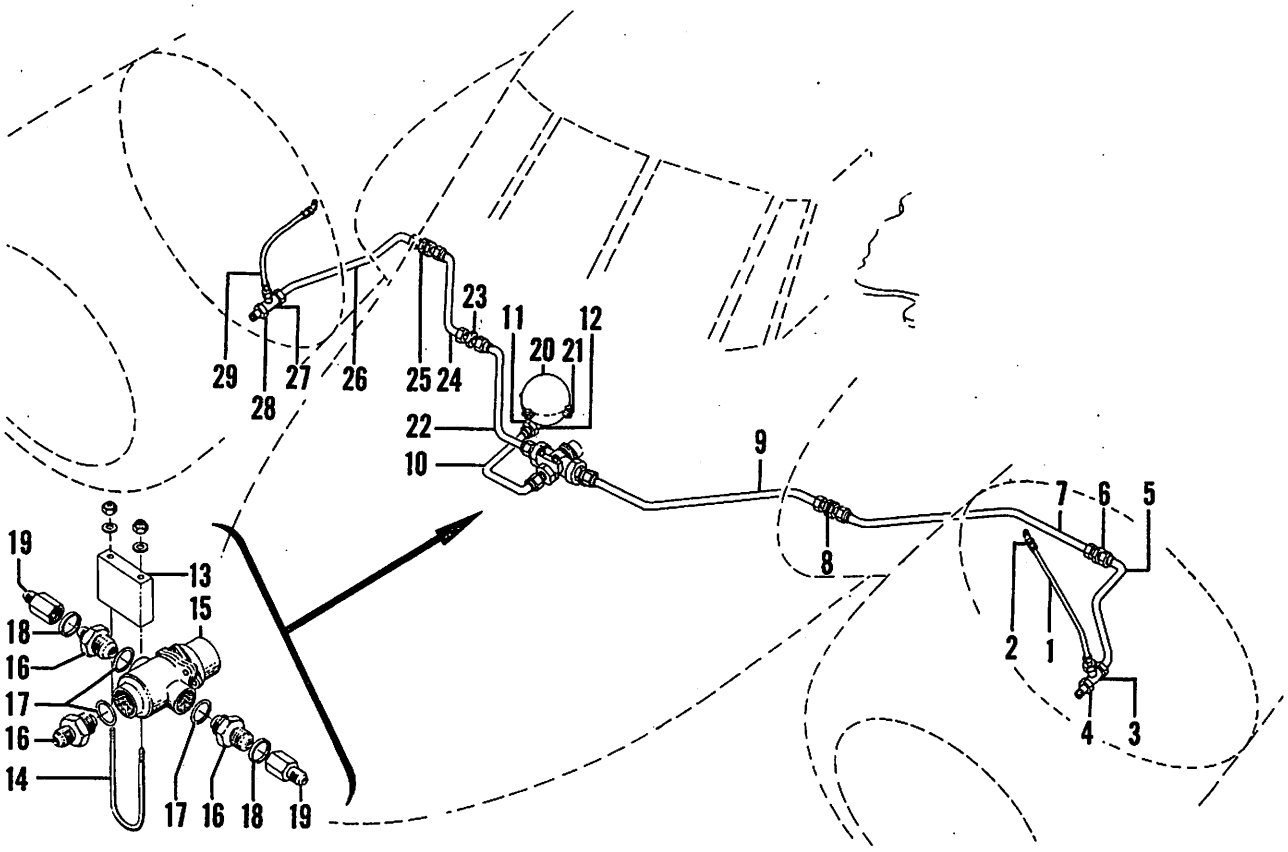

Figure 84. Fuselage CB Fire Extinguisher Installation

C45H-4-84

FIG. & INDEX NO.	PART NO.	DESCRIPTION 1 2 3 4 5 6 7	UNITS PER ASSY	USABLE ON CODE
84	694-183190	EXTINGUISHER INSTL,FUSELAGE CB FIRE /SEE FIG. 1 FOR NHA/	1	A-2
- 1	694-183169	. TUBE ASSY,LEFT RADIATOR DUCT DISCHARGE LINE	1	A-2
- 2	AN837-8D	. ELBOW,45 DEGREE	2	A-2
	AN924-8D	. NUT	2	A-2
	AN960D1216	. WASHER	4	A-2
- 3	AN804-10D	. TEE	1	A-2
- 4	694-183168	. ADAPTER	1	A-2
- 5	694-183175-45	. TUBE ASSY,LEFT ENGINE DISCHARGE LINE	1	A-2
- 6	AN815-10D	. UNION	2	A-2
- 7	694-183175-37	. TUBE ASSY,LEFT ENGINE DISCHARGE LINE	1	A-2
- 8	AN832-10D	. UNION	2	A-2
	AN960D1416	. WASHER	4	A-2
	AN924-10D	. NUT	4	A-2
- 9	694-183175-29	. TUBE ASSY,LEFT ENGINE DISCHARGE LINE	1	A-2
- 10	694-183186	. TUBE ASSY,CYLINDER DISCHARGE LINE	1	A-2
- 11	AN919-25D	. REDUCER	1	A-2
- 12	AN902B20	. GASKET	1	A-2
- 13	694-183189	. BLOCK /ATTACHING PARTS/	1	A-2
- 14	694-183188	. BOLT	1	
	AN960-416L	. WASHER	2	
	AN365-428	. NUT	2	
		-----*-----		

FIG. & INDEX NO.	PART NO.	DESCRIPTION 1 2 3 4 5 6 7	UNITS PER ASSY	USABLE ON CODE
84 - 15	2CD-6362	. VALVE,DIRECTIONAL /02413/ /GFAE/.	1	A-2
- 16	AN919-25D	. REDUCER	3	A-2
- 17	AN6227-27	. GASKET.	3	A-2
- 18	AN902B10	. GASKET.	2	A-2
- 19	AN894D12-10	. BUSHING	2	A-2
- 20	2CD-6440	. SPHERE,CB /02413/ /GFAE/.	1	A-2
	870271	. SPHERE,CB /ALTERNATE FOR /02314/ 2CB-644/ . . /GFAE/ /ATTACHING PARTS/	1	A-2
- 21	AN5-13A	. BOLT.	4	
	102933-D6-0500-0437	. SPACER.	4	
	AN960-516	. WASHER.	4	
	AN365-524	. NUT	4	
		----*----		
- 22	694-183175-25	. TUBE ASSY,RIGHT ENGINE DISCHARGE LINE	1	A-2
- 23	AN832-10D	. UNION	1	A-2
	AN960D1416	. WASHER.	2	A-2
	AN924-10D	. NUT	2	A-2
- 24	694-183175-33	. TUBE ASSY,RIGHT ENGINE DISCHARGE LINE	1	A-2
- 25	AN815-10D	. UNION	2	A-2
- 26	694-183175-41	. TUBE ASSY,RIGHT ENGINE DISCHARGE LINE	1	A-2
- 27	AN804-10D	. TEE	1	A-2
- 28	694-183168	. ADAPTER	1	A-2
- 29	694-183170	. TUBE ASSY,RIGHT RADIATOR DUCT DISCHARGE LINE.	1	A-2

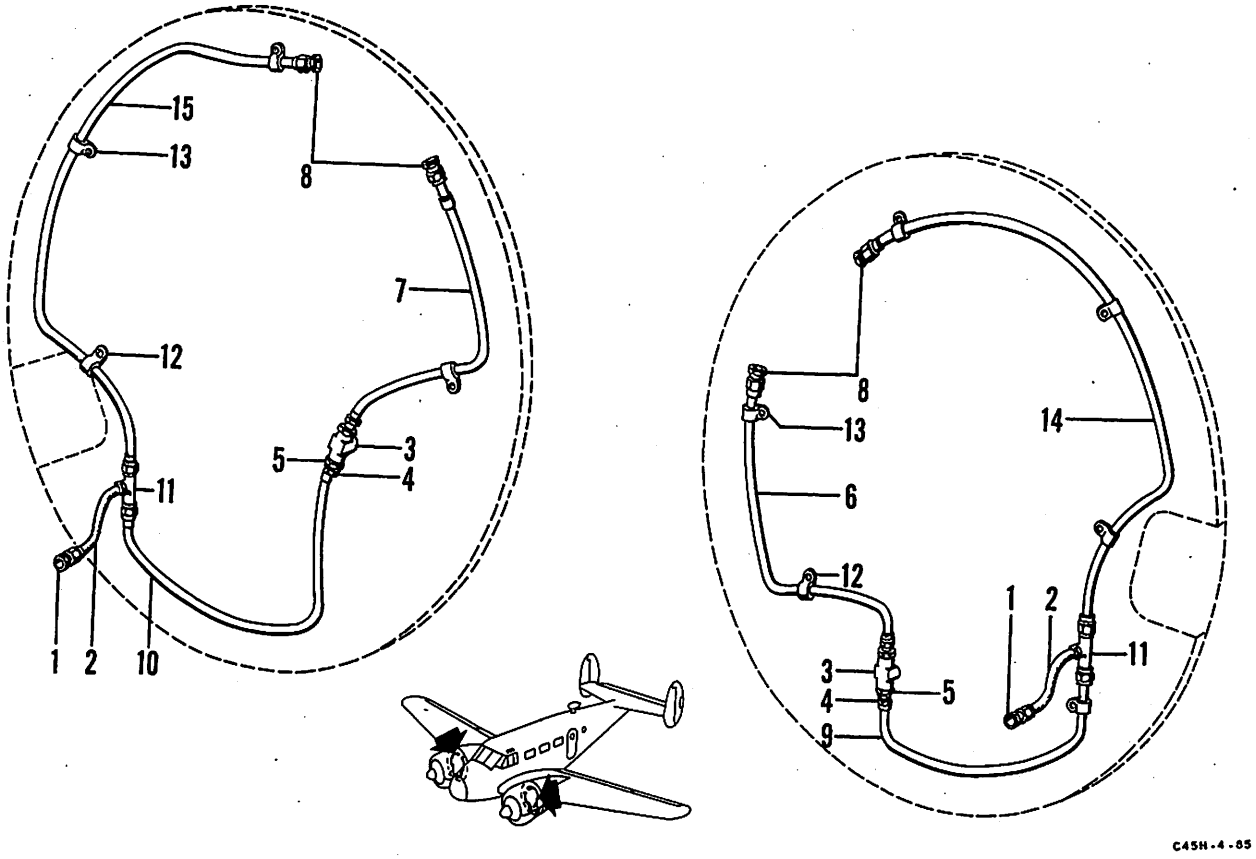

Figure 85. Engine Section CB Fire Extinguisher Installation

FIG. & INDEX NO.	PART NO.	DESCRIPTION 1 2 3 4 5 6 7	UNITS PER ASSY	USABLE ON CODE
85	694-183195-1	EXTINGUISHER INSTL,ENGINE SECTION CB FIRE LH. /SEE FIG. 1 FOR NHA/	1	A-2
	694-183195-2	EXTINGUISHER INSTL,ENGINE SECTION CB FIRE RH. /SEE FIG. 1 FOR NHA/	1	A-2
- 1	AN816-6	. NIPPLE.	1	A-2
- 2	MS28741-6-26	. HOSE ASSY,ENGINE SECTION FIRE EXTINGUISHER.	1	A-2
- 3	AN938-10	. TEE	1	A-2
	AN924-10D	. NUT	1	A-2
- 4	AN919-14	. ADAPTER	2	A-2
- 5	AN902B10	. GASKET.	3	A-2
- 6	694-183175-17	. TUBE ASSY,FIRE EXTINGUISHER DISCHARGE LH.	1	A-2
- 7	694-183175-5	. TUBE ASSY,FIRE EXTINGUISHER DISCHARGE RH.	1	A-2
- 8	AN806-6	. PLUG.	2	A-2
- 9	694-183175-21	. TUBE ASSY,FIRE EXTINGUISHER LH.	1	A-2
- 10	694-183175-9	. TUBE ASSY,FIRE EXTINGUISHER RH.	1	A-2
- 11	AN824-6	. TEE	1	A-2
- 12	AN742-6	. CLAMP /ATTACHING PARTS/	6	A-2
- 13	AN520-10-8	. SCREW	1	
	AN960-10	. WASHER.	1	
	AN365-1032	. NUT ----*----	1	
- 14	694-183175-13	. TUBE ASSY,FIRE EXTINGUISHER LH.	1	A-2
- 15	694-183175-1	. TUBE ASSY,FIRE EXTINGUISHER RH.	1	A-2

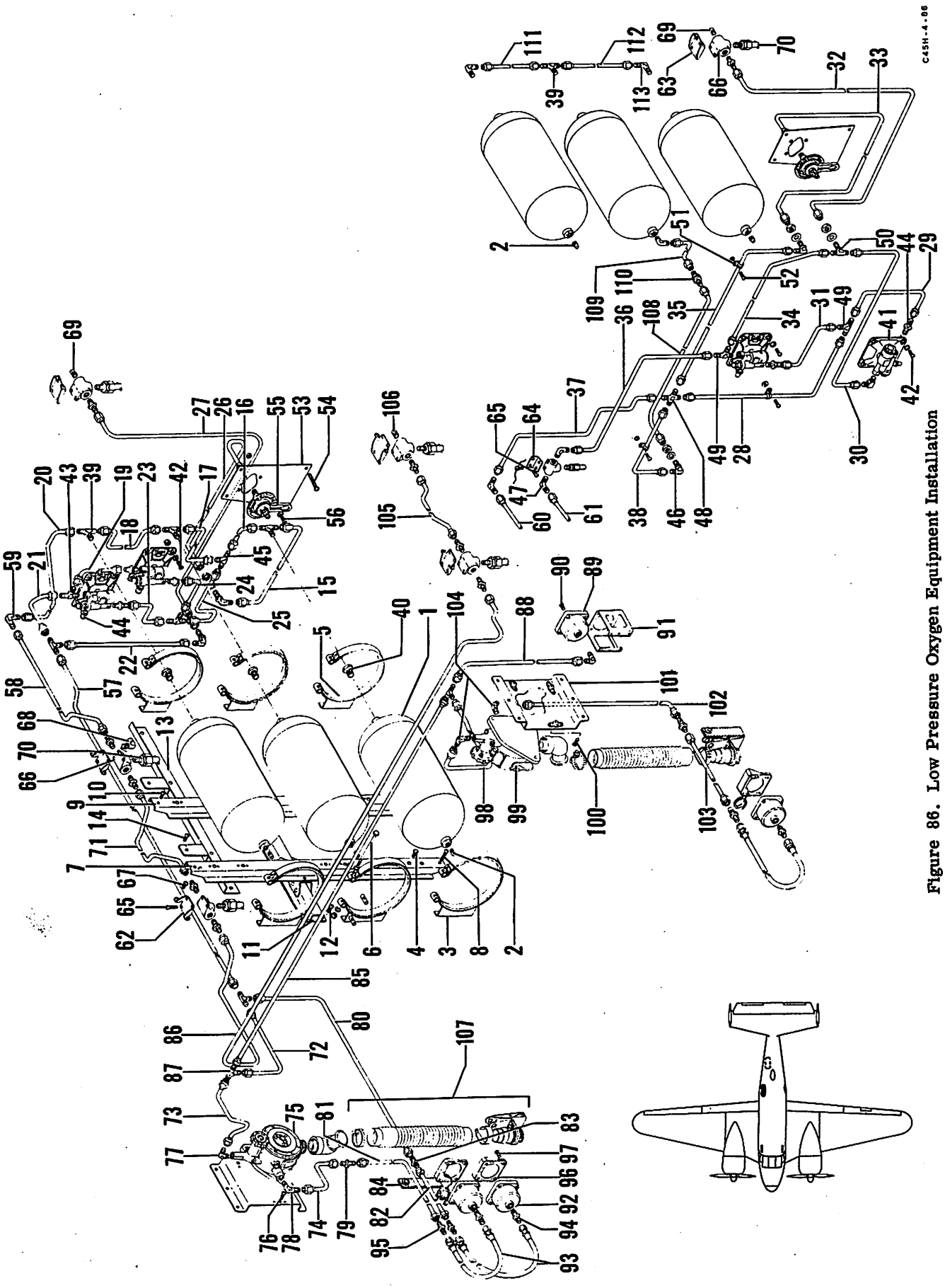

Figure 86. Low Pressure Oxygen Equipment Installation

FIG. & INDEX NO.	PART NO.	DESCRIPTION 1 2 3 4 5 6 7	UNITS PER ASSY	USABLE ON CODE
86	694-180480	EQUIPMENT INSTL,LOW PRESSURE OXYGEN . . . . . /SEE FIG. 1 FOR NHA/	1	A-1
	694-180470	EQUIPMENT INSTL,LOW PRESSURE OXYGEN . . . . . /SEE FIG. 1 FOR NHA/	1	B
- 1	NO NUMBER	. CYLINDER,OXYGEN /TYPE G-1/.	3	A-1,B
- 2	AN913-2	. PLUG,OXYGEN CYLINDER.	3	A-1
	AN913-2	. PLUG,OXYGEN CYLINDER.	2	B
- 3	694-180503	. SUPPORT ASSY,LARGE OXYGEN CYLINDER. . . . . /ATTACHING PARTS/	6	A-1
- 4	AN3-4A	. BOLT.	3	
		----*----		
- 5	694-180502	. . BAND,OXYGEN CYLINDER SUPPORT ASSY . . . . . /ATTACHING PARTS/	1	A-1,B
- 6	105982-3A-45-104	. . BOLT.	1	
	814-180507	. . BUSHING,OXYGEN CYLINDER SUPPORT ASSY. . . .	2	
	AN960-10L	. . WASHER.	2	
	AN365-1032	. . NUT	1	
	694-180503-2	. . PAD	1	
		----*----		
- 7	694-180511	. SUPPORT ASSY,OXYGEN CYLINDER FWD. . . . . /ATTACHING PARTS/	1	A-1
- 8	AN520-10-20	. SCREW	1	
	AN520-10-12	. SCREW	2	
	AN520-10-18	. SCREW	1	
	AN365-1032	. NUT	1	
		----*----		
- 9	694-180512	. SUPPORT ASSY,OXYGEN CYLINDER AFT. . . . . /ATTACHING PARTS/	1	A-1
- 10	AN520-10-12	. SCREW	2	
	AN520-10-18	. SCREW	1	
	AN520-10-20	. SCREW	1	
	AN365-1032	. NUT	1	
		----*----		
- 11	694-180510	. SUPPORT ASSY,OXYGEN CYLINDER CENTER . . . . . /ATTACHING PARTS/	1	A-1
- 12	AN520-10-12	. SCREW	4	
		----*----		
- 13	694-180513	. ANGLE ASSY,OXYGEN CYLINDER TAP. . . . . /ATTACHING PARTS/	1	A-1
- 14	AN520-10-12	. SCREW	2	
		----*----		
- 15	694-180481-12	. TUBE ASSY,LOW PRESSURE OXYGEN SYSTEM.	1	A-1
- 16	694-180481-16	. TUBE ASSY,LOW PRESSURE OXYGEN SYSTEM.	1	A-1,B
- 17	694-180481-20	. TUBE ASSY,LOW PRESSURE OXYGEN SYSTEM.	1	A-1
- 18	694-180481-24	. TUBE ASSY,LOW PRESSURE OXYGEN SYSTEM.	1	A-1
- 19	694-180481-44	. TUBE ASSY,LOW PRESSURE OXYGEN SYSTEM.	1	A-1
- 20	694-180481-28	. TUBE ASSY,LOW PRESSURE OXYGEN SYSTEM.	1	A-1
- 21	694-180481-48	. TUBE ASSY,LOW PRESSURE OXYGEN SYSTEM.	1	A-1
- 22	694-180481-52	. TUBE ASSY,LOW PRESSURE OXYGEN SYSTEM.	1	A-1
- 23	694-180481-40	. TUBE ASSY,LOW PRESSURE OXYGEN SYSTEM.	1	A-1
- 24	694-180481-36	. TUBE ASSY,LOW PRESSURE OXYGEN SYSTEM.	1	A-1
- 25	694-180481-32	. TUBE ASSY,LOW PRESSURE OXYGEN SYSTEM.	1	A-1
- 26	694-180481-8	. TUBE ASSY,LOW PRESSURE OXYGEN SYSTEM.	1	A-1
- 27	694-180481-4	. TUBE ASSY,LOW PRESSURE OXYGEN SYSTEM.	1	A-1
- 28	694-180471-49	. TUBE ASSY,OXYGEN SYSTEM	1	B-1
- 29	694-180471-53	. TUBE ASSY,OXYGEN SYSTEM	1	B
- 30	694-180471-57	. TUBE ASSY,OXYGEN SYSTEM	1	B
- 31	694-180471-65	. TUBE ASSY,OXYGEN SYSTEM	1	B
- 32	694-180471-61	. TUBE ASSY,OXYGEN SYSTEM	1	B
- 33	694-180471-29	. TUBE ASSY,OXYGEN SYSTEM	1	B
- 34	694-180471-25	. TUBE ASSY,OXYGEN SYSTEM	1	B
- 35	694-180471-33	. TUBE ASSY,OXYGEN SYSTEM	1	B
- 36	694-180471-37	. TUBE ASSY,OXYGEN SYSTEM	1	B
- 37	694-180471-41	. TUBE ASSY,OXYGEN SYSTEM	1	B
- 38	694-180471-45	. TUBE ASSY,OXYGEN SYSTEM	1	B
- 39	AN825-5D	. TEE	3	A-1
	AN825-5D	. TEE	1	B

FIG. & INDEX NO.	PART NO.	DESCRIPTION 1 2 3 4 5 6 7	UNITS PER ASSY	USABLE ON CODE
86 - 40	AN912-1	• REDUCER	3	A-1
	AN912-1	• REDUCER	1	B
- 41	AN6010-1	• REGULATOR	2	A-1,B
		/ATTACHING PARTS/		
- 42	AN520-10R6	• SCREW	4	A-1
	AN515-10R6	• SCREW	4	B
	AN960-10L	• WASHER	4	
	AN365-1032	• NUT	4	
		----*----		
- 43	AN826-5D	• TEE	1	A-1
- 44	AN816-5D	• NIPPLE	3	A-1
	AN816-5D	• NIPPLE	2	B
- 45	AN824-5D	• TEE	2	A-1
- 46	AN833-5D	• ELBOW,90 DEGREE	2	A-1,B
	AN924-5D	• NUT	2	A-1,B
	AN960D816	• WASHER	2	A-1,B
- 47	AN821-5D	• ELBOW,90 DEGREE	3	A-1,B
- 48	AN827-5D	• CROSS	1	B
- 49	AN825-5D	• TEE	2	B
- 50	AN834-5D	• TEE	1	B
	AN924-5D	• NUT	2	B
	AN960D816	• WASHER	2	B
- 51	AN742-7C	• CLAMP	2	B
		/ATTACHING PARTS/		
- 52	AN515-10R10	• SCREW	1	
	AN960-10L	• WASHER	1	
		----*----		
- 53	694-180086	• PLACARD,OXYGEN SUPPLY	1	A-1,B
		/ATTACHING PARTS/		
- 54	AN526-1032R8	• SCREW	4	
		----*----		
- 55	AN6024-6	• VALVE,FILLER	1	A-1,B
		/ATTACHING PARTS/		
- 56	AN507-1032R10	• SCREW	4	
	AN960-10	• WASHER	4	
	AN365-1032	• NUT	4	
		----*----		
- 57	694-180481-68	• TUBE ASSY,LOW PRESSURE OXYGEN SYSTEM	1	A-1
- 58	694-180482-4	• TUBE ASSY,OXYGEN SYSTEM	1	A-1
	100696-D12-07-006	• SPACER	2	A-1
- 59	AN821-5D	• ELBOW,90 DEGREE	1	A-1
- 60	694-180471-5	• TUBE ASSY,OXYGEN SYSTEM	1	B
- 61	694-180471-17	• TUBE ASSY,OXYGEN SYSTEM	1	B
	100696-D12-07-012	• SPACER	1	B
- 62	694-180475	• BRACKET,OXYGEN OUTLET FILLER MOUNT	4	A-1
	694-180475	• BRACKET,OXYGEN OUTLET FILLER MOUNT	2	B
- 63	694-180476	• BRACKET,OXYGEN OUTLET FILLER MOUNT	1	A-1,B
- 64	694-180480-1	• BRACKET,OXYGEN OUTLET FILLER MOUNT	1	B
		/ATTACHING PARTS/		
- 65	AN520-10R17	• SCREW	16	A-1
	AN515-10R17	• SCREW	8	B
	AN365-1032	• NUT	16	A-1
	AN365-1032	• NUT	8	B
		----*----		
- 66	694-180450	• MOUNTING,OXYGEN OUTLET VALVE	5	A-1
	694-180450	• MOUNTING,OXYGEN OUTLET VALVE	4	B
		/ATTACHING PARTS/		
- 67	AN503-8-4	• SCREW	4	A-1
	AN503-8-4	• SCREW	2	B
		----*----		
- 68	AN914-1D	• ELBOW,90 DEGREE	1	B
- 69	AN913-1D	• PLUG	1	A-1,B
- 70	AN6009-2A	• COUPLING	5	A-1
	AN6009-2A	• COUPLING	4	B

FIG. & INDEX NO.	PART NO.	DESCRIPTION 1 2 3 4 5 6 7	UNITS PER ASSY	USABLE ON CODE
86 - 71	694-180482-8	. TUBE ASSY,OXYGEN SYSTEM	1	A-1,B
- 72	694-180482-16	. TUBE ASSY,OXYGEN SYSTEM	1	A-1,B
- 73	694-180482-28	. TUBE ASSY,OXYGEN SYSTEM	1	A-1,B
- 74	694-180482-32	. TUBE ASSY,OXYGEN SYSTEM	1	A-1,B
- 75	NO NUMBER*	. REGULATOR,/TYPE A12A/	1	A-1,B
		/USAF SPECIFICATION 40370/		
	AN6004-4*	. REGULATOR	1	A-1,B
		/ATTACHING PARTS/		
- 76	AN515-10R8	. SCREW	3	
		----*----		
- 77	AN823-5D	. ELBOW,45 DEGREE	1	A-1
- 78	AN822-5D	. ELBOW,90 DEGREE	2	A-1,B
- 79	AN815-5D	. UNION	2	A-1,B
- 80	694-180482-20	. TUBE ASSY,OXYGEN SYSTEM	1	A-1,B
- 81	694-180482-36	. TUBE ASSY,OXYGEN SYSTEM	1	A-1,B
- 82	694-180482-40	. TUBE ASSY,OXYGEN SYSTEM	1	A-1,B
- 83	AN832-5D	. UNION	1	A-1,B
- 84	NASP-SK2482	. TAB ASSY.	2	A-1,B
- 85	694-180481-64	. TUBE ASSY,LOW PRESSURE OXYGEN SYSTEM. . . .	1	A-1,B
- 86	694-180481-60	. TUBE ASSY,LOW PRESSURE OXYGEN SYSTEM. . . .	1	A-1
- 87	AN834-5D	. TEE	2	A-1,B
	AN924-5D	. NUT	2	A-1,B
	AN960D816	. WASHER.	2	A-1,B
- 88	694-180481-56	. TUBE ASSY,LOW PRESSURE OXYGEN SYSTEM. . . .	1	A-1,B
- 89	AN6021-1A	. GAGE,PRESSURE OXYGEN.	2	A-1,B
		/ATTACHING PARTS/		
- 90	AN515-6-6	. SCREW	4	
		----*----		
- 91	694-180474	. BRACKET,OXYGEN PRESSURE GAGE.	1	A-1,B
- 92	AN6029-1	. INDICATOR	2	A-1,B
- 93	AN6039-5-14	. HOSE ASSY	3	A-1,B
	AN6039-5-14	. HOSE ASSY	2	A-1,B
- 94	AN815-5D	. NIPPLE.	3	A-1,B
	AN815-5D	. NIPPLE.	2	B
- 95	AN816-5D	. NIPPLE.	3	A-1
	AN816-5D	. NIPPLE.	2	B
- 96	B-4751	. SHIELD,/72914/.	2	A-1,B
		/ATTACHING PARTS/		
- 97	AN515-6-10	. SCREW	4	
	AN507-632-10	. SCREW	4	
		----*----		
- 98	694-180482-12	. TUBE ASSY,OXYGEN SYSTEM	1	A-1,B
- 99	NO NUMBER*	. REGULATOR,/TYPE A12A/	1	A-1,B
		/USAF SPECIFICATION 40370/		
	AN6004-4*	. REGULATOR	1	A-1,B
		/ATTACHING PARTS/		
-100	AN515-10R8	. SCREW	3	
		----*----		
-101	694-180478	. BRACKET ASSY,OXYGEN REGULATOR LH.	1	A-1,B
-102	694-180482-44	. TUBE ASSY,OXYGEN SYSTEM	1	A-1,B
-103	694-180482-48	. TUBE ASSY,OXYGEN SYSTEM	1	A-1,B
-104	AN823-5D	. ELBOW,45 DEGREE	2	A-1,B
-105	694-180482-52	. TUBE ASSY	1	A-1
-106	AN913-1D	. PLUG.	2	A-1,B
-107	AN6003-48A	. HOSE ASSY	2	A-1,B
-108	694-180571-13	. TUBE ASSY,OXYGEN SYSTEM	1	B
-109	694-180471-21	. TUBE ASSY,OXYGEN SYSTEM	1	B
-110	AN832-5D	. UNION	1	B
	AN960D816	. WASHER.	1	B
	AN924-5D	. NUT	1	B
-111	694-180471-1	. TUBE ASSY,OXYGEN SYSTEM	1	B
-112	694-180471-9	. TUBE ASSY,OXYGEN SYSTEM	1	B
-113	AN822-5D	. ELBOW,90 DEGREE	3	B

*THESE PARTS ARE INTERCHANGEABLE.

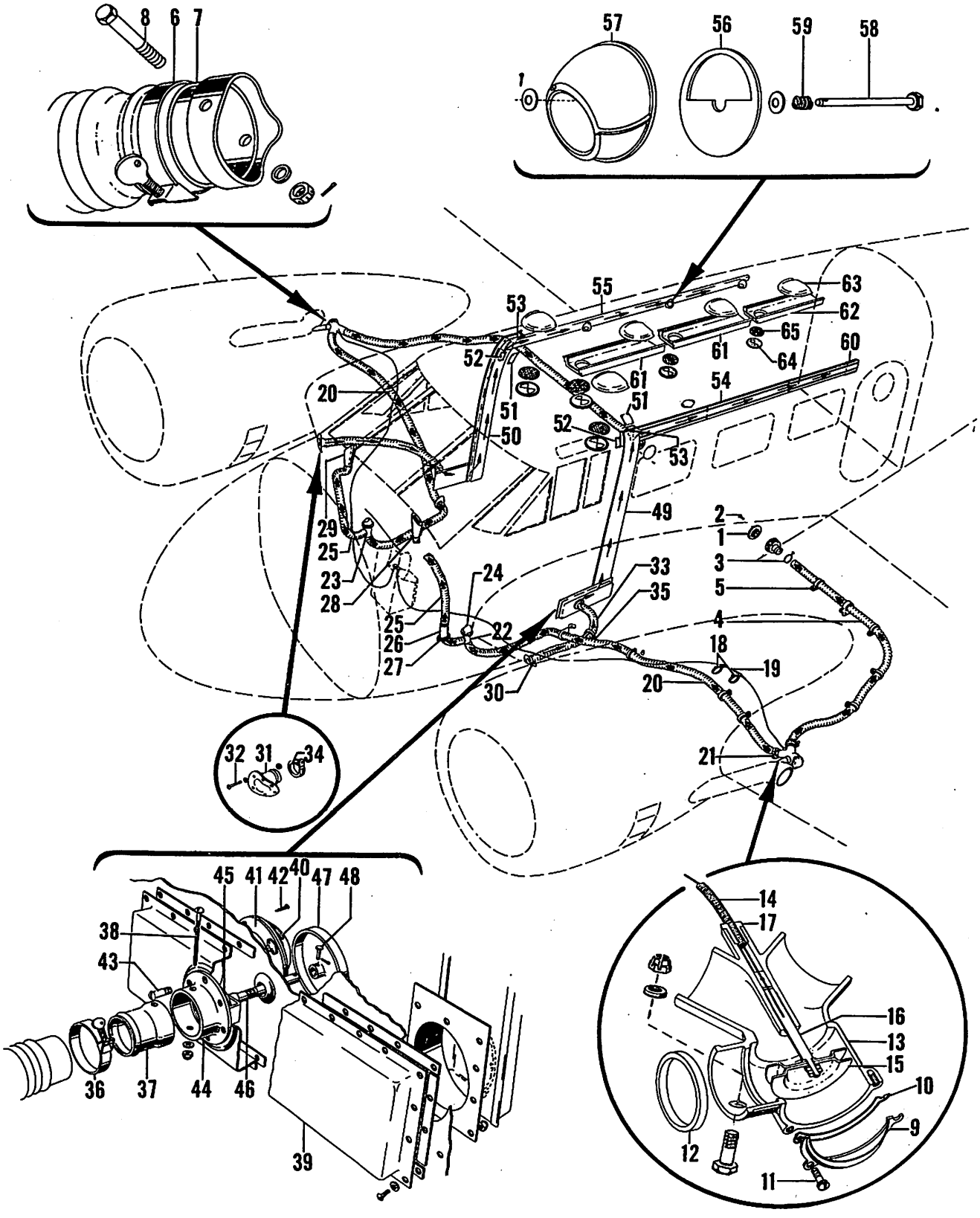

Figure 87. Heat & Ventilation System Installation

C45H-4-87

FIG. & INDEX NO.	PART NO.	DESCRIPTION 1 2 3 4 5 6 7	UNITS PER ASSY	USABLE ON CODE
87	694-183956	SYSTEM INSTL,HEATING & VENTILATING. . . . . /SEE FIG. 1 FOR NHA/	1	A-1
	694-183950	SYSTEM INSTL,HEATING & VENTILATING. . . . . /SEE FIG. 1 FOR NHA/	1	B
	694-183956-4	SYSTEM INSTL,HEATING & VENTILATING. . . . . /SEE FIG. 1 FOR NHA/	1	A-2
- 1	183996P	. DIFFUSER,CABIN HEATING. . . . . /ATTACHING PARTS/	2	
- 2	AN526-832-10	. SCREW	6	
		----*----		
- 3	105798-12	. CLAMP	2	
- 4	109644-116-5A	. HOSE,CABIN HEATING.	2	
- 5	AN742D36	. CLIP. . . . . /ATTACHING PARTS/	18	
	AN520-10-8	. SCREW	1	
	AN515-8-8	. SCREW	1	
	AN960-8	. WASHER.	1	
	AN960-10	. WASHER.	1	
	AN365-832	. NUT	1	
	AN365-1032	. NUT	1	
		----*----		
- 6	105798-12	. CLAMP	4	
- 7	814-183955	. ADAPTER,CABIN HEATING VALVE /DRILL ON INSTL/. /ATTACHING PARTS/	4	
- 8	AN3-27	. BOLT.	1	
	AN960-10	. WASHER.	1	
	AN310-3	. NUT	1	
	AN380-2-2	. PIN,COTTER.	1	
		----*----		
- 9	189258	. CAP,CABIN HEATING VALVE	2	
- 10	189256	. PLATE,CABIN HEATING VALVE COVER . . . . . /ATTACHING PARTS/	2	
- 11	AN502-10-8	. SCREW	3	
		----*----		
- 12	189218	. DEFLECTOR,INTENSIFIER TUBE GAS.	2	
- 13	189250	. VALVE ASSY,CABIN HEATING. . . . . /ATTACHING PARTS/	2	
	AN3-27	. BOLT.	1	
	AN960-10	. WASHER.	1	
	AN310-3	. NUT	1	
	AN380-2-2	. PIN,COTTER.	1	
		----*----		
- 14	404-183958-2	. CONTROL ASSY,VALVE.	2	
- 15	189255	. DIAPHRAGM,HEATING VALVE	4	
- 16	189253	. ROD,CABIN HEATER VALVE PUSH	2	
- 17	111730	. BUSHING,FLEXIBLE CONDUIT.	2	
- 18	183998	. CLAMP,HEATER VALVE CONTROL. . . . . /ATTACHING PARTS/	2	
	AN515-8-8	. SCREW	1	
	AN960-8	. WASHER.	1	
	AN365-832	. NUT	1	
		----*----		
- 19	106043-S-8-04-200	. TUBING,VALVE CONTROL.	2	
- 20	109664-118-5A	. HOSE,COCKPIT HEATING.	2	
- 21	105798-12	. CLAMP	2	
- 22	814-183954	. FLANGE ASSY,PILOTS HEATER VALVE LH.	1	
- 23	814-183954-1	. FLANGE ASSY,PILOTS HEATER VALVE RH.	1	
- 24	183985	. OUTLET ASSY,COLD AIR. . . . . /ATTACHING PARTS/	2	
	AN526-832-16	. SCREW	4	
	AN960-8	. WASHER.	4	
		----*----		
	183986	. . PLATE,COLD AIR OUTLET	1	
	183921	. . CAP ASSY,COLD AIR	1	

FIG. & INDEX NO.	PART NO.	DESCRIPTION 1 2 3 4 5 6 7	UNITS PER ASSY	USABLE ON CODE
87	183976	. . GASKET,COLD AIR	1	
		/ATTACHING PARTS/		
	AN393-29	. . PIN	1	
	AN960-10L	. . WASHER.	3	
	111504-029-013-0024-8	. . SPRING.	1	
		----*----		
- 25	109644-043-4A	. HOSE,DEFROSTER.	2	
- 26	814-183960	. BOOT,DEFROSTER HOSE	2	
- 27	814-183959	. RING,DEFROSTER HOSE	2	
		/ATTACHING PARTS/		
	AN515-8-18	. SCREW	4	
	AN960-8	. WASHER.	4	
	AN365-832	. NUT	4	
		----*----		
- 28	894-183981	. DEFROSTER ASSY,LH	1	
- 29	894-183981-1	. DEFROSTER ASSY,RH	1	
- 30	814-183957	. FLANGE ASSY,COLD AIR LH	1	
- 31	814-183957-1	. FLANGE ASSY,COLD AIR RH	1	
		/ATTACHING PARTS/		
- 32	AN526-632-6	. SCREW	6	
	AN960-6	. WASHER.	6	
	AN365-6	. NUT	6	
		----*----		
- 33	109645-034-5A	. HOSE,FRESH AIR.	2	
- 34	105798-12	. CLAMP	4	
- 35	AN742D36	. CLIP.	2	
	AN742D24	. CLIP.	2	
		/ATTACHING PARTS/		
	AN520-10-10	. SCREW	4	
	814-183966	. SPACER,HEATING & VENTILATING HOSE	2	
	AN960-10	. WASHER.	4	
	AN365-1032	. NUT	4	
		----*----		
- 36	105798-12	. CLAMP	2	
- 37	814-183958	. ADAPTER,COLD AIR BOX.	2	
		/ATTACHING PARTS/		
- 38	AN515-8-48	. SCREW	1	
	AN960-8	. WASHER.	1	
	AN365-832	. NUT	1	
		----*----		
- 39	183979	. BOX ASSY,COLD AIR VALVE	2	
- 40	183985	. OUTLET ASSY,COLD AIR.	4	
- 41	183947	. SPACER,COLD AIR OUTLET.	2	
		/ATTACHING PARTS/		
- 42	AN526-832	. SCREW	4	
	AN960-8	. WASHER.	4	
		----*----		
	183967	. VALVE ASSY,COLD AIR INTAKE.	1	
		/ATTACHING PARTS/		
- 43	AN515-8-10	. SCREW	6	
		----*----		
- 44	305911	. . BODY,COLD AIR INTAKE.	1	
- 45	106333	. . DIAPHRAGM,COLD AIR VALVE.	1	
- 46	183970	. . SHAFT,COLD AIR VALVE.	1	
- 47	205218-2	. . WHEEL,COLD AIR VALVE SHAFT.	1	
		/ATTACHING PARTS/		
- 48	AN392-27	. . PIN	1	
	AN380-2-2	. . PIN,COTTER.	1	
	AN364-428	. . NUT	1	
		----*----		
- 49	183955L	. DUCT ASSY,COLD AIR VERTICAL LH.	1	
- 50	183955R	. DUCT ASSY,COLD AIR VERTICAL RH.	1	
- 51	183982	. COVER ASSY,CABIN COLD AIR DUCT.	2	
		/ATTACHING PARTS/		
	AN505-6-6	. SCREW	4	
		----*----		

FIG. & INDEX NO.	PART NO.	DESCRIPTION 1 2 3 4 5 6 7	UNITS PER ASSY	USABLE ON CODE
87 - 52	183966	. CAP ASSY,CABIN COLD AIR DUCT. . . . . /ATTACHING PARTS/	2	
	AN515-8-8	. SCREW	8	
		----*----		
- 53	183953	. PLATE,CABIN COLD AIR DUCT . . . . . /ATTACHING PARTS/	2	
	AN515-6-8	. SCREW	4	
	AN960-6	. WASHER.	4	
	AN365-632	. NUT	4	
		----*----		
- 54	183980	. DUCT ASSY,CABIN COLD AIR LH	1	
- 55	894-183957	. DUCT ASSY,CABIN COLD AIR RH	1	A
	814-180564	. PLATE,CABIN COLD AIR.	1	B
	84-183982	. DUCT ASSY,CABIN COLD AIR RH	1	B
	183977	. . DUCT ASSY,COLD AIR OUTLET	6	
- 56	183976	. . . GASKET,COLD AIR OUTLET.	1	
- 57	183921	. . . CAP ASSY,COLD AIR DUCT OUTLET . . . . . /ATTACHING PARTS/	1	
- 58	AN393-77	. . . PIN,COLD AIR OUTLET	1	
- 59	111504-029-013-0024-8	. . . SPRING.	1	
	AN960-10	. . . WASHER.	3	
	AN380-2-2	. . . PIN,COTTER.	1	
		----*----		
- 60	404-183981	. END ASSY,COLD AIR DUCT. . . . . /ATTACHING PARTS/	2	
	AN526-832	. SCREW	6	
		----*----		
- 61	894-183959	. DUCT ASSY,CABIN EXHAUST	2	A-1,A-2
- 61	894-183959	. DUCT ASSY,CABIN EXHAUST	1	B
- 62	74-183942	. DUCT ASSY,CABIN EXHAUST	1	
- 63	74-183943	. VENT,CABIN EXHAUST.	5	
- 64	18393	. VENTILATOR ASSY,CABIN	5	A-1,A-2
	18393	. VENTILATOR ASSY,CABIN	4	B
- 65	183946	. SCREEN,VENTILATOR ASSY CABIN.	5	A-1,A-2
	183946	. SCREEN,VENTILATOR ASSY CABIN.	4	B
	183945	. SCREEN,VENTILATOR ASSY CABIN.	2	A-1,A-2
	183945	. SCREEN,VENTILATOR ASSY CABIN.	4	B

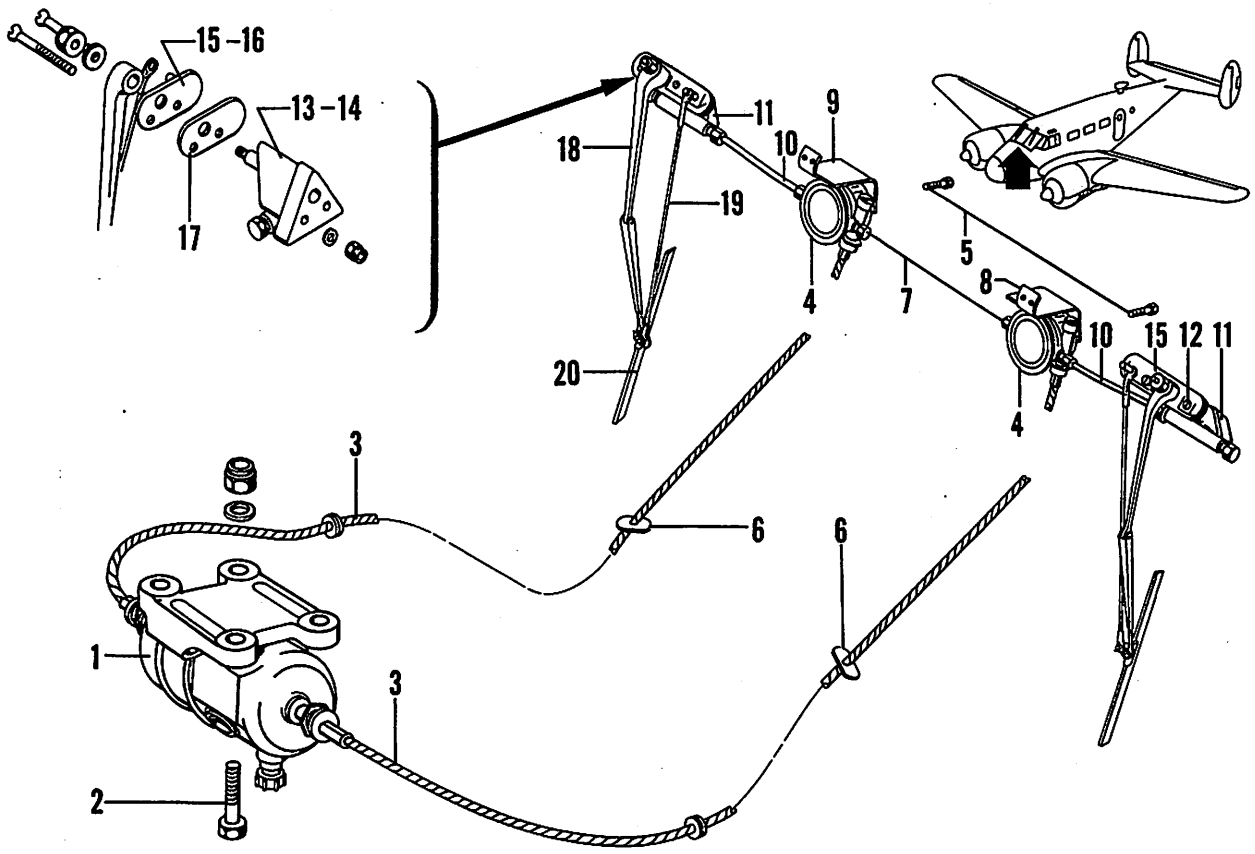

Figure 90. Windshield Wiper Installation

C45H-4-90

FIG. & INDEX NO.	PART NO.	DESCRIPTION 1 2 3 4 5 6 7	UNITS PER ASSY	USABLE ON CODE
90	694-180430	WIPER INSTL,WINDSHIELD /SEE FIG. 1 FOR NHA/	1	
- 1	D15834	. MOTOR ASSY,WINDSHIELD WIPER /GFAE/	1	
		/ATTACHING PARTS/		
- 2	AN73-6	. BOLT	4	
	AN960C10L	. WASHER	4	
	AN365-1032	. NUT	4	
		----*----		
- 3	B13804	. DRIVE ASSY,FLEXIBLE /GFAE/	2	
- 4	D14495	. CONVERTER ASSY,/GFAE/	2	
		/ATTACHING PARTS/		
- 5	AN73-2	. BOLT	2	
		----*----		
- 6	694-180430-8	. GROMMET	2	
- 7	A11099	. CAP,/GFAE/	2	
- 8	B17232	. BRACKET,LH /GFAE/	1	
- 9	B17233	. BRACKET,RH /GFAE/	1	
- 10	A60024	. CONTROL ASSY,/GFAE/	2	
- 11	B169491	. UNIT ASSY,WINDOW /GFAE/	2	
		/ATTACHING PARTS/		
- 12	AN509-10-46	. SCREW	2	
	AN960C10L	. WASHER	2	
	AN365-1032	. NUT	2	
		----*----		
- 13	B16398	. SPACER,LH /GFAE/	1	
- 14	B16640	. SPACER,RH /GFAE/	1	

FIG. & INDEX NO.	PART NO.	DESCRIPTION 1 2 3 4 5 6 7	UNITS PER ASSY	USABLE ON CODE
90 - 15	A16396	. PLATE ASSY,LH /GFAE/.	1	
- 16	A16402	. PLATE ASSY,RH /GFAE/.	1	
- 17	A16397	. GASKET,/GFAE/	2	
- 18	D15602	. ARM ASSY,DRIVE /GFAE/	1	
		/ATTACHING PARTS/		
	AN960C10L	. WASHER.	2	
	AN365-1032	. NUT	2	
		----*----		
- 19	D16716-3	. ROD ASSY,TIE /GFAE/	2	
		/ATTACHING PARTS/		
	AN960C6	. WASHER.	1	
	AN380C2-2	. PIN,COTTER.	2	
		----*----		
- 20	B15839-27	. HOLDER ASSY,BLADE /GFAE/.	2	
		/ATTACHING PARTS/		
	AN960C6	. WASHER.	1	
	AN380C2-2	. PIN,COTTER.	2	
		----*----		

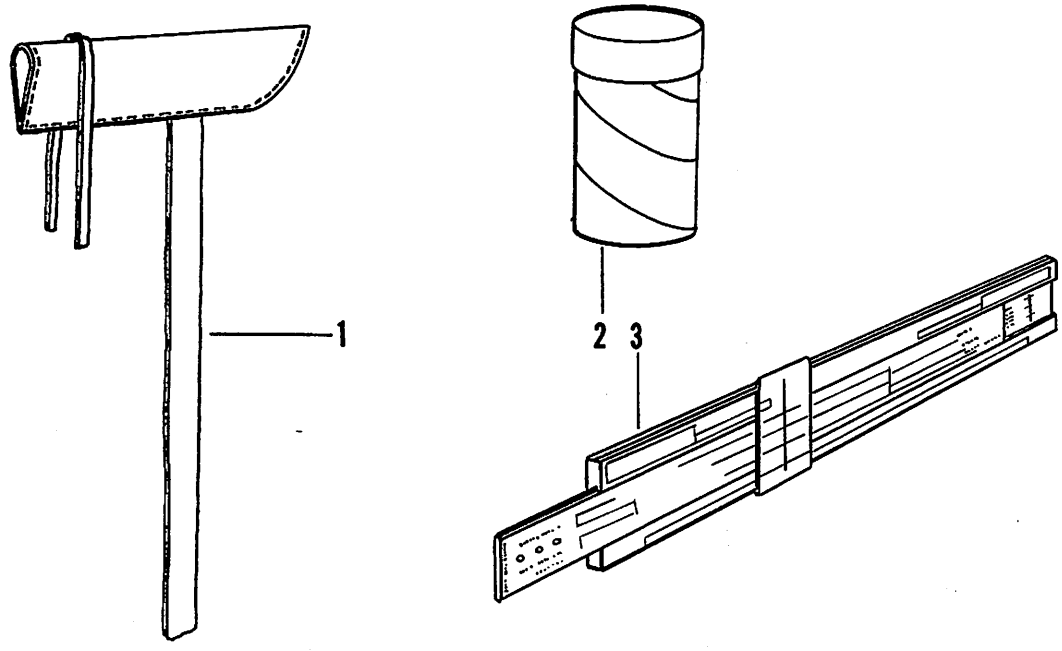

Figure 91. Miscellaneous Loose Equipment Installation

C45H-4-91

FIG. & INDEX NO.	PART NO.	DESCRIPTION 1 2 3 4 5 6 7	UNITS PER ASSY	USABLE ON CODE
91	694-180020	EQUIPMENT INSTL,MISCELLANEOUS LOOSE /SEE FIG. 1 FOR NHA/	1	
	36G4465	. CASE,AIRPLANE MOORING /GFAE/	1	
- 1	694-180440	. COVER,PITOT TUBE	2	
- 2	115043	. CONTAINERS	6	A
	115043	. CONTAINERS	5	B
	694-180600	. DIAGRAM,ELECTRICAL WIRING /BLUEPRINT/	1	A
	694-180800	. DIAGRAM,ELECTRICAL WIRING /BLUEPRINT/	1	B
	694-180669	. DIAGRAM,RADIO WIRING	1	A
	694-180700	. DIAGRAM,RADIO & INTERPHONE WIRING /BLUEPRINT/	1	B
	NO NUMBER	. FILE,G /GFAE/	1	
- 3	E1013	. ADJUSTER,LOAD	1	
	NO NUMBER	. KEY,NOSE DOOR	2	
	NO NUMBER	. KEY,CABIN DOOR	2	
	NO NUMBER	. RING,KEY	2	
	111187	. TAG,KEY	2	

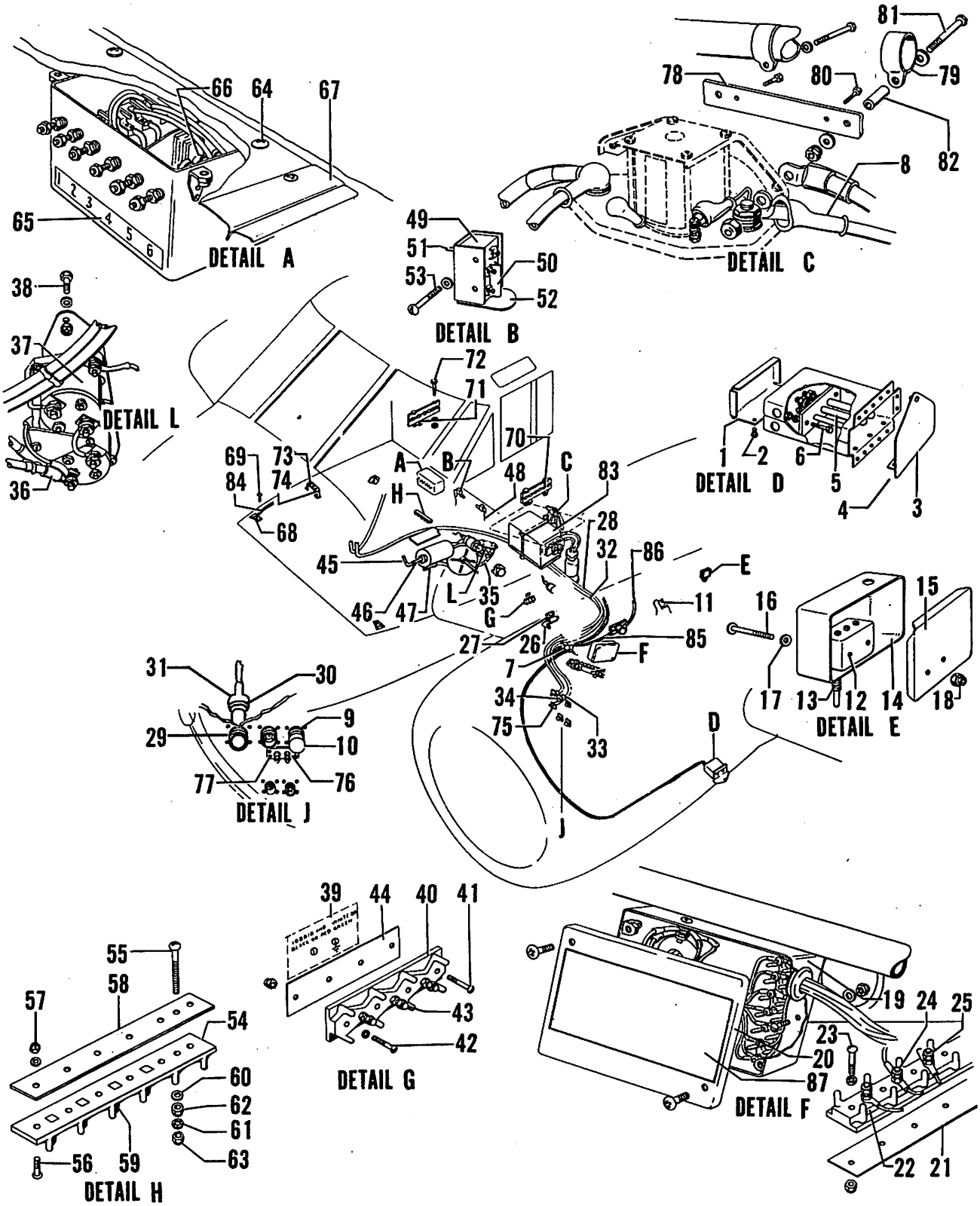

Figure 92. Center Section Electrical Equipment Installation

C45H-4-92

FIG. & INDEX NO.	PART NO.	DESCRIPTION 1 2 3 4 5 6 7	UNITS PER ASSY	USABLE ON CODE
92	694-180590	EQUIPMENT INSTL,CENTER SECTION ELECTRICAL . . . /SEE FIG. 1 FOR NHA/	1	A-1
	694-180860	EQUIPMENT INSTL,CENTER SECTION ELECTRICAL . . . /SEE FIG. 1 FOR NHA/	1	B
	694-180590-4	EQUIPMENT INSTL,CENTER SECTION ELECTRICAL . . . /SEE FIG. 1 FOR NHA/	1	A-2
	180960	. BOX INSTL,EXTERNAL POWER SOURCE	1	
- 1	180968	. . LID,EXTERNAL POWER SOURCE RECEPTACLE BOX. . /ATTACHING PARTS/	1	
- 2	AN515-6-6	. . SCREW	3	
		----*----		
	180966	. . DOOR ASSY,EXTERNAL POWER SOURCE RECEPTACLE.	1	
- 3	180967	. . . DOOR,EXTERNAL POWER SOURCE RECEPTACLE . . /ATTACHING PARTS/	1	
- 4	105774-C-063-00400	. . . PIN,HINGE	1	
		----*----		
	A4-30	. . . FASTENER,DZUS /72794/	1	
- 5	42B3748	. RECEPTACLE. . . . . /ATTACHING PARTS/	1	
- 6	AN3-7A	. BOLT.	2	
	AN960-10	. WASHER.	2	
	AN365-1032	. NUT	2	
		----*----		
	694-180764	. HARNESS ASSY,STARTER RELAY LH	1	
	694-180765	. HARNESS ASSY,STARTER RELAY RH	1	
- 7	AN3371-1	. . RELAY,STARTER	1	
- 8	AN781-4	. . COVER,TERMINAL.	2	
- 9	AN3100A-18-6S	. . RECEPTACLE.	1	
- 10	AN3057-10	. . ADAPTER	1	
	694-180758	. HARNESS ASSY,OIL DILUTION SOLENOID VALVE LH .	1	
	694-180759	. HARNESS ASSY,OIL DILUTION SOLENOID VALVE RH .	1	
- 11	37D6210	. . SOLENOID ASSY,/GFAE/.	2	
	694-180732	. HARNESS ASSY,NACELLE JUNCTION BOX LH.	1	
	694-180731	. HARNESS ASSY,NACELLE JUNCTION BOX RH.	1	
- 12	DT-2R-A7	. . SWITCH,LOWER LIMIT LH /40228/	2	
	AN3210-1	. . SWITCH,LOWER LIMIT RH	2	
- 13	MCD-7711	. . ACTUATOR,LH /40228/	1	
	AN3167-1	. . ACTUATOR,RH	1	
- 14	188023	. . BOX,LOWER LIMIT SWITCH LH	1	
	188023-1	. . BOX,LOWER LIMIT SWITCH RH	1	
- 15	118024	. . COVER ASSY,LANDING GEAR CONDUIT JUNCTION LH	1	
	118024-1	. . COVER ASSY,LANDING GEAR CONDUIT JUNCTION RH	1	
- 16	AN526-632-22	. . SCREW	2	
- 17	AN960-6	. . WASHER.	2	
- 18	AN365-632	. . NUT	2	
	404-180520	. . BOX ASSY,NACELLE JUNCTION LH.	1	
	404-180520-1	. . BOX ASSY,NACELLE JUNCTION RH.	1	
- 19	404-180522	. . . BOX,NACELLE JUNCTION LH	1	
	404-180522-1	. . . BOX,NACELLE JUNCTION RH	1	
- 20	404-180523	. . . LID,NACELLE JUNCTION BOX LH	1	
	404-180523-1	. . . LID,NACELLE JUNCTION BOX RH	1	
- 21	AN3437-1-8	. . . STRIP,TERMINAL.	2	
- 22	AN3435-2-7	. . . BLOCK,TERMINAL. . . . . /ATTACHING PARTS/	2	
- 23	AN515-4-6	. . . SCREW	4	
	AN960-4	. . . WASHER.	4	
	AN961-6	. . . WASHER.	28	
	AN936A6B	. . . WASHER.	28	
	AN365-440	. . . NUT	4	
		----*----		
- 24	AN3432-6-12	. . . STUD.	14	
- 25	AN341-6	. . . NUT	28	

FIG. & INDEX NO.	PART NO.	DESCRIPTION 1 2 3 4 5 6 7	UNITS PER ASSY	USABLE ON CODE
92 - 26	GE26F558G3	. CAPACITOR,/24446/	1	
	GE21F483	. CAPACITOR,/ALTERNATE FOR GE26F588G3/ /24446/	1	
		/ATTACHING PARTS/		
- 27	AN515-8-7	. SCREW	2	
	AN960-8	. WASHER	2	
	AN365-832	. NUT	2	
		----*----		
- 28	694-180933-1	. HARNESS ASSY,GENERATOR CONTROL LH	1	A
	694-180856-5	. HARNESS ASSY,GENERATOR CONTROL LH	1	B
	694-180934-1	. HARNESS ASSY,GENERATOR CONTROL RH	1	A
	694-180856-7	. HARNESS ASSY,GENERATOR CONTROL RH	1	B
- 29	AN3100A-28-5S	. . RECEPTACLE	1	
- 30	AN3057-16A	. . ADAPTER	1	
- 31	AN3420-14	. . BUSHING	1	
	AN3420-16	. . BUSHING	1	
- 32	694-180637	. HARNESS ASSY,IGNITION LH	1	
	694-180636	. HARNESS ASSY,IGNITION RH	1	
- 33	694-180591-6	. . CONDUIT ASSY,IGNITION LH	1	
	694-180591-8	. . CONDUIT ASSY,IGNITION RH	1	
- 34	AN3100A-18-22P	. . RECEPTACLE	1	
- 35	694-180736	. HARNESS ASSY,LANDING GEAR DYNAMIC BRAKE	1	
- 36	4300	. . COVER,TERMINAL /77969/	2	
- 37	6046H39A	. . CONTACTOR,/15605/	1	
		/ATTACHING PARTS/		
- 38	AN3-12A	. . BOLT	4	
	AN960-10	. . WASHER	4	
	AN960-3	. . WASHER	4	
	AN360-1032	. . NUT	4	
		----*----		
- 39	694-180027	. PLACARD,BOOSTER PUMP TERMINAL STRIP LH	1	
	694-180028	. PLACARD,BOOSTER PUMP TERMINAL STRIP RH	1	
- 40	AN3435-2-3	. BLOCK,TERMINAL	1	
		/ATTACHING PARTS/		
- 41	AN526-632-16	. SCREW	1	
- 42	AN515-4-10	. SCREW	1	
	AN961-6	. WASHER	2	
	AN936A6B	. WASHER	1	
	AN960-4	. WASHER	1	
	AN365-632	. NUT	1	
	AN341-6	. NUT	1	
	AN365-440	. NUT	1	
		----*----		
- 43	AN3432-6-12	. STUD	4	
	AN961-6	. WASHER	8	
	AN936A6B	. WASHER	4	
	AN341-6	. NUT	4	
	AN365-632	. NUT	4	
- 44	694-180590-2	. STRIP,INSULATING	1	A
	694-180860-2	. STRIP,INSULATING	1	B
- 45	694-180749	. HARNESS ASSY,GEAR MOTOR CIRCUIT BREAKER	1	
- 46	22500	. COVER,TERMINAL /77379/	2	
- 47	AN781-4	. COVER,TERMINAL	1	A
	4300	. COVER,TERMINAL	1	B
- 48	694-180724	. HARNESS ASSY,FLAP LIMIT SWITCH	1	
- 49	AN3210-1	. . SWITCH	2	
- 50	22500	. . COVER,TERMINAL /77379/	2	
- 51	MC-2711	. ACTUATOR,/40228/	2	
- 52	804-182526	. BOX,LIMIT SWITCH MECHANISM	2	
		/ATTACHING PARTS/		
- 53	AN526-632-20	. SCREW	4	
	AN960-6	. WASHER	4	
		----*----		

FIG. & INDEX NO.	PART NO.	DESCRIPTION 1 2 3 4 5 6 7	UNITS PER ASSY	USABLE ON CODE
92 - 54	AN3435-2-5	. BLOCK,TERMINAL.	1	
		/ATTACHING PARTS/		
- 55	AN526-632-16	. SCREW	1	
- 56	AN515-4-7	. SCREW	1	
	AN936A6B	. WASHER.	1	
	AN960-4	. WASHER.	1	
	AN961-6	. WASHER.	2	
	AN341-6	. NUT	1	
- 57	AN365-440	. NUT	1	
	AN365-632	. NUT	1	
		----*----		
- 58	AN3437-1-6	. STRIP	1	
- 59	AN3432-6-12	. STUD.	4	
- 60	AN961-6	. WASHER.	8	
- 61	AN936A6B	. WASHER.	8	
- 62	AN341-6	. NUT	4	
- 63	AN365-632	. NUT	4	
	814-180592	. BOX ASSY,FLAP DYNAMIC BRAKE CONTACTOR	1	
		/ATTACHING PARTS/		
- 64	AN526-832-18	. SCREW	2	
	AN970-3	. WASHER.	2	
		----*----		
- 65	814-180043	. . PLACARD	1	
- 66	NO NUMBER	. . CONTACTOR,/SPECIFICATION 20023/	1	
- 67	404-180593	. . BOX,FLAP DYNAMIC BRAKE CONTACTOR.	1	
- 68	824-180521	. PLATE,HARNESS ASSY PROTECTIVE	2	
		/ATTACHING PARTS/		
- 69	AN515-6-8	. SCREW	4	
		----*----		
- 70	404-189597	. BLOCK ASSY,INSTRUMENT PANEL PIPING.	2	
- 71	AN742D7	. CLAMP	2	
		/ATTACHING PARTS/		
- 72	AN3-11A	. BOLT.	2	
	AN960-10	. WASHER.	2	
	AN365-1032	. NUT	2	
		----*----		
- 73	694-180772	. BRACKET,SUPPORT FWD FUSELAGE HARNESS RH . . .	1	
		/ATTACHING PARTS/		
- 74	AN515-8-8	. SCREW	2	
	AN960-8	. WASHER.	2	
	AN365-832	. NUT	2	
		----*----		
- 75	AN781-4	. COVER,TERMINAL.	2	A
	4300	. COVER,TERMINAL /77969/.	2	B
- 76	8T113	. BLOCK,FIREWALL /35918/.	2	
		/ATTACHING PARTS/		
- 77	AN515-6-10	. SCREW	2	
	AN960-6	. WASHER.	4	
	AN365-632	. NUT	2	
		----*----		
- 78	784-189411	. PLATE,BATTERY MASTER RELAY MOUNTING	2	
- 79	AN741-12P	. CLAMP	4	A
	AN741-10P	. CLAMP	4	B
		/ATTACHING PARTS/		
- 80	AN4-6A	. BOLT.	1	
- 81	105982-4A-22-100	. BOLT.	1	
- 82	100696-X13-09-016	. SPACER.	1	
	AN960-416	. WASHER.	1	
	AN935-416	. WASHER.	2	
	AN515-4R	. NUT	2	
	AN365-428	. NUT	1	
		----*----		
- 83	694-189410-1	. BATTERY INSTL,LH /SEE FIG. 93/.	1	
	694-189410-2	. BATTERY INSTL,RH /SEE FIG. 93/.	1	

FIG. & INDEX NO.	PART NO.	DESCRIPTION 1 2 3 4 5 6 7	UNITS PER ASSY	USABLE ON CODE
92 - 84	694-180903	. HARNESS ASSY,FIRE EXTINGUISHER.	1	A-2
	694-180768	. HARNESS ASSY,ANTI-ICER PUMP	1	B
	694-180738	. HARNESS ASSY,BATTERY RELAY LH /SEE FIG. 93/ .	1	
	694-180739	. HARNESS ASSY,BATTERY RELAY RH /SEE FIG. 93/ .	1	
	694-180550	. EQUIPMENT INSTL,LEFT NACELLE ELECTRICAL . . .	1	A-1,B
	694-180550-1	. EQUIPMENT INSTL,LEFT NACELLE ELECTRICAL . . .	1	A-2
	694-180551	. EQUIPMENT INSTL,RIGHT NACELLE ELECTRICAL. . .	1	A-1,B
	694-180551-1	. EQUIPMENT INSTL,RIGHT NACELLE ELECTRICAL. . .	1	A-2
- 85	694-180924	. . HARNESS ASSY,PROPELLER RELAY LH	1	A-2
	694-180925	. . HARNESS ASSY,PROPELLER RELAY RH	1	A-2
- 83	694-180926	. . HARNESS ASSY,PROPELLER FEATHERING MOTOR LH.	1	A-2
	694-180927	. . HARNESS ASSY,PROPELLER FEATHERING MOTOR RH.	1	A-2
- 87	694-180063	. . PLACARD,JUNCTION BOX WARNING.	1	A-2

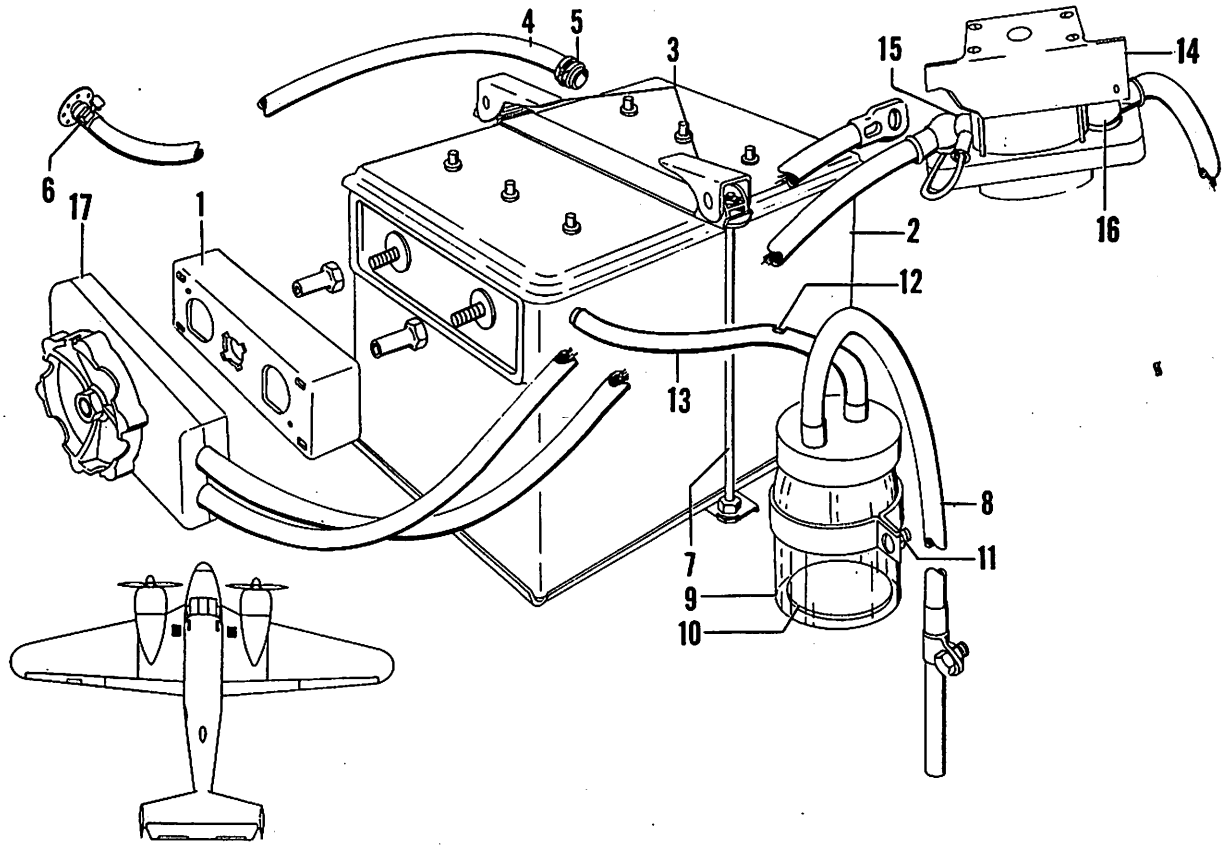

Figure 93. Battery Installation

C45H-4-93

FIG. & INDEX NO.	PART NO.	DESCRIPTION 1 2 3 4 5 6 7	UNITS PER ASSY	USABLE ON CODE
93	694-189410-1	BATTERY INSTL,LH /SEE FIG. 92 FOR NHA/	REF	
	694-189410-2	BATTERY INSTL,RH /SEE FIG. 92 FOR NHA/	REF	
- 1	11749	. RECEPTACLE,BATTERY KIT /71468/	1	
- 2	AN3151-2	. BATTERY,/GFAE/	1	
- 3	AN3156-2	. CLAMP	2	
- 4	106043S12-06-270	. TUBING	1	
- 5	A3122-12-59	. CLAMP,/78553/	1	
- 6	AN737-26	. CLAMP,HOSE	1	
- 7	84-181113	. BOLT	2	
	AN365-524	. NUT	2	
	AN315-5R	. NUT	2	
- 8	694-189410-3	. TUBING	1	
- 9	NO NUMBER	. JAR,PINT /70843/	1	
- 10	804-189409	. FELT	2	
- 11	AN515-8-12	. SCREW	1	
	AN960-8	. WASHER	1	
	AN365-832	. NUT	1	
- 12	694-189410-5	. TUBING	1	
- 13	694-189411	. SUPPORT,BATTERY TUBE LH	1	
	694-180739	HARNESS ASSY,BATTERY RELAY LH /SEE FIG. 92 FOR NHA/	REF	
	694-189738	HARNESS ASSY,BATTERY RELAY RH /SEE FIG. 92 FOR NHA/	REF	
- 14	AN3370-1	. RELAY,/GFAE/	1	
- 15	22500	. COVER,TERMINAL /77379/	1	
- 16	4300	. COVER,TERMINAL /77969/	2	
- 17	11751	. PLUG,/71468/	1	

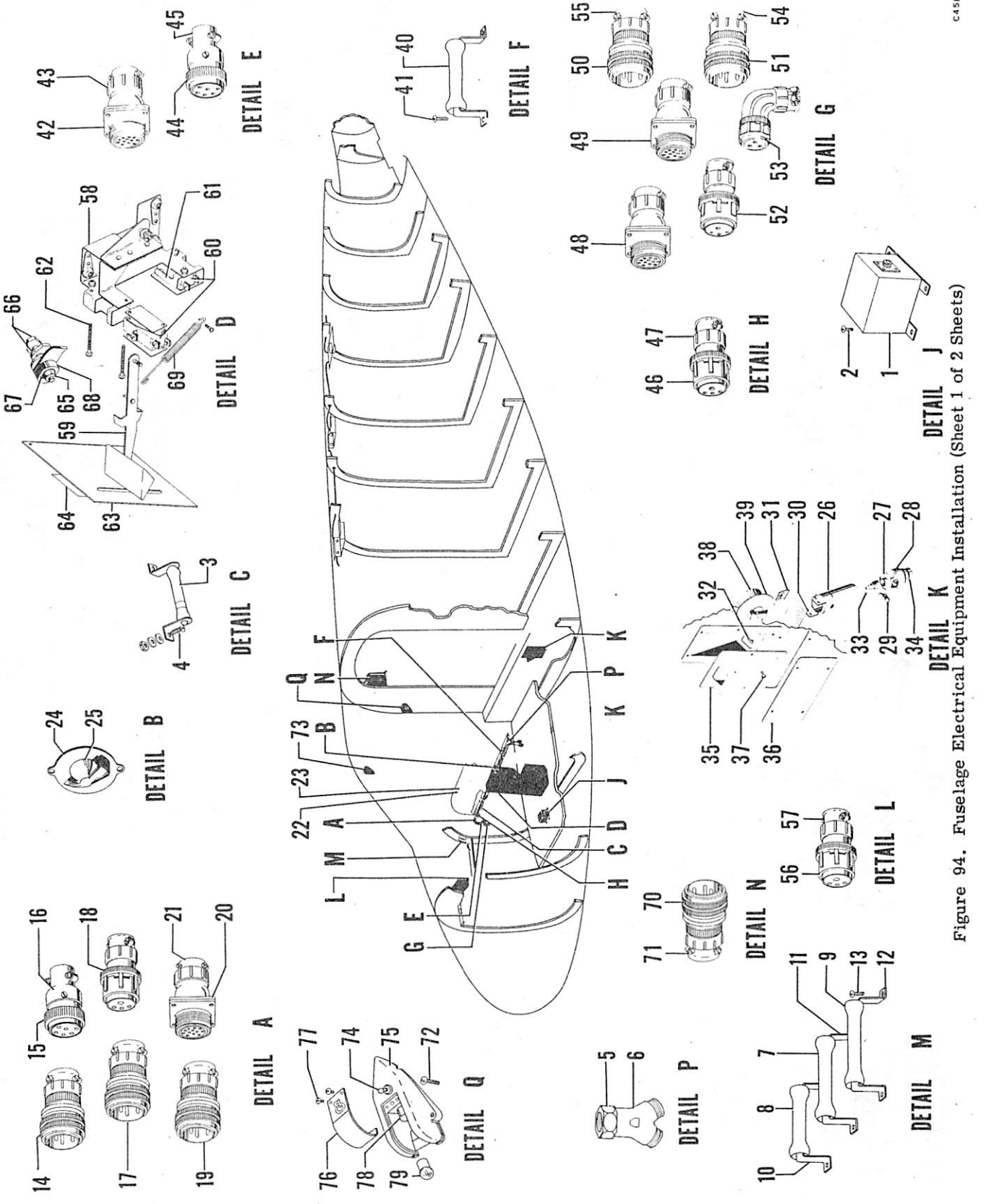

Figure 94. Fuselage Electrical Equipment Installation (Sheet 1 of 2 Sheets)

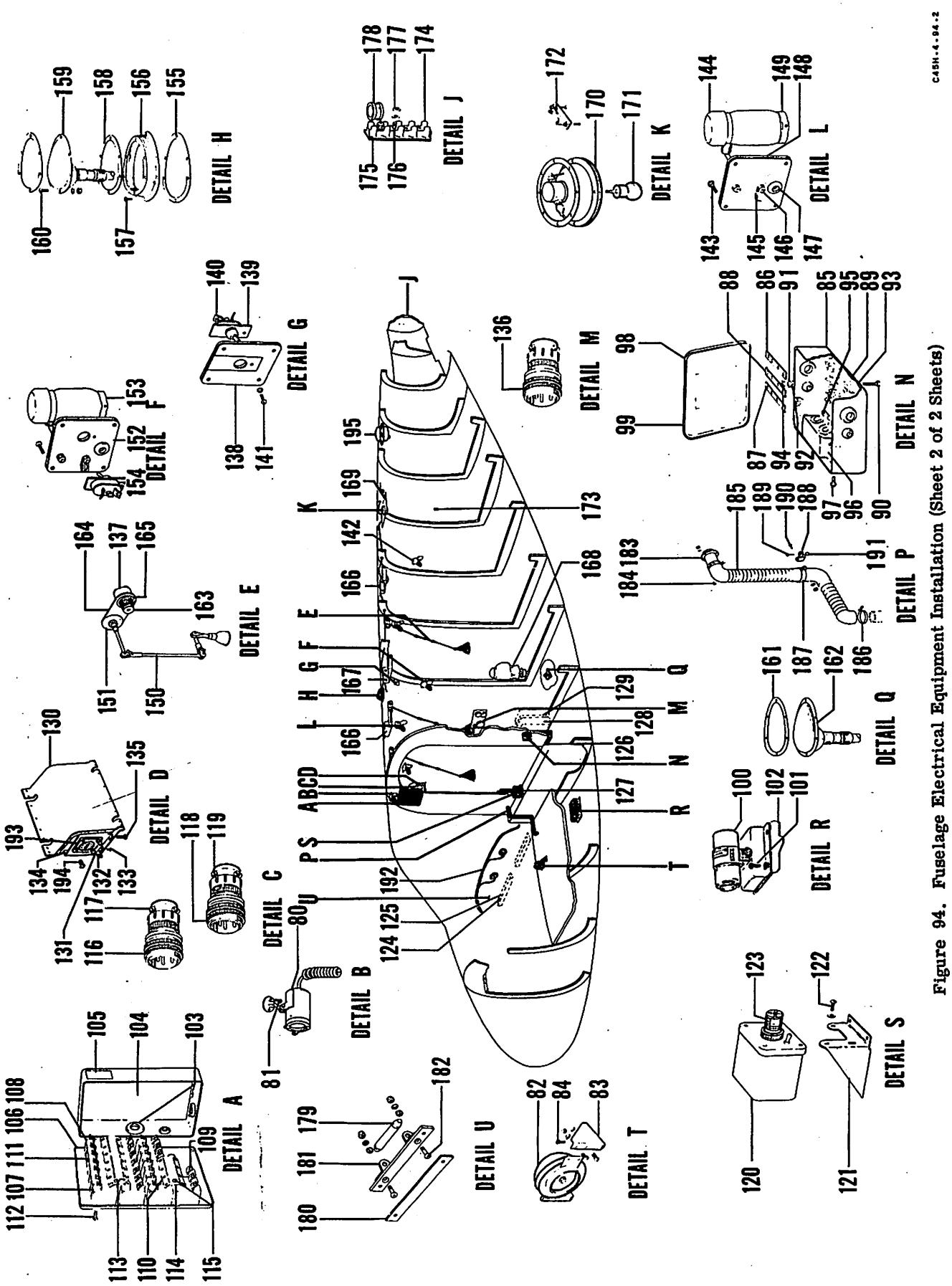

Figure 94. Fuselage Electrical Equipment Installation (Sheet 2 of 2 Sheets)

FIG. & INDEX NO.	PART NO.	DESCRIPTION 1 2 3 4 5 6 7	UNITS PER ASSY	USABLE ON CODE
94	694-180540	EQUIPMENT INSTL,FUSELAGE ELECTRICAL . . . . . /SEE FIG. 1 FOR NHA/	1	A-1
	694-180801	EQUIPMENT INSTL,FUSELAGE ELECTRICAL . . . . . /SEE FIG. 1 FOR NHA/	1	B
	694-180540-9	EQUIPMENT INSTL,FUSELAGE ELECTRICAL . . . . . /SEE FIG. 1 FOR NHA/	1	A-2
	694-180546	. LIGHT INSTL,NOSE TAXI /SEE FIG. 5/.	REF	
- 1	NO NUMBER	. UNIT,FLASHER /TYPE C-2/ /SPECIFICATION 32660/ /ATTACHING PARTS/	1	
- 2	AN526-832-5	. SCREW	2	
	AN526-832-16	. SCREW	2	
	AN960-8	. WASHER.	4	
	AN365-832	. NUT . . . . . ----*----	4	
- 3	37A5222-12	. RESISTOR,/USAF P/N/ . . . . . /ATTACHING PARTS/	1	
- 4	AN526-632-12	. SCREW	2	
	3053	. WASHER,/80112/.	4	
	AN960-6	. WASHER.	2	
	AN340-632	. NUT	2	
	AN365-632	. NUT . . . . . ----*----	2	
	694-180733	. HARNESS ASSY,COPILOTS FLIGHT INSTRUMENT LIGHT	1	
	694-180877	. HARNESS ASSY,PILOTS STANDBY COMPASS	1	
	694-180771	. HARNESS ASSY,ENGINE INSTRUMENT LIGHT.	1	B
	694-180770	. HARNESS ASSY,PILOTS FLIGHT INSTRUMENT LIGHT .	1	B
- 5	AN3068-8	. ADAPTER	1	
- 6	A-24976	. CONNECTOR,Y /78570/	1	
	694-180539	. HARNESS ASSY,LIGHT DIMMING RESISTOR	1	
- 7	RW34F100	. . RESISTOR,/SPECIFICATION JAN-R-26A/.	1	
- 8	RW33F250	. . RESISTOR,/SPECIFICATION JAN-R-26A/.	1	
- 9	RW36F5R0	. . RESISTOR,/SPECIFICATION JAN-R-26A/.	1	
- 10	9	. BRACKET,MOUNTING /44655/.	2	
- 11	12	. BRACKET,MOUNTING /44655/.	2	
- 12	18	. BRACKET,MOUNTING /44655/. . . . . /ATTACHING PARTS/	2	
- 13	AN515-6R7	. SCREW	2	
	AN515-8R7	. SCREW	4	
	AN365-832	. NUT	4	
	AN960-8	. WASHER.	4	
	AN960-6	. WASHER.	2	
	AN365-632	. NUT . . . . . ----*----	2	
	694-180728-3	. HARNESS ASSY,CENTER FUSELAGE.	1	A
	694-180848	. HARNESS ASSY,CENTER FUSELAGE.	1	B
- 14	AN3106A-12S-3S	. . PLUG.	4	
- 15	AN3057-4	. . ADAPTER	6	
- 16	GK-C8-21C-5/8	. . PLUG,ELECTRICAL /71468/	1	
- 17	AN3106A-14S-7S	. . PLUG,ELECTRICAL	1	
	AN3108B-14S-2S	. . PLUG,ELECTRICAL	1	A
- 18	AN3106B-14S-2S	. . PLUG,ELECTRICAL	1	B
- 19	AN3106A-14S-5S	. . PLUG,ELECTRICAL	1	
- 20	AN3100A-12S-3S	. . RECEPTACLE,ELECTRICAL	2	
- 21	AN3057-6	. . ADAPTER	3	
- 22	AN3157-6	. . LAMP ASSY	6	
- 23	AN3121-313	. . LAMP.	6	
	734-183826	. . SWITCH ASSY,FUEL GAGE SELECTOR.	1	
- 24	734-183826-2	. . . SWITCH.	1	
- 25	AN3220-2	. . . KNOB.	1	
	894-183602	. LIGHT INSTL,RADIO CONTROLS.	1	
- 26	404-183601-32	. . CYLINDER ASSY	1	
- 27	404-183601-4	. . REFLECTOR	1	
- 28	404-183601-30	. . CUP ASSY. . . . . /ATTACHING PARTS/	1	
	AN960-10	. . WASHER.	1	
- 29	AN350-1032	. . NUT . . . . . ----*----	1	

FIG. & INDEX NO.	PART NO.	DESCRIPTION 1 2 3 4 5 6 7	UNITS PER ASSY	USABLE ON CODE
94 - 30	894-183602-20	. . LENS,/MAKE FR /77902/ 160/.	1	
- 31	404-183601-28	. . CLIP.	1	
		/ATTACHING PARTS/		
- 32	AN526-832R12	. . SCREW	1	
		----*----		
- 33	AN3124-307	. . LAMP.	1	
- 34	SC2611	. . SOCKET,/13445/.	1	
- 35	894-183605	. . SHIELD.	1	
- 36	404-183601-6	. . COVER	1	
		/ATTACHING PARTS/		
- 37	AN526-832R9	. . SCREW	10	
		----*----		
- 38	AN3155-25-75	. . RHEOSTAT.	1	
- 39	894-180141	. . PLACARD	1	
	694-180737	. HARNESS ASSY,ELECTRICAL CIRCUIT BREAKER BOX .	1	
- 40	NO NUMBER	. . RESISTOR,150 OHM - 10 WATT.	2	
		/ATTACHING PARTS/		
- 41	AN515-8R40	. . SCREW	2	
	AN365-832	. . NUT	2	
	AN960-8	. . WASHER.	2	
	NAS70R177-375	. . WASHER.	4	
		----*----		
	694-180639	. HARNESS ASSY,SUBPANELS.	1	
- 42	AN3100A-14S-7P	. . RECEPTACLE.	1	
- 43	AN3057-6	. . ADAPTER	1	
- 44	GK-C8-21C-5/8	. . PLUG,/71468/.	1	
- 45	1071	. . CONNECTOR,/75915/	1	
	694-180624	. HARNESS ASSY,POSITION LIGHT FLASHER	1	
- 46	AN3016B-16S-8S	. . PLUG.	1	
- 47	AN3057-8	. . ADAPTER	1	
	694-180607	. HARNESS ASSY,NACELLE LH	1	
	694-180634	. HARNESS ASSY,NACELLE RH	1	A-1,B
	694-180634-1	. HARNESS ASSY,NACELLE RH	1	A-2
- 48	AN3100A-14S-7P	. . RECEPTACLE,ELECTRICAL /LH ONLY/	1	
- 49	AN3100A-14S-1P	. . RECEPTACLE,ELECTRICAL	1	
- 50	AN3106A-12S-3S	. . PLUG,ELECTRICAL	1	
- 51	AN3106A-10SL-3S	. . PLUG,ELECTRICAL	1	
	AN3106A-14S-5S	. . PLUG,ELECTRICAL /RH ONLY/	1	
- 52	AN3106B-14S-2S	. . PLUG,ELECTRICAL	1	
- 53	AN3108B-14S-1S	. . PLUG,ELECTRICAL	1	
- 54	AN3057-4	. . ADAPTER	2	
- 55	AN3057-6	. . ADAPTER	4	
	694-180638	. HARNESS ASSY,WINDSHIELD WIPER MOTOR	1	
- 56	AN3106B-18-5S	. . PLUG,ELECTRICAL	1	
- 57	AN3057-10	. . CLAMP	1	
	694-183879	. COVER ASSY,FLAP CONTROL SWITCH.	1	A-2
	694-180641	. HARNESS ASSY,FLAP POSITION SWITCH	1	A-1,B
	694-180641-1	. HARNESS ASSY,FLAP POSITION SWITCH	1	A-2
	894-183863	. . SWITCH ASSY,FLAP.	1	A-1,B
	694-183877	. . SWITCH ASSY,FLAP.	1	A-2
- 58	894-183846	. . . BRACKET ASSY,CONTROL SWITCH MECHANISM . .	1	A-1,B
	694-183877-5	. . . BRACKET ASSY,CONTROL SWITCH MECHANISM . .	1	A-2
- 59	894-183869	. . . LEVER ASSY,FLAP CONTROL SWITCH.	1	A-1,B
	694-183878	. . . LEVER ASSY,FLAP CONTROL SWITCH.	1	A-2
		/ATTACHING PARTS/		
	AN320-3	. . . NUT	1	A-1,B
	AN960-10L	. . . WASHER.	1	A-1,B
	AN380-2-2	. . . PIN,COTTER.	1	A-1,B
	AN392-33	. . . PIN	1	A-2
	AN381-2-5	. . . PIN,COTTER.	1	A-2
		----*----		
- 60	AN3234-1	. . . SWITCH,MICRO.	2	

FIG. & INDEX NO.	PART NO.	DESCRIPTION 1 2 3 4 5 6 7	UNITS PER ASSY	USABLE ON CODE
94 - 61	JV-1	. . . ACTUATOR,AUXILIARY /40228/.	2	A-1,B
	JV-20	. . . ACTUATOR,AUXILIARY /40228/. . . . . /ATTACHING PARTS/	2	A-2
- 62	AN515-4-14	. . . SCREW	4	A-1,B
	AN507-440R20	. . . SCREW	2	A-2
	AN365-440	. . . NUT	4	
		----*----		
	894-183873	. . . DOOR ASSY,FLAP SWITCH	1	A-1,B
- 63	894-183873-1	. . . . DOOR.	1	A-1,B
- 64	734-180034	. . . . PLACARD,FLAP POSITION LEVER	1	A-1,B
- 65	694-183886	. . . SHAFT ASSY,FLAP CONTROL SWITCH.	1	A-2
- 66	694-183885	. . . CAM . . . . . /ATTACHING PARTS/	2	A-2
- 67	52-022-094-0750	. . . PIN,ROLL /72962/.	2	
		----*----		
- 68	694-183881	. SPACER,FLAP CONTROL SWITCH.	1	A-2
- 69	894-183847	. SPRING,FLAP CONTROL SWITCH.	2	A-1,B
	694-180888	. HARNESS ASSY,COMPASS LIGHT RESISTOR	1	
	694-180626	. HARNESS ASSY,GYRO COMPASS JUNCTION BOX. . . .	1	
- 70	AN3106A-14S-6S	. . PLUG,ELECTRICAL	1	
- 71	AN3057-6	. . CLAMP	1	
	694-180805-1	. LIGHT INSTL,PILOTS COMPARTMENT MAP READING LH	1	
	694-180805-2	. LIGHT INSTL,PILOTS COMPARTMENT MAP READING RH /ATTACHING PARTS/	1	
- 72	AN515DD6R6	. SCREW	3	
	AN365D632	. NUT	3	
		----*----		
- 73	694-180798-1	. . LAMP ASSY,PILOTS COMPARTMENT MAP READING LH	1	
	694-180798-3	. . LAMP ASSY,PILOTS COMPARTMENT MAP READING RH	1	
- 74	110-1/4	. . . SWITCH,/73559/.	1	
- 75	814-180756	. . . HOUSING,PILOTS MAP READING LAMP	1	
- 76	814-180757	. . . COVER,PILOTS MAP READING LAMP . . . . . /ATTACHING PARTS/	1	
- 77	AN515-6R4	. . . SCREW	2	
		----*----		
- 78	2051	. . . SOCKET ASSY,/71568/	1	
- 79	AN3131-303	. . . BULB.	1	
	694-180866	. HARNESS ASSY,INSTRUMENT PANEL NAVIGATOR . . .	1	B
- 80	C-4A	. LAMP ASSY,/SPECIFICATION 94-32294/ /GFAE/ . . /ATTACHING PARTS/	2	
- 81	AN515-6-8	. SCREW	4	
	AN960-6	. WASHER.	4	
	AN365-632	. NUT	4	
		----*----		
	694-180756	. HARNESS ASSY,LANDING GEAR WARNING HORN. . . .	1	A-25
	694-180889	. HARNESS ASSY,LANDING GEAR WARNING HORN. . . .	1	A-24
- 82	AN5775-2	. . HORN,WARNING.	1	
- 83	84-180723	. BRACKET,WARNING SIGNAL. . . . . /ATTACHING PARTS/	2	
- 84	AN526-832-16	. SCREW	2	
	AN970-3	. WASHER.	2	
	AN365-832	. NUT	2	
	AN4-4A	. BOLT.	2	
	AN960-416	. WASHER.	2	
	AN365-428	. NUT	2	
		----*----		
	694-180721	. BRACKET ASSY,JUNCTION BOX MOUNTING.	1	A
	694-180719	. BOX ASSY,GYRO MAGNETIC COMPASS JUNCTION . . .	1	A
	694-180802	. BOX ASSY,GYRO MAGNETIC COMPASS JUNCTION . . .	1	B
- 85	694-180719-2	. . BOX,SLAVED GYRO MAGNETIC COMPASS JUNCTION .	1	A
	694-180802-1	. . BOX,SLAVED GYRO MAGNETIC COMPASS JUNCTION .	1	B
- 86	112132-9-12	. . STRIP	1	
- 87	112132-5-8	. . STRIP	1	
- 88	112132-1-4	. . STRIP	1	
- 89	AN3435-2-4	. . BLOCK,TERMINAL.	3	
- 90	AN3432-6-12	. . STUD.	12	
- 91	AN961-6	. . WASHER.	24	

FIG. & INDEX NO.	PART NO.	DESCRIPTION 1 2 3 4 5 6 7	UNITS PER ASSY	USABLE ON CODE
94 - 92	AN936A6B	. . WASHER.	24	
- 93	AN3437-1-5	. . STRIP,INSULATING.	3	
- 94	AN341-6	. . NUT	24	
- 95	AN3433-2-2	. . BAR,BUS	1	
- 96	CP54B1-EE504V	. . CAPACITOR,/SPECIFICATION JAN-C-25/. /ATTACHING PARTS/	1	
- 97	AN526-632-6	. . SCREW	2	
	AN365-632	. . NUT	2	
		----*----		
	694-180722	. . COVER ASSY,GYRO MAGNETIC JUNCTION BOX	1	A
- 98	694-180722-2	. . . COVER,SLAVED GYRO MAGNETIC JUNCTION BOX	1	A
- 99	694-180053	. . . PLACARD,GYRO MAGNETIC JUNCTION BOX.	1	A
	694-180803	. . COVER ASSY,GYRO MAGNETIC JUNCTION BOX	1	B
	694-180803-1	. . . COVER ASSY,GYRO MAGNETIC JUNCTION BOX	1	B
	694-180063	. . . PLACARD,JUNCTION BOX WARNING.	1	B
	694-180025	. . . PLACARD,MAGNETIC COMPASS JUNCTION BOX	1	B
-100	AN3499-1	. INVERTER. /ATTACHING PARTS/	1	
-101	AN3-16	. BOLT.	4	
	AN960-10	. WASHER.	4	
	AN365-1032	. NUT	4	
		----*----		
-102	694-180554	. BRACKET ASSY,INVERTER MOUNTING.	1	
	694-180617	. BOX ASSY,ELECTRICAL CIRCUIT BREAKER	1	
-103	694-180617-2	. . BOX,ELECTRICAL CIRCUIT BREAKER.	1	
-104	694-180042	. . PLACARD,ELECTRICAL CIRCUIT BREAKER WIRING	1	
-105	694-180063	. . PLACARD,JUNCTION BOX WARNING.	1	
	694-180616	. LID ASSY,ELECTRICAL CIRCUIT BREAKER BOX	1	A-1,B
	694-180616-6	. LID ASSY,ELECTRICAL CIRCUIT BREAKER BOX	1	A-2
-106	694-180616-2	. . LID,ELECTRICAL CIRCUIT BREAKER BOX.	1	
-107	49B6768-5	. . BREAKER,PUSH BUTTON TRIP FREE CIRCUIT	7	
-108	49B6768-10	. . BREAKER,PUSH BUTTON TRIP FREE CIRCUIT	10	A-1,B
	49B6768-10	. . BREAKER,PUSH BUTTON TRIP FREE CIRCUIT	11	A-2
-109	49B6768-15	. . BREAKER,PUSH BUTTON TRIP FREE CIRCUIT	2	
-110	49B6768-20	. . BREAKER,PUSH BUTTON TRIP FREE CIRCUIT	3	
-111	49B6768-25	. . BREAKER,PUSH BUTTON TRIP FREE CIRCUIT /ATTACHING PARTS/	2	
-112	AN515-6R7	. . SCREW	2	
		----*----		
-113	694-180614	. . BAR,BUS	1	
-114	694-180615	. . BAR,BUS /ATTACHING PARTS/	1	
-115	AN515-8R6	. . SCREW	1	
	AN935-8	. . WASHER.	1	
	AN365-832	. . NUT	1	
		----*----		
	694-180633	. HARNESS ASSY,INBD REMOTE COMPASS.	1	
-116	AN3106A-16S-1S	. . PLUG,ELECTRICAL	1	
-117	AN3057-8	. . CLAMP	1	
-118	AN3106A-14S-5P	. . PLUG,ELECTRICAL	1	
-119	AN3057-6	. . CLAMP	1	
	804-180866	. LAMP ASSY,COCKPIT EXTENSION	1	
-120	B-7	. . LAMP,/SPECIFICATION 94-32328/ /GFAE/.	1	
-121	694-180993	. BRACKET,COCKPIT EXTENSION LAMP. /ATTACHING PARTS/	1	B
-122	AN515-6-8	. SCREW	2	
	AN515-8-8	. SCREW	5	
	AN960-6	. WASHER.	2	
	AN936-138	. WASHER.	5	
		----*----		
-123	AN3127-302	. BULB.	1	
	694-180849	. HARNESS ASSY,POWER & CONTROL GENERATOR.	1	B
	694-180849-3	. . HARNESS ASSY,POWER & CONTROL GENERATOR.	1	B
	694-180849-5	. . HARNESS ASSY,POWER & CONTROL GENERATOR.	1	B
-124	AN3157-6	. . LIGHT ASSY.	2	B
-125	AN3121-313	. . LAMP.	2	B

FIG. & INDEX NO.	PART NO.	DESCRIPTION 1 2 3 4 5 6 7	UNITS PER ASSY	USABLE ON CODE
94	694-180541-1	• BOX INSTL,GENERATOR CONTROL	1	A
-126	694-180570-4	• • BOX ASSY,GENERATOR CONTROL /SEE FIG. 95/ •	1	A
-127	694-180570-5	• • BOX ASSY,GENERATOR CONTROL /SEE FIG. 95/ •	1	A
-128	694-180850	• BOX ASSY,GENERATOR CONTROL RH /SEE FIG. 95/ •	1	B
-129	694-180862	• BOX ASSY,GENERATOR CONTROL LH /SEE FIG. 95/ •	1	
-130	694-180535	• COVER ASSY,GYROSYN COMPASS MASTER INDICATOR •	1	
	694-180531	• SUPPORT ASSY,GYROSYN COMPASS MASTER INDICATOR	1	
-131	694-180531-2	• • SUPPORT,GYROSYN COMPASS MASTER INDICATOR •	1	
-132	AN8008D2	• • INSULATOR,VIBRATION	4	
		/ATTACHING PARTS/		
-133	AN515-6-6	• • SCREW	4	
	AN960-6	• • WASHER	4	
	AN365-632	• • NUT	4	
		----*----		
-134	694-180533	• MOUNT ASSY,GYROSYN COMPASS MASTER INDICATOR •	1	
		/ATTACHING PARTS/		
-135	AN515-8-14	• SCREW	4	
	AN365-832	• NUT	4	
	AN960-8	• WASHER	4	
	AN515-8R16	• SCREW	1	
	100696-D8-06-018	• SPACER	1	
	AN365-832	• NUT	1	
		----*----		
	694-180861	• HARNESS ASSY,B-3 DRIFTMETER	1	B
	694-180832	• HARNESS ASSY,V-3 GYROSYN REPEATER	1	B
-136	AN3106A-14S-5S	• • PLUG	1	B
	894-180625	• HARNESS ASSY,OVERHEAD CABIN LH	1	A-1
	694-180720	• HARNESS ASSY,OVERHEAD CABIN RH	1	A-1
	694-180846	• HARNESS ASSY,CABIN READING LIGHT RH	1	B
	694-180813	• HARNESS ASSY,CABIN TABLE LIGHT	1	B
	694-180868-1	• HARNESS ASSY,CABIN TABLE LIGHT RHEOSTAT	1	B
	694-180868-3	• HARNESS ASSY,CABIN TABLE LIGHT RHEOSTAT	1	B
	694-180868-5	• HARNESS ASSY,CABIN TABLE LIGHT RHEOSTAT	1	B
-137	0147-351	• • RHEOSTAT,/44655/	3	
-138	694-180875	• BASE ASSY,DOME LIGHT SWITCH	1	B
	894-180024	• • PLACARD,RED DOME LIGHT SWITCH	2	
-139	694-180874	• PAD,BASE DOME LIGHT SWITCH	1	
-140	AN3021-2	• SWITCH	1	
		/ATTACHING PARTS/		
-141	AN515-8-6	• SCREW	8	
		----*----		
-142	824-180605	• LAMP ASSY,CABIN MAP READING	2	A-1,B
		/ATTACHING PARTS/		
-143	AN515-6-10	• SCREW	4	
	AN960-6	• WASHER	4	
	AN365-632	• NUT	4	
		----*----		
-144	NO NUMBER	• • LAMP,/TYPE C-4/ /SPECIFICATION 94-32294/ •	1	A-1,B
-145	AN742D4	• • CLAMP	1	A-1,B
		/ATTACHING PARTS/		
-146	AN515-6-10	• • SCREW	2	
	AN960-6	• • WASHER	2	
	AN365-632	• • NUT	2	
		----*----		
-147	824-180606	• • PAD,MAP READING LAMP BASE	2	
-148	824-180609	• • BASE,MAP READING LAMP	2	
-149	AN3131-303	• BULB	2	
-150	AN3047-9	• LIGHT ASSY	3	B
		/ATTACHING PARTS/		
-151	AN520-10R16	• SCREW	6	
		----*----		
-152	694-180564	• BASE,MAP READING LAMP	2	A-1
	694-180517	• BASE,CABIN DOME LIGHT SWITCH	2	A-2
-153	694-180606	• PAD,MAP READING LAMP	2	A
-154	AN3021-2	• SWITCH	2	A

FIG. & INDEX NO.	PART NO.	DESCRIPTION 1 2 3 4 5 6 7	UNITS PER ASSY	USABLE ON CODE
94	784-180740	. LIGHTS INSTL,FUSELAGE CLEARANCE	1	
-155	784-180743	. . SEAL,TOP FUSELAGE LIGHT SPACER.	1	
-156	784-180741	. . SPACER,TOP FUSELAGE NAVIGATION LIGHT. . . .	1	
		/ATTACHING PARTS/		
-157	AN526-632-7	. . SCREW	6	
		----*----		
-158	784-180742	. . SEAL,FUSELAGE CLEARANCE LIGHT	1	
-159	AN3097-13	. . LIGHT ASSY.	1	
		/ATTACHING PARTS/		
-160	AN526-632-7	. . SCREW	6	
	AN960-6	. . WASHER.	6	
	AN365-632	. . NUT	6	
		----*----		
-161	784-180742	. . SEAL,FUSELAGE CLEARANCE LIGHT	1	
-162	AN3097-2	. . LIGHT ASSY.	1	
-163	5100	. KNOB,RHEOSTAT /44655/	3	B
	644-180541	. PLATE ASSY,TABLE LAMP BASE.	3	B
-164	644-180541-2	. . PLATE,TABLE LAMP BASE	1	B
-165	644-180037	. . PLACARD	1	B
	644-180628	. HARNESS ASSY,CABIN & TAIL LIGHTS.	1	A-1
	644-180837	. HARNESS ASSY,CABIN & TAIL LIGHTS.	1	B
	644-180628-1	. HARNESS ASSY,CABIN & TAIL LIGHTS.	1	A-2
	644-180746	. HARNESS ASSY,FRONT CABIN DOME LIGHTS. . . .	1	A-1
-166	AN3400-2	. . LIGHT ASSY,DOME	1	A-1
	694-180561	. HARNESS ASSY,CENTER CABIN DOME LIGHTS . . .	1	
-167	AN3400-2	. . LIGHT ASSY,DOME	1	
-168	E-1002-13-20	. PLUG,DRIFTMETER /08484/	1	B
	694-180750	. HARNESS ASSY,REAR CABIN DOME LIGHTS	1	
-169	AN3400-2	. . LIGHT ASSY,DOME	1	
-170	AN3037-2	. LIGHT ASSY.	1	
-171	AN3124SB307	. BULB.	1	
-172	AN3021-2	. SWITCH.	1	
-173	694-180024	. PLACARD,RED DOME LIGHT SWITCH	1	
	694-180063	. PLACARD,JUNCTION BOX WARNING.	1	A
-174	AN3435-2-4	. BLOCK,TERMINAL.	1	
-175	AN3437-1-5	. BASE,INSULATING	1	
-176	AN3432-6-12	. STUD.	4	
-177	AN961-6	. WASHER.	8	
-178	AN742D5	. CLAMP	1	
-179	37A5222-12	. RESISTOR,COMPASS DIMMING /USAF P/N/	1	
-180	404-180543	. INSULATION,COMPASS DIMMING RESISTOR	1	
-181	404-180821	. CLIP,COMPASS DIMMING RESISTOR	1	
		/ATTACHING PARTS/		
-182	AN507-632-9	. SCREW	2	
	AN960-6	. WASHER.	2	
	AN340-6	. NUT	2	
	AN365-632	. NUT	2	
		----*----		
-183	694-180901	. FLANGE ASSY,HOT AIR EXHAUST GEN. CONTROL BOX.	2	A-2
		/ATTACHING PARTS/		
-184	AN515-8-8	. SCREW	4	
	AN960-8	. WASHER.	4	
	AN365-832	. NUT	4	
		----*----		
-185	109645-039-1-A	. HOSE,HOT AIR EXHAUST GENERATOR CONTROL BOX. .	2	A-2
-186	AN737RM38	. CLAMP,HOT AIR EXHAUST HOSE.	2	A-2
-187	AN742D19	. CLAMP,HOT AIR EXHAUST HOSE.	2	A-2
-188	AN743-12	. BRACKET	2	A-2
		/ATTACHING PARTS/		
-189	AN520-10-18	. SCREW	2	
-190	AN520-10-10	. SCREW	2	
	AN365-1032	. NUT	2	
		----*----		
-191	100801-D3-0562	. SPACER.	2	A-2
-192	694-180929	. HARNESS ASSY,HYDROMATIC PROPELLER	1	A-2
	AN3100A-12S-4P	. . RECEPTACLE.	2	A-2

FIG. & INDEX NO.	PART NO.	DESCRIPTION 1 2 3 4 5 6 7	UNITS PER ASSY	USABLE ON CODE
94 -193	664255	. INDICATOR,/TYPE V-1/ /SPECIFICATION 27634/. . /USE AFTER T.O. 1C-45-511 HAS BEEN COMPLIED WITH/ /GFAE/ /ATTACHING PARTS/	1	
-194	AN501-10-12	. SCREW . . . . . ----*----	4	
-195	G-7740-24	LIGHT ASSY,ANTI-COLLISION /72914/ . . . . . /SEE T.O. 8D10-6-5-3/ /ATTACHING PARTS/	1	
	AN515-6-8	SCREW . . . . . ----*----	5	

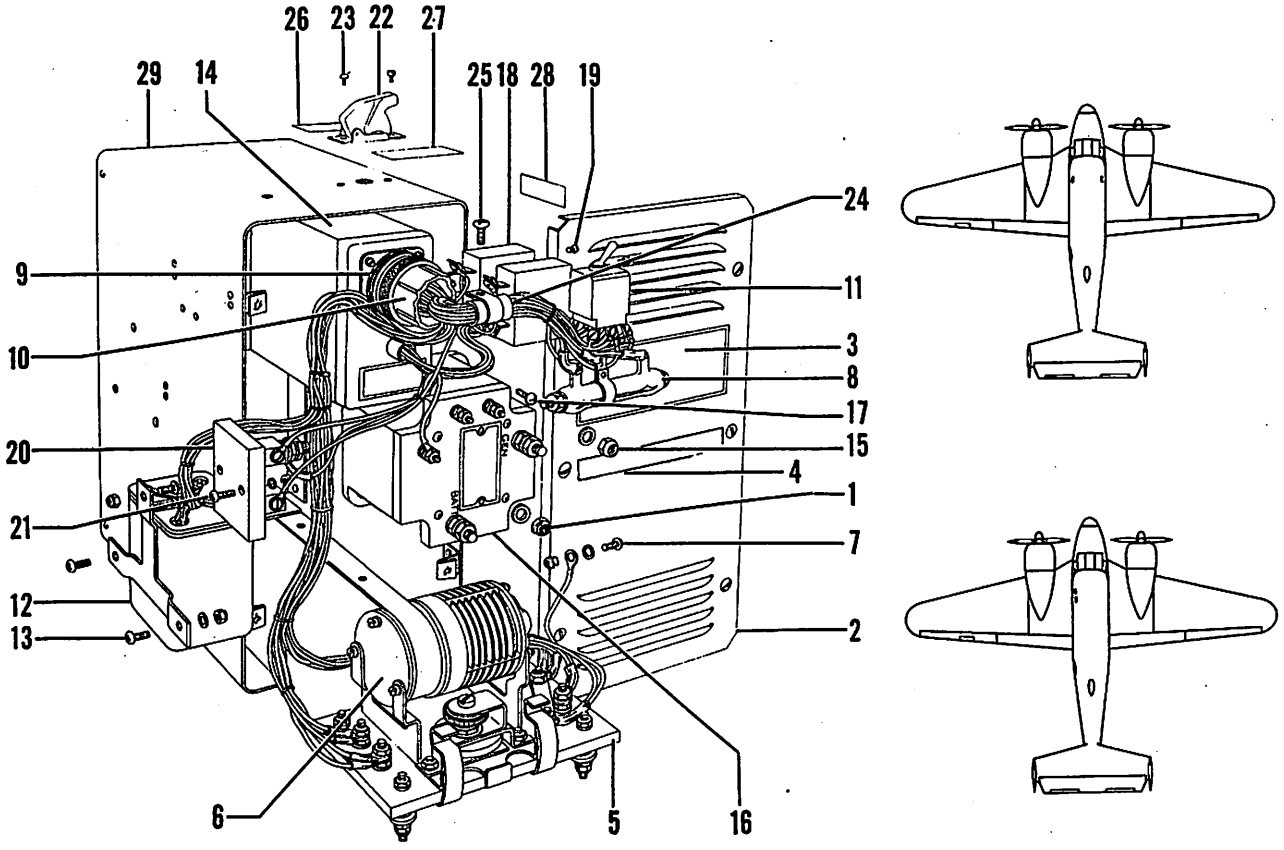

Figure 95. Generator Control Box Assembly

C45H-4-95

FIG. & INDEX NO.	PART NO.	DESCRIPTION 1 2 3 4 5 6 7	UNITS PER ASSY	USABLE ON CODE
95	694-180570-4	BOX ASSY,GENERATOR CONTROL LH . . . . . /SEE FIG. 94 FOR NHA/	REF	A
	694-180862	BOX ASSY,GENERATOR CONTROL LH . . . . . /SEE FIG. 94 FOR NHA/	REF	B
	694-180570-5	BOX ASSY,GENERATOR CONTROL RH . . . . . /SEE FIG. 94 FOR NHA/	REF	A
	694-180850	BOX ASSY,GENERATOR CONTROL RH . . . . . /SEE FIG. 94 FOR NHA/ /ATTACHING PARTS/	REF	B
- 1	AN520-10-10	SCREW	5	
	AN960-10	WASHER.	5	
	AN365-1032	NUT	5	
		-----*-----		
- 2	694-180572	. LID ASSY,GENERATOR CONTROL BOX LH	1	
	694-180572-1	. LID ASSY,GENERATOR CONTROL BOX RH	1	
	694-180117	. . PLACARD,LEFT GENERATOR CONTROL BOX LID. . .	1	
	694-180111	. . PLACARD,RIGHT GENERATOR CONTROL BOX LID . .	1	
- 3	694-180092	. . PLACARD,GENERATOR CONTROL BOX LID	1	
- 4	694-180063	. . PLACARD,JUNCTION BOX WARNING /LH ONLY/. . .	1	
- 5	49C7573	. BASE,VOLTAGE REGULATOR ASSY /GFAE/.	1	
- 6	1042-17A	. REGULATOR,VOLTAGE /19315/	1	
- 7	AN526-832-14	. SCREW	1	
	AN340-8	. NUT	1	
	AN365-832	. NUT	1	

FIG. & INDEX NO.	PART NO.	DESCRIPTION 1 2 3 4 5 6 7	UNITS PER ASSY	USABLE ON CODE
95	694-180740-1	. HARNESS ASSY,GENERATOR FIELD CONTROL RELAY LH	1	A
	694-180865	. HARNESS ASSY,GENERATOR FIELD CONTROL RELAY LH	1	B
	694-180745-1	. HARNESS ASSY,GENERATOR FIELD CONTROL RELAY RH	1	A
	694-180864	. HARNESS ASSY,GENERATOR FIELD CONTROL RELAY RH	1	B
- 8	0360B	. . RESISTOR,25 WATT - 2 OHM /44655/.	1	
- 9	AN3108B-24-7S	. . PLUG.	1	
- 10	AN3057-16	. . ADAPTER	1	
- 11	AN3227-5	. . SWITCH.	1	
- 12	TD805H-3	. . RELAY,GENERATOR OVERVOLTAGE /TYPE RYU-1/A/. /74063/	1	A
	NO NUMBER	. . RELAY,GENERATOR OVERVOLTAGE /TYPE E-2/. . . /SPECIFICATION MIL-R-6467/ /ATTACHING PARTS/	1	B
- 13	AN526-1032-8	. . SCREW	3	
	AN960-10	. . WASHER.	3	
	AN365-1032	. . NUT	3	
		----*----		
- 14	TD805H-3	. RELAY,GENERATOR OVERVOLTAGE /TYPE RYU-1/A/. . /74063/ /ATTACHING PARTS/	1	
- 15	AN526-1032-10	. SCREW	4	
	AN960-10	. WASHER.	4	
	AN365-1032	. NUT	4	
		----*----		
- 16	AN3025-1	. RELAY,REVERSE CURRENT . . . . . /ATTACHING PARTS/	1	
- 17	AN526-1032-9	. SCREW	4	
	AN960-10	. WASHER.	4	
	AN365-1032	. NUT	4	
		----*----		
- 18	49B6768-5	. BREAKER,GENERATOR CONTROL CIRCUIT . . . . . /ATTACHING PARTS/	2	
- 19	AN526-632-6	. SCREW	4	
		----*----		
- 20	54C109	. SHUNT,/99246/ . . . . . /ATTACHING PARTS/	1	
- 21	AN526-832-10	. SCREW	2	
	AN960-8	. WASHER.	2	
	AN365-832	. NUT	2	
		----*----		
- 22	AN3028-3	. GUARD,SWITCH. . . . . /ATTACHING PARTS/	1	
- 23	AN515-6-7	. SCREW	1	
	AN503-6-8	. SCREW	1	
		----*----		
- 24	AN742-10C	. CLAMP . . . . . /ATTACHING PARTS/	1	A
- 25	AN526-832-8	. SCREW	1	
	AN960-8	. WASHER.	1	
	AN365-832	. NUT	1	
		----*----		
- 26	694-180017	. PLACARD,GENERATOR CONTROL SWITCH LH	1	
	694-180018	. PLACARD,GENERATOR CONTROL SWITCH RH	1	
- 27	804-180092	. PLACARD,GENERATOR CONTROL BOX	1	
- 28	694-180045	. PLACARD,AMMETER CIRCUIT BREAKER LH.	1	
	694-180050	. PLACARD,AMMETER CIRCUIT BREAKER RH.	1	
- 29	694-180571	. BOX ASSY,GENERATOR CONTROL LH	1	A
	694-180863	. BOX ASSY,GENERATOR CONTROL LH	1	B
	694-180571-1	. BOX ASSY,GENERATOR CONTROL RH	1	A
	694-180851	. BOX ASSY,GENERATOR CONTROL RH	1	B

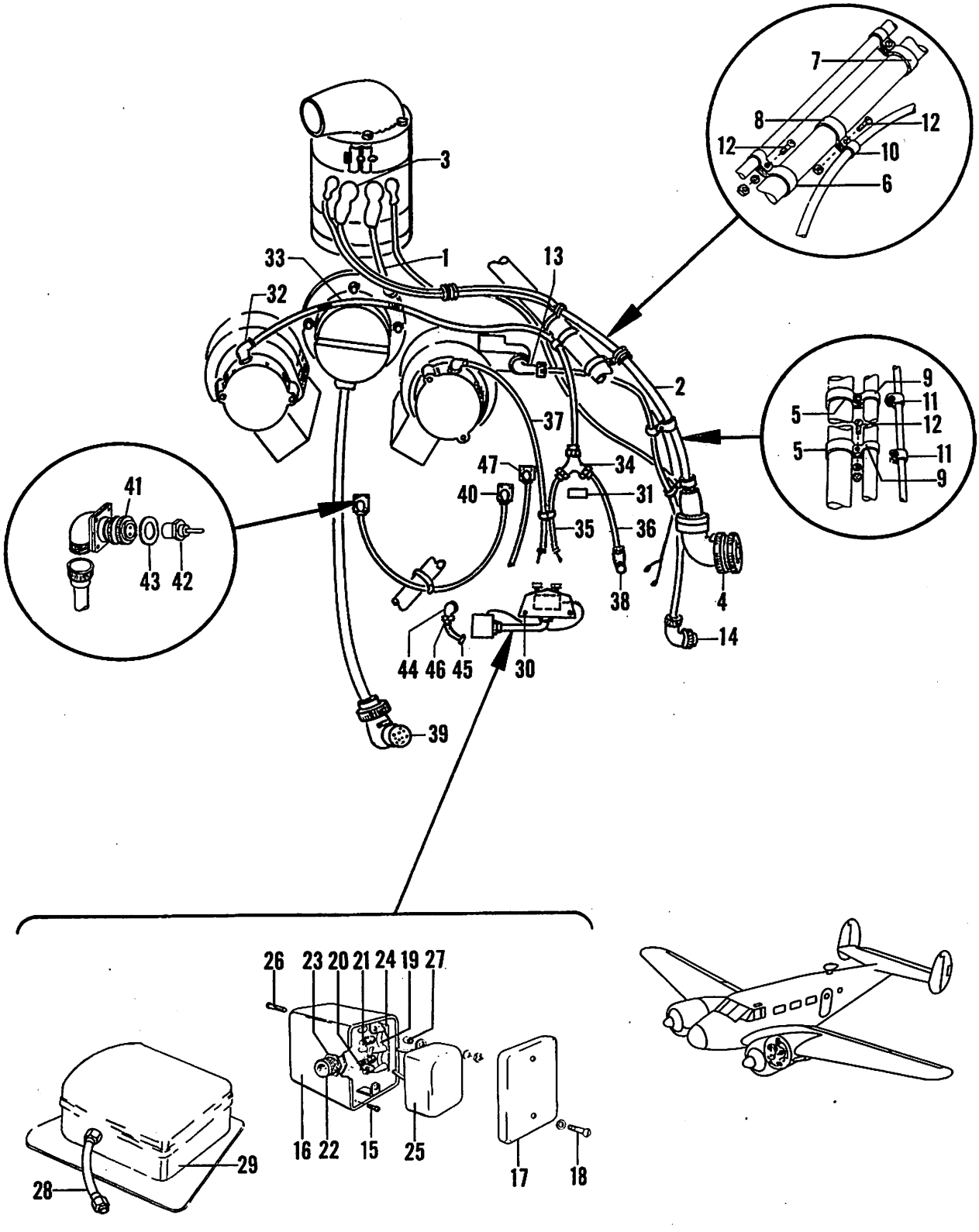

Figure 96. Firewall Electrical Equipment Installation

C45H-4-96

FIG. & INDEX NO.	PART NO.	DESCRIPTION 1 2 3 4 5 6 7	UNITS PER ASSY	USABLE ON CODE
96	694-180555	EQUIPMENT INSTL,FIREWALL ELECTRICAL LH. . . . . /SEE FIG. 1 FOR NHA/	1	A-1,B
	694-180555-4	EQUIPMENT INSTL,FIREWALL ELECTRICAL LH. . . . . /SEE FIG. 1 FOR NHA/	1	A-2
	694-180555-1	EQUIPMENT INSTL,FIREWALL ELECTRICAL RH. . . . . /SEE FIG. 1 FOR NHA/	1	A-1,B
	694-180555-5	EQUIPMENT INSTL,FIREWALL ELECTRICAL RH. . . . . /SEE FIG. 1 FOR NHA/	1	A-2
- 1	694-180555-7	. HARNESS ASSY,GENERATOR LH	1	
	694-180555-8	. HARNESS ASSY,GENERATOR RH	1	
- 2	694-180937	. HARNESS ASSY,100 AMPERE GENERATOR LH.	1	
	694-180939	. HARNESS ASSY,100 AMPERE GENERATOR RH.	1	
- 3	AN781-4	. . NIPPLE,ELECTRICAL TERMINAL.	2	
	106242-8-03200	. . INSULATION.	1	
- 4	694-180937-1	. . PLUG,ELECTRICAL	1	
	694-180939-1	. . PLUG,ELECTRICAL	1	
	AN3057-16A	. . ADAPTER	1	
	AN3420-12	. . BUSHING	1	
	AN3420-16	. . BUSHING	1	
- 5	AN742D10C	. CLAMP	2	
- 6	AN742D20	. CLAMP	1	
- 7	AN742D16	. CLAMP	2	
- 8	MS21919D6-18	. CLAMP	2	
- 9	AN742D4	. CLAMP	2	
- 10	AN742D6	. CLAMP	2	
- 11	105933-5	. CLAMP . . . . . /ATTACHING PARTS/	2	
- 12	AN515-8-10	. SCREW	1	
	AN365-832	. NUT	1	
		----*----		
	694-180559	. HARNESS ASSY,TACHOMETER GENERATOR	1	
- 13	AN3108B-14S-1S	. . PLUG.	1	
- 14	694-180559-2	. . PLUG.	1	
	694-180556	. BOX ASSY,RADIO INTERFERENCE ELIMINATOR LH . .	1	
	694-180556-1	. BOX ASSY,RADIO INTERFERENCE ELIMINATOR RH . . /ATTACHING PARTS/	1	
- 15	AN515-8-7	. SCREW	4	
	AN960-8	. WASHER.	4	
	AN365-832	. NUT	4	
		----*----		
	694-180556-2	. . BOX,RADIO INTERFERENCE ELIMINATOR RH. . . .	1	
- 16	694-180556-3	. . BOX,RADIO INTERFERENCE ELIMINATOR LH. . . .	1	
- 17	694-180556-4	. . LID,RADIO INTERFERENCE ELIMINATOR . . . . . /ATTACHING PARTS/	1	
- 18	AN515-6-8	. . SCREW	2	
	AN960-6	. . WASHER.	2	
		----*----		
- 19	NAS17-2A	. . CONNECTOR,PANEL . . . . . /ATTACHING PARTS/	1	
- 20	AN515-5-6	. . SCREW	1	
- 21	AN515-6-14	. . SCREW	1	
	AN960-4	. . WASHER.	1	
	AN960-6	. . WASHER.	2	
	AN936A6	. . WASHER.	1	
	AN340-4	. . NUT	1	
	AN340-6	. . NUT	1	
		----*----		
- 22	AN3064-4	. . CONNECTOR	1	
- 23	AN3066-4	. . NUT,LOCK.	1	
- 24	694-180556-6	. . INSULATOR	1	
- 25	CP53B1EC105K	. . CAPACITOR,/SPECIFICATION JAN-C-25/. . . . . /ATTACHING PARTS/	1	
- 26	AN507-632-10	. . SCREW	2	
	AN960-6	. . WASHER.	2	
	AN365-632	. . NUT	2	
		----*----		

FIG. & INDEX NO.	PART NO.	DESCRIPTION 1 2 3 4 5 6 7	UNITS PER ASSY	USABLE ON CODE
96 - 27	AN931-5-9	. . GROMMET	1	
	NAS20-6-12	. . STUD.	1	
	AN960-6	. . WASHER.	1	
	AN936A6	. . WASHER.	1	
	AN340-6	. . NUT	1	
	106242-1A-00200	. . INSULATION.	2	
- 28	894-180904	. CONDUIT ASSY,INDUCTION VIBRATOR	1	
	AN960-516	. WASHER.	1	
- 29	VJR24B-5X	. VIBRATOR,INDUCTION /01843/. /ATTACHING PARTS/	1	
- 30	AN520-10-14	. SCREW	3	
	AN960-10	. WASHER.	3	
	AN365-1032	. NUT	3	
		----*----		
- 31	814-180019	. PLACARD	2	
	694-180754	. HARNESS ASSY,LEFT ENGINE MAGNETO.	1	
	694-180755	. HARNESS ASSY,RIGHT ENGINE MAGNETO	1	
- 32	3355-2	. . ELBOW,/08484/	2	
	3380-1	. . INSERT,/08484/.	2	
- 33	734-180901	. . CONDUIT ASSY.	1	
- 34	A24976	. . CONNECTOR,Y /78570/	1	
- 35	734-180902	. . CONDUIT ASSY,INDUCTION VIBRATOR	1	
- 36	734-180903	. . CONDUIT ASSY,OUTBD MAGNETO.	1	
- 37	734-180904	. . CONDUIT ASSY,INBD MAGNETO	1	
- 38	AN3108A-18-22S	. . PLUG.	1	
	694-180741	. HARNESS ASSY,LEFT STARTER	1	
	694-180751	. HARNESS ASSY,RIGHT STARTER.	1	
- 39	694-180741-2	. . PLUG.	1	
	694-180751-2	. . PLUG.	1	
	694-180560	. HARNESS ASSY,CARBURETOR AIR TEMPERATURE BULB.	2	
- 40	AN3106B-12S-3P	. . PLUG.	1	
- 41	AN3108B-12S-3S	. . PLUG.	1	
- 42	AN5525-1	. BULB,RESISTANCE CARBURETOR AIR TEMPERATURE.	1	
- 43	AN900-10	. GASKET.	1	
	694-180735	. HARNESS ASSY,ENGINE PRIMER.	2	
- 44	AN3108B-10S-2S	. . PLUG.	1	
- 45	AN3106A-14S-7S	. . PLUG.	1	
- 46	AN3057-3	. . ADAPTER	1	
- 47	694-180568	. HARNESS ASSY,FEATHERING RELAY	2	A-2
	AN3108B-12S-4S	. . PLUG.	2	

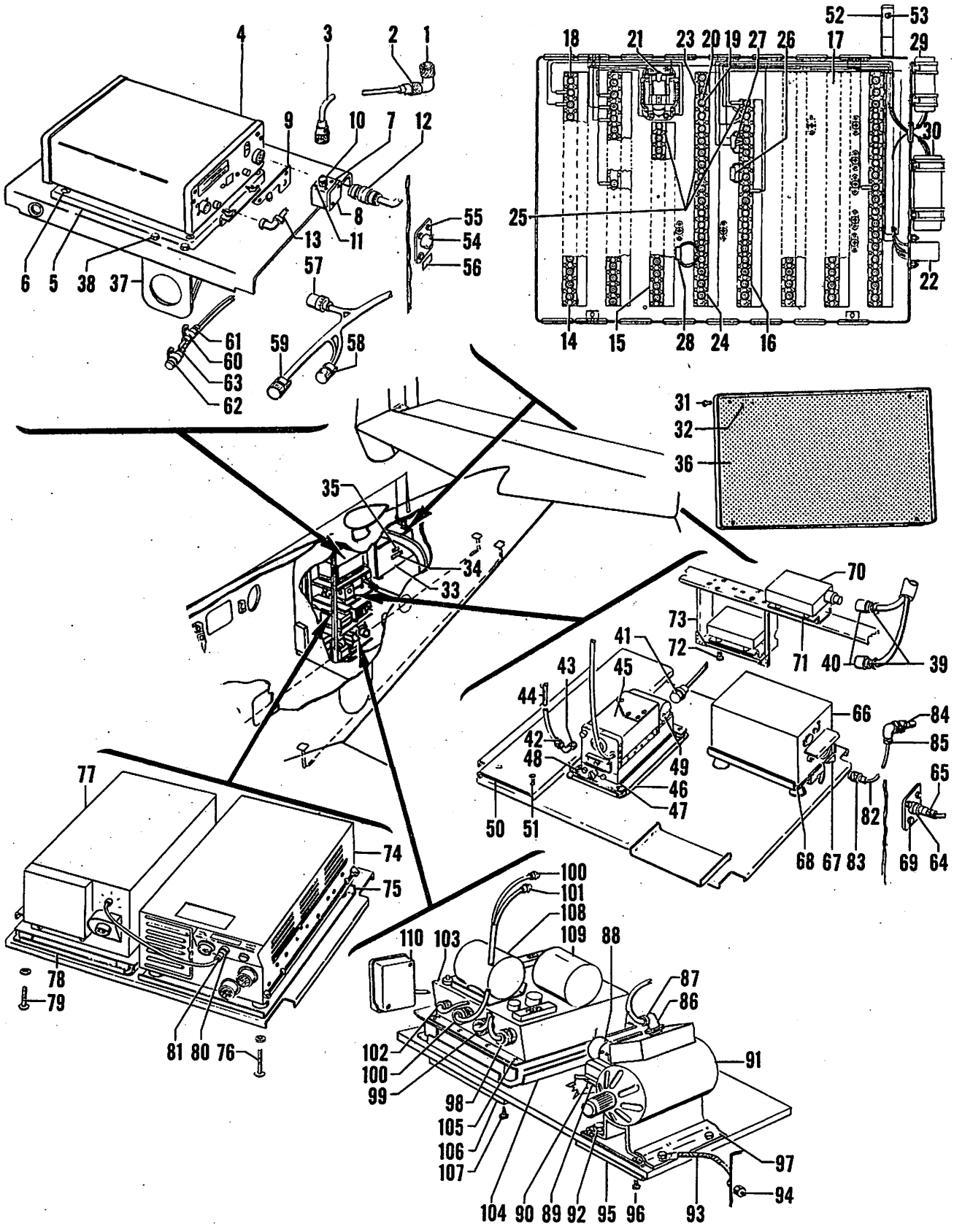

Figure 97. Radio Equipment Installation (Sheet 1 of 2 Sheets)

C45H-4-97.1

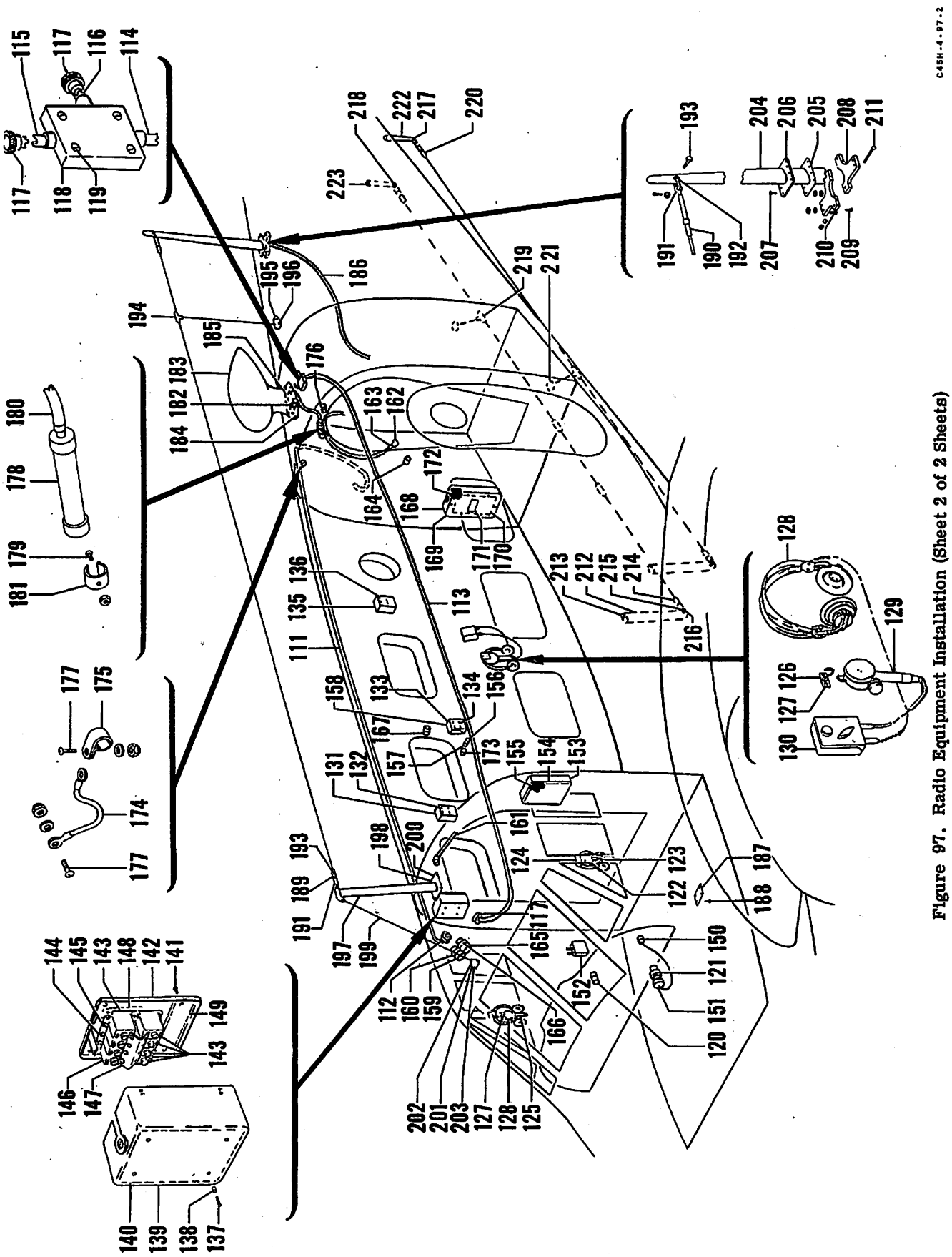

Figure 97. Radio Equipment Installation (Sheet 2 of 2 Sheets)

FIG. & INDEX NO.	PART NO.	DESCRIPTION 1 2 3 4 5 6 7	UNITS PER ASSY	USABLE ON CODE
97	694-180670	EQUIPMENT INSTL,RADIO /SEE FIG. 1 FOR NHA/	1	A-1
	694-180701	EQUIPMENT INSTL,RADIO /SEE FIG. 1 FOR NHA/	1	B
	694-180670-7	EQUIPMENT INSTL,RADIO /SEE FIG. 1 FOR NHA/	1	A-2
	694-180718	. CABLE ASSY,AN/ARN-7 SENSE ANTENNA	1	
- 1	PL-259-A	. . PLUG,/80063/	2	
- 2	M-359	. . ADAPTER,/80063/	1	
- 3	694-180718-2	. . CABLE,COAXIAL	1	
- 4	R-5/ARN-7	. RECEIVER,/GFAE/	1	
- 5	FT-213-A	. MOUNTING,/GFAE/	1	
		/ATTACHING PARTS/		
- 6	AN520-10-8	. SCREW	6	A
	AN520-10-6	. SCREW	6	B
	AN960-10	. WASHER	6	
	AN365-1032	. NUT	6	
		----*----		
	694-180743	. BOX ASSY,AN/ARN-7 RADIO NOISE SHIELD	1	
- 7	694-180744	. . BOX ASSY,RADIO NOISE SHIELD	1	
- 8	694-180753	. . LID,RADIO NOISE SHIELD	1	
- 9	694-180742	. . BRACKET ASSY,RADIO NOISE SHIELD	1	
- 10	83-1R	. . RECEPTACLE,COAXIAL /02660/	1	
		/ATTACHING PARTS/		
- 11	AN515-4-7	. . SCREW	4	
	AN365-440	. . NUT	4	
		----*----		
	694-180652	. HARNESS ASSY,R-5/ARN-7 RADIO COMPASS RECEIVER	1	A
	694-180841	. HARNESS ASSY,R-5/ARN-7 RADIO COMPASS RECEIVER	1	B
- 12	PL-122	. . PLUG,/80063/	1	
- 13	CD-365	. CORD,/GFAE/	1	
	CD-365A	. CORD,/GFAE/ /ALTERNATE FOR CD-365/	1	
	694-180690	. BOX ASSY,REAR RADIO JUNCTION	1	A
	694-180804	. BOX ASSY,REAR RADIO JUNCTION	1	B
- 14	AN3435-2-19	. . BLOCK ASSY	6	
- 15	AN3435-2-17	. . BLOCK ASSY	1	
- 16	AN3435-2-15	. . BLOCK ASSY	1	
		/ATTACHING PARTS/		
- 17	AN515-6-28	. . SCREW	2	
	AN961-6	. . WASHER	2	
	AN926A6B	. . WASHER	2	
	AN341-6	. . NUT	2	
		----*----		
- 18	AN3432-6-12	. . STUD	106	
	AN341-6	. . NUT	106	
- 19	AN3432-6-14	. . STUD	24	
- 20	AN340-6	. . NUT	24	
- 21	NO NUMBER	. . RELAY,/USAF TYPE SW-172A/	1	A
		/ATTACHING PARTS/		
	AN515-6-6	. . SCREW	4	
	AN960-6	. . WASHER	4	
	AN365-632	. . NUT	4	
		----*----		
- 22	225XAX215	. . RELAY,/78290/	1	A
	CX3554	. . RELAY,/78290/	1	B
		/ATTACHING PARTS/		
	AN515-6-8	. . SCREW	2	
	AN960-6	. . WASHER	2	
	AN365-632	. . NUT	2	
		----*----		
- 23	AN3433-2-6	. . BAR,BUS	1	
- 24	AN3433-2-3	. . BAR,BUS	1	
- 25	AN3433-2-2	. . BAR,BUS	7	
- 26	RC21AE102K	. . RESISTOR,/SPECIFICATION JAN-R-11/	1	
- 27	RC21AE511K	. . RESISTOR,/SPECIFICATION JAN-R-11/	1	
- 28	RC40BE470J	. . RESISTOR,/SPECIFICATION JAN-R-11/	1	
- 29	S17377	. . CAPACITOR,/56289/	1	
- 30	S17378	. . CAPACITOR,/56289/	1	

FIG. & INDEX NO.	PART NO.	DESCRIPTION 1 2 3 4 5 6 7	UNITS PER ASSY	USABLE ON CODE
97	694-180689	. LID ASSY,REAR RADIO JUNCTION BOX.	1	A
	694-180838	. LID ASSY,REAR RADIO JUNCTION BOX.	1	B
- 31	99899-1.070	. . STUD,/61864/.	4	
- 32	99785-2	. . PIN,/61864/	4	
- 33	694-180689-2	. . LID,REAR RADIO JUNCTION BOX	1	A
	694-180838-1	. . LID,REAR RADIO JUNCTION BOX	1	B
- 34	694-180049	. . PLACARD	1	
- 35	694-180063	. . PLACARD	1	
- 36	694-180009	. . PLACARD	1	A
	694-180040	. . PLACARD	1	B
- 37	694-180686	. BRACKET ASSY,OMNI BEARING INDICATOR MOUNTING. /ATTACHING PARTS/	1	
- 38	AN4-11A	. BOLT.	3	
	AN960-416	. WASHER.	3	
	AN365-428	. NUT	3	
		----*----		
	694-180869	. HARNESS ASSY,AM-152/A1C MIXER AMPLIFIER . . .	1	
- 39	AN3057-6	. . ADAPTER	2	
- 40	AN3106A-14S-2S	. . PLUG,ELECTRICAL	2	
	694-180667	. HARNESS ASSY,BC-453-A RECEIVER.	1	
- 41	PL-152-A	. . PLUG,ELECTRICAL /80063/	1	
	694-180752	. CABLE ASSY,BC-453-B RANGE ANTENNA	1	
- 42	M-359	. . ADAPTER,/80063/	1	
- 43	PL-259-A	. . PLUG,ELECTRICAL /80063/	1	
- 44	RC31AE105M	. . RESISTOR,/SPECIFICATION JAN-R-11/	1	
- 45	694-180905	. RECEIVER,/LESS DYNAMOTOR/ /GFAE/ /BC453-B/. .	1	
- 46	FT-231	. MOUNTING,RECEIVER /GFAE/.	1	
- 47	FT-233A	. RACK,RECEIVER /GFAE/. . . . . /ATTACHING PARTS/	1	
- 48	AN520-10-8	. SCREW	4	
	AN960-10	. WASHER.	4	
	AN365-1032	. NUT	4	
		----*----		
- 49	DM-32-A	. DYNAMOTOR,/GFAE/.	1	
- 50	694-180676	. SUPPORT,VHF RECEIVER. . . . . /ATTACHING PARTS/	1	
- 51	AN520-10-14	. SCREW	4	
	100696-D16-08-012	. SPACER.	4	
	AN960-10	. WASHER.	4	
	AN365-1032	. NUT	4	
		----*----		
- 52	694-180839	. SUPPORT ASSY,REAR JUNCTION BOX RADIO. . . . . /ATTACHING PARTS/	1	B
- 53	AN515-8-8	. SCREW	2	
	AN960-8	. WASHER.	2	
	AN365-832	. NUT	2	
		----*----		
	694-180710	. HARNESS ASSY,VHF NAVIGATION TEST EQUIPMENT. .	1	
- 54	AN3102A-22-4S	. . RECEPTACLE,ELECTRICAL . . . . . /ATTACHING PARTS/	1	
- 55	AN515-4RB	. . SCREW	4	
	AN960-4	. . WASHER.	4	
	AN365-440	. . NUT	4	
		----*----		
- 56	694-180012	. PLACARD	1	
	694-180725	. HARNESS ASSY,R-252/ARN-14,DY-66/ARN-14-ID-. . 251/ARN	1	
- 57	AN3106M-20-29S	. . PLUG,ELECTRICAL	1	
- 58	AN3057-6	. . ADAPTER	1	
- 59	AN3057-16	. . ADAPTER	1	
	694-180658	. HARNESS ASSY,C-1 AMPLIFIER POWER.	1	
- 60	AN3106A-14S-5S	. . PLUG,ELECTRICAL	1	
- 61	AN3057-6	. . ADAPTER	1	

FIG. & INDEX NO.	PART NO.	DESCRIPTION 1 2 3 4 5 6 7	UNITS PER ASSY	USABLE ON CODE
97	694-180708	. HARNESS ASSY,C-1 AMPLIFIER.	1	A
	694-180872	. HARNESS ASSY,C-1 AMPLIFIER.	1	B
- 62	AN3106B-20-27S	. . PLUG,ELECTRICAL	1	
- 63	AN3057-12	. . ADAPTER	1	
	694-180815	. HARNESS ASSY,R-122/ARN-12 BEACON RECEIVER	1	
- 64	AN3106B-18-9S	. . PLUG,ELECTRICAL	1	
- 65	AN3057-10	. . ADAPTER	1	
- 66	R-122/ARN-12	. RECEIVER,/GFAE/	1	
	R-122A/ARN-12	. RECEIVER,/ALTERNATE FOR R-122/ARN-12/ /GFAE/.	1	A
	BC-1333	. RECEIVER,/ALTERNATE FOR R-122/ARN-12/ /GFAE/.	1	
	BC-1033B	. RECEIVER,/ALTERNATE FOR BC-1333/ /GFAE/	1	B
- 67	MT-589/ARN-12	. MOUNTING,/GFAE/	1	
	FT-161*	. MOUNTING,/GFAE/ /ATTACHING PARTS/	1	
- 68	AN520-10-8	. SCREW	4	
	AN960-10	. WASHER.	4	
	AN365-632	. NUT	4	
		-----*-----		
	694-180824*	. CABLE ASSY,BC-1333 OR BC-1033 RECEIVER. ANTENNA ADAPTER	1	
	694-180814*	. HARNESS ASSY,BC-1333 OR BC-1033 RECEIVER. POWER ADAPTER /ATTACHING PARTS/	1	
- 69	AN520-10-8	. SCREW	4	
	AN960-10	. WASHER.	4	
	AN365-1032	. NUT	4	
		-----*-----		
- 70	AM-142-A1C	. AMPLIFIER,/GFAE/.	2	
- 71	MT-556/A1C	. MOUNTING,/GFAE/ /ATTACHING PARTS/	2	
- 72	AN515-8-8	. SCREW	4	
		-----*-----		
- 73	694-180873	. BRACKET ASSY,MIXER AMPLIFIER SUPPORT.	1	
- 74	T67ARC-3	. TRANSMITTER,/GFAE/.	1	
- 75	MT-238C/ARC-3	. MOUNTING,/GFAE/ /ATTACHING PARTS/	1	
- 76	AN520-10-8	. SCREW	4	
	AN960-10	. WASHER.	4	
	AN365-1032	. NUT	4	
		-----*-----		
- 77	R77A/ARC-3	. RECEIVER,/GFAE/	1	
- 78	MT-237C/ARC-3	. MOUNTING,/GFAE/ /ATTACHING PARTS/	1	
- 79	AN520-10-8	. SCREW	4	
	AN960-10	. WASHER.	4	
	AN365-1032	. NUT	4	
		-----*-----		
	694-180761	. CABLE ASSY,R-77/ARC-3 RECEIVER ANTENNA.	1	
- 80	PL-259-A	. . PLUG,ELECTRICAL /80063/	2	
- 81	M-359	. . ADAPTER,/80063/	2	
	694-180825	. CABLE ASSY,R-122/ARN-12 RECEIVER ANTENNA.	1	
- 82	694-180825-1	. . CABLE,COAXIAL	1	
- 83	PL-259A	. . PLUG,ELECTRICAL /80063/	1	
- 84	MC-277	. . COUPLING,/80063/.	1	
- 85	M-275	. . NUT,/80063/	1	
	694-180709	. HARNESS ASSY,MG-149F INVERTER	1	A
	694-180834	. HARNESS ASSY,MG-149F INVERTER	1	B
- 86	AN3108B-22-4S	. . PLUG,ELECTRICAL	1	
- 87	AN3057-12	. . ADAPTER	1	

*TO BE USED ONLY WHEN BC-1333 OR BD-1033 RECEIVERS ARE INSTALLED.

FIG. & INDEX NO.	PART NO.	DESCRIPTION 1 2 3 4 5 6 7	UNITS PER ASSY	USABLE ON CODE
97	694-180696	. HARNESS ASSY,824-180682 DYNAMOTOR . . . . . /ATTACHING PARTS/	1	
	AN515-8-8	. SCREW	4	
	AN960-8	. WASHER.	4	
	AN365-832	. NUT . . . . . ----*----	4	
	824-180682	. . DYNAMOTOR ASSY,UNIT	1	
- 88	824-180682-2	. . . DYNAMOTOR,UNIT /MAKE FR PE-86/ /GFAE/ . .	1	
- 89	694-180688	. PLATE ASSY,DYNAMOTOR REINFORCEMENT. . . . . /ATTACHING PARTS/	1	
- 90	AN507-632-14	. SCREW	2	
	AN960-6	. WASHER.	2	
	AN365-632	. NUT . . . . . ----*----	2	
- 91	MG-149F	. INVERTER,/GFAE/	1	
	MG-149H	. INVERTER,/ALTERNATE FOR MG-149F/ /GFAE/ . . . /ATTACHING PARTS/	1	
- 92	AN312A	. BOLT. . . . . ----*----	4	
- 93	8660	. BOND,/70903/. . . . . /ATTACHING PARTS/	2	
- 94	31903	. TERMINAL,/00779/. . . . . ----*----	2	
- 95	694-180895	. PLATE ASSY,RADIO COMPARTMENT INVERTER REINF . /ATTACHING PARTS/	1	
- 96	AN515-6-14	. SCREW	4	
	AN960-6	. WASHER.	4	
	AN365-632	. NUT . . . . . ----*----	4	
- 97	694-180893*	. PLATE ASSY.	1	
	694-180894**	. PLATE ASSY.	1	
	694-180697	. HARNESS ASSY,R-77A/ARC-3 RECEIVER	1	
- 98	PL-153-A	. . PLUG,ELECTRIC /80063/	2	
	694-180659	. HARNESS ASSY,J-68/ARC-3 JUNCTION BOX.	1	
- 99	U-16/U	. . PLUG,ELECTRICAL /80063/	1	
	694-180698	. HARNESS ASSY,T-67/ARC-3 TRANSMITTER	1	
-100	U-15/U	. . PLUG,ELECTRICAL /80063/	2	
-101	PL-151-A	. . PLUG,ELECTRICAL /80063/	1	
	694-180707	. HARNESS ASSY,J-68/ARC-3 POWER	1	
-102	PL-148-A	. . PLUG,ELECTRICAL /80063/	1	
-103	J68/ARC-3	. BOX,POWER JUNCTION /GFAE/	1	
-104	MT-236B/ARC-3	. MOUNTING,/GFAE/ . . . . . /ATTACHING PARTS/	1	
-105	AN3-12A	. BOLT. . . . . ----*----	4	
-106	694-180898	. PLATE ASSY. . . . . /ATTACHING PARTS/	1	
-107	AN507-632-14	. SCREW	4	
	AN960-6	. WASHER.	4	
	100696-D10-08-018	. SPACER.	4	
	AN365-632	. NUT . . . . . ----*----	4	
-108	DY-21/ARC-3	. DYNAMOTOR,/GFAE/.	1	
-109	DY-22/ARC-3	. DYNAMOTOR,/GFAE/.	1	
	694-180664	. HARNESS ASSY,BC-347 AMPLIFIER	1	
-110	694-180623	. . BOX ASSY,INTERPHONE AMPLIFIER	1	
-111	MC-215	. SHAFT,TUNING /GFAE/	1	
-112	MC-211-A	. COUPLING,/GFAE/	1	
-113	694-180799-1	. SHAFT ASSY,R-5/ARN-7 RECEIVER TUNING /GFAE/ .	1	A
-114	694-180799-3	. SHAFT ASSY,R-5/ARN-7 RECEIVER TUNING /GFAE/ .	1	B
-115	694-180799-5	. SHAFT ASSY,R-5/ARN-7 RECEIVER TUNING /GFAE/ .	1	B
-116	694-180799-7	. SHAFT ASSY,R-5/ARN-7 RECEIVER TUNING /GFAE/ .	1	B

*WHEN MG-149F INVERTER IS USED.
**WHEN MG-149H INVERTER IS USED.

FIG. & INDEX NO.	PART NO.	DESCRIPTION 1 2 3 4 5 6 7	UNITS PER ASSY	USABLE ON CODE
97 -117	MC-136	. COUPLING,/GFAE/	1	
-118	MC-203-A	. COUPLING,/GFAE/	1	B
		/ATTACHING PARTS/		
-119	AN515-8-8	. SCREW	4	
	AN960-8	. WASHER	4	
	AN365-832	. NUT	4	
		----*----		
	694-180661	. HARNESS ASSY,COCKPIT MARKER BEACON LIGHT	1	
-120	AN3157-4	. . LIGHT ASSY	1	
	694-180657	. HARNESS ASSY,ID-250/ARN	1	A
	694-180812	. HARNESS ASSY,ID-250/ARN	1	B
-121	AN3106M-22-14S	. . PLUG,ELECTRICAL	1	
	694-180782	. PANEL INSTL,RADIO EQUIPMENT CONTROL	1	A-1
		/SEE FIG. 98/		
	694-180808	. PANEL INSTL,RADIO EQUIPMENT CONTROL	1	B
		/SEE FIG. 98/		
	694-180782-1	. PANEL INSTL,RADIO EQUIPMENT CONTROL	1	A-2
		/SEE FIG. 98/		
-122	694-180715	. HANGER ASSY,HEADSET & HAND MICROPHONE	2	
		/ATTACHING PARTS/		
-123	AN526-632-14	. SCREW	2	
	AN365-632	. NUT	2	
		----*----		
-124	694-180056	. . PLACARD,HEADSET & HAND MICROPHONE HANGER	1	
-125	202841-320	. CONNECTOR ASSY,HEADSET	1	A-1
	202841-720	. CONNECTOR ASSY,HEADSET	2	B
-126	180634P	. HOLDER	1	A-1
	180634P	. HOLDER	3	B
		/ATTACHING PARTS/		
-127	AN515-8-8	. SCREW	2	
		----*----		
-128	HS-33A	. HEADSET,/GFAE/	3	A-1
	HS-33	. HEADSET,/GFAE/	5	B
	H-33A	. HEADSET,/GFAE/	2	A-2
-129	T-17	. MICROPHONE,/GFAE/	3	A-1
	T-17	. MICROPHONE,/GFAE/	5	B
	T-17	. MICROPHONE,/GFAE/	2	A-2
	694-180655	. HARNESS ASSY,BC-1366M CABIN JACKBOX UNIT	1	A-1
-130	694-180892	. . JACKBOX	1	A-1
	694-180651	. HARNESS ASSY,BC-1366M CABIN JACKBOX	1	A-1
	694-180852	. HARNESS ASSY,1ST NAVIGATORS BC-1366M JACKBOX	1	B
-131	694-180891	. . JACKBOX	1	B
-132	694-180016	. . PLACARD,1ST NAVIGATORS JACKBOX	1	B
	694-180843	. HARNESS ASSY,2ND NAVIGATORS BC-1366M JACKBOX	1	B
-133	694-180891	. . JACKBOX	1	B
-134	694-180021	. . PLACARD,2ND NAVIGATORS JACKBOX	1	B
	694-180844	. HARNESS ASSY,3RD NAVIGATORS BC-1366M JACKBOX	1	B
-135	694-180891	. . JACKBOX	1	B
-136	694-180029	. . PLACARD,3RD NAVIGATORS JACKBOX	1	B
	694-180678	. BOX ASSY,RADIO CIRCUIT BREAKER	1	
		/ATTACHING PARTS/		
-137	AN526-8R18	. SCREW	4	
-138	100696-D12-06-024	. SPACER	4	
	AN960-8	. WASHER	4	
	AN365-832	. NUT	4	
		----*----		
-139	694-180678-2	. . BOX,RADIO CIRCUIT BREAKER	2	
-140	694-180039	. . PLACARD,RADIO CIRCUIT BREAKER WIRING	1	
	694-180679	. LID ASSY,RADIO CIRCUIT BREAKER BOX	1	
		/ATTACHING PARTS/		
-141	AN515-8R6	. SCREW	4	
		----*----		
-142	694-180679-2	. . LID,RADIO CIRCUIT BREAKER BOX	1	

FIG. & INDEX NO.	PART NO.	DESCRIPTION 1 2 3 4 5 6 7	UNITS PER ASSY	USABLE ON CODE
97 -143	49B6768-5	. . BREAKER,CIRCUIT /GFAE/.	5	
-144	49B6768-10	. . BREAKER,CIRCUIT /GFAE/.	1	
-145	49B6768-20	. . BREAKER,CIRCUIT /GFAE/.	1	
-146	49B6768-35	. . BREAKER,CIRCUIT /GFAE/.	1	
-147	694-180680	. . BAR,BUS	1	
-148	694-180035	. . PLACARD,RADIO CIRCUIT BREAKER BOX	1	
-149	694-180063	. . PLACARD,JUNCTION.	1	
	694-180656	. HARNESS ASSY,I-8A INDICATOR ADAPTER	1	
-150	PL-118	. . PLUG,ELECTRICAL /80063/	1	
-151	AN3101M-22-14P	. . RECEPTACLE,ELECTRICAL	1	
	694-180647	. HARNESS ASSY,AN/ARC-3 AUDIO	1	
-152	694-180711	. HARNESS ASSY,COMPASS JUNCTION BOX	1	
	694-180704	. HARNESS ASSY,AC POWER	1	A
	694-180845	. HARNESS ASSY,AC POWER	1	B
-153	694-180779	. . BOX ASSY,AC POWER	1	
-154	694-180778	. . LID ASSY,AC POWER	1	A-1
	694-180867	. . LID ASSY,AC POWER	1	B
-155	49A6549-1-2	. . FUSE.	5	
	49A6549-1-3	. . FUSE.	4	
	694-180810	. HARNESS ASSY,C-4/ARN-7 CONTROL BOX.	1	B
-156	AN3106B-24-28S	. . RECEPTACLE,ELECTRICAL	1	B
-157	AN3057-16	. . ADAPTER,ELECTRICAL.	1	B
-158	FT-224-A	. . MOUNTING,/GFAE/	1	B
	694-180653	. HARNESS ASSY,BC-453-B & BC-347-C AUDIO. . . .	1	
	694-180622	. HARNESS ASSY,AN/ARN-14 & MARKER AUDIO WIRES .	1	
-159	AN3106B-24-28SW	. . PLUG,ELECTRICAL	1	
-160	AN3057-16	. . CLAMP	1	
	694-180619	. HARNESS ASSY,AN/ARN-7 RADIO COMPASS AUDIO . .	1	A
	694-180847	. HARNESS ASSY,AN/ARN-7 RADIO COMPASS AUDIO . .	1	B
	694-180760	. CABLE ASSY,AT-172/ARN-14 ANTENNA.	1	
-161	694-180760-2	. . CABLE,COAXIAL	1	
-162	UG-21C-U	. . PLUG,/ARMY NAVY TYPE NUMBER/.	2	
-163	UG-27B/U	. . ADAPTER,/ARMY NAVY TYPE NUMBER/	2	
	694-180654	. HARNESS ASSY,AM-142/A1C INTERPHONE AMPLIFIER.	1	
	694-180876	. HARNESS ASSY,ID-249/ARN COURSE INDICATOR. . .	1	
-164	AN3106M-28-12S	. . PLUG,ELECTRICAL	1	
	694-180620	. HARNESS ASSY,J-68/ARC-3 CABIN	1	
	694-180621	. HARNESS ASSY,C-512A/ARN-14 CONTROL PANEL. . .	1	
-165	AN3106B-24-28S	. . PLUG,ELECTRICAL	1	
-166	AN3057-16	. . CLAMP	1	
	694-180695	. HARNESS ASSY,BC-453-A & MARKER LIGHT. . . .	1	
	694-180618	. HARNESS ASSY,AN/ARN-7 RADIO COMPASS CABIN . .	1	A
	694-180809	. HARNESS ASSY,NAVIGATORS INDICATOR I-82-A. . .	1	B
-167	PL-118	. . PLUG,ELECTRICAL /80063/	1	B
	694-180826	. HARNESS ASSY,C-411/A CONTROL PANEL CABIN. . .	1	B
	694-180870	. BOX ASSY,RADIO COMPASS RELAY.	1	B
-168	694-180870-1	. . BOX,RADIO COMPASS RELAY	1	B
	694-180871	. LID ASSY,RADIO COMPASS RELAY BOX.	1	B
-169	694-180871-1	. . LID,RADIO COMPASS RELAY BOX.	1	B
-170	694-180030	. . PLACARD,RELAY BOX COMPASS	1	B
-171	694-180063	. . PLACARD,JUNCTION BOX WARNING.	1	B
-172	BK-22-K	. RELAY,/GFAE/.	1	B
		/ATTACHING PARTS/		
	AN526-832-8	. SCREW	4	
	AN526-832-9	. SCREW	2	
	AN960-8	. WASHER.	6	
	AN365-832	. NUT	6	
		----*----		
	694-180811	. HARNESS ASSY,C-4/ARN-7 TO BK-22-K	1	B
-173	AN3102-24-28P	. . RECEPTACLE,ELECTRICAL	1	B
	694-180706	. HARNESS ASSY,RADIO PRIMARY POWER.	1	A
	694-180840	. HARNESS ASSY,RADIO PRIMARY POWER.	1	B
-174	AN749-1-3	. JUMPER,BONDING.	10	
-175	AN742D7	. CLAMP,JUMPER.	5	
-176	AN742D5	. CLAMP,JUMPER.	5	
-177	AN526-632-7	. SCREW	20	
	AN960-6	. WASHER.	20	

FIG. & INDEX NO.	PART NO.	DESCRIPTION 1 2 3 4 5 6 7	UNITS PER ASSY	USABLE ON CODE
97	AN365-632	. NUT	20	
-178	NO NUMBER	. LOOP,DEHYDRATOR /GFAE/. . . . . /ATTACHING PARTS/	1	
-179	AN515-6-6	. SCREW	4	
	AN365-632	. NUT	4	
		----*----		
-180	NO NUMBER	. HOSE,DEHYDRATOR /GFAE/. . . . . /ATTACHING PARTS/	1	
-181	NO NUMBER	. CLAMP,9/16 HOSE /GFAE/.	2	
		----*----		
	694-180646	. HARNESS ASSY,LP-21/LM LOOP.	1	A
	694-180853	. HARNESS ASSY,LP-21/LM LOOP.	1	B
-182	PL-112	. . PLUG,ELECTRICAL /80063/	1	
-183	LP-21-LM	. LOOP,/GFAE/ . . . . . /ATTACHING PARTS/	1	
-184	NO NUMBER	. SCREW,832 X 7/8 MACHINE /70276/	7	
		----*----		
-185	814-180674	. SEAL ASSY,LOOP.	1	A-1
	814-180677-1	. SEAL ASSY,LOOP.	1	B
-186	694-180763	. CABLE ASSY,T-67/ARC-3 ANTENNA TRANSMITTER . .	1	
-187	694-180089	- . PLACARD,R-89B/ARN-5A RADIO RECEIVER . . . . . /ATTACHING PARTS/	1	A-1,B
-188	AN530-4-4	. SCREW	4	
		----*----		
	694-180671	. ANTENNA INSTL,RADIO	1	
	694-180671-2	. . ANTENNA ASSY,ADF SENSE.	1	
-189	MX-273/AR	. . . INSULATOR,/83044/	1	
-190	IL-5U	. . . INSULATOR,/83044/	1	
-191	MX-656/AR	. . . SHACKLE,/83044/	1	
-192	694-180671-16	. . . SHACKLE,/MAKE FR AN115-21/.	1	
-193	AN393-19	. . . PIN	2	
	AN380-2-2	. . . PIN,COTTER.	2	
-194	MX-276/AR	. . SHIELD,CORONA /83044/	1	
-195	CU-65/ARN-6	. . COUPLING,UNIT . . . . . /ATTACHING PARTS/	2	
-196	AN515-6-13	. . SCREW	4	
	AN960-6	. . WASHER.	4	
	AN365-632	. . NUT	4	
		----*----		
-197	84-180805	. . MAST ASSY,RADIO ANTENNA . . . . . /ATTACHING PARTS/	1	
-198	AN526-832-7	. . SCREW	4	
	AN960-8	. . WASHER.	4	
	AN365-832	. . NUT	4	
		----*----		
-199	111513-02003	. . CABLE ASSY.	1	
-200	834-180458	. . SEAL,ANTENNA MAST	1	
-201	804-180459	. . SEAL,RADIO ANTENNA ANCHOR	1	
-202	180806P	. . PLATE,ANCHOR. . . . . /ATTACHING PARTS/	1	
-203	AN526-832-9	. . SCREW	2	
	AN960-8	. . WASHER.	2	
	AN365-832	. . NUT	2	
		----*----		
-204	AN104B	. . MAST,ANTENNA.	1	
-205	694-180672	. . GASKET,AN104B ANTENNA MAST.	1	
-206	694-180673	. . PLATE,AN104B ANTENNA MAST . . . . . /ATTACHING PARTS/	1	
-207	AN526-632-10	. . SCREW	8	
	AN960-8	. . WASHER.	8	
	AN365-632	. . NUT	8	
		----*----		

FIG. & INDEX NO.	PART NO.	DESCRIPTION 1 2 3 4 5 6 7	UNITS PER ASSY	USABLE ON CODE
97 -208	694-180674	. . CLAMP,AN104B ANTENNA MAST /ATTACHING PARTS/	2	
-209	AN526-632-12	. . SCREW	4	
-210	AN526-632-16	. . SCREW	4	
-211	AN526-832-36	. . SCREW	2	
	AN960-6	. . WASHER,/TO BE USED AS SPACERS/	32	
	AN960-8	. . WASHER	4	
	AN365-632	. . NUT	4	
	AN365-832	. . NUT	2	
-212	407-184737	. . MAST ASSY,ANTENNA /ATTACHING PARTS/	2	
-213	AN526-832R7	. . SCREW	4	
	694-180671-4	. . ANTENNA ASSY,RANGE	1	
	694-180671-6	. . ANTENNA ASSY,MARKER BEACON	1	
-214	MX-273/AR	. . . INSULATOR,STRAIN /83044/	4	
-215	MX-656/AR	. . . SHACKLE,/83044/	2	
-216	AN390-19	. . . PIN	2	
	AN380-2-1	. . . PIN,COTTER	2	
-217	AN115-16	. . . SHACKLE	2	
-218	AN23-8A	. . . BOLT,CLEVIS	4	
	AN364-1032	. . . NUT	4	
-219	MX-276/AR	. . . SHIELD,CORONA /83044/	2	
-220	IL-5/U	. . . INSULATOR,/83044/	2	
-221	CU-65/ARN-6	. . COUPLING,UNIT	2	
-222	437-184738	. . MAST ASSY /ATTACHING PARTS/	2	
-223	AN526-832R7	. . SCREW	3	
	AN526-832R8	. . SCREW	1	

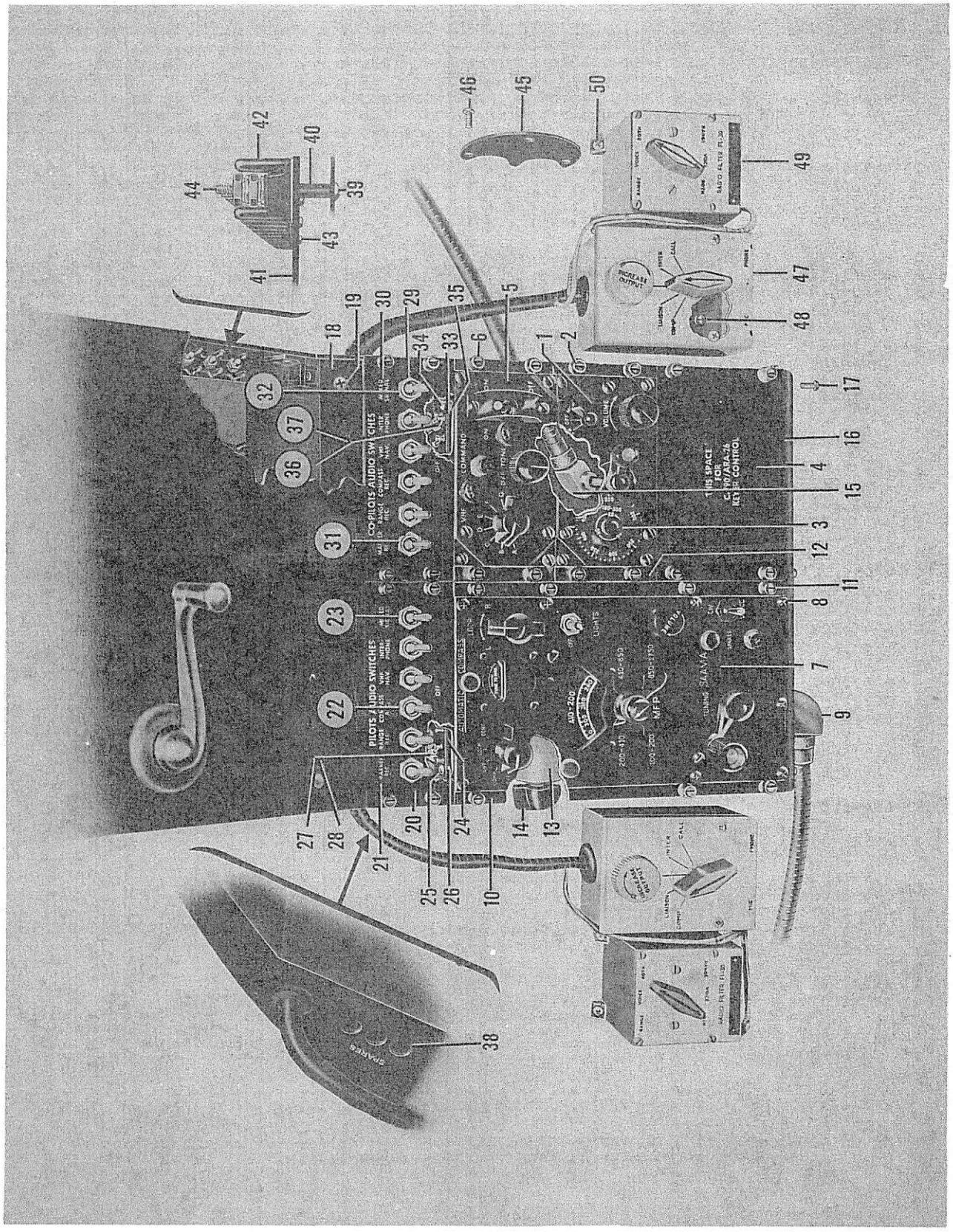

Figure 98. Radio Equipment Control Panel Installation

FIG. & INDEX NO.	PART NO.	DESCRIPTION 1 2 3 4 5 6 7	UNITS PER ASSY	USABLE ON CODE
98	694-180782	PANEL INSTL,RADIO EQUIPMENT CONTROL . . . . . /SEE FIG. 97 FOR NHA/	REF	A-1
	694-180808	PANEL INSTL,RADIO EQUIPMENT CONTROL . . . . . /SEE FIG. 97 FOR NHA/	REF	B
	694-180782-1	PANEL INSTL,RADIO EQUIPMENT CONTROL . . . . . /SEE FIG. 97 FOR NHA/	REF	A-2
- 1	C-570A/A	. PANEL,CONTROL /GFAE/. . . . . /ATTACHING PARTS/	1	
- 2	AN515-8-6	. SCREW	4	
	AN960A8L	. WASHER.	4	
	AN936A8	. WASHER.	4	
	AN340-8	. NUT	4	
- 3	MX-1089U	. DIAL,/190-550KC/ /GFAE/	1	
- 4	694-180797	. PLATE ASSY,RADIO CONTROL PANEL COVER. . . .	1	
- 5	C-404A/A	. PANEL,CONTROL /GFAE/.	1	
	C-404/A	. PANEL,CONTROL /GFAE/ /ALTERNATE FOR C404A/A/. /ATTACHING PARTS/	1	A-1
- 6	AN515-8-6	. SCREW	4	
	AN960A8L	. WASHER.	4	
	AN936A8	. WASHER.	4	
	AN340-8	. NUT	4	
- 7	C-411/A	. PANEL,CONTROL . . . . . /ATTACHING PARTS/	1	
- 8	AN515-8-6	. SCREW	4	
	AN515-8-9	. SCREW	4	
	AN960A8L	. WASHER.	8	
	AN936A8	. WASHER.	8	
	AN340-8	. NUT	8	
- 9	MC-136	. ADAPTER,/GFAE/.	1	
- 10	694-180774	. PLATE ASSY,COMPASS CONTROL PANEL ADAPTER LH .	1	
- 11	694-180774-1	. PLATE ASSY,COMPASS CONTROL PANEL ADAPTER RH .	1	
- 12	694-180775	. PLATE ASSY,CONTROL PANEL ADAPTER.	4	
	694-180666	. HARNESS ASSY,RADIO PANEL LIGHT RHEOSTAT . . .	1	
- 13	0157	. . RHEOSTAT,/TYPE 352/ /44655/	1	
- 14	AN3220-2	. KNOB,RADIO PANEL LIGHTS RHEOSTAT.	1	
- 15	MC-211-A	. COUPLING,/GFAE/	1	
- 16	694-180787	. COVER,RADIO CONTROL PANEL FWD . . . . . /ATTACHING PARTS/	1	
- 17	AN515-8R8	. SCREW	6	
	AN960-8	. WASHER.	6	
- 18	694-180793	. STRAP,RADIO CONTROL PANEL SPACER. . . . . /ATTACHING PARTS/	1	
- 19	AN515-8R10	. SCREW	3	
	694-180662-1	. HARNESS ASSY,PILOTS MIXER PANEL	1	A-2
	694-180662	. HARNESS ASSY,PILOTS MIXER PANEL	1	A-1,B
	694-180790	. . PANEL ASSY,PILOTS AUDIO MIXER	1	
- 20	694-180789	. . . PANEL ASSY,AUDIO SWITCH	1	
- 21	694-180059	. . . PLACARD,PILOTS AUDIO SWITCH	1	
- 22	AN3021-2	. . . SWITCH.	5	
- 23	AN3021-3	. . . SWITCH.	1	
- 24	694-180792	. . . BOARD ASSY,RESISTOR TERMINAL. . . . . /ATTACHING PARTS/	1	
- 25	AN515-8R10	. . . SCREW	2	
- 26	100696-S08-06-004	. . . SPACER.	2	
	AN960-8	. . . WASHER.	2	
	AN365-832	. . . NUT	2	
- 27	RC-20-AE-822-J	. . . RESISTOR,/SPECIFICATION JAN-R-11/	6	
- 28	RC-20-AE-122-J	. . . RESISTOR,/SPECIFICATION JAN-R-11/	6	

FIG. & INDEX NO.	PART NO.	DESCRIPTION 1 2 3 4 5 6 7	UNITS PER ASSY	USABLE ON CODE
98	694-180663-1	. HARNESS ASSY,COPILOTS MIXER PANEL	1	A-2
	694-180663	. HARNESS ASSY,COPILOTS MIXER PANEL	1	A-1,B
	694-180791	. . PANEL ASSY,COPILOTS AUDIO MIXER	1	
- 29	694-180789	. . . PANEL ASSY,AUDIO SWITCH	1	
- 30	694-180060	. . . PLACARD,COPILOTS AUDIO SWITCH	1	
- 31	AN3021-2	. . . SWITCH	5	
- 32	AN3021-3	. . . SWITCH	1	
- 33	694-180792	. . . BOARD ASSY,RESISTOR TERMINAL /ATTACHING PARTS/	1	
- 34	AN515-8R10	. . . SCREW	2	
- 35	100696-S08-06-004	. . . SPACER	2	
	AN960-8	. . . WASHER	2	
	AN365-832	. . . NUT	2	
		----*----		
- 36	RC-20-AE-822-J	. . . RESISTOR,/SPECIFICATION JAN-R-11/	6	
- 37	RC-20-AE-122-J	. . . RESISTOR,/SPECIFICATION JAN-R-11/	6	
- 38	AN3136-323	. LAMP,SPARES	3	
	694-180795	. PLATE ASSY,RADIO TERMINAL BOX /ATTACHING PARTS/	1	
- 39	AN526-632-22	. SCREW	1	
	AN526-632-24	. SCREW	1	
	AN526-632-26	. SCREW	1	
	AN526-632-28	. SCREW	1	
- 40	100696-S08-05-009	. SPACER	1	
	100696-S08-05-014	. SPACER	1	
	100696-S08-05-019	. SPACER	1	
	100696-S08-05-024	. SPACER	1	
	AN960-6	. WASHER	8	
	AN936A6	. WASHER	8	
	AN340-6	. NUT	8	
		----*----		
- 41	694-180795-2	. . PLATE,RADIO TERMINAL BOX	1	
- 42	AN3435-2-20	. . BLOCK,TERMINAL /ATTACHING PARTS/	4	
- 43	AN515-4-5	. . SCREW	3	
	AN960-4	. . WASHER	3	
	AN340-4	. . NUT	3	
		----*----		
- 44	AN3432-6-12	. . STUD	75	
	AN936A6B	. . WASHER	75	
	AN961-6	. . WASHER	75	
	AN341-6	. . NUT	75	
- 45	694-180788	. LID ASSY,FUSE BOX /ATTACHING PARTS/	1	
- 46	AN526-632R9	. SCREW	3	
		----*----		
	694-180682	. EQUIPMENT INSTL,PILOTS INTERPHONE	1	
	694-180648	. . HARNESS ASSY,BC-1366M PILOTS JACKBOX LH	1	
	694-180649	. . HARNESS ASSY,BC-1366M COPILOTS JACKBOX RH	1	
- 47	694-180684	. . . BOX,PILOTS & COPILOTS INTERPHONE JACK	1	A-28,B
	694-180890	. . . BOX,PILOTS & COPILOTS INTERPHONE JACK /ATTACHING PARTS/	1	A-29
- 48	AN507-832-8	. . . SCREW	4	
	AN960-10	. . . WASHER	8	
		----*----		
- 49	FL-30	. . . FILTER,/SPECIFICATION 71-1187/ /ATTACHING PARTS/	1	
- 50	AN515-8-9	. . . SCREW	4	
		----*----		
	NO NUMBER	. . . JACK,/TYPE JJ-026/ /SPECIFICATION JAN-6-641/	1	

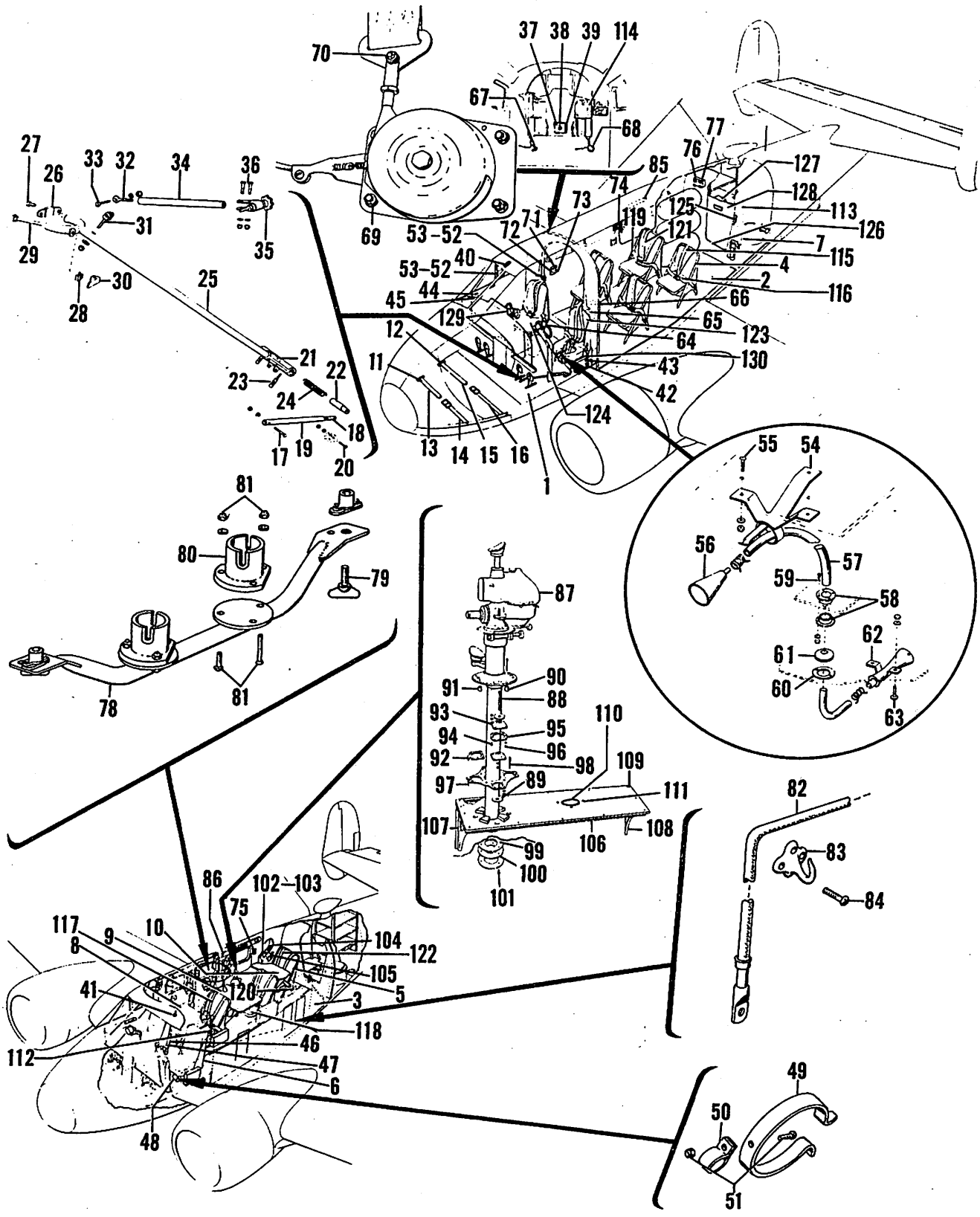

Figure 99. Furnishings Installation

C45H-4-99

FIG. & INDEX NO.	PART NO.	DESCRIPTION 1 2 3 4 5 6 7	UNITS PER ASSY	USABLE ON CODE
99	694-180630	FURNISHINGS INSTL,/SEE FIG. 1 FOR NHA/	1	A
	694-180640	FURNISHINGS INSTL,/SEE FIG. 1 FOR NHA/	1	B
- 1	694-183120	. FLOORBOARD INSTL,PILOTS /SEE FIG. 100/	1	
- 2	694-183100	. FLOOR INSTL,CABIN /SEE FIG. 101/	1	A
- 3	694-183101	. FLOOR INSTL,CABIN /SEE FIG. 101/	1	B
- 4	734-183302	. SEAT ASSY,HIGH STRENGTH /SEE FIG. 102/	4	A
- 5	734-183302	. SEAT ASSY,HIGH STRENGTH /SEE FIG. 105/	1	B
- 6	734-183297	. SEAT ASSY,PILOTS LH /SEE FIG. 103/	1	
	734-183297-1	. SEAT ASSY,PILOTS RH /SEE FIG. 103/	1	
- 7	634-183200	. COMPARTMENT INSTL,LAVATORY /SEE FIG. 104/	1	A
	634-183202	. COMPARTMENT INSTL,LAVATORY /SEE FIG. 104/	1	B
- 8	634-183460	. TABLE INSTL,1ST NAVIGATORS /SEE FIG. 105/	1	B
- 9	634-183461	. TABLE ASSY,2ND NAVIGATORS /SEE FIG. 105/	1	B
- 10	634-183462	. TABLE ASSY,3RD NAVIGATORS /SEE FIG. 105/	1	B
	404-180643	. STRAP INSTL,NOSE BAGGAGE RETAINER	1	
- 11	6411B	. . LOOP,FOOTMAN /19220/	4	
		/ATTACHING PARTS/		
- 12	AN505-8-10	. . SCREW	2	
		----*----		
- 13	111191-024-08	. . STRAP ASSY,FWD	1	
- 14	111192-024-08	. . STRAP ASSY,FWD	1	
- 15	111191-030-08	. . STRAP ASSY,REAR	1	
- 16	111192-030-08	. . STRAP ASSY,REAR	1	
	694-187050	. LOCK ASSY,CONTROL	1	
		/ATTACHING PARTS/		
- 17	AN3-7A	. BOLT	1	
	AN960-10	. WASHER	1	
	AN365-1032	. NUT	1	
		----*----		
- 18	187054	. . SCREW,CONTROL LOCK ADJUSTING	1	
- 19	404-187053	. . TUBE,CONTROL LOCK ADJUSTING	1	
		/ATTACHING PARTS/		
- 20	AN3-12A	. . BOLT	1	
	AN960-10	. . WASHER	1	
	AN365-1032	. . NUT	1	
		----*----		
- 21	694-187055	. . LOCK ASSY,RUDDER PEDAL SAFETY	1	
- 22	404-187052	. . PLUNGER,CONTROL PEDAL LOCKING	2	
- 23	107496	. . SCREW,KNURLED ADJUSTING	2	
- 24	100943-032-014-200-6	. . SPRING	1	
- 25	694-187052	. . FORK ASSY,CONTROL LOCK	1	
- 26	694-187059	. . LATCH ASSY,CONTROL LOCK	1	
		/ATTACHING PARTS/		
- 27	AN3-4A	. . BOLT	1	
		----*----		
- 28	694-187061	. . NUT ASSY,CONTROL LOCK	1	
		/ATTACHING PARTS/		
- 29	694-187063	. . BOLT,CONTROL LOCK	1	
		----*----		
- 30	694-187062	. . SNAP,CONTROL	1	
- 31	694-187064	. . CLEVIS	1	
		/ATTACHING PARTS/		
	AN960-416	. . WASHER	1	
	AN364-428	. . NUT	1	
		----*----		
- 32	HM-4	. . END,ROD /73134/	1	
		/ATTACHING PARTS/		
- 33	AN4-7A	. . BOLT	1	
	AN960-416	. . WASHER	1	
	AN365-428	. . NUT	1	
		----*----		
- 34	694-187065	. . TUBE ASSY,CONTROL LOCK	1	

FIG. & INDEX NO.	PART NO.	DESCRIPTION 1 2 3 4 5 6 7	UNITS PER ASSY	USABLE ON CODE
99 - 35	694-187051	. . LOCK ASSY,CONTROL WHEEL . . . . . /ATTACHING PARTS/	1	
- 36	AN4-12A	. . BOLT.	2	
	AN960-416	. . WASHER.	4	
	AN365-428	. . NUT	2	
		----*----		
	CL01-90CDB-1	. LIST,PILOTS AMPLIFIER CHECK /GFAE/.	1	A-1
	694-180081	. LIST,PILOTS CHECK OFF	1	B
	CL01-90CDC-1	. LIST,PILOTS AMPLIFIER CHECK /GFAE/.	1	A-2
- 37	39D3922	. HOLDER,PILOTS CHECK OFF LIST.	1	
- 38	694-180082	. PLACARD,PILOTS CHECK LIST . . . . . /ATTACHING PARTS/	2	
- 39	AN530-6R10	. SCREW	4	
		----*----		
- 40	111745	. PLACARD,MODEL	1	
- 41	NO NUMBER	. THERMOMETER,/TYPE C-13B/. . . . . /SPECIFICATION 94-2732B/	1	
- 42	84-183520	. CASE,MAP. . . . . /ATTACHING PARTS/	1	
- 43	AN526-832-16	. SCREW	4	
		----*----		
- 44	L1148	. TRAY,PILOTS COMPARTMENT ASH /72882/ . . . . . /ATTACHING PARTS/	2	
- 45	AN526-632R6	. SCREW	4	
	AN365-632	. NUT	4	
		----*----		
- 46	0161366	. HOLDER,AIRPLANE FLIGHT REPORT /TYPE A-2/. . . /ATTACHING PARTS/	1	
- 47	AN526-632-20	. SCREW	3	
	100696-D08-05-008	. SPACER.	3	
	AN960-6	. WASHER.	3	
	AN365-632	. NUT	3	
		----*----		
	115043	. CONTAINER,/SEE FIG. 102/.	6	A
- 48	8700-222400	. CUP,SANITARY /USAF P/N/ /SEE FIG. 102/. . . .	5	B
- 49	183364	. CLAMP,PILOTS & COPILOTS SANITARY CONTAINER. .	2	
- 50	AN742-8	. CLAMP,PILOTS & COPILOTS . . . . . /ATTACHING PARTS/	2	
- 51	AN520-10-6	. SCREW	1	
	AN365-1032	. NUT	1	
		----*----		
	183364	. CLAMP,SANITARY CONTAINER /SEE FIG. 102/ . . .	4	A
	183364	. CLAMP,SANITARY CONTAINER /SEE FIG. 102/ . . . /ATTACHING PARTS/	3	B
	AN515-8-6	. SCREW	2	
	AN365-832	. NUT	2	
		----*----		
- 52	814-180029	. PLACARD,LOAD ADJUSTER . . . . . /ATTACHING PARTS/	1	B
- 53	AN535-4-2	. SCREW	2	
		----*----		
	694-180632	. TUBE INSTL,PILOTS RELIEF.	1	
- 54	33B4741	. . BRACKET . . . . . /ATTACHING PARTS/	1	
- 55	AN526-632-9	. . SCREW	3	
	AN960-6	. . WASHER.	6	
	AN365-632	. . NUT	3	
		----*----		
- 56	42A6504	. . HORN,RELIEF TUBE.	1	
- 57	694-180632-2	. . TUBE,RELIEF	1	
- 58	180654D	. . GROMMET . . . . . /ATTACHING PARTS/	2	
- 59	AN515-6-14	. . SCREW	4	
	AN960-6	. . WASHER.	4	
	AN365-632	. . NUT	4	
		----*----		

FIG. & INDEX NO.	PART NO.	DESCRIPTION 1 2 3 4 5 6 7	UNITS PER ASSY	USABLE ON CODE
99 - 60	180648P	. . PLATE	1	
- 61	AN931-10-14	. . GROMMET	1	
- 62	41A9177	. . VENTURI,RELIEF TUBE	1	
		/ATTACHING PARTS/		
- 63	AN526-632-9	. . SCREW	2	
	AN960-6	. . WASHER	2	
	AN365-632	. . NUT	2	
		----*----		
	734-182353	. LUG INSTL,SAFETY BELT LH	1	
	734-182353-1	. LUG INSTL,SAFETY BELT RH	1	
- 64	734-182353-16	. . LUG ASSY,SAFETY BELT LH	1	
	734-182353-17	. . LUG ASSY,SAFETY BELT RH	1	
	694-180066	. PLACARD,FUEL SYSTEM	1	
- 65	13X-13261	. EXTINGUISHER,FIRE /TYPE A-20/ /02413/	1	
		/ATTACHING PARTS/		
- 66	AN515-8R10	. SCREW	4	
	AN960-8	. WASHER	4	
	AN365-832	. NUT	4	
		----*----		
	734-183298-52	. PROVISIONS INSTL,SHOULDER HARNESS LH	1	
	734-183298-53	. PROVISIONS INSTL,SHOULDER HARNESS RH	1	
- 67	734-183298-48	. . REEL ASSY,INERTIA /LH ONLY/	1	
		/MAKE FR /02860/ 0-4600-853/		
- 68	734-183298-50	. . REEL ASSY,INERTIA /RH ONLY/	1	
		/MAKE FR /02860/ 0-4600-853/		
		/ATTACHING PARTS/		
- 69	AN509-10-11	. . SCREW	4	
- 70	AN23-11A	. . BOLT	1	
	AN960-10	. . WASHER	4	
	AN364-1032	. . NUT	1	
	AN365-1032	. . NUT	4	
		----*----		
	AN931-4-12	. . GROMMET	1	
- 71	L1148	. TRAY,ASH /72882/	4	
- 72	183731	. COVER,ASH TRAY	4	A
		/ATTACHING PARTS/		
- 73	AN526-632R6	. SCREW	2	
	AN365-632	. NUT	2	
		----*----		
- 74	694-180057	. PLACARD,EMERGENCY EXIT RELEASE	1	A
- 75	694-180069	. PLACARD,CABIN DOOR EMERGENCY RELEASE	1	
	794-180691	. KIT INSTL,FIRST AID	1	
- 76	794-180691-2	. . KIT,FIRST AID /MAKE FR /GFAE/ 9-196-650/	2	
		/ATTACHING PARTS/		
- 77	AN227-22	. . STUD	4	
	105090-A-032-2-100	. . WASHER	4	
	AN364-832	. . NUT	4	
		----*----		
	694-184812	. SUPPORT ASSY,ASTRO COMPASS	1	B
- 78	694-184813	. . BEAM ASSY	1	B
		/ATTACHING PARTS/		
- 79	814-184817	. . SCREW ASSY	2	
	AN960-616	. . WASHER	2	
		----*----		
- 80	AN5738-2	. . COMPASS,ASTRO STANDARD	2	B
		/ATTACHING PARTS/		
- 81	AN3-6A	. . BOLT	2	
	AN365-1032	. . NUT	3	
	AN960-10	. . WASHER	3	
	AN507-1032-28	. . SCREW	1	
		----*----		
- 82	734-183068	. CORD ASSY,PARACHUTE STOWAGE	3	B
- 83	93	. HOOK,ALUMINUM /71694/	6	B
		/ATTACHING PARTS/		
- 84	AN526-832R9	. SCREW	3	
		----*----		

FIG. & INDEX NO.	PART NO.	DESCRIPTION 1 2 3 4 5 6 7	UNITS PER ASSY	USABLE ON CODE
99 - 85	694-180032	. PLACARD,EMERGENCY EXIT.	1	
- 86	694-183601	. PANEL INSTL,2ND NAVIGATORS INSTRUMENTATION. . /SEE FIG. 106/	1	B
	644-183275	. DRIFTMETER INSTL,B-3.	1	B
- 87	AN5763-27	. . DRIFTMETER,B-3. . . . . /ATTACHING PARTS/	1	B
- 88	AN515B8-22	. . SCREW	8	
	AN960B8	. . WASHER.	8	
	AN365B832	. . NUT	8	
- 89	100951-L064-008-112	. . WASHER.	8	
- 90	84-183276	. . SPACER.	4	
- 91	84-183277	. . SPACER. . . . . ----*----	4	
- 92	84-183279	. . PLATE	2	B
- 93	AN8008D8	. . INSULATOR,VIBRATION . . . . . /ATTACHING PARTS/	8	B
- 94	AN515B8-10	. . SCREW	1	
	AN960B8	. . WASHER.	1	
	AN365B832	. . NUT . . . . . ----*----	1	
- 95	183123P	. . PLATE,DRIFTMETER SPACER . . . . . /ATTACHING PARTS/	4	B
- 96	AN515B8-7	. . SCREW	2	
	AN960B8	. . WASHER.	2	
	AN365B832	. . NUT . . . . . ----*----	2	
- 97	84-183278	. . PLATE,DRIFTMETER ANTI-VIBRATION MOUNT . . . /ATTACHING PARTS/	1	B
- 98	AN520B416-24	. . SCREW	4	
	AN960B416	. . WASHER.	4	
	AN365B428	. . NUT . . . . . ----*----	4	
- 99	84-183128	. . WASHER.	2	
-100	84-183130	. . CAP,DRIFTMETER RETAINING. . . . . /ATTACHING PARTS/	1	B
-101	AN526-832-10	. . SCREW	3	
	84-183128	. . WASHER. . . . . ----*----	2	
-102	644-183161	. MOUNT ASSY,B-5 DRIFTMETER . . . . . /ATTACHING PARTS/	1	B
-103	AN515-4-6	. SCREW	1	
	AN960-4	. WASHER.	5	
	AN365-440	. NUT	5	
	AN526-8R7	. SCREW . . . . . ----*----	6	
-104	NO NUMBER	. DRIFTMETER,B-5 /GFAE/	1	B
-105	664-183165	. COVER ASSY,DRIFTMETER CUTOUT.	1	B
	664-180460	. SHELF INSTL,NAVIGATORS EQUIPMENT.	1	B
-106	664-180457	. . TOP ASSY,EQUIPMENT SHELF.	1	B
-107	644-180442	. . SUPPORT,STOWAGE SHELF FWD	1	B
-108	694-180456	. . SUPPORT,STOWAGE SHELF AFT . . . . . /ATTACHING PARTS/	1	B
-109	AN526-832R18	. . SCREW	10	
	AN526-832R8	. . SCREW	3	
	AN365-832	. . NUT	10	
	AN960-8L	. . WASHER. . . . . ----*----	10	
-110	AN5737-1	. COMPASS,/GFAE/. . . . . /ATTACHING PARTS/	1	B
-111	AN515B8-18	. SCREW	3	
	AN960B8	. WASHER.	6	
	AN365B832	. NUT . . . . . ----*----	3	

FIG. & INDEX NO.	PART NO.	DESCRIPTION 1 2 3 4 5 6 7	UNITS PER ASSY	USABLE ON CODE
99 -112	694-183600	• PANEL INSTL,1ST NAVIGATOR FLOATING INSTRUMENT /SEE FIG. 106/	1	B
-113	184820	• DOOR ASSY,BULKHEAD COMPLETE /SEE FIG. 104/. •	1	
-114	734-183847	• CORD INSTL,PARACHUTE STOWAGE /SEE FIG. 102/ •	4	A
-115	734-183314	• CUSHION ASSY,CABIN CHAIR BACK UPHOLSTERED • • /SEE FIG. 102/	4	A
-116	734-183315	• CUSHION ASSY,CABIN CHAIR SEAT UPHOLSTERED • • /SEE FIG. 102/	4	A
-117	734-183314	• CUSHION ASSY,CABIN CHAIR BACK UPHOLSTERED • • /SEE FIG. 105/	3	B
-118	734-183315	• CUSHION ASSY,CABIN CHAIR SEAT UPHOLSTERED • • /SEE FIG. 105/	3	B
-119	54H19650	• BELT,LAP SAFETY /TYPE MD-1/ /GFAE/. • • • • • /SEE FIG. 102 & 103/	6	A
-120	54H19650	• BELT,LAP SAFETY /TYPE MD-1/ /GFAE/. • • • • • /SEE FIG. 103 & 105/	5	B
-121	50D3770	• STRAP,SHOULDER /TYPE G-1/ • • • • • • • • • /SEE FIG. 102 & 103/	6	A
-122	50D3770	• STRAP,SHOULDER /TYPE G-1/ • • • • • • • • • /SEE FIG. 103 & 105/	5	B
-123	734-183296	• CUSHION ASSY,PILOTS COMPARTMENT CHAIR BACK. • /SEE FIG. 103/	2	
-124	183295	• CUSHION ASSY,PILOTS COMPARTMENT CHAIR SEAT. • /SEE FIG. 103/	2	
-125	404-185622	• PLATE,BULKHEAD DOOR LATCH /SEE FIG. 104/. • •	2	
-126	694-183771	• PLATE,REAR COMPARTMENT DOOR THRESHOLD • • • • /SEE FIG. 104/	1	
-127	AN8011-1	• CASE,DATA /GFAE/ /SEE FIG. 104/ • • • • • • •	1	
-128	794-180062	• PLACARD,LAVATORY DOOR /SEE FIG. 104/. • • • •	1	
-129	404-187511	• COVER ASSY,ELEVATOR CONTROL COLUMN CHAIN. • • /SEE FIG. 67/	2	
-130	734-184342	• CABLE ASSY,SAFETY BELT /SEE FIG. 103/ • • • •	4	

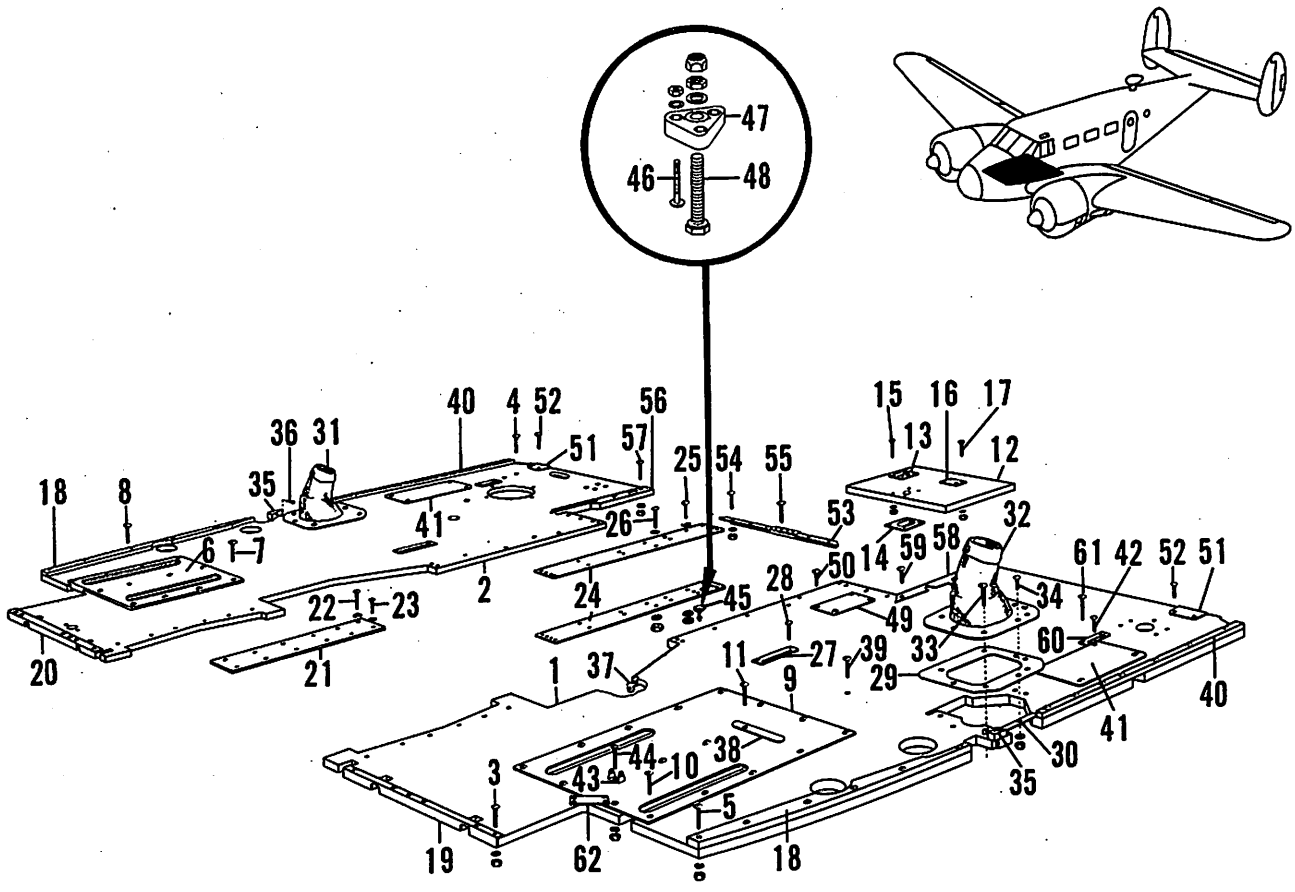

Figure 100. Pilot's Compartment Floorboard Installation C45H-4-100

FIG. & INDEX NO.	PART NO.	DESCRIPTION 1 2 3 4 5 6 7	UNITS PER ASSY	USABLE ON CODE
100	694-183120	FLOORBOARD INSTL,PILOTS COMPARTMENT . . . . . /SEE FIG. 99 FOR NHA/	REF	
- 1	694-183138	. BOARD ASSY,PILOTS COMPARTMENT RH.	1	A-1,B
	694-183138-6	. BOARD ASSY,PILOTS COMPARTMENT RH.	1	A-2
- 2	694-183137	. BOARD ASSY,PILOTS COMPARTMENT LH. . . . . /ATTACHING PARTS/	1	
- 3	AN525-832R16	. SCREW	7	
- 4	AN525-832R18	. SCREW	33	
- 5	AN525-832R24	. SCREW	12	
	AN960-8	. WASHER.	52	
	AN365-832	. NUT . . . . . ----*----	52	
- 6	894-183138-40	. . PLATE ASSY,COPILOT RUDDER PEDALS FLOOR. . . /ATTACHING PARTS/	1	
- 7	AN505-4-14	. . SCREW	8	
- 8	AN515-8R	. . SCREW	2	
	AN365-440	. . NUT . . . . . ----*----	2	
- 9	404-183137-44	. . PLATE ASSY,PILOT RUDDER PEDALS FLOOR. . . /ATTACHING PARTS/	1	
- 10	AN505-4-14	. . SCREW	4	
- 11	AN526-832-14	. . SCREW	10	
	AN365-440	. . NUT . . . . . ----*----	14	

FIG. & INDEX NO.	PART NO.	DESCRIPTION 1 2 3 4 5 6 7	UNITS PER ASSY	USABLE ON CODE
100 - 12	804-183138	. DOOR ASSY,PILOTS FLOORBOARD INSPECTION. . . .	1	
- 13	804-183473	. . LATCH,FLOORBOARD FASTENING.	1	
- 14	804-183139	. . PLATE,INSPECTION DOOR LATCH COVER . . . . . /ATTACHING PARTS/	1	
- 15	AN505-6-16	. . SCREW	4	
	AN960-6	. . WASHER.	4	
	AN340-6	. . NUT	4	
		----*----		
- 16	180090	. . PLACARD,ELEVATOR TAB. . . . . /ATTACHING PARTS/	1	
- 17	AN526-632-14	. . SCREW	4	
	AN960-6	. . WASHER.	4	
	AN365-632	. . NUT	4	
		----*----		
- 18	894-183123	. STRIP,PILOTS FLOORBOARD FWD	2	
- 19	404-183126	. STRIP,PILOTS FLOORBOARD FRONT LH.	1	
- 20	404-183127	. STRIP,PILOTS FLOORBOARD FRONT RH.	1	
- 21	183124	. COVER,ELEVATOR CONTROL PULLEY . . . . . /ATTACHING PARTS/	1	
- 22	AN525-832R18	. SCREW	6	
- 23	AN525-832R16	. SCREW	6	
	AN960-8	. WASHER.	12	
		----*----		
- 24	404-183134	. PLATE,PILOTS COMPARTMENT FLOOR JOINT. . . . . /ATTACHING PARTS/	2	
- 25	AN525-832R16	. SCREW	7	
- 26	AN525-832R18	. SCREW	2	
	AN960-8	. WASHER.	18	
	AN365-832	. NUT	9	
		----*----		
- 27	183121-2	. REINFORCEMENT,SEAT SUPPORT FLOOR. . . . . /ATTACHING PARTS/	2	
- 28	AN525-832R16	. SCREW	4	
	AN960-8	. WASHER.	4	
	AN365-832	. NUT	4	
		----*----		
- 29	187509A	. PLATE,CONTROL COLUMN BOOT	2	
- 30	183126	. PLATE,CONTROL COLUMN BOOT REINFORCEMENT . . .	2	
- 31	187503-1	. BOOT ASSY,CONTROL COLUMN RH	1	
- 32	187503	. BOOT ASSY,CONTROL COLUMN LH . . . . . /ATTACHING PARTS/	1	
- 33	AN525-832R16	. SCREW	6	
- 34	AN525-832R8	. SCREW	1	
	AN960-8	. WASHER.	1	
	AN365-832	. NUT	1	
		----*----		
- 35	183127	. BLOCK,PILOTS COMPARTMENT UPHOLSTERY . . . . . /ATTACHING PARTS/	2	
- 36	AN550-3-5	. SCREW	1	
		----*----		
- 37	183145P	. CLIP,PARKING BRAKE SPRING	1	
- 38	668-3-8FR	. STRAP ASSY,TIE DOWN CONTROL LOCK /00502/. . .	1	
- 39	AN526-1032R16	. SCREW	1	
	100801-D3-0562	. BUSHING	1	
	AN960-10	. WASHER.	1	
	AN365-1032	. NUT	1	
- 40	814-183125	. STRIP,PILOTS FLOOR REAR	2	
- 41	183149	. PLATE,AILERON CABLE INSPECTION. . . . . /ATTACHING PARTS/	2	
- 42	AN525-832R14	. SCREW	4	
		----*----		
- 43	894-187009	. BRACKET,CONTROL LOCK FLOOR. . . . . /ATTACHING PARTS/	1	
- 44	AN520-10R18	. SCREW	2	
	AN960-10	. WASHER.	2	
	AN365-1032	. NUT	2	
		----*----		

FIG. & INDEX NO.	PART NO.	DESCRIPTION 1 2 3 4 5 6 7	UNITS PER ASSY	USABLE ON CODE
100 - 45	814-180537	. POST ASSY,TERMINAL DISTRIBUTION . . . . . /ATTACHING PARTS/	1	
- 46	AN526-632-18	. SCREW	3	
	AN960-6	. WASHER.	3	
	AN365-632	. NUT	3	
		----*----		
- 47	182020	. . POST,TERMINAL DISTRIBUTION.	1	
- 48	105982-4A-15-004	. . BOLT.	1	
	AN960-416L	. . WASHER.	1	
	AN365-428	. . NUT	1	
	AN316-4R	. . NUT	1	
- 49	180091	. PLACARD,LANDING GEAR & FLAP . . . . . /ATTACHING PARTS/	1	
- 50	AN526-632-14	. SCREW	4	
	AN960-6	. WASHER.	4	
	AN365-632	. NUT	4	
		----*----		
- 51	183131	. PLATE,AILERON PULLEY INSPECTION . . . . . /ATTACHING PARTS/	2	
- 52	AN525-832R14	. SCREW	2	
		----*----		
- 53	183139L	. CHANNEL,FLOOR EDGING FRONT. . . . . /ATTACHING PARTS/	1	
- 54	AN525-832R16	. SCREW	5	
- 55	AN525-832R18	. SCREW	4	
	AN960-8	. WASHER.	9	
	AN365-832	. NUT	9	
		----*----		
- 56	183144L	. CHANNEL,FLOOR EDGING RH . . . . . /ATTACHING PARTS/	1	
- 57	AN525-832R18	. SCREW	4	
	AN960-8	. WASHER.	4	
	AN365-832	. NUT	4	
		----*----		
- 58	183141L	. CHANNEL,FLOOR EDGING LH . . . . . /ATTACHING PARTS/	1	
- 59	AN525-832R16	. SCREW	1	
	AN960-8	. WASHER.	1	
	AN365-832	. NUT	1	
		----*----		
- 60	18321-1	. REINFORCEMENT,FLOORBOARD SEAT SUPPORT . . . . /ATTACHING PARTS/	2	
- 61	AN525-832R18	. SCREW	4	
	AN960-8	. WASHER.	4	
	AN365-832	. NUT	4	
		----*----		
- 62	694-183121	. GUARD,CABLE AUTOMATIC PILOT ELEVATOR.	1	A-1,B
	894-183122	. PLATE ASSY.	1	A-2
	894-183122-1	. PLATE ASSY.	1	A-2

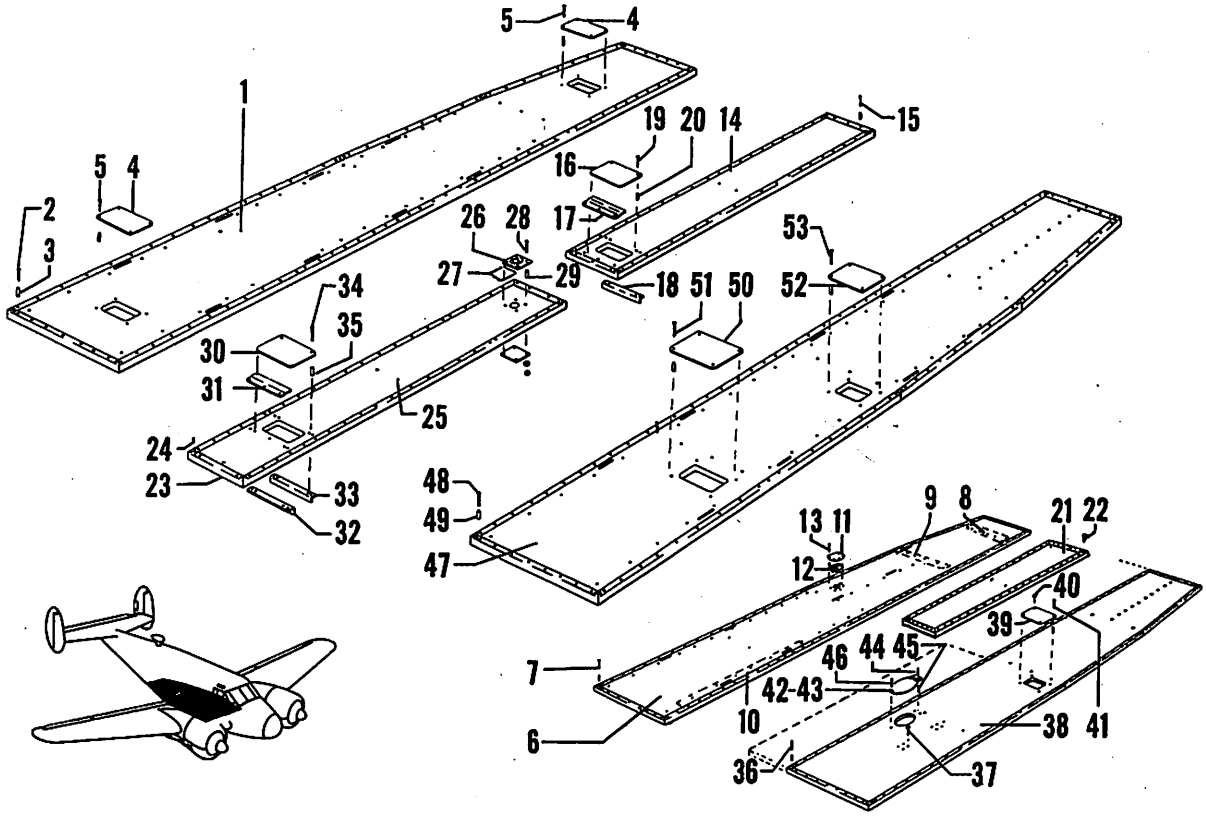

Figure 101. Cabin Floor Installation

C45H-4-101

FIG. & INDEX NO.	PART NO.	DESCRIPTION 1 2 3 4 5 6 7	UNITS PER ASSY	USABLE ON CODE
101	694-183100	FLOOR INSTL,CABIN /SEE FIG. 99 FOR NHA/	REF	A
	694-183101	FLOOR INSTL,CABIN /SEE FIG. 99 FOR NHA/	REF	B
- 1	894-183311	. FLOOR ASSY,CABIN RH /ATTACHING PARTS/	1	A
- 2	AN525-832R16	. SCREW	79	
		----*----		
- 3	404-180234	. . SPACER,SCREW REINFORCEMENT	100	A
- 4	183111	. . PLATE,INSPECTION /ATTACHING PARTS/	2	A
- 5	AN526-832-18	. . SCREW	4	
		----*----		
- 6	694-183105	. FLOOR ASSY,CABIN RH /ATTACHING PARTS/	1	B
- 7	AN526-832R16	. SCREW	70	
		----*----		
- 8	694-183105-27	. . PAD	1	B
- 9	694-183105-21	. . PAD	1	B
- 10	694-183105-17	. . PAD	1	B
- 11	84-183123	. . PLATE,DRIFTMETER SEAL HOLD DOWN	1	B
- 12	84-183124	. . SEAL,DRIFTMETER HOLE /ATTACHING PARTS/	1	B
- 13	AN526-832R18	. . SCREW	5	
	AN960-8	. . WASHER	5	
	AN365-832	. . NUT	5	
		----*----		

FIG. & INDEX NO.	PART NO.	DESCRIPTION 1 2 3 4 5 6 7	UNITS PER ASSY	USABLE ON CODE
101 - 14	183109	. FLOOR ASSY,CABIN REAR CENTER. . . . . /ATTACHING PARTS/	1	A
- 15	AN525-832R16	. SCREW	45	
		----*----		
- 16	183157	. . DOOR ASSY,CABLE INSPECTION.	1	A
- 17	183158	. . RETAINER,CABLE INSPECTION DOOR ASSY	1	A
- 18	183159	. . FASTENER ASSY,CABLE INSPECTION DOOR ASSY. . /ATTACHING PARTS/	1	A
- 19	AN526-832-16	. . SCREW	5	
- 20	100696	. . BUSHING	5	
	AN960-8	. . WASHER.	5	
	AN365-832	. . NUT	5	
		----*----		
- 21	644-183109	. FLOOR ASSY,CABIN REAR CENTER. . . . . /ATTACHING PARTS/	1	B
- 22	AN526-832R16	. SCREW	47	
		----*----		
- 23	183108	. FLOOR ASSY,CABIN FWD CENTER . . . . . /ATTACHING PARTS/	1	
- 24	AN525-832R16	. SCREW	42	A
- 25	AN526-832R16	. SCREW	42	B
		----*----		
- 26	457	. . RING,BRASS FLUSH /76623/.	1	
- 27	183112	. . REINFORCEMENT . . . . . /ATTACHING PARTS/	1	
- 28	AN505-4-16	. . SCREW	4	
- 29	S-220-1	. . BUSHING	4	
	AN960-4	. . WASHER.	4	
	AN340-4	. . NUT	4	
		----*----		
- 30	183157	. . DOOR ASSY,CABLE INSPECTION.	1	
- 31	183158	. . RETAINER,CABLE INSPECTION DOOR ASSY	1	
- 32	183159	. . FASTENER ASSY,CABLE INSPECTION DOOR ASSY. .	1	
- 33	183160	. . REINFORCEMENT,INSPECTION DOOR ASSY RETAINER /ATTACHING PARTS/	1	
- 34	AN520-832-16	. . SCREW	7	
- 35	S-220-1	. . BUSHING	7	
	AN960-8	. . WASHER.	7	
	AN365-832	. . NUT	7	
		----*----		
	694-183104	. FLOOR ASSY,CABIN LEFT . . . . . /ATTACHING PARTS/	1	B
- 36	AN526-832R16	. SCREW	49	
- 37	AN526-1032R16	. SCREW	8	
		----*----		
- 38	644-183103-2	. . FLOORBOARD.	1	B
- 39	183111	. . PLATE,INSPECTION. . . . . /ATTACHING PARTS/	1	B
- 40	AN526-832R16	. . SCREW	4	
	108493-832	. . PLATE,NUT	4	
- 41	AN507-440R14	. . SCREW	8	
	AN365-440	. . NUT	8	
		----*----		
- 42	644-184441	. . DOOR ASSY,DRIFT SIGNAL CHUTE.	1	B
- 43	644-183103-30	. . DOOR ASSY,COVER . . . . . /ATTACHING PARTS/	1	B
- 44	AN526-632R24	. . SCREW	2	
	AN365-632	. . NUT	3	
- 45	100696-008-05-018	. . SPACER.	3	
	AN960-6	. . WASHER.	3	
- 46	AN526-632R14	. . SCREW	1	
	84-184118	. . CLIP.	1	
		----*----		

FIG. & INDEX NO.	PART NO.	DESCRIPTION 1 2 3 4 5 6 7	UNITS PER ASSY	USABLE ON CODE
101 - 47	694-183103	• FLOOR ASSY,CABIN LH	1	A
		/ATTACHING PARTS/		
- 48	AN525-832R16	• SCREW	78	
		----*----		
- 49	404-180234	• • SPACER,SCREW REINFORCEMENT	96	A
- 50	824-183319	• • PLATE,INSPECTION	1	A
		/ATTACHING PARTS/		
- 51	AN526-832-16	• • SCREW	4	
		----*----		
- 52	183111	• • PLATE,INSPECTION	1	A
		/ATTACHING PARTS/		
- 53	AN526-832-16	• • SCREW	4	
		----*----		

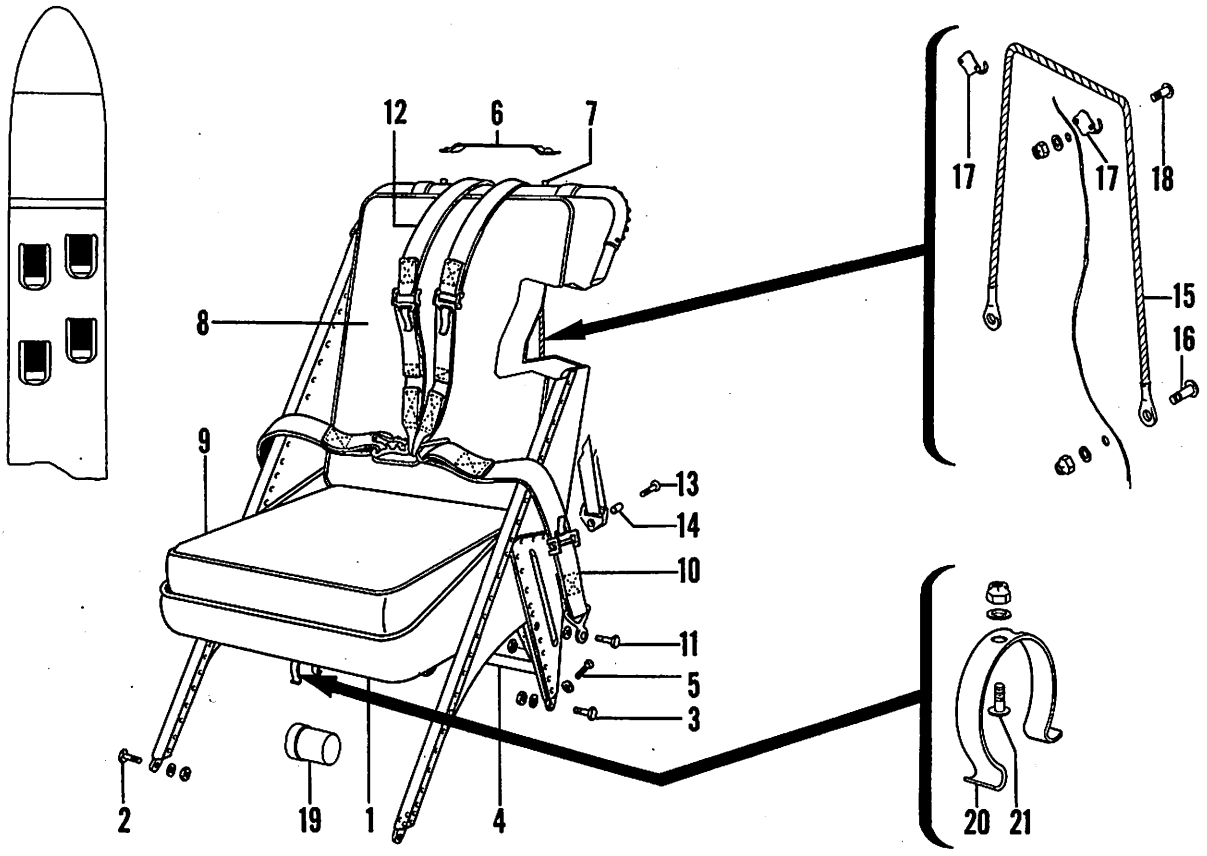

Figure 102. Cabin Seat Assembly

C45H-4-102

FIG. & INDEX NO.	PART NO.	DESCRIPTION 1 2 3 4 5 6 7	UNITS PER ASSY	USABLE ON CODE
102 - 1	734-183302	SEAT ASSY,HIGH STRENGTH /SEE FIG. 99 FOR NHA/ . /ATTACHING PARTS/	REF	
- 2	AN4-7A	BOLT.	2	
- 3	AN4-6A	BOLT.	2	
	AN960-416	WASHER.	4	
	AN365-428	NUT	4	
		----*----		
- 4	734-183302-30	. TUBE,SEAT BRACE . . . . . /ATTACHING PARTS/	1	
- 5	AN526-832-5	. SCREW	2	
	AN960-8	. WASHER.	2	
		----*----		
- 6	734-183302-24	. GUIDE ASSY,SHOULDER STRAP . . . . . /ATTACHING PARTS/	1	
- 7	AN227-10BM10	. STUD.	2	
		----*----		
- 8	734-183314	CUSHION ASSY,CABIN CHAIR BACK UPHOLSTERED . . . /SEE FIG. 99 FOR NHA/	REF	A
- 9	734-183315	CUSHION ASSY,CABIN CHAIR SEAT UPHOLSTERED . . . /SEE FIG. 99 FOR NHA/	REF	A
- 10	54H19650	BELT,SAFETY LAP /TYPE MD-1/ /GFAE/. . . . . /SEE FIG. 99 FOR NHA/ /ATTACHING PARTS/	REF	A
- 11	AN24-20A	BOLT.	2	
	AN960-416	WASHER.	2	
	AN364-428	NUT	2	
		----*----		

FIG. & INDEX NO.	PART NO.	DESCRIPTION 1 2 3 4 5 6 7	UNITS PER ASSY	USABLE ON CODE
102 - 12	50D3770	STRAP,SHOULDER /AF TYPE G-1/ . . . . . /SEE FIG. 99 FOR NHA/ /ATTACHING PARTS/	REF	A
- 13	AN23-11A	BOLT	2	
- 14	105739-X0186-025-0234	BUSHING	2	
	AN364-1032	NUT	2	
		----*----		
	734-183847	CORD INSTL,PARACHUTE STOWAGE . . . . . /SEE FIG. 99 FOR NHA/	REF	A
- 15	734-183868	. CORD ASSY,PARACHUTE STOWAGE . . . . . /ATTACHING PARTS/	1	A
- 16	AN526-1032R7	. SCREW	2	
	AN960-10L	. WASHER	2	
	AN365-1032	. NUT	2	
		----*----		
- 17	93	. HOOK,ALUMINUM /71694/ . . . . . /ATTACHING PARTS/	2	A
- 18	AN515-6R7	. SCREW	2	
	AN960-6L	. WASHER	2	
	AN365-632	. NUT	2	
		----*----		
	115043	CONTAINER,/SEE FIG. 99 FOR NHA/	REF	A
- 19	8700-222400	CUP,SANITARY /SEE FIG. 99 FOR NHA/	REF	B
- 20	183364	CLAMP,/SEE FIG. 99 FOR NHA/	REF	A
	183364	CLAMP,/SEE FIG. 99 FOR NHA/ . . . . . /ATTACHING PARTS/	REF	B
- 21	AN515-8-6	SCREW	2	
	AN365-832	NUT	2	
		----*----		

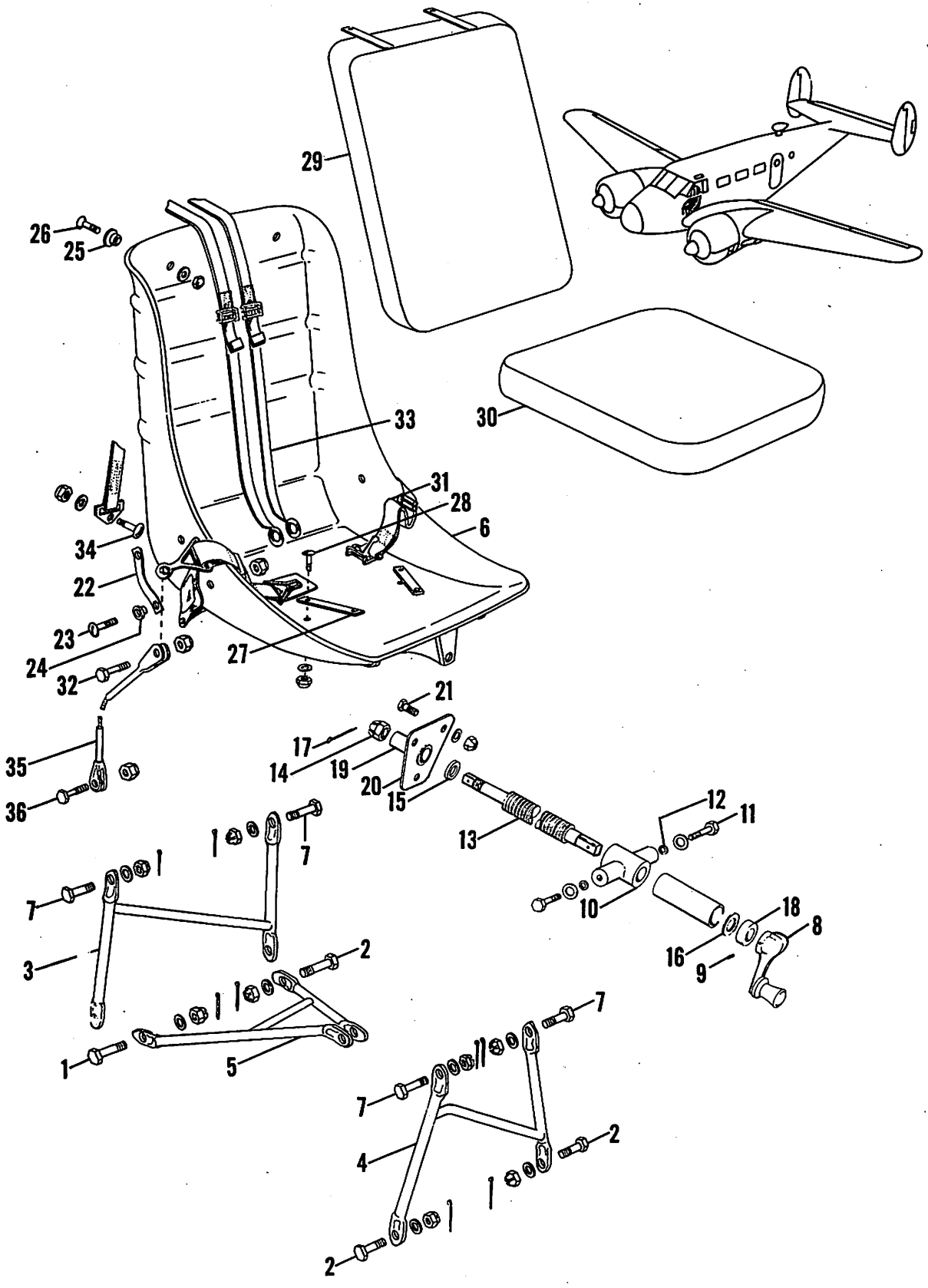

Figure 103. Pilot's Compartment Chair Assembly

C45H-4-103

FIG. & INDEX NO.	PART NO.	DESCRIPTION 1 2 3 4 5 6 7	UNITS PER ASSY	USABLE ON CODE
103	734-183297	SEAT ASSY,PILOTS METAL LH /SEE FIG. 99 FOR NHA/	REF	
	734-183297-1	SEAT ASSY,PILOTS METAL RH /SEE FIG. 99 FOR NHA/	REF	
		/ATTACHING PARTS/		
- 1	A-74-6	BOLT,/MAKE FR AN4 BOLT/	1	
- 2	AN4-6	BOLT	3	
	AN960-416	WASHER	4	
	AN310-4	NUT	4	
	AN380-2-2	PIN,COTTER	4	
		----*----		
- 3	183309	. LEG ASSY,PILOTS SEAT REAR	1	
- 4	804-183315	. LEG ASSY,PILOTS SEAT FRONT	1	
- 5	804-183320	. BRACE ASSY,PILOTS SEAT	1	
- 6	734-183297-2	. BUCKET,PILOTS SEAT METAL	1	
		/ATTACHING PARTS/		
- 7	AN4-6	. BOLT	4	
	AN960-416L	. WASHER	4	
	AN310-4	. NUT	4	
	AN380-2-2	. PIN,COTTER	4	
		----*----		
- 8	51A-66	. HANDLE,CRANK /72019/	1	
		/ATTACHING PARTS/		
- 9	102809-125-024	. PIN,DRILL ROD	1	
		----*----		
- 10	804-183318	. UNIVERSAL,PILOTS SEAT	1	
		/ATTACHING PARTS/		
- 11	AN73-4	. BOLT	2	
	AN960-10L	. WASHER	2	
		----*----		
- 12	105739-X0194-0252-0105	. BUSHING	2	
- 13	804-183322	. SCREW,PILOTS SEAT ADJUSTING	1	
- 14	AN310-6	. NUT	1	
- 15	AN960-616	. WASHER	1	
- 16	AN960-716	. WASHER	1	
- 17	AN380-3-3	. PIN,COTTER	1	
- 18	100696-D25-21-127	. SPACER	1	
- 19	734-183297-16	. BUSHING	1	
- 20	734-183297-12	. PLATE	1	
		/ATTACHING PARTS/		
- 21	AN3-3A	. BOLT	3	
	AN960-10L	. WASHER	3	
	AN365-1032	. NUT	3	
		----*----		
- 22	804-183301-2	. STRAP	2	
		/ATTACHING PARTS/		
- 23	AN526-632-6	. SCREW	4	
- 24	AN230B10	. GROMMET	4	
	AN365-632	. NUT	4	
		----*----		
- 25	AN227-8B	. FASTENER,SNAP	4	
		/ATTACHING PARTS/		
- 26	AN507-632R6	. SCREW	1	
	AN960-6L	. WASHER	1	
	AN365-632	. NUT	1	
		----*----		
- 27	734-183297-18	. STRAP	2	
		/ATTACHING PARTS/		
- 28	AN526-632-9	. SCREW	1	
	AN960-10L	. WASHER	1	
	AN365-632	. NUT	1	
		----*----		
- 29	734-183296	CUSHION ASSY,PILOTS COMPARTMENT CHAIR BACK /SEE FIG. 99 FOR NHA/	REF	
- 30	183295	CUSHION ASSY,PILOTS COMPARTMENT CHAIR SEAT /SEE FIG. 99 FOR NHA/	REF	

FIG. & INDEX NO.	PART NO.	DESCRIPTION 1 2 3 4 5 6 7	UNITS PER ASSY	USABLE ON CODE
103 - 31	54H19650	BELT,LAP SAFETY /TYPE MD-1/ /GFAE/. . . . . /SEE FIG. 99 FOR NHA/ /ATTACHING PARTS/	REF	
- 32	AN24-12A	BOLT.	2	
	AN364-428	NUT	2	
		----*----		
- 33	50D3770	STRAP,SHOULDER /AF TYPE G-1/. . . . . /SEE FIG. 99 FOR NHA/ /ATTACHING PARTS/	REF	
- 34	AN24-12A	BOLT.	2	
	AN364-428	NUT	2	
		----*----		
- 35	734-184342	CABLE ASSY,SAFETY BELT /SEE FIG. 99 FOR NHA/. . /ATTACHING PARTS/	REF	
- 36	AN24-12A	BOLT.	2	
	AN364-428	NUT	2	
		----*----		

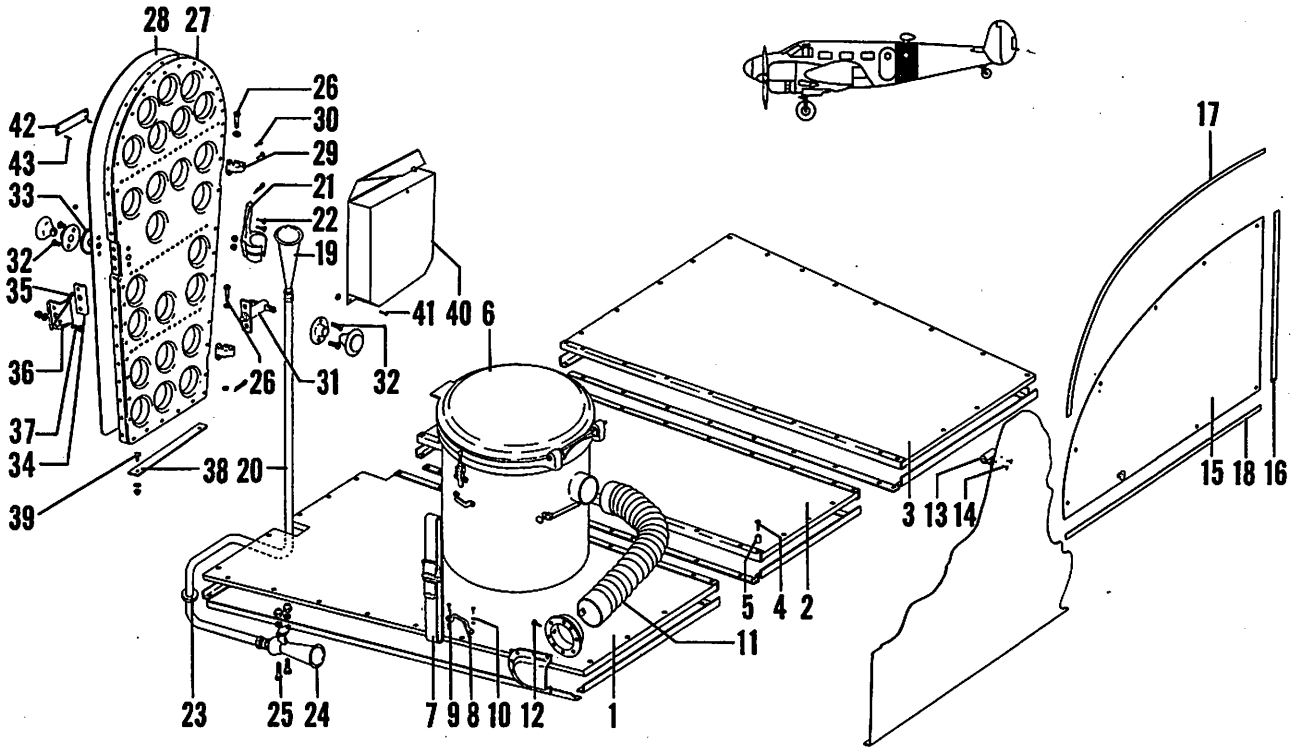

Figure 104. Lavatory Compartment Installation

C45H-4-104

FIG. & INDEX NO.	PART NO.	DESCRIPTION 1 2 3 4 5 6 7	UNITS PER ASSY	USABLE ON CODE
104	694-183200	COMPARTMENT INSTL,LAVATORY/SEE FIG. 99 FOR NHA/	REF	A
	694-183202	COMPARTMENT INSTL,LAVATORY/SEE FIG. 99 FOR NHA/	REF	B
	404-183150	. FLOOR INSTL,REAR BAGGAGE COMPARTMENT.	1	A
	694-183150	. FLOOR INSTL,REAR BAGGAGE COMPARTMENT.	1	B
- 1	404-183152	. . BOARD ASSY,LAVATORY FLOOR LH.	1	
- 2	404-183151	. . BOARD ASSY,LAVATORY FLOOR CENTER.	1	
- 3	407-183152-1	. . BOARD ASSY,LAVATORY FLOOR RH.	1	A
	694-183152	. . BOARD ASSY,LAVATORY FLOOR RH.	1	B
		/ATTACHING PARTS/		
- 4	AN525-832R16	. . SCREW	71	A
	AN526-832R16	. . SCREW	71	B
		----*----		
- 5	100696-D08-06-018	. . . SPACER.	71	
- 6	1608A	. TOILET,SANITARY /81866/	1	
- 7	183209	. BELT ASSY,LAVATORY INSTL.	2	
- 8	7276	. LOOP,FOOTMAN /81685/.	2	
		/ATTACHING PARTS/		
- 9	AN510-10-18	. SCREW	2	
- 10	100696-D10-08-020	. SPACER.	2	
	AN960-10L	. WASHER.	2	
	AN970-3	. WASHER.	2	
	AN365-1032	. NUT	2	
		----*----		

FIG. & INDEX NO.	PART NO.	DESCRIPTION 1 2 3 4 5 6 7	UNITS PER ASSY	USABLE ON CODE
104 - 11	P212	. HOSE,AIR DUCT /61463/ . . . . . /ATTACHING PARTS/	1	
- 12	AN530-8-6	. SCREW	1	
	A1788-82-3	. NUT,/78553/	1	
		----*----		
- 13	2609	. HOLDER,TISSUE /80896/ . . . . . /ATTACHING PARTS/	1	
- 14	AN505-8R16	. SCREW	2	
	AN960-8	. WASHER.	2	
	AN365-832	. NUT	2	
		----*----		
- 15	794-183030	. PANEL ASSY,#10 BULKHEAD	1	
- 16	694-183200-2	. SEAL.	1	A
	694-183202-1	. SEAL.	1	B
- 17	694-183200-4	. SEAL.	1	A
	694-183202-3	. SEAL.	1	B
- 18	694-183200-6	. SEAL.	1	A
	694-183202-5	. SEAL.	1	B
	694-180635	. TUBE INSTL,REAR RELIEF.	1	
- 19	AN8018-1	. . HORN,RELIEF TUBE.	1	
- 20	106043-S12-08-500	. . TUBE,RELIEF	1	
- 21	AN8021-1	. . BRACKET,HORN SUPPORT. . . . . /ATTACHING PARTS/	1	
- 22	AN515-632-12	. . SCREW	2	
		----*----		
- 23	AN931-10-14	. . GROMMET	1	
- 24	41A9177	. . VENTURI,RELIEF TUBE . . . . . /ATTACHING PARTS/	1	
- 25	AN526-832-8	. . SCREW	2	
	AN936A8	. . WASHER.	2	
		----*----		
	184820	DOOR ASSY,BULKHEAD COMPLETE . . . . . /SEE FIG. 99 FOR NHA/ /ATTACHING PARTS/	REF	
- 26	AN393-35	PIN	2	
	AN380-2-2	PIN,COTTER.	2	
		----*----		
- 27	184830	. DOOR ASSY,BULKHEAD UNFINISHED	1	
- 28	183012	. PANEL,UPHOLSTERY.	1	
- 29	184832	. HINGE ASSY,BULKHEAD DOOR. . . . . /ATTACHING PARTS/	2	
- 30	AN510-10-10	. SCREW	2	
		----*----		
- 31	1503F-1503	. LATCH ASSY,BULKHEAD DOOR /76623/. . . . . /ATTACHING PARTS/	1	
- 32	SK83-632-16	. SCREW,/73439/	4	
		----*----		
- 33	100951-DD-187-017-108	. SPACER.	1	
- 34	185622	. PLATE,STRIKER . . . . . /ATTACHING PARTS/	1	
- 35	SK72-832-8	. SCREW,/73439/	2	
		----*----		
- 36	404-185622	PLATE,BULKHEAD DOOR LATCH /SEE FIG. 99 FOR NHA/ /ATTACHING PARTS/	REF	
- 37	NAS387-632-6	SCREW	3	
		----*----		
- 38	694-183771	PLATE,REAR COMPARTMENT DOOR THRESHOLD . . . . . /SEE FIG. 99 FOR NHA/ /ATTACHING PARTS/	REF	
- 39	AN505-8R8	SCREW	2	
	AN960-8	WASHER.	2	
	AN365-832	NUT	2	
		----*----		

FIG. & INDEX NO.	PART NO.	DESCRIPTION 1 2 3 4 5 6 7	UNITS PER ASSY	USABLE ON CODE
104 - 40	AN8011-1	CASE,DATA /GFAE/ /SEE FIG. 99 FOR NHA/	REF	
		/ATTACHING PARTS/		
- 41	AN510-1032-10	SCREW	4	
	AN970-3	WASHER	4	
	AN365-832	NUT	4	
		-----*-----		
- 42	794-180062	PLACARD,LAVATORY DOOR /SEE FIG. 99 FOR NHA/	REF	
		/ATTACHING PARTS/		
- 43	AN515-4-8	SCREW	4	
	AN960-4	WASHER	4	
	AN365-440	NUT	4	
		-----*-----		

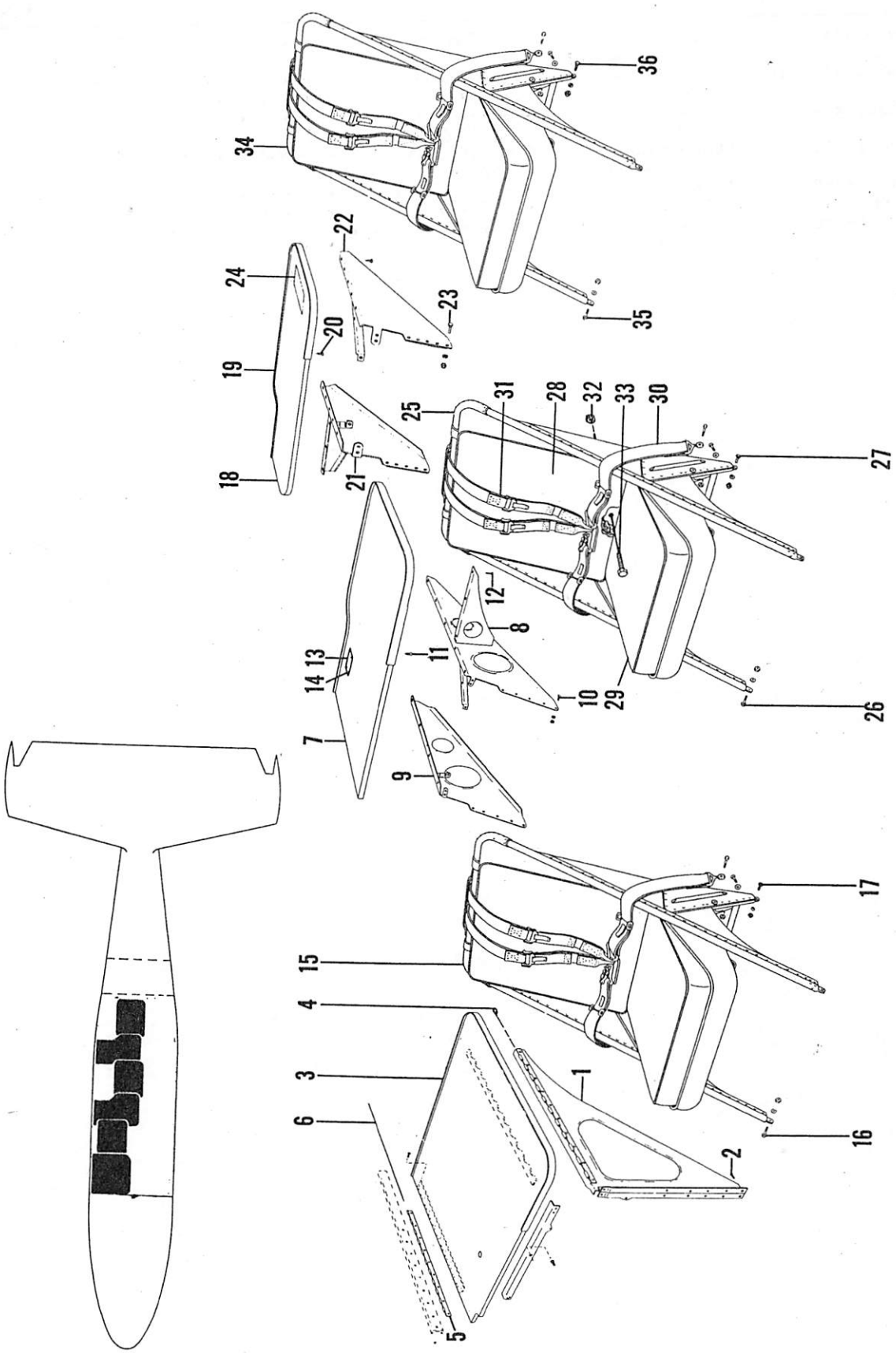

Figure 105. Navigator's Table & Seat Assembly

FIG. & INDEX NO.	PART NO.	DESCRIPTION 1 2 3 4 5 6 7	UNITS PER ASSY	USABLE ON CODE
105	694-183460	TABLE INSTL,1ST NAVIGATORS/SEE FIG. 99 FOR NHA/	REF	B
- 1	644-180638	. BRACKET ASSY. . . . . /ATTACHING PARTS/	1	B
- 2	AN526-832R8	. SCREW . . . . . ----*----	21	
- 3	694-183465	. TABLE ASSY. . . . . /ATTACHING PARTS/	1	B
- 4	694-183460-5	. PIN,HINGE . . . . . ----*----	1	
- 5	644-183451	. CHANNEL ASSY. . . . . /ATTACHING PARTS/	1	B
- 6	694-183460-7	. PIN,HINGE . . . . . ----*----	1	
	694-183461	TABLE ASSY,2ND NAVIGATORS /SEE FIG. 99 FOR NHA/	REF	B
	644-183461-14	. STRUCTURE ASSY,2ND NAVIGATORS TABLE	1	B
- 7	644-183461-12	. . BOARD ASSY.	1	B
- 8	644-183461-2	. . BRACKET ASSY,LH	1	B
- 9	644-183461-3	. . BRACKET ASSY,RH . . . . . /ATTACHING PARTS/	1	B
- 10	AN545-8-3	. . SCREW	14	
- 11	AN550-8-3	. . SCREW	25	
- 12	AN526-832R6	. . SCREW	14	
	AN960-8	. . WASHER.	14	
	AN364-832	. . NUT . . . . . ----*----	14	
- 13	644-180034	. . PLACARD,DRIFTMETER /TYPE B-3/ . . . . . /ATTACHING PARTS/	1	B
- 14	AN530-2R4	. . SCREW . . . . . ----*----	4	
- 15	694-183461-1	. . SEAT ASSY,HIGH STRENGTH NAVIGATORS. . . . /ATTACHING PARTS/	1	B
- 16	AN4-7A	. . BOLT.	2	
- 17	AN4-6A	. . BOLT.	2	
	AN960-416	. . WASHER.	4	
	AN365-428	. . NUT . . . . . ----*----	4	
	694-183462	TABLE ASSY,3RD NAVIGATORS /SEE FIG. 99 FOR NHA/	REF	B
- 18	694-183462-5	. BOARD	1	B
→ 19	694-183462-3	. STRIP . . . . . /ATTACHING PARTS/	1	B
- 20	AN550-8-3	. SCREW . . . . . ----*----	20	
- 21	694-183462-2	. BRACKET ASSY,RH	1	B
- 22	694-183462-1	. BRACKET ASSY,LH . . . . . /ATTACHING PARTS/	1	B
- 23	AN526R832-6	. SCREW	8	
	AN960-8	. WASHER.	8	
	AN364-832	. NUT . . . . . ----*----	8	
- 24	694-180083	. PLACARD,NAVIGATORS TABLE.	1	B
- 25	734-183302	. SEAT ASSY,HIGH STRENGTH /SEE FIG. 102/. . . . /ATTACHING PARTS/	1	B
- 26	AN4-7A	. BOLT.	2	
- 28	AN4-6A	. BOLT.	2	
	AN960-416	. WASHER.	4	
	AN365-428	. NUT . . . . . ----*----	4	
- 28	734-183314	CUSHION ASSY,CABIN CHAIR BACK UPHOLSTERED . . . /SEE FIG. 99 FOR NHA/	REF	B
- 29	734-183315	CUSHION ASSY,CABIN CHAIR SEAT UPHOLSTERED . . . /SEE FIG. 99 FOR NHA/	REF	B
- 30	54H19650	BELT,LAP SAFETY /TYPE MD-1/ /GFAE/. . . . . /SEE FIG. 99 FOR NHA/	REF	B

FIG. & INDEX NO.	PART NO.	DESCRIPTION 1 2 3 4 5 6 7	UNITS PER ASSY	USABLE ON CODE
105 - 31	50D3770	STRAP,SHOULDER /AF TYPE G-1/. . . . . /SEE FIG. 99 FOR NHA/ /ATTACHING PARTS/	REF	
- 32	AN364-1032	NUT	2	
- 33	AN23-11A	BOLT.	2	
		----*----		
- 34	734-183302	SEAT ASSY,HIGH STRENGTH /SEE FIG. 102/. . . . . /SEE FIG. 99 FOR NHA/ /ATTACHING PARTS/	REF	B
- 35	AN4-7A	BOLT.	2	
- 36	AN4-6A	BOLT.	2	
	AN960-416	WASHER.	4	
	AN365-428	NUT	4	
		----*----		

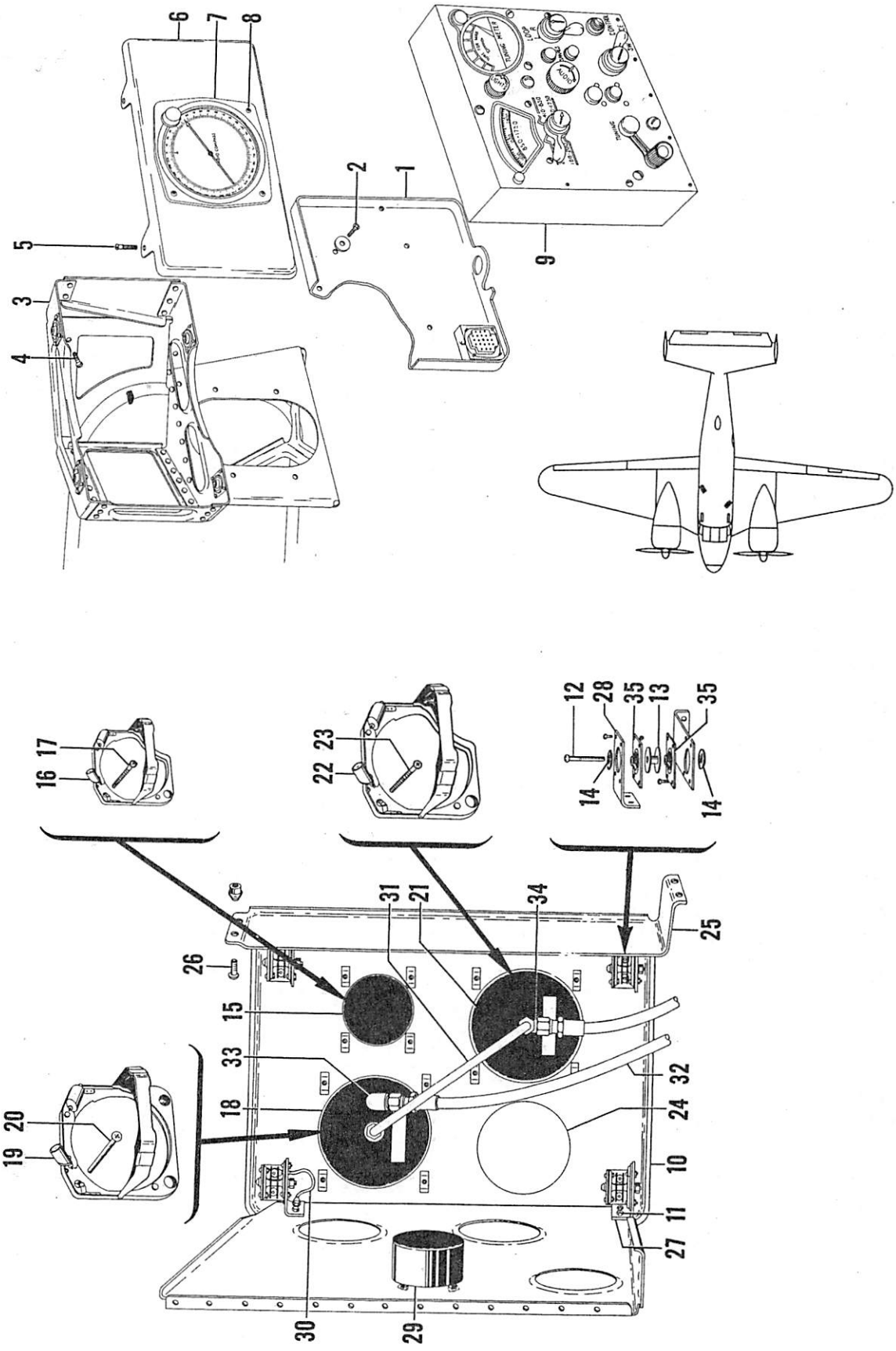

Figure 106. Navigator's Instrument Panel Assembly

FIG. & INDEX NO.	PART NO.	DESCRIPTION 1 2 3 4 5 6 7	UNITS PER ASSY	USABLE ON CODE
106	694-183601	PANEL INSTL,2ND NAVIGATORS INSTRUMENTATION. . . /SEE FIG. 99 FOR NHA/	REF	B
- 1	694-183601-1	. PLATE,MOUNTING /MAKE FR FT224-A/. . . . . /ATTACHING PARTS/	1	B
- 2	AN520-10R10	. SCREW	4	
	AN960-10	. WASHER.	4	
		----*----		
- 3	644-183603	. MOUNT ASSY. . . . . /ATTACHING PARTS/	1	B
- 4	AN520-10R10	. SCREW	7	
		----*----		
	694-183601-3	. PANEL ASSY,2ND NAVIGATORS . . . . . /ATTACHING PARTS/	1	B
- 5	AN515-8R12	. SCREW	4	
	AN8013D1	. WASHER.	4	
	AN340-832	. NUT	4	
		----*----		
- 6	694-183602	. . PANEL,2ND NAVIGATORS.	1	B
- 7	I82A	. . INDICATOR . . . . . /ATTACHING PARTS/	1	B
- 8	AN515B6R14	. . SCREW	3	
	NAS487-14	. . NUT,SPEED	3	
		----*----		
- 9	C4/ARN-7	. BOX,CONTROL	1	
	694-183600	PANEL INSTL,1ST NAVIGATORS FLOATING INSTRUMENT. /SEE FIG. 99 FOR NHA/	REF	B
- 10	694-183610	. PANEL ASSY,1ST NAVIGATORS FLOATING INSTRUMENT /ATTACHING PARTS/	1	B
- 11	AN526-832-8	. SCREW	2	
	AN526-832-7	. SCREW	6	
	AN365-832	. NUT	8	
- 12	AN515-8-24	. SCREW	4	
- 13	105090-040-2-028	. WASHER.	8	
- 14	100696-S08-06-006	. SPACER.	4	
	AN365-832	. NUT	4	
		----*----		
- 15	AN5743T1A	. . CLOCK	1	B
- 16	B-4752	. . FIXTURE,LIGHT /72914/ . . . . . /ATTACHING PARTS/	1	B
- 17	AN507-632R20	. . SCREW	2	
	AN515-6R20	. . SCREW	1	
	NAS487-14	. . NUT,MOUNTING.	3	
		----*----		
- 18	694-183725	. . INDICATOR,C-14 AIRSPEED	1	B
- 19	B-4756	. . FIXTURE,LIGHT /72914/ . . . . . /ATTACHING PARTS/	1	B
- 20	AN507-632R20	. . SCREW	2	
	AN515-6R20	. . SCREW	2	
	NAS487-14	. . NUT,MOUNTING.	4	
		----*----		
- 21	AN5760-4B	. . ALTIMETER	1	B
- 22	B-4757	. . FIXTURE,LIGHT /72914/ . . . . . /ATTACHING PARTS/	2	B
- 23	AN507-632R20	. . SCREW	2	
	AN515-6R20	. . SCREW	1	
	NAS487-14	. . NUT,MOUNTING.	3	
		----*----		
- 24	NO NUMBER	. . INDICATOR,/TYPE V-3/. . . . . /AF SPECIFICATION 21174/ /GFAE/	1	B-7
- 25	694-183605	. SUPPORT,INSTRUMENT PANEL MOUNTING OUTBD . . . /ATTACHING PARTS/	1	B
- 26	AN526-632-6	. SCREW	4	
		----*----		

FIG. & INDEX NO.	PART NO.	DESCRIPTION 1 2 3 4 5 6 7	UNITS PER ASSY	USABLE ON CODE
106 - 27	694-183603	BRACKET,CABIN INSTRUMENT PANEL INBD	2	B
- 28	84-183604	BRACKET,CABIN INSTRUMENT PANEL OUTBD	6	B
- 29	AN3155-25-50	RHEOSTAT	1	B
- 30	NAF1065F4	JUMPER,BOND	1	B
- 31	694-184731	TUBE ASSY	1	B
- 32	AN6270-4-12	HOSE ASSY	2	B
- 33	AN822-6D	ELBOW,90 DEGREE	1	B
- 34	AN826-4D	TEE	1	B
- 35	AN8008D3	INSULATOR,VIBRATION	8	B

SECTION III

NUMERICAL PARTS LIST

NOTE
C-45G Microfilm Index numbers shown in Numerical Parts List are for Microfilm set (MF01-C45-2) correct to May 1955.

STOCK NUMBER	PART NUMBER	SOURCE CODE		FIGURE AND INDEX NO.	QTY. PER ARTICLE	MICRO-FILM INDEX
	A-22			21 - 26	2	
	A-24976			94 - 6	1	
	A-42			21	2	
	A-5299-24			78 - 34	5	
	A-74-6			103 - 1	2	
	AAF500A-10-12			58 - 16	10	
	AAF771-2			56 - 18	2	
	AAF811-FT-8			83 - 53	2	
	AAF811-HT-8D			83 - 44	2	
	AAF811-JT-8			83 - 49	2	
	AAF811BT10D			17	2	
	AAF811CT10			50 - 25	7	
	AAF811CT10D			50 - 5	1	
	AAF811CT4D			49 - 24	1	
	AAF811CT45-10			50 - 29	3	
	AAF811CT45-4D			71 -147	1	
	AAF811FT-10			50 - 31	1	
	AAF811FT-4			49 - 18	2	
	AAF811FT10			50 - 43	1	
	AAF811FT4			50 - 56	1	
	AAF811FT4D			49 - 29	1	
	AAF811HT10D			17 - 66	16	
	AAF811HT-8D			57 - 30	1	
	AAF811HT10D			50 - 1	5	
	AAF811JT-10D			50 - 86	1	
	AAF811JT10D			50 - 3	3	
	AAF811JT4D			49 - 27	1	
	AAF811RT10			50 - 23	1	
	AAF811T10CS			17	2	
	AC811CT-10D			50 -114	1	
	AC811ET-10D			50 -101	1	
	ADD3721R			21 - 47	1	
	AD5721R			21	1	
	AC811HT-10D			50 -100	8	
	AM-142-A1C			97 - 70	2	
	AN/ASA-3			10 - 36	12	
	AN100-3			64 - 37	2	
	AN104B			97 -204	1	
	AN115-16			97 -217	2	
	AN155-16S			57 - 62	6	
	AN115-21			97 -192	1	
	AN155-32L			61 - 7	11	
	AN155-32S			27 - 48	15	
	AN155-46L			65 - 37	1	
	AN155-8S			30 - 75	4	
	AN161-16RS			66 - 16	2	
	AN161-22RL			27 - 49	2	
	AN161-22RS			63 - 32	2	
	AN161-32LL			63 - 8	4	
	AN165-32S			32 - 83	1	
	AN170-16LS			57 - 64	1	
	AN170-16RS			57 - 63	3	
	AN170-8RS			30 - 76	2	
	AN200KP4			21 - 66	12	
	AN200K3L			12 - 8	1	
	AN200K4			9 - 25	4	
	AN200K6			21 - 76	4	
	AN201KP20A			25 - 3	2	
	AN201KP6A			25 - 4	3	
	AN201KP8A			67 - 26	7	
	AN201K10A			26 - 7	2	
	AN201K12A			21 - 79	5	
	AN201K4A			75 - 7	2	
	AN201K6A			9 - 22	4	
	AN201K8A			75 - 14	4	
	AN210-1A			30 - 81	9	
	AN210-1B			62 - 9	10	
	AN210-2A			9 - 81	9	
	AN210-2B			62 - 5	15	
	AN210-3A			27 - 50	10	
	AN210-3B			61 - 10	20	
	AN210-4			18 - 37	2	
	AN210-4A			9 - 78	4	
	AN210-4B			61	20	
	AN227-10BM10			102 - 7	8	
	AN227-22			99 - 77	8	
	AN227-8B			103 - 25	8	
	AN23-11A			99 - 70	20	
	AN23-11/M/			63 - 24	1	
	AN23-15/M/			61 - 14	4	
	AN23-19			27 - 17	3	
	AN23-29			27 - 18	1	
	AN23-8A			97 -218	4	
	AN23-9A			64	1	
	AN290B10			103 - 24	8	
	AN24-12A			103 - 32	16	
	AN24-20A			102 - 11	8	
	AN24-27/M/			67 - 31	2	
	AN24-8			30 - 17	3	
	AN270B8			52 - 76	4	
	AN271B10			73 - 4	4	
	AN280H204			12 - 13	1	
	AN280H304			75 - 5	2	
	AN280H404			75 - 13	2	
	AN280H406**			25	1	

STOCK NUMBER	PART NUMBER	SOURCE CODE		FIGURE AND INDEX NO.	QTY. PER ARTICLE	MICRO-FILM INDEX
	AN286-1			31 - 17	1	
	AN286-3			31 - 1	1	
	AN3-10			16 - 23	21	
	AN3-10A			48 - 47	34	
	AN3-11			16 - 22	87	
	AN3-11A			13 - 74	28	
	AN3-11/M/			65 - 28	1	
	AN3-12			24 - 11	27	
	AN3-12A			41 - 9	13	
	AN3-12/M/			9 - 67	4	
	AN3-13			34 - 4	6	
	AN3-13A			27 - 4	23	
	AN3-13/M/			65 - 4	1	
	AN3-14			41 - 1	2	
	AN3-14A			47 - 15	14	
	AN3-15			30 - 3	4	
	AN3-15A			47 - 2	4	
	AN3-16			24 - 55	6	
	AN3-20A			47 - 13	5	
	AN3-21A			50 - 95	3	
	AN3-22			9 - 82	4	
	AN3-22A			35 - 8	46	
	AN3-23			67 - 13	2	
	AN3-23A			71 - 32	1	
	AN3-24A			27 - 53	12	
	AN3-25			34 - 22	2	
	AN3-25A			30 - 14	4	
	AN3-27			87 - 8	6	
	AN3-27A			83 - 15	2	
	AN3-3A			15 - 14	38	
	AN3-4			9 - 39	38	
	AN3-4A			35 - 63	106	
	AN3-5			9 - 40	16	
	AN3-5A			36 - 24	72	
	AN3-5/M/			63 - 31	2	
	AN3-6			27 - 46	30	
	AN3-6A			70 - 4	7	
	AN3-6/M/			63 - 2	6	
	AN3-7			13 - 6	53	
	AN3-7A			9 - 24	83	
	AN3-7A/M/			9 - 35	4	
	AN3DD6			32 - 81	1	
	AN3016B-16S-8S			94 - 46	1	
	AN3021-1			81 - 14	1	
	AN3021-2			81 - 4	21	
	AN3021-3			81 - 19	3	
	AN3021-8			81 - 43	2	
	AN3022-15B			81 - 49	2	
	AN3022-4B			81 - 50	2	
	AN3022-8			53 - 73	1	
	AN3023-8			53 - 74	1	
	AN3025-1			95 - 16	2	
	AN3027-2			81 - 42	1	
	AN3027-3			81 - 40	2	
	AN3028-3			53 - 75	4	
	AN303-21			58 -116	4	
	AN3033-3			17 - 32	1	
	AN3033-4			18 - 42	1	
	AN3037-2			94 -170	1	
	AN3047-9			94 -150	3	
	AN3057-10			17	6	
	AN3057-12			97 - 63	2	
	AN3057-16			95 - 10	6	
	AN3057-16A			92 - 30	4	
	AN3057-3			96 - 46	4	
	AN3057-4			94 - 15	10	
	AN3057-6			94 - 21	18	
	AN3057-8			18	3	
	AN3064-4			96 - 22	2	
	AN3066-4			96 - 23	2	
	AN3068-8			94 - 5	1	
	AN3095-9			17 - 36	2	
	AN3097-13			94 -159	1	
	AN3097-2			94 -162	1	
	AN310-3			9	272	
	AN310-4			8	240	
	AN310-5			27	14	
	AN310-6			17	14	
	AN310-7			33	26	
	AN310-8			23	6	
	AN310-9			21	2	
	AN3100A-12S-3S			94 - 20	2	
	AN3100A-12S-4P			94	2	
	AN3100A-14S-1P			94 - 49	2	
	AN3100A-14S-7P			94 - 42	2	
	AN3100A-16S-1P			18 - 49	1	
	AN3100A-18-22P			92 - 34	2	
	AN3100A-18-6S			92 - 9	2	
	AN3100A-28-5S			92 - 29	2	
	AN3101M-22-14P			97 -151	1	
	AN3102-24-28P			97 -173	1	
	AN3102A-22-4S			97 - 54	1	
	AN3106A-10SL-3S			94 - 51	2	
	AN3106A-12S-3S			94 - 14	6	
	AN3106A-14S-2S			97 - 40	2	

STOCK NUMBER	PART NUMBER	SOURCE CODE		FIGURE AND INDEX NO.	QTY. PER ARTICLE	MICRO-FILM INDEX
	AN3106A-14S-5P			94 -118	1	
	AN3106A-14S-5S			94 - 19	4	
	AN3106A-14S-6S			94 - 70	1	
	AN3106A-14S-7S			94 - 17	5	
	AN3106A-16S-1S			94 -116	1	
	AN3106B-10-5S			17 - 33	1	
	AN3106B-12S-3P			96 - 40	4	
	AN3106B-14S-2S			94 - 18	1	
	AN3106B-14S-2S			94 - 52	2	
	AN3106B-18-5S			18 - 43	2	
	AN3106B-18-9S			97 - 64	1	
	AN3106B-20-27S			97 - 62	1	
	AN3106B-24-28S			97 -156	2	
	AN3106B-24-28SW			97 -159	1	
	AN3106M-20-29S			97 - 57	1	
	AN3106M-22-14S			97 -121	1	
	AN3106M-28-12S			97 -164	1	
	AN3108A-18-22S			96 - 38	2	
	AN3108B-10S-2S			96 - 44	4	
	AN3108B-12S-3S			96 - 41	4	
	AN3108B-12S-4S			96	4	
	AN3108B-14S-1S			94 - 53	4	
	AN3108B-14S-2S			94	1	
	AN3108B-22-4S			97 - 86	1	
	AN3108B-24-7S			95 - 9	2	
	AN312A			97 - 92	4	
	AN3121-313			94 - 23	8	
	AN3124-307			94 - 33	1	
	AN3124SB307			94 -171	1	
	AN3127-302			94 -123	1	
	AN3131-303			94 - 79	4	
	AN3133-311			17 - 43	1	
	AN3136-323			98 - 38	3	
	AN3140-328			54 - 12	1	
	AN315-3R			41	3	
	AN315-4R			35 - 44	20	
	AN315-5R			93	4	
	AN315-6R			21 - 73	4	
	AN3151-2			93 - 2	2	
	AN3155-25-15			78 - 36	2	
	AN3155-25-25			78 - 35	4	
	AN3155-25-50			106 - 29	1	
	AN3155-25-75			94 - 38	1	
	AN3155-50-30			81 - 2	1	
	AN3156-2			93 - 3	4	
	AN3157-4			97 -120	1	
	AN3157-6			78 - 25	16	
	AN3158-1			10 - 38	1	
	AN3158-2			10 - 39	1	
	AN316-4			58	14	
	AN316-4R			24 - 39	11	
	AN316-5			16 - 17	2	
	AN316-5R			72	3	
	AN316-6			6 - 18	4	
	AN316-8R			7 - 4	4	
	AN3160-5			40 - 63	2	
	AN3167-1			21	2	
	AN320-3			12	44	
	AN320-4			30	32	
	AN320-5			16 - 11	4	
	AN320-6			67	10	
	AN320-9			21	2	
	AN3203V30			81 - 18	1	
	AN3210-1			21	6	
	AN3213-1A			81 - 30	1	
	AN3220-2			94 - 25	2	
	AN3226-1			81 - 37	1	
	AN3226-2			81 - 44	1	
	AN3227-1			81 - 46	1	
	AN3227-5			95 - 11	2	
	AN3234-1			54 - 45	6	
	AN335-5			29 - 24	1	
	AN3370-1			93 - 14	2	
	AN3371-1			92 - 7	2	
	AN3371-2			40 - 38	2	
	AN340-3			5	2	
	AN340-4			24	20	
	AN340-6			94	42	
	AN340-632			94	2	
	AN340-8			41	58	
	AN340-8-5			58 -124	4	
	AN340-832			106	4	
	AN3400-2			94 -166	3	
	AN341-6			92 - 25	287	
	AN3420-12			96	2	
	AN3420-14			92 - 31	2	
	AN3420-16			92	4	
	AN3432-6-12			92 - 24	233	
	AN3432-6-14			97 - 19	24	
	AN3433-2-2			94 - 95	8	
	AN3433-2-3			97 - 24	1	
	AN3433-2-6			97 - 23	1	
	AN3435-2-15			97 - 16	1	
	AN3435-2-17			97 - 15	1	
	AN3435-2-19			97 - 14	6	
	AN3435-2-20			98 - 42	4	
	AN3435-2-3			92 - 40	1	
	AN3435-2-4			94 - 89	4	
	AN3435-2-5			92 - 54	1	
	AN3435-2-7			92 - 22	4	
	AN3437-1-5			94 - 93	4	
	AN3437-1-6			92 - 58	1	
	AN3437-1-8			92 - 21	4	
	AN345-10			45	3	
	AN345-4			13	8	
	AN345B416			82	2	
	AN3499-1			94 -100	1	
	AN350-1032			94 - 29	1	
	AN355-5			33	4	
	AN360-1032			92	4	
	AN363-524			33	8	
	AN364-1032			5	39	
	AN364-1216			21	4	
	AN364-428			87	26	
	AN364-524			33 - 43	8	
	AN364-624			21	2	
	AN364-624C			21 - 74	4	
	AN364-832			99	38	
	AN365-1032			4 - 27	AR	
	AN365-428			19	183	
	AN365-440			9	81	
	AN365-524			21	56	
	AN365-6			10	14	
	AN365-624			30	6	
	AN365-632			3	555	
	AN365-8-32			58	6	
	AN365-820			23	2	
	AN365-832			5	AR	
	AN365B428			99	4	
	AN365B832			99	27	
	AN365B832A			82	4	
	AN365D632			79	18	
	AN365D832			79	4	
	AN372-1032			36	44	
	AN372-832			33	16	
	AN380-1-1			54	3	
	AN380-2-1			4	11	
	AN380-2-2			8	678	
	AN380-2-3			27	17	
	AN380-2-4			30	6	
	AN380-3-3			4	39	
	AN380-3-4			23	6	
	AN380-4-3			34	2	
	AN380-4-4			21	4	
	AN380-5-10			30	4	
	AN380C2-2			90	8	
	AN381-2-5			94	1	
	AN381-4-20			21	2	
	AN386-1-10			24 - 53	8	
	AN386-1-6A			75 - 18	4	
	AN386-2-10			51 - 36	4	
	AN386-5-15			67 - 5	8	
	AN386-5-16			67 - 6	4	
	AN386-5-18			67 - 16	2	
	AN390-19			97 -216	2	
	AN392-15			54 - 3	4	
	AN392-19			10 - 14	4	
	AN392-21			9 - 80	8	
	AN392-23			16	19	
	AN392-27			52 - 81	3	
	AN392-31			52 - 87	2	
	AN392-33			54 - 10	2	
	AN392-35			61 - 5	2	
	AN392-37			17 - 59	5	
	AN392-61			9 - 83	2	
	AN392-63			65 - 11	1	
	AN393-11			24 -140	23	
	AN393-17			30 - 32	2	
	AN393-19			97 -193	2	
	AN393-21			30 - 49	5	
	AN393-25			4 - 35	7	
	AN393-29			87	2	
	AN393-31			4 - 38	1	
	AN393-35			104 - 26	2	
	AN393-37			72 - 5	4	
	AN393-51			57 - 59	4	
	AN393-77			87 - 58	6	
	AN393-9			57	2	
	AN393-93			21 - 38	2	
	AN394-23			30 - 52	1	
	AN395-25			27 - 62	1	
	AN396-37			64 - 27	1	
	AN4			103 - 1	1	
	AN4-10			14 - 18	25	
	AN4-10A			61 - 2	7	
	AN4-10/M/			63 - 48	2	
	AN4-11			8 - 6	60	
	AN4-11A			51 - 74	5	
	AN4-11/M/			9 - 79	4	
	AN4-12			8 - 13	6	

STOCK NUMBER	PART NUMBER	SOURCE CODE		FIGURE AND INDEX NO.	QTY. PER ARTICLE	MICRO-FILM INDEX
	AN4-12A			69 - 9	4	
	AN4-12/M/			65 - 35	1	
	AN4-13			8	3	
	AN4-13/M/			9 - 63	11	
	AN4-14			35 - 4	10	
	AN4-14/M/			9 - 64	5	
	AN4-15			24 - 30	8	
	AN4-15A			23 - 33	8	
	AN4-15/M/			17 - 58	6	
	AN4-16			21 - 3	4	
	AN4-16A			82 - 22	8	
	AN4-16/M/			17 - 48	12	
	AN4-17			65 - 16	2	
	AN4-17/M/			65 - 58	2	
	AN4-20/M/			65 - 55	2	
	AN4-21			21 - 4	4	
	AN4-22			65 - 17	2	
	AN4-24			72 - 44	8	
	AN4-24/M/			65 - 6	1	
	AN4-26/M/			9 - 42	3	
	AN4-27			24 - 58	1	
	AN4-30			59 - 57	4	
	AN4-37/M/			67 - 29	2	
	AN4-4			32 - 22	2	
	AN4-4A			33 - 10	10	
	AN4-40			30 - 6	2	
	AN4-5			24 - 2	12	
	AN4-5A			71 -165	4	
	AN4-6			24 - 3	34	
	AN4-6A			40 - 7	29	
	AN4-7			16 - 9	4	
	AN4-7A			21 - 11	39	
	AN470AD3			10 - 17	3	
	AN5-10			25 - 14	3	
	AN5-11			25	1	
	AN5-11A			21 - 32	24	
	AN5-12			33 - 46	4	
	AN5-13A			84 - 21	4	
	AN5-16			30 - 11	1	
	AN5-16/M/			32 - 10	1	
	AN5-26			30 - 10	1	
	AN5-26/M/			32 - 9	1	
	AN5-55			27 - 45	6	
	AN500-10-12			38 - 11	4	
	AN500-6-7			75 - 23	4	
	AN500-8-4***			24 - 5	1	
	AN500-8-6***		*	24 - 4	1	
	AN500A10-10			25 - 11	40	
	AN500A10-12			57 - 11	24	
	AN500A10-7			38 - 5	32	
	AN501A10-8			21 - 24	25	
	AN500A416-8			50 - 41	10	
	AN500A6-12			27 - 56	2	
	AN500A6-3			10 - 10	1	
	AN500A6-5			27 - 55	2	
	AN500A6-6			53 - 76	2	
	AN501-10-12			94 -194	4	
	AN501A10-4			31 - 21	1	
	AN502-10-10			8 - 2	128	
	AN502-10-12			8 - 3	16	
	AN502-10-16			24 - 73	1	
	AN502-10-8			87 - 11	6	
	AN502-416-6			49	16	
	AN502-6-4			23 - 17	2	
	AN503-8-6			21 - 43	10	
	AN503-8-4			86 - 67	24	
	AN505-4-14			100 - 7	12	
	AN505-4-16			101 - 28	4	
	AN505-6-16			100 - 15	4	
	AN505-6-6			87	8	
	AN505-6-7			17 - 31	6	
	AN505-6-8			5 - 20	6	
	AN505-6R6			19 - 10	30	
	AN505-8-10			99 - 12	8	
	AN505-8-16			58 - 42	10	
	AN505-8-18			5 - 18	14	
	AN505-8-24			12 - 24	3	
	AN505-8-28			12 - 23	3	
	AN505-8-32			58 - 36	20	
	AN505-8-8			4 - 10	6	
	AN505-8R16			104 - 14	2	
	AN505-8R6			64	2	
	AN505-8R8			104 - 39	2	
	AN505R6-8			53 - 79	4	
	AN507-1032-28			99	2	
	AN507-1032R10			86 - 56	4	
	AN507-440-8			54 - 51	6	
	AN507-440R14			101 - 41	8	
	AN507-440R20			94	4	
	AN507-6-6			9 - 33	15	
	AN507-632-10			81 - 13	20	
	AN507-632-14			97 - 90	6	
	AN507-632-6			52 - 89	26	
	AN507-632-9			94 -182	2	
	AN507-632R20			106 - 17	8	

STOCK NUMBER	PART NUMBER	SOURCE CODE		FIGURE AND INDEX NO.	QTY. PER ARTICLE	MICRO-FILM INDEX
	AN507-632R6			103 - 26	8	
	AN507-8-14			58 - 9	8	
	AN507-8R7			64 - 44	4	
	AN507-8R8			4 - 25	4	
	AN507-832-10			17 - 15	28	
	AN507-832-6			58 - 28	8	
	AN507-832-8			98 - 48	8	
	AN507-836R10			69 - 23	2	
	AN507B1032R16			79	6	
	AN507B632-20			78	38	
	AN507B632R16			78	44	
	AN509-10-11			99 - 69	8	
	AN509-10-46			90 - 12	4	
	AN509-10R10			6 - 20	6	
	AN510-10-10			104 - 30	4	
	AN510-10-18			104 - 9	4	
	AN510-10-24			10 - 5	16	
	AN510-10-8			4 - 2	12	
	AN510-1032-10			104 - 41	4	
	AN515-10R10			86 - 52	2	
	AN515-10R17			86	8	
	AN515-10R6			86	4	
	AN515-10R8			86 - 76	6	
	AN515-3-3			5 - 7	1	
	AN515-3R3			5 - 13	1	
	AN515-4-10			54 - 52	7	
	AN515-4-14			24 - 36	10	
	AN515-4-4			17 - 22	10	
	AN515-4-5			18 - 50	16	
	AN515-4-6			92 - 23	9	
	AN515-4-7			92 - 56	5	
	AN515-4-8			104 - 43	4	
	AN515-4R			92	8	
	AN515-4RB			97 - 55	4	
	AN515-5-6			96 - 20	2	
	AN515-6-10			5 - 34	34	
	AN515-6-13			97 -196	8	
	AN515-6-14			96 - 21	10	
	AN515-6-28			97 - 17	16	
	AN515-6-4			81 - 28	4	
	AN515-6-40			13 - 56	4	
	AN515-6-6			9 - 75	149	
	AN515-6-7			95 - 23	2	
	AN515-6-8			9 - 44	37	
	AN515-6R20			106	5	
	AN515-6R3			5 - 9	1	
	AN515-6R32			78	2	
	AN515-6R4			94 - 77	4	
	AN515-6R6			40 - 64	4	
	AN515-6R7			94 - 19	76	
	AN515-6R8			54 - 11	2	
	AN515-632-12			104 - 22	2	
	AN515-8-10			17 - 35	63	
	AN515-8-12			13 - 71	32	
	AN515-8-14			59 - 48	7	
	AN515-8-16			24 - 19	21	
	AN515-8-18			24 - 20	10	
	AN515-8-20			58	10	
	AN515-8-24			27 - 25	14	
	AN515-8-4			81 - 22	4	
	AN515-8-40			34 - 28	2	
	AN515-8-48			87 - 38	2	
	AN515-8-5			26 - 13	2	
	AN515-8-6			5 - 2	48	
	AN515-8-7			14 - 16	55	
	AN515-8-8			5 - 23	344	
	AN515-8-9			98	12	
	AN515-8R			100 - 8	2	
	AN515-8R10			69 - 14	19	
	AN515-8R12			106 - 5	4	
	AN515-8R16			94	1	
	AN515-8R24			71 - 96	19	
	AN515-8R28			71 -100	3	
	AN515-8R40			94 - 41	4	
	AN515-8R6			94 -115	6	
	AN515-8R7			64	100	
	AN515-8R8			56 - 2	47	
	AN515B6R14			106 - 8	3	
	AN515B6R16			78	24	
	AN515B6R20			78	10	
	AN515B6R6			78 - 9	26	
	AN515B8-10			99 - 94	8	
	AN515B8-18			99 -111	3	
	AN515B8-22			99 - 88	8	
	AN515B8-7			99 - 96	8	
	AN515B8R6			79 - 38	4	
	AN515B8R7			82 - 12	4	
	AN515DD6R6			94 - 72	6	
	AN518-6D			71 -101	1	
	AN520-10-10			32 - 78	25	
	AN520-10-12			33 - 74	12	
	AN520-10-14			28 - 4	11	
	AN520-10-16			60 - 4	12	
	AN520-10-18			59 - 14	10	
	AN520-10-20			59 - 2	10	

STOCK NUMBER	PART NUMBER	SOURCE CODE		FIGURE AND INDEX NO.	QTY. PER ARTICLE	MICRO-FILM INDEX
	AN520-10-30			52 - 7	4	
	AN520-10-5			38 - 20	20	
	AN520-10-6			97	8	
	AN520-10-7			10 - 19	49	
	AN520-10-8			5 - 5	85	
	AN520-10R10			106 - 2	11	
	AN520-10R16			94 -151	18	
	AN520-10R17			86 - 65	16	
	AN520-10R18			100 - 44	2	
	AN520-10R6			86 - 42	4	
	AN520-10R7			71 - 89	4	
	AN520-4-8			13 - 49	4	
	AN520-6-5			77 - 51	4	
	AN520-832-16			101 - 34	7	
	AN520-832R10			89 - 5	2	
	AN520B10R20			79	8	
	AN520B10R8			78 - 7	8	
	AN520B416-24			99 - 98	4	
	AN524-4-10			13 - 50	4	
	AN525-832-7			13 - 23	14	
	AN525-832-8			13 - 16	8	
	AN525-832-9			13 - 17	12	
	AN525-832R			11 - 14	36	
	AN525-832R14			100 - 42	12	
	AN525-832R16			100 - 3	375	
	AN525-832R18			100 - 4	92	
	AN525-832R24			100 - 5	24	
	AN525-832R8			100 - 34	2	
	AN526-10-14			13 - 61	6	
	AN526-1032-10			17 - 13	20	
	AN526-1032-18			19 - 33	AR	
	AN526-1032-6			18 - 8	27	
	AN526-1032-8			14 - 27	47	
	AN526-1032-9			95 - 17	8	
	AN526-1032R10			4 - 18	1	
	AN526-1032R12			52 -113	4	
	AN526-1032R16			100 - 39	9	
	AN526-1032R6			54 - 1	3	
	AN526-1032R7			102 - 16	8	
	AN526-1032R8			86 - 54	4	
	AN526-6-6			12 - 26	4	
	AN526-6-7			5 - 30	12	
	AN526-6-8			5 - 27	44	
	AN526-632			9 - 86	2	
	AN526-632-10			8	AR	
	AN526-632-12			3 - 2	48	
	AN526-632-14			97 -123	12	
	AN526-632-16			92 - 41	6	
	AN526-632-18			100 - 46	3	
	AN526-632-20			92 - 53	11	
	AN526-632-22			98 - 39	3	
	AN526-632-24			21 - 57	5	
	AN526-632-26			98	1	
	AN526-632-28			98	1	
	AN526-632-5			19 - 3	24	
	AN526-632-6			3 - 24	388	
	AN526-632-7			3 - 12	131	
	AN526-632-8			3 - 14	55	
	AN526-632-9			5 - 15	37	
	AN526-632R10			50 - 72	4	
	AN526-632R14			101 - 46	1	
	AN526-632R18			52 - 66	8	
	AN526-632R24			101 - 44	2	
	AN526-632R6			8 - 17	59	
	AN526-632R7			3 - 41	2	
	AN526-632R9			98 - 46	3	
	AN526-637-7			19 - 27	10	
	AN526-8-10			26 - 11	1	
	AN526-8-12			4 - 31	1	
	AN526-8-18			5 - 19	1	
	AN526-8-6			13 - 64	38	
	AN526-8-8			5 - 21	114	
	AN526-8-9			13 - 12	152	
	AN526-8R18			97 -137	4	
	AN526-8R7			99	6	
	AN526-8R9			4 - 24	2	
	AN526-832			87 - 42	20	
	AN526-832-10			77 - 44	23	
	AN526-832-12			9 - 77	13	
	AN526-832-14			95 - 7	12	
	AN526-832-16			24 - 28	45	
	AN526-832-18			92 - 64	10	
	AN526-832-20			27 - 65	2	
	AN526-832-36			97 -211	2	
	AN526-832-5			94 - 2	10	
	AN526-832-6			9 - 59	81	
	AN526-832-7			14 - 29	97	
	AN526-832-8			9 - 7	124	
	AN526-832-9			2	20	
	AN526-832R10			77	4	
	AN526-832R12			94 - 32	1	
	AN526-832R16			52 - 1	347	
	AN526-832R18			99 -109	15	
	AN526-832R5			2	24	
	AN526-832R6			105 - 12	14	

STOCK NUMBER	PART NUMBER	SOURCE CODE		FIGURE AND INDEX NO.	QTY. PER ARTICLE	MICRO-FILM INDEX
	AN526-832R7			52 - 4	38	
	AN526-832R8			12	41	
	AN526-832R9			69 - 16	44	
	AN526R832-6			105 - 23	16	
	AN530-2R4			105 - 14	4	
	AN530-4-4			71 - 60	8	
	AN530-4-8			10 - 40	4	
	AN530-6-6			10 - 42	2	
	AN530-6R10			99 - 39	8	
	AN530-6R6			64 - 15	4	
	AN530-8-16			20 - 6	2	
	AN530-8-6			104 - 12	1	
	AN530-8-8			33 - 31	22	
	AN535-00-2			51 - 5	8	
	AN535-2-4			4 - 41	2	
	AN535-4-2			99 - 53	2	
	AN545-8-3			105 - 10	14	
	AN550-3-5			100 - 36	2	
	AN550-8-3			105 - 11	45	
	AN5525-1			96 - 42	2	
	AN5525-2			55 - 6	2	
	AN5530T2A-12			78 - 22	2	
	AN5531-2			33 - 54	2	
	AN5536T2A			78 - 21	2	
	AN5540-2			33 - 59	2	
	AN565-4R6			54 - 18	2	
	AN565B4H3			64 - 17	3	
	AN5735-2A			78 - 11	3	
	AN5736-2A			78 - 10	4	
	AN5737-1			99 -110	1	
	AN5738-2			99 - 80	2	
	AN5743-2**			78 - 19	2	
	AN5743T1A			106 - 15	1	
	AN5743T1A**			78	2	
	AN5760-4B			106 - 21	1	
	AN5760L4BD			78 - 14	4	
	AN5763-27			99 - 87	1	
	AN5766T2*			78 - 18	2	
	AN5766T3*			78	2	
	AN5770T2A-12			78 - 17	2	
	AN5771			81 - 17	1	
	AN5771T3A			50 - 71	2	
	AN5771T5A			81 - 15	2	
	AN5773T1A			78 - 16	4	
	AN5775-2			94 - 82	1	
	AN5795T6			78 - 20	2	
	AN5819T4			78 - 23	2	
	AN5820T2			78 - 12	2	
	AN5822-1			44 - 17	3	
	AN5825T6			78 - 13	4	
	AN5829-2			81 - 21	1	
	AN5839-1			78 - 26	5	
	AN6-11			67 - 10	4	
	AN6-23/M/			21 - 59	2	
	AN6-27/M/			21 - 77	4	
	AN6-5A			40 - 39	2	
	AN6003-48A			86 -107	2	
	AN6004-4*			86	2	
	AN6009-2A			86 - 70	9	
	AN6010-1			86 - 41	2	
	AN6021-1A			78 - 43	2	
	AN6024-6			86 - 55	1	
	AN6029-1			78 - 44	2	
	AN6039-5-14			86 - 93	5	
	AN6100-1			48 - 31	2	
	AN6119-2			42 - 2	3	
	AN6121-2			42 - 13	2	
	AN6227-27			31 - 12	4	
	AN6227-29			22 - 5	4	
	AN6227-44			23 - 11	2	
	AN6227-7			23 - 24	2	
	AN6227B15			29 - 16	1	
	AN6227B8			29 - 10	2	
	AN6230-11			22 - 7	2	
	AN6230-12			23 - 10	2	
	AN6230-4			31 - 11	1	
	AN6230-5*			56	2	
	AN6231-17			31 - 8	1	
	AN6231A18			22 - 11	2	
	AN6232C5-1/8			22 - 10	2	
	AN624-10D			59	4	
	AN6244-11			22 - 8	4	
	AN6246-29			22 - 6	8	
	AN6264-10D-11-1/4			59 - 62	1	
	AN6264-10D-26			59	1	
	AN6264-4-10-5/8			40 - 29	2	
	AN6264-4-12			46 - 27	2	
	AN6264-4-14			21 - 9	4	
	AN6264-4-37-1/2			21 - 21	2	
	AN6264-4-32-3/4			21 - 20	2	
	AN6264-6-23-1/2			40 - 16	1	
	AN6264-6-24-1/2			40 - 19	1	
	AN6264-6-29-3/4			40 - 20	1	
	AN6264-6-39-1/2			40 - 15	1	

STOCK NUMBER	PART NUMBER	SOURCE CODE		FIGURE AND INDEX NO.	QTY. PER ARTICLE	MICRO-FILM INDEX
	AN6264-8-14-5/8			59 - 68	2	
	AN6270-10-22			71 - 6	1	
	AN6270-4-10			28 - 14	2	
	AN6270-4-12			71 - 47	4	
	AN6270-4-13			71 - 13	1	
	AN6270-4-14			80 - 36	1	
	AN6270-4-15			80 - 5	2	
	AN6270-4-15-3/4			28 - 12	1	
	AN6270-4-17			71 - 12	1	
	AN6270-4-19			80 - 17	5	
	AN6270-4-19-1/4			28 - 17	1	
	AN6270-4-20			71 - 11	1	
	AN6270-4-22			80 - 26	3	
	AN6270-4-27-1/4			28 - 9	1	
	AN6270-4-7-1/2			80 - 31	2	
	AN6270-6-10			71 - 65	1	
	AN6270-6-12			80 - 22	1	
	AN6270-6-12-1/2			80 - 2	2	
	AN6270-6-13			71 - 34	4	
	AN6270-6-15			71 - 36	3	
	AN6270-6-15-1/5			80 - 20	1	
	AN6270-6-17			71 - 35	3	
	AN6270-6-18			80	1	
	AN6270-6-19			80 - 24	1	
	AN6270-6-22			80 - 10	1	
	AN6270-8-20			71 - 1	1	
	AN6271-4-11			28 - 21	3	
	AN6271-4-12			28 - 24	1	
	AN6271-8-21			71 -155	2	
	AN6271-8-24			40 - 23	2	
	AN6271-8-26-3/4			40 - 4	2	
	AN6271-8-9			40 - 24	2	
	AN6287-1			22 - 21	5	
	AN7-36/M/			33 - 5	4	
	AN7-43/M/			33 - 6	2	
	AN7-47/M/			33 - 3	16	
	AN73-2			90 - 5	4	
	AN73-4			103 - 11	4	
	AN73-6			90 - 2	4	
	AN735D6			58 - 58	8	
	AN737-22			46 - 38	36	
	AN737-22C			71 -150	2	
	AN737-26			93 - 6	2	
	AN737-3D			57 - 73	2	
	AN737-30			55	26	
	AN737-34			33	36	
	AN737-38			33 - 68	6	
	AN737-46			55	52	
	AN737-56			55	20	
	AN737-82			57 - 79	2	
	AN737RM22			56 - 9	4	
	AN737RM38			94 -186	2	
	AN74-5			23 - 4	16	
	AN74-7			72 - 24	1	
	AN74A7			48 - 32	11	
	AN741-10P			92	4	
	AN741-11			59 - 12	4	
	AN741-12P			92 - 79	4	
	AN742-10			42 - 25	6	
	AN742-10C			95 - 24	2	
	AN742-12C			59 - 51	2	
	AN742-14C			71 -144	1	
	AN742-16			59 - 82	3	
	AN742-18			56 - 14	2	
	AN742-4			24 - 41	9	
	AN742-6			85 - 12	12	
	AN742-6C			45 - 7	8	
	AN742-7C			86 - 51	2	
	AN742-8			99 - 50	2	
	AN742-8D			57 - 27	4	
	AN742D10			59 - 13	6	
	AN742D10C			21 - 23	10	
	AN742D12CB			59 - 21	2	
	AN742D14C			59	1	
	AN742D16			48 - 12	8	
	AN742D16C			59 - 66	1	
	AN742D19			94 -187	2	
	AN742D20			96 - 6	2	
	AN742D24			87	2	
	AN742D36			87 - 5	20	
	AN742D4			71 -176	7	
	AN742D5			94 -178	6	
	AN742D6			58 - 60	8	
	AN742D6C			48 - 11	10	
	AN742D7			83 - 42	19	
	AN742D8C			71 - 42	2	
	AN743-1			57 - 28	1	
	AN743-12			48 - 18	8	
	AN748-30			42 - 21	4	
	AN748-34			42 - 4	28	
	AN748-38			33	2	
	AN749-1-3			97 -174	10	
	AN7502-16			30 - 42	4	
	AN7502-39			21 - 37	2	
	AN755-8			55 - 62	2	

STOCK NUMBER	PART NUMBER	SOURCE CODE		FIGURE AND INDEX NO.	QTY. PER ARTICLE	MICRO-FILM INDEX
	AN76A-12			33 - 47	4	
	AN781-4			92 - 8	11	
	AN8-32/M/			23 - 34	2	
	AN8008D10			69 - 26	11	
	AN8008D2			94 -132	4	
	AN8008D3			106 - 35	8	
	AN8008D7			69 - 13	2	
	AN8008D8			99 - 93	8	
	AN8011-1			99 -127	1	
	AN8013D1			106	4	
	AN8013D2			69 - 28	2	
	AN8013D2			82	18	
	AN8018-1			104 - 19	1	
	AN8021-1			104 - 21	1	
	AN804-10D			59 - 29	4	
	AN806-6			85 - 8	4	
	AN811CT45-4D			48 - 36	1	
	AN811FT-4			48 - 30	2	
	AN811FT-4D			48 - 41	1	
	AN811FT4			46 - 48	1	
	AN811JT-4D			48 - 39	1	
	AN814-3			22 - 2	2	
	AN815-10D			43 - 8	12	
	AN815-4			59 - 76	1	
	AN815-4D			28 - 26	30	
	AN815-5D			86 - 79	7	
	AN815-6D			71 - 33	8	
	AN815-7D			71 - 50	1	
	AN815-8D			71 - 40	6	
	AN816-10			50 - 39	3	
	AN816-10D			59 - 4	2	
	AN816-4			40 - 33	6	
	AN816-4-4D			80 - 16	1	
	AN816-4D			28	13	
	AN816-5D			86 - 44	10	
	AN816-6			40 - 12	8	
	AN816-6-2B			71 - 8	6	
	AN816-6D			71 -132	1	
	AN816-7D			80 - 14	1	
	AN816-8			40 - 5	9	
	AN816-8D			71 - 92	9	
	AN821-4D			77 - 13	1	
	AN821-5D			86 - 47	4	
	AN821-6D			71 - 41	1	
	AN821-8D			83 - 12	2	
	AN822-10			59 - 61	2	
	AN822-10D			43 - 1	10	
	AN822-4			40 - 31	4	
	AN822-4B			59 - 78	2	
	AN822-4D			21 - 28	29	
	AN822-5D			86 - 78	5	
	AN822-6			40 - 8	9	
	AN822-6-2D			80 - 23	1	
	AN822-6D			71 - 22	9	
	AN822-8			40 - 3	8	
	AN822-8D			40 - 51	10	
	AN823-10			57 - 33	3	
	AN823-10D			44 - 19	4	
	AN823-4			28 - 20	8	
	AN823-4D			44 - 16	17	
	AN823-5D			86 - 77	3	
	AN823-6			40 - 18	1	
	AN823-6D			71 - 37	10	
	AN823-8			40 - 25	4	
	AN823-8D			71 -143	2	
	AN824-10D			43 - 3	12	
	AN824-4D			77 - 4	3	
	AN824-5D			86 - 45	2	
	AN824-6			85 - 11	2	
	AN824-6D			71 - 61	1	
	AN824-8D			71 -128	1	
	AN825-10D			44 - 7	1	
	AN825-4D			28 - 8	7	
	AN825-5D			86 - 39	6	
	AN826-4			46 - 28	4	
	AN826-4D			45 - 4	4	
	AN826-5D			86 - 43	1	
	AN826-6D			80 - 21	2	
	AN827-10D			44 - 21	1	
	AN827-5D			86 - 48	1	
	AN832-10			59 - 55	2	
	AN832-10D			84 - 8	3	
	AN832-4D			21 - 14	16	
	AN832-5D			86 - 83	2	
	AN832-6D			44 - 28	3	
	AN832-8			40 - 37	1	
	AN832-8D			71 -108	4	
	AN833-10D			43 - 15	5	
	AN833-4D			46 - 6	10	
	AN833-5D			86 - 46	2	
	AN833-40			21 - 12	4	
	AN833-8			40 - 34	1	
	AN834-5D			86 - 50	3	
	AN837-10D			43 - 6	5	
	AN837-4D			21 - 19	19	

STOCK NUMBER	PART NUMBER	SOURCE CODE		FIGURE AND INDEX NO.	QTY. PER ARTICLE	MICRO-FILM INDEX
	AN837-8D			83 - 38	4	
	AN840-10D			42	3	
	AN840-12D			33 - 66	1	
	AN840-16			55 - 41	4	
	AN840-16D			55 - 32	6	
	AN840-4			71 -152	1	
	AN840-4D			48 - 8	6	
	AN840-8			57 - 74	1	
	AN840-8D			57 - 71	1	
	AN842-10			42 - 6	4	
	AN842-10D			59 - 38	1	
	AN842-16D			55 - 11	8	
	AN842-4D			55 - 21	7	
	AN842-8D			55 - 69	3	
	AN844-10			42 - 5	2	
	AN844-10D			42 - 1	2	
	AN844-12-12			33 - 67	5	
	AN844-12-15			33	1	
	AN844-12D			33 - 65	3	
	AN844-16D			40 - 47	12	
	AN844-4-11			71 -151	1	
	AN844-4D			46 - 36	4	
	AN844-8D			57 - 75	2	
	AN847-16D			55 - 43	6	
	AN884-12-12			33 - 62	2	
	AN894-6-4			80	1	
	AN894D12-10			84 - 19	2	
	AN895-64			55 - 49	2	
	AN895B100			48 - 43	1	
	AN895B70			75 - 21	2	
	AN895B70			76 - 14	2	
	AN900-10			96 - 43	2	
	AN900-16			58 - 33	6	
	AN902-10			43 - 19	9	
	AN902-3			22 - 3	2	
	AN902-4			21 - 29	9	
	AN902-8			21 - 27	5	
	AN902B10			84 - 18	8	
	AN902B20			84 - 12	1	
	AN910-1D			77 - 8	1	
	AN910-2D			71 - 21	1	
	AN910-3D			55 - 70	2	
	AN911-1D			83 - 4	2	
	AN911-2D			71 - 20	1	
	AN911-3			55 - 71	3	
	AN911-6			40 - 55	2	
	AN912-1			40 - 30	8	
	AN912-13D			55 - 2	2	
	AN912-2			40 - 13	2	
	AN912-3D			71 -148	1	
	AN912-4D			40 - 50	2	
	AN912-7			40 - 49	6	
	AN912-8			59	5	
	AN913-1			25 - 13	3	
	AN913-1D			81 - 25	4	
	AN913-2			86 - 2	5	
	AN913-3			58 - 23	2	
	AN913-3D			71 - 17	3	
	AN913-6			40 - 54	2	
	AN914-1D			71 - 9	5	
	AN914-4			59 - 64	2	
	AN914-4D			44 - 1	1	
	AN914-6D			40 - 48	2	
	AN915-2D			71 - 49	1	
	AN917-3D			55 - 58	5	
	AN917-6D			40 - 53	4	
	AN919-12D			80	1	
	AN919-13D			43 - 10	2	
	AN919-14			85 - 4	4	
	AN919-15D			59 - 24	4	
	AN919-25D			84 - 11	4	
	AN924-10D			44 - 14	15	
	AN924-4D			21	40	
	AN924-5D			86	7	
	AN924-6D			44 - 29	3	
	AN924-8D			21	12	
	AN926-10D			43 - 9	1	
	AN926-8D			71 - 3	2	
	AN926A6B			97	16	
	AN927-4D			48 - 33	1	
	AN929-10			43 - 4	2	
	AN931-10-14			46 - 49	4	
	AN931-12-17			60 - 16	2	
	AN931-16-22			11 - 12	7	
	AN931-2D			80 - 12	1	
	AN931-4-12			99	2	
	AN931-4-7			13 - 45	2	
	AN931-5-9			96 - 27	2	
	AN931-6-10			56 - 16	2	
	AN931-7-11			21 - 54	2	
	AN931-8-13			60 - 2	6	
	AN932-2			58 - 21	AR	
	AN932C2			49 - 31	AR	
	AN935-10			38	23	
	AN935-10L			71	4	

STOCK NUMBER	PART NUMBER	SOURCE CODE		FIGURE AND INDEX NO.	QTY. PER ARTICLE	MICRO-FILM INDEX
	AN935-4			24	2	
	AN935-416			69	11	
	AN935-6			33	12	
	AN935-8			41	46	
	AN936-138			94	5	
	AN936A10			45	3	
	AN936A3			64	1	
	AN936A4			54	4	
	AN936A6			54	14	
	AN936A6B			92	169	
	AN936A8			98	18	
	AN936B10			6	6	
	AN936D8			54	1	
	AN938-10			85 - 3	2	
	AN938-10D			43	4	
	AN939D4			49 - 21	1	
	AN940-316			41	4	
	AN940-416			41	4	
	AN944-101A			23 - 38	2	
	AN944-301			23 - 39	4	
	AN950-516			30	1	
	AN960-10			4	AR	
	AN960-10L			4	234	
	AN960-1216			40 - 36	2	
	AN960-3			5	6	
	AN960-4			10	74	
	AN960-416			8	532	
	AN960-416L			9	81	
	AN960-516			16	71	
	AN960-516L			24	10	
	AN960-6			3	611	
	AN960-6L			102	24	
	AN960-616			17	47	
	AN960-616L			64	2	
	AN960-716			21	44	
	AN960-716L			27	1	
	AN960-8			4	AR	
	AN960-8L			21	60	
	AN960-816			23	10	
	AN960-816L			34	2	
	AN960-916			21	2	
	AN960A10			32	6	
	AN960A1216			83	8	
	AN960A1416			59	10	
	AN960A416			67	6	
	AN960A716			21	63	
	AN960A716L			48	1	
	AN960A8L			82	20	
	AN960B416			99	4	
	AN960B8			99	30	
	AN960C10L			90	10	
	AN960C516			34	54	
	AN960C6			90	4	
	AN960D10L			4	1	
	AN960D12			13	16	
	AN960D1216			84	4	
	AN960D1416			43 - 22	15	
	AN960D6			79	12	
	AN960D716			71	1	
	AN960D716L			49	1	
	AN960D8			79	4	
	AN960D816			86	7	
	AN960D916			44	2	
	AN960PD616			10 - 11	3	
	AN961-6			92	199	
	AN970-3			10	AR	
	AN970-4			71	8	
	AN975-3			24	16	
	AN975-6			67	14	
	AV-1B1100			59 - 72	2	
	A11099			90 - 7	2	
	A16396			90 - 15	1	
	A16397			90 - 17	2	
	A16402			90 - 16	1	
	A1788-82-3			104	1	
	A24976			96 - 34	2	
	A3122-12-59			93 - 5	2	
	A4-30			92	1	
	A539			51 - 40	4	
	A6K75			89 - 3	24	
	A60024			90 - 10	2	
	A7979			49 - 23	1	
	B-4751			86 - 96	2	
	B-4751-1			81 - 9	10	
	B-4752			106 - 16	1	
	B-4754			78 - 32	2	
	B-4756			78 - 30	27	
	B-4757			78 - 31	5	
	B-4780-1			79 - 31	2	
	B-4785-1			78 - 28	4	
	B-4880			78 - 33	2	
	B-7			94 -120	1	
	B-88			38 - 9	4	
	BB-128			61 - 11	6	
	BC-10338			97	1	

STOCK NUMBER	PART NUMBER	SOURCE CODE		FIGURE AND INDEX NO.	QTY. PER ARTICLE	MICRO-FILM INDEX
	BC-1333			97	1	
	BK-22-K			97 -172	1	
	BZ-RQ41			23 - 16	2	
	B111745			13 - 47	2	
	B13804			90 - 3	2	
	B15839-27			90 - 20	2	
	B16398			90 - 13	1	
	B16640			90 - 14	1	
	B169491			90 - 11	2	
	B17232			90 - 8	1	
	B17233			90 - 9	1	
	B181000-1			19 - 1	2	
	B18120-11			18 - 1	1	
	B18120-600			17 -	1	
	B18120-601			18 -	1	
	B18120L			17 - 1	1	
	B4788			69 - 22	2	
	C-4A			94 - 80	2	
	C-404A/A			98 - 5	1	
	C-404/A			98	1	
	C-411/A			98 - 7	1	
	C-570A/A			98 - 1	1	
	CA-2137			48 - 57	2	
	CD-365			97 - 13	1	
	CD-365A			97	1	
	CL01-90CDB-1			99	1	
	CL01-90CDC-1			99	1	
	CP53B1EC105K			96 - 25	2	
	CP54B1-EE504V			94 - 96	1	
	CS866			52 - 8	4	
	CU-65/ARN-6			97 -195	4	
	CX3554			97	1	
	C4/ARN-7			106 - 9	1	
	D-3			41 - 3	2	
	DM-32-A			97 - 49	1	
	DT-2R-A7			21 - 46	10	
	DY-21/ARC-3			97 -108	1	
	DY-22/ARC-3			97 -109	1	
	D14495			90 - 4	2	
	D15602			90 - 18	1	
	D15834			90 - 1	1	
	D16716-3			90 - 19	2	
	D177954			27 - 16	14	
	D3-180-M			30 - 43	2	
	D4			9 - 36	1	
	E-1002-13-20			94 -168	1	
	EA-102AN-10			81 - 54	1	
	E1013			91 - 3	1	
	FBA-12			33 - 63	6	
	FL-30			98 - 49	2	
	FSC 5945-542-9596			95 - 12	1	
	FT-161*			97	1	
	FT-213-A			97 - 5	1	
	FT-224-A			97 -158	1	
	FT-231			97 - 46	1	
	FT-233A			97 - 47	1	
	FT224-A			106 - 1	1	
	G-106337			10 - 8	1	
	G-7740-24			94 -195	1	
	GA-641-4			57 - 44	2	
	GE21F483			92	1	
	GE26F558G3			92 - 26	1	
	GK-C-8-32SL			18 - 44	1	
	GK-CL-1/2BN			17	2	
	GK-C8-21C-5/8			94 - 16	2	
	GK-C8-32SL			17 - 34	1	
	H-33A			97	2	
	HM-4			99 - 32	1	
	HS-33			97	5	
	HS-33A			97 -128	3	
	IL-5/U			97 -220	2	
	IL-5U			97 -190	1	
	IP-B-6			54 - 49	1	
	IS13820			75 - 1	1	
1AHC-1560-166-4637	I180361-4			4 - 33	1	A261
	I180481			88 -	1	E 13
	I180481-1			88 - 8	2	
	I180481-2			88 - 10	2	
	I180481-4			88 - 9	2	
	I180482			88	1	
	I180482-2			88 - 17	2	
	I180482-3			88 - 18	2	
	I180482-4			88 - 14	2	
	I180482-6			88 - 15	2	
1AHC-1560-121-3302	I180483L			88 - 7	1	
1AHC-1560-121-3303	I180483R			88 - 5	1	
1AHC-1560-121-3304	I180484L			88 - 6	1	
1AHC-1560-121-3305	I180484R			88 - 4	1	
	I181000			17	1	
	I181000-2			17 - 39	1	A263
1AHC-1560-532-9470	I181000-4			17 - 40	1	A264
	I181000-5			17 - 42	1	A265
1AHC-1560-532-9472	I181000-6			17 - 45	1	A266
1AHC-1560-347-3223	I181172			17 - 41	1	A268

STOCK NUMBER	PART NUMBER	SOURCE CODE		FIGURE AND INDEX NO.	QTY. PER ARTICLE	MICRO-FILM INDEX
1AHC-1560-310-1035	I189661			48 - 4	2	A 89
1AHC-1560-532-9475	I189666			50 - 16	1	A269
1AHC-1560-097-3786	I189667			71	2	
1AHC-1560-327-1133	I189668			50	2	A270
	I189669			50 - 52	1	A271
1AHC-1560-532-9476	I189673			50 - 12	2	A272
	I189678			50 - 58	2	
1AHC-1560-448-6285	I189687			48 - 46	4	A275
1AHC-1560-532-9479	I189688			48 - 49	6	A 92
1AHC-1560-532-9481	I189690			48 - 42	2	A 93
1AHC-1560-327-1134	I189694			48 - 54	2	A 95
	I189712			48 - 56	2	A278
	I189712-2			48 - 58	2	
	I189712-3			48 - 57	2	
	I82A			106 - 7	1	
	J-5384-1			33	2	
	J-5385-1			33	4	
	JH20-1*			69 - 18	1	
	JH20-2**			69 - 19	1	
	JH20-5***			69 - 20	1	
	JH3139			71 - 15	1	
	JH4000-1			69 - 17	1	
	JV-1			94 - 61	2	
	JV-20			54 - 47	6	
	J2.5-27.5-D-4-1/8			49	1	
	J68/ARC-3			97 -103	1	
	KP-12-A			74 - 17	4	
	KP-8-A			74 - 23	1	
	KP16A			24 - 56	2	
	KP6A			64 - 10	2	
	K1400-B-4-1*			55 - 8	2	
	K1700B-2			57 - 31	7	
	K3-6			10 - 31	2	
	K4			65 - 9	4	
	K4A			73 - 14	2	
	K6A			10 - 3	3	
	L-71-5			33 - 60	2	
	LP-21-LM			97 -183	1	
	L1148			99 - 44	6	
	L503			10 - 12	1	
	M-275			97 - 85	1	
	M-359			97 - 2	4	
	MC-136			97 -117	2	
	MC-203-A			97 -118	1	
	MC-211-A			97 -112	2	
	MC-215			97 -111	1	
	MC-2711			92 - 51	2	
	MC-277			97 - 84	1	
	MCD7711			21 - 53	2	
	MG-149F			97 - 91	1	
	MG-149H			97	1	
	MS21919D6-18			96 - 8	4	
	MS28741-6-26			85 - 2	2	
	MT-236B/ARC-3			97 -104	1	
	MT-237C/ARC-3			97 - 78	1	
	MT-238C/ARC-3			97 - 75	1	
	MT-556/A1C			97 - 71	2	
	MT-589/ARN-12			97 - 67	1	
	MX-1089U			98 - 3	1	
	MX-273/AR			97 -189	5	
	MX-276/AR			97 -194	3	
	MX-656/AR			97 -191	3	
	M33705			39 - 6	2	
	M4282			67 - 34	4	
	NAF1065F4			106 - 30	1	
	NASP-SK2482			86 - 84	2	
	NAS134-37-0240			63 - 25	1	
	NAS143-4C			8	2	
	NAS143-9			21	2	
	NAS144-13			8 - 4	2	
	NAS148A71			21 - 6	2	
	NAS17-2A			96 - 19	2	
	NAS2-101			22 - 4	2	
	NAS2-101A			30 - 24	2	
	NAS2-201A			22 - 20	2	
	NAS20-6-12			96	2	
	NAS221-19			6 - 8	4	
	NAS302-25-2237			30 - 74	1	
	NAS304-04-0323			61 - 22	2	
	NAS304-34-0723			61 - 8	1	
	NAS304-35-065			61 - 9	1	
	NAS304-37-0133			67 - 40	3	
	NAS304-37-0857			32 - 79	1	
	NAS304-45-3464			63 - 34	2	
	NAS304-55-0441			61 - 24	1	
	NAS304-55-0463			61 - 25	1	
	NAS304-66-0874			65 - 52	1	
	NAS304-77-0221			65 - 44	1	
	NAS304-77-0236			65 - 45	1	
	NAS314-27-0304			27 - 47	2	
	NAS384-4-6			4 - 44	3	
	NAS387-632-6			104 - 37	6	
	NAS387-832-16			54 - 56	1	
	NAS387-832-8			30 - 67	4	

STOCK NUMBER	PART NUMBER	SOURCE CODE		FIGURE AND INDEX NO.	QTY. PER ARTICLE	MICRO-FILM INDEX
	NAS43DD3-24			59	2	
	NAS460-516			16 - 18	2	
	NAS487-040			81	12	
	NAS487-14			81	28	
	NAS50-112			29 - 18	1	
	NAS51-162			22 - 17	2	
	NAS54-56			27 - 40	4	
	NAS54A16			27 - 34	6	
	NAS70R177-375			94	8	
	NO NUMBER			4 - 5	4	
	NO NUMBER			4 - 29	1	
	NO NUMBER			8	54	
	NO NUMBER			9 - 49	4	
	NO NUMBER			17 - 44	1	
	NO NUMBER			18 - 9	24	
	NO NUMBER			21 - 33	2	
	NO NUMBER			30 - 44	1	
	NO NUMBER			31 - 4	1	
	NO NUMBER			32 - 43	1	
	NO NUMBER			32	1	
	NO NUMBER			33 - 45	1	
	NO NUMBER			33	1	
	NO NUMBER			33 - 55	2	
	NO NUMBER			33 - 57	2	
	NO NUMBER			33 - 58	2	
	NO NUMBER			40 - 44	1	
	NO NUMBER			46 - 31	2	
	NO NUMBER			50 - 21	1	
	NO NUMBER			51 - 15	2	
	NO NUMBER			52 -105	2	
	NO NUMBER			53 -116	4	
	NO NUMBER			54 - 6	1	
	NO NUMBER			54 - 46	8	
	NO NUMBER			58 - 18	1	
	NO NUMBER			58	1	
	NO NUMBER			59 - 56	2	
	NO NUMBER			69 - 21	1	
	NO NUMBER			69 - 24	1	
	NO NUMBER			71 -133	1	
	NO NUMBER			79 - 12	1	
	NO NUMBER			81 - 20	2	
	NO NUMBER			82 - 10	1	
	NO NUMBER			86 - 1	3	
	NO NUMBER			88 - 3	350	
	NO NUMBER			88 - 16	152	
	NO NUMBER			91	1	
	NO NUMBER			91	2	
	NO NUMBER			91	2	
	NO NUMBER			91	2	
	NO NUMBER			92 - 66	1	
	NO NUMBER			93 - 9	2	
	NO NUMBER			94 - 1	1	
	NO NUMBER			94 - 40	2	
	NO NUMBER			94 -144	2	
	NO NUMBER			95	2	
	NO NUMBER			97 - 21	1	
	NO NUMBER			97 -178	1	
	NO NUMBER			97 -180	1	
	NO NUMBER			97 -181	2	
	NO NUMBER			97 -184	7	
	NO NUMBER			98	2	
	NO NUMBER			99 - 41	1	
	NO NUMBER			99 -104	1	
	NO NUMBER			106 - 24	1	
	NO NUMBER*			86 - 75	1	
	NO NUMBER*			86 - 99	1	
	PL-112			97 -182	1	
	PL-118			97 -150	2	
	PL-122			97 - 12	1	
	PL-148-A			97 -102	1	
	PL-151-A			97 -101	1	
	PL-152-A			97 - 41	1	
	PL-153-A			97 - 98	2	
	PL-259-A			97 - 1	5	
	PL-259A			97 - 83	1	
	PLM50			52 -112	2	
	P212			104 - 11	1	
	R-122A/ARN-12			97	1	
	R-122/ARN-12			97 - 66	1	
	R-5/ARN-7			97 - 4	1	
	RA2487-2			68 - 8	2	
	RC-20-AE-122-J			98 - 28	12	
	RC-20-AE-822-J			98 - 27	12	
	RC21AE102K			97 - 26	1	
	RC21AE511K			97 - 27	1	
	RC31AE105M			97 - 44	1	
	RC40BE470J			97 - 28	1	
	RD4950***			71 -153	1	
	REB3N			35 - 43	30	
	RW33F250			94 - 8	1	
	RW34F100			94 - 7	1	
	RW36F5RO			94 - 9	1	
	R77A/ARC-3			97 - 77	1	
	R985-AN-148			33 - 1	2	

STOCK NUMBER	PART NUMBER	SOURCE CODE		FIGURE AND INDEX NO.	QTY. PER ARTICLE	MICRO-FILM INDEX
	S-122			72	2	
	S-123			30 - 70	2	
	S-124-16			19 - 17	1	
	S-124-17			12 - 9	1	
	S-124-24			68 - 6	7	
	S-126			56 - 4	8	
	S-126-20			73 - 3	4	
	S-126-20/M/			63 - 36	4	
	S-126-22/M/			63 - 16	4	
	S-126-34			32 - 75	1	
	S-126-36			32	3	
	S-130			24 - 31	1	
	S-139			41 - 24	2	
	S-141			27 - 20	2	
	S-162			58 - 47	48	
	S-165			17 - 50	1	
	S-165/M/			18 - 30	1	
	S-168			10 - 26	3	
	S-177			48 - 59	2	
	S-185-102-010			34 - 24	54	
	S-190-4C-106			56 - 21	16	
	S-197			52 -110	18	
	S-207-6			51 - 62	2	
	S-21-3			67 - 20	2	
	S-220-1			101 - 29	11	
	S-241			41	10	
	S-242			55 - 26	6	
	S-246			59 - 58	4	
	S-27			51 - 42	8	
	S-34-1			21 - 72	4	
	S-34-2			24 - 24	5	
	S-36-1			35 - 13	4	
	S-36-2			35	4	
	S-36-3			35 - 19	16	
	S-36-4			35 - 15	16	
	S-36-6			35 - 14	12	
	S-36-7			35	12	
	S-73-11			38 - 18	3	
	S-73-12			72 - 19	1	
	S-74-15A			67 - 25	6	
	S-80			55 - 35	2	
	SC2611			94 - 34	1	
	SF500-145			54 - 35	1	
	SF506-176			54 - 34	1	
	SIK-5			11 - 7	8	
	SK72-832-8			104 - 35	2	
	SK83-6-3/4			4 - 11	3	
	SK83-6-7/16			4 - 7	3	
	SK83-632-16			104 - 32	4	
	S17377			97 - 29	1	
	S17378			97 - 30	1	
	S54B12994			78 - 37	2	
	T-17			97 -129	10	
	TCB15200-4			59 - 1	2	
	TD805H-3			95 - 12	4	
	T67ARC-3			97 - 74	1	
	U-15/U			97 -100	2	
	U-16/U			97 - 99	1	
	U8241			52 - 60	2	
	UG-21C-U			97 -162	2	
	UG-27B/U			97 -169	2	
	USAF770-A1			77 - 7	1	
	VJR24B-5X			96 - 29	2	
	W1500-5/8			50 - 6	3	
	W1500-5/8D			59 - 35	2	
	Y-127			4 - 16	1	
	Z-36-AA			74 - 26	1	
	0-4600-853			99 - 67	2	
	0147-351			94 -137	3	
	0157			98 - 13	1	
	0161366			99 - 46	1	
	0360B			95 - 8	2	
	066653			52 - 74	4	
	1			64 - 3	1	
	1P-196AB***			71	1	
	10-10377			21 - 51	2	
	100696			101 - 20	5	
	100696-A19-15-014			29 - 3	1	
	100696-D08-05-008			99	3	
	100696-D08-06-018			24 - 21	88	
	100696-D08-06-610			71	1	
	100696-D10-07-116			52 - 6	4	
	100696-D10-07-016			60 - 15	4	
	100696-D10-07-028			71	2	
	100696-D10-08-018			49	18	
	100696-D10-08-020			104 - 10	4	

STOCK NUMBER	PART NUMBER	SOURCE CODE		FIGURE AND INDEX NO.	QTY. PER ARTICLE	MICRO-FILM INDEX
	100696-D12-06-008			42 - 31	2	
	100696-D12-06-016			42 - 30	4	
	100696-D12-06-024			97 -138	4	
	100696-D12-07-006			86	2	
	100696-D12-07-007			47 - 10	3	
	100696-D12-07-012			86	1	
	100696-D12-07-014			47 - 9	2	
	100696-D16-06-012			83 - 41	4	
	100696-D16-06-024			83 - 45	8	
	100696-D16-08-012			97	4	
	100696-D22-11-004			35 - 6	8	
	100696-D25-21-127			103 - 18	2	
	100696-D8-06-018			94	1	
	100696-S08-05-009			98 - 40	1	
	100696-S08-05-014			98	1	
	100696-S08-05-019			98	1	
	100696-S08-05-024			98	1	
	100696-S08-06-004			98 - 26	4	
	100696-S08-06-006			106 - 14	4	
	100696-S10-08016			63 - 5	6	
	100696-S11-09-008			27 - 41	8	
	100696-S12-8-011			9 - 70	4	
	100696-S32-29-016			27 - 28	2	
	100696-X13-09-016			92 - 82	4	
	100696-008-05-018			101 - 45	3	
	100696-008-06-018			52 - 12	8	
	100801-D3-0562			48 - 48	5	
	100801-X2-0125			20 - 7	2	
	100801-X3-0812			41 - 10	2	
	100801-X5-0785			35 - 5	4	
	100801-X5-1500			34 - 9	2	
	100801-X6-0094			63 - 4	10	
	100801-X6-0185			30 - 18	5	
	100801-Y3-1187			9 - 84	2	
	100942-010-006-316-84			52 - 96	2	
	100942-010-006-033-17			64 - 22	1	
	100942-063-014-216-40			27 - 61	2	
	100943-032-014-200-6			99 - 24	1	
	100943-040-008-024-8			51 - 10	2	
	100943-063-017-104-4			30 - 28	2	
	100943-091-017-024-4			34 - 10	2	
	100951-A-.064-007-024			71 - 68	2	
	100951-DD-187-017-108			104 - 33	1	
	100951-L064-008-112			99 - 89	8	
	100951-R-187-012-108			4 - 14	1	
	100951-S-032-008-016			65	2	
	100951-S-032-008100			17	4	
	100951-S-032-014-025			27 - 60	1	
	100951-S-032-014-100			27 - 59	1	
	100951-S-032-029-108			27 - 27	10	
	100951-S-063-008-030			48	4	
	100951-S-063-009-020			63	2	
	100951-S031-016-100			48	6	
	100951-S063-007-012			38	36	
	100951-S063-008-030			49	7	
	100951-X-020-108-116			25 - 8	1	
	100951-X-031-023-100			6 - 9	2	
	100951-X-063-008-024			67 - 21	2	
	100951-X-063-009-020			63	6	
	100951-X063-016-020			30 - 29	2	
	100951-X063-017-100			30 - 39	4	
	101321-00-0193-0172			52 - 30	8	
	101637-028-08			3 - 5	2	
	102361-01300			82 - 13	2	
	102809-A-128-018			52 - 75	4	
	102809-A078-012			9	6	
	102809-A078-014			62	2	
	102809-A093-017			29 - 22	1	
	102809-A125-011			30 - 33	2	
	102809-A125-020			3 - 42	1	
	102809-A125-022			30 - 34	1	
	102809-A125-026			10 - 21	4	
	102809-062-012			3 - 28	2	
	102809-125-020			64 - 2	1	
	102809-125-024			103 - 9	2	
	102809-125-030			4 - 13	2	
	102933-D6-0500-0437			84	4	
	102933-P4-0438-2375			83 - 16	2	
	102933-S4-0250-0081			41 - 5	4	
	103053			33 - 51	AR	
	103191A-040-024			75 - 24	2	
	103636-1-1000			58 - 57	2	
	103902			75 - 11	1	A 75
	103903			75 - 12	2	A 76
	103990-07-0810			77 - 46	2	
	104036-1-0010-0608			49 - 34	2	
	104036-2-0010-3000			49 - 35	2	
	104036-2-0104-0408			49 - 36	1	
	104036-2-0108-0612			55	2	
	104129			75 - 9	1	A 1
1AHC-1560-212-5882	104156			75 - 22	1	A 2
	104158			75 - 10	1	A 3
	1042-17A			95 - 6	2	
	104662L			13 - 8	1	
	104662R			13	1	
1AHC-1560-536-6368	105019			51 - 19	2	A 4
	105020			51 - 17	2	A 5
	105090-A-032-2-100			99	8	
	105090-040-2-028			106 - 13	8	
	105212			35 - 31	4	
	105350			35 - 3	8	
	105351			35 - 60	4	
	105352			35 - 59	4	
	105714-S-1-6			52 - 77	12	
	105739-S0250-0312-0500			63	6	
	105739-X0186-025-0234			102 - 14	8	
	105739-X0194-0252-0105			103 - 12	4	
	105739-X0391-0500-0937			52 - 82	2	
	105740-X0193-0251-0510			27 - 37	12	
	105774-C-063-00228			57 - 47	1	
	105774-C-063-00300			13 - 44	2	
	105774-C-063-00304			13 - 14	4	
	105774-C-063-00400			13 - 28	5	
	105774-C-063-00428			18 - 12	1	

STOCK NUMBER	PART NUMBER	SOURCE CODE		FIGURE AND INDEX NO.	QTY. PER ARTICLE	MICRO-FILM INDEX
	105774-C-063-00503			17 - 24	1	
	105774-C-063-00700			13 - 30	4	
	105774-C-063-01127			17 - 17	2	
	105774-C-063-01200			17 - 19	2	
	105774-C-063-02008			3 - 34	1	
	105774-C-085-03100			19 - 8	1	
	105774-C-085-03600			13 - 11	2	
	105774-C-085-05600			10 - 29	2	
	105774-C-090-00412			2	2	
	105798-10			36 - 45	4	
	105798-12			87 - 3	14	
	105798-14			36 - 5	4	
	105798-17			36 - 6	6	
	105798-18			36 - 8	4	
	105798-21			36 - 7	4	
	105933-12			33 - 73	2	
	105933-5			96 - 11	4	
	105933-6			56 - 13	2	
	105933-8			60 - 3	14	
	105947			33 - 33	6	
	105982-3A-10-012			77 - 45	2	
	105982-3A-45-104			86 - 6	6	
	105982-4A-15-004			100 - 48	1	
	105982-4A-22-100			92 - 81	4	
	106043-S-8-04-200			87 - 19	2	
	106043-S12-08-500			104 - 20	1	
	106043-0804-080			58 -122	2	
	106043S-08-04-180			51 - 54	2	
	106043S-08-04-020			51	12	
	106043S12-06-270			93 - 4	2	
	106119			15 - 2	16	
	106120			15 - 8	6	
	106200FR-16-12			55 - 53	4	
	106200FR-16-15			55 - 14	4	
	106200FR-16-19			55 - 33	2	
	106200FR-4-15			46 - 37	4	
	106200FR-8-12			55 - 60	8	
	106200H-10-11			42 - 7	24	
	106200H-10-15			42 - 3	10	
	106200H-10-26			44 - 3	1	
	106200H-16-12			55 - 29	20	
	106200H-16-13			55 - 7	4	
	106200H-16-15			55 - 4	2	
	106200H-16-17			55 - 10	2	
	106200H-16-26			40 - 52	2	
	106200H-32-12			57 - 78	1	
	106200H-32-15			57 - 40	1	
	106200H-4-12			55 - 18	9	
	106200H-4-15			46 - 41	12	
	106200H-8-15			55 - 67	11	
	106200H-8-22			57 - 72	1	
	106200H-8-4			71 -139	1	
	106200H-8-52			57 - 76	1	
	106200H-8-9			42 - 20	2	
	106201-R-43002			64 - 35	1	
	106201-R-44300			64 - 36	1	
	106203-00100			27 - 69	1	
	106238			30 - 73	2	
	106242-1A-00200			96	4	
	106242-7-00700			28 - 15	1	
	106242-8-03200			96	2	
	106242-9-01604			28 - 18	1	
	106242-9-02404			28 - 10	1	
	106333			87 - 45	1	A 6
	106561			73 - 8	2	A 7
	1071			94 - 45	1	
	107464			35 - 17	30	
	107486			28 - 2	1	A 8
	107496			99 - 23	2	A 9
	107941-L22315			32 - 65	1	
	108059			58 - 6	4	
	108492-A1416-116			59	4	
	108492-S-10-016			17	4	
	108493-832			101	4	
	109615-2-040			57 - 45	1	
	109615-2-080			58 - 11	4	
	109615-4-080			48 - 58	2	
	109629			20 - 8	2	H 58
	109638			55 - 59	4	H 62
	109639			55 - 52	4	H 63
	109640			55 - 57	4	H 64
	109644-043-4A			87 - 25	2	
	109644-116-5A			87 - 4	2	
	109645-034-5A			87 - 33	2	
	109645-039-1-A			94 -185	2	
	109664-118-5A			87 - 20	2	
	11.00 X 12			21	2	
	11-1039-1-3D			48 - 25	6	
1AHC-1560-193-4751	11-270-9-1			88 - 13	2	
	110-1/4			94 - 74	2	
	110207			24 - 69	6	
	1111-517704			43 - 17	2	
	111187			91	2	H125
	111191-024-08			99 - 13	1	
	111191-030-08			99 - 15	1	
	111192-024-08			99 - 14	1	
	111192-030-08			99 - 16	1	
	111200-10			23 - 20	2	
	111290-20			23 - 21	2	
	111504-010-016-0024-22			29 - 7	1	
	111504-029-013-0024-8			87	8	
	111513-02003			97 -199	1	
	111730			87 - 17	2	
	111745			99 - 40	1	J207
	112132-1-4			94 - 88	1	
	112132-5-8			94 - 87	1	
	112132-9-12			94 - 86	1	
	112136-10			28 - 1	1	
	112464-2			81	2	
	112464-4			81 - 6	2	
	113209-2			81 - 8	2	
	113209-4			79 - 39	4	
	113638**			69	1	H276
	114212*			69	1	H323
	114213***			69	1	H324
	114698-125-00020			74 - 12	2	
	114698-187-00102			74 - 11	2	
	114941			23 - 22	2	H448
	115043			91 - 2	17	J262
	115099-8-202			33 - 87	2	
	11749			93 - 1	2	
	11751			93 - 17	2	
	118024			92 - 15	1	
	118024-1			92	1	
	12			94 - 11	2	
	12-270-8-1L			88 - 1	1	
	12-270-8-2R			88 - 2	1	
	128-048			8	2	
	1274			52 - 59	2	
	13X-13261			99 - 65	1	
	13210			24 - 65	1	
	138143			81 - 32	2	
	138143E			81 - 33	1	
	14.50			30 - 45	2	
	14942			24 - 67	1	
	1503F-1503			104 - 31	1	
	15142			24 - 68	1	
	15191			24 - 70	1	
	160			94 - 30	1	
	1608A			104 - 6	1	
	173-62			55	2	
	18			94 - 12	2	
	18R9714			57 - 14	1	A280
	18R9715			57 - 10	1	A281
1AHC-1560-122-4441	18S5850P-16			33 - 36	1	
1AHC-1560-122-4440	18S5850P-17			33 - 37	1	
	18S5850P-18			33	1	
1AHC-1560-122-2099	18S5850P-19			33	1	
	18S5850P-21			33 - 38	2	
1AHC-1560-181-0232	18S5853			33 - 80	2	
	18S5906			35 - 11	4	
1AHC-1560-121-8013	18S5918			33 - 11	18	A283
1AHC-1560-109-6198	18S5921-1			35 - 9	4	
1AHC-1560-109-6197	18S5921-2			35 - 10	14	
1AHC-1560-181-0233	18S5937			35 - 7	20	A116
1AHC-1560-166-2013	18S5967			51 - 27	2	A285
1AHC-1560-109-3914	18S5968			51 - 30	2	A118
	18S5972			35	4	A544
	18S5973			35	4	A545
	18S5974			35	4	
	18S5975			35	2	
	18S5985			35 - 34	4	
	18S5986			35 - 24	2	
	18S5987			35 - 37	4	
	18S5988			35	8	
1AHC-1560-109-6200	18S9021			41 - 25	2	
1AHC-1560-181-0240	18S9022-1L			41 - 20	1	

STOCK NUMBER	PART NUMBER	SOURCE CODE		FIGURE AND INDEX NO.	QTY. PER ARTICLE	MICRO-FILM INDEX
1AHC-1560-181-0239	18S9022-1R			41	1	
1AHC-1560-122-7920	18S9022-5			41 - 12	2	
1AHC-1560-122-7921	18S9022-6			41 - 22	2	
1AHC-1560-122-9846	18S9022-8			41 - 7	2	
1AHC-1560-122-9847	18S9031			41 - 6	2	
1AHC-1560-125-1219	18S9034			41 - 4	4	
1AHC-1560-117-5522	18S9100			33 - 4	2	E 19
1AHC-1560-040-6396	18S9100-29			33	2	
1AHC-1560-122-7924	18S9132-1			38 - 25	2	
1AHC-1560-122-7925	18S9132-2			38 - 24	2	
1AHC-1560-122-1364	18S9150			33 - 42	2	C179
	18S9150-2			38	2	
	18S9150-4			33	2	
	18S9150-6			38	2	
1AHC-1560-122-1365	18S9151			38 - 1	2	
1AHC-1560-040-6397	18S9151-2			38	2	
1AHC-1560-122-1366	18S9152			38 - 2	2	C180
1AHC-1560-122-1367	18S9152-1			38 - 3	2	
	18S9152-2			38 - 7	2	
	18S9152-3			38 - 8	2	
1AHC-1560-448-6315	18S9154			38	2	C182
1AHC-1560-568-6878	18S9154-1			38 - 12	2	
1AHC-1560-448-3411	18S9155			38 - 14	2	A122
1AHC-1560-122-1363	18S9156A			38 - 17	2	A549
	18S9161			38 - 21	2	A289
1AHC-1560-180-9434	18S9162			38 - 19	2	A551
1AHC-1560-090-5208	18S9163			38 - 36	4	A290
	18S9164			38 - 16	4	A123
1AHC-1560-166-4564	18S9181			33 - 52	2	C183
1AHC-1560-123-2417	18S9182			33 - 49	2	A291
	18S9183-1			33 - 50	4	
	18S9184			33 - 48	4	A293
	18S9185			51 - 57	2	B310
	18S9186			33 - 53	2	A124
1AHC-1560-123-2424	18S9200L-1			34 - 14	1	
1AHC-1560-123-2428	18S9200L-26			34 - 20	1	
	18S9200L-28			34	2	
1AHC-1560-123-2432	18S9200L-3			34 - 17	1	
1AHC-1560-123-2420	18S9200L-500			33 - 32	1	
1AHC-1560-123-2425	18S9200L-7			34 - 18	1	
1AHC-1560-123-2434	18S9200L-9			34 - 19	1	
1AHC-1560-123-2423	18S9200R-1			34	1	
1AHC-1560-123-2429	18S9200R-11			34	1	
1AHC-1560-123-2430	18S9200R-27			34 - 16	1	
	18S9200R-32			34	2	
1AHC-1560-123-2431	18S9200R-4			34	1	
1AHC-1560-123-2419	18S9200R-500			33	1	
1AHC-1560-123-2426	18S9200R-7			34	1	
1AHC-1560-180-9437	18S9204			34 - 23	18	A294
1AHC-1560-123-7925	18S9209			34 - 15	2	C184
1AHC-1560-123-2435	18S9212-5			34 - 7	2	
	18S9213			33	2	C185
1AHC-1560-304-2443	18S9213-8L			33 - 30	2	
	18S9213-8R			33	2	
	18S9322			46 - 44	2	
1AHC-1560-109-6201	18S936P			51 - 67	2	
	18S9502P-1			14 - 4	2	
	18S9502P-2			14 - 8	2	
1AHC-1560-040-6403	18S9502P-3			14 - 12	2	
1AHC-1560-125-4409	18S9509P			14 - 33	1	
1AHC-1560-121-8875	18S9518			14 - 19	3	
1AHC-1560-099-2397	18S9532L			14 - 14	2	A297
1AHC-1560-099-1098	18S9532R			14	2	A297
1AHC-1560-109-6205	18S9741P			55 - 23	2	
1AHC-1560-121-9205	18S9753			55 - 36	4	
1AHC-1560-130-0681	18S9863			13 - 62	1	
1AHC-1560-130-0682	18S9863-1			13	1	
1AHC-1560-122-2538	18S992			55 - 39	2	A127
	180009			33	2	A 11
	180061-1			51 - 4	1	
	180061-2			51	1	
	180090			100 - 16	1	A 17
1AHC-1560-123-4336	180091			100 - 49	1	A 18
	180100			52 - 17	2	
1AHC-1560-118-0166	180451-1			11 - 1	2	
	180451-2			11 - 2	2	
	180634P			97 -126	4	A 21
	180648P			99 - 60	1	A 22
	180654D			99 - 58	2	
	180806P			97 -202	1	
	180960			92	1	C188
	180966			92	1	
	180967			92 - 3	1	A 31
	180968			92 - 1	1	A301
1AHC-1560-123-2914	181105			13 - 35	4	A 33
1AHC-1560-386-4303	181107			58 -113	2	A 34
1AHC-1560-386-4304	181108			58	2	A303
	181109			58 -102	2	A304
	181109PL			13 - 3	1	
	181109PR			13	1	
	181110			58 -110	2	A 35
1AHC-1560-121-5470	181110P			13 - 4	2	
	181111			58 -107	2	A305
1AHC-1560-180-9470	181124			13 - 39	1	A562
1AHC-1560-180-9469	181127			13	1	A565

STOCK NUMBER	PART NUMBER	SOURCE CODE		FIGURE AND INDEX NO.	QTY. PER ARTICLE	MICRO-FILM INDEX
1AHC-1560-122-9091	181131L			14 - 31	1	A306
1AHC-1560-122-9090	181131R			14	1	A306
	181149			13 - 10	1	C190
	181149-1			13	1	
	181156L			13 - 22	1	B 4
	181156R			13	1	B 4
	181157L			13 - 15	1	A 42
	181157R			13	1	A 42
	181159			13 - 13	4	B 6
	181164			13 - 18	1	C191
	181164-1			13	1	
	181169			13 - 25	4	A310
1AHC-1560-109-9105	181175U			13 - 27	4	B 9
	181178			13 - 33	2	
	181185UL			13	1	E 24
	181185UR			13	1	E 24
1AHC-1560-347-3224	18120-76			17 - 10	2	
1AHC-1560-117-9987	181217			17 - 21	1	
1AHC-1560-180-9464	181218			17 - 20	1	B 12
1AHC-1560-166-4636	18122			19 - 2	2	A 49
	181250			17	2	C193
1AHC-1560-180-9463	181252			17 - 16	2	B 37
	181260			17	2	C195
	181262			18 - 19	1	B 15
1AHC-1560-180-9461	181262L			17 - 18	1	B 15
	181270			17	1	B 16
1AHC-1560-348-8230	181272			17 - 23	1	A324
	181280			17	2	B 18
	181280-1			18 - 17	1	
1AHC-1560-326-2463	181280-4			17 - 14	1	
	181299			19 - 9	1	E 27
	181299-1			19	1	
1AHC-1560-029-0983	18130L			19	1	
1AHC-1560-029-0984	18130R			19	1	
1AHC-1560-180-9458	181304			19 - 26	1	
	181308-1			19 - 11	2	
	181308-2			19 - 12	2	
	181308-3			19 - 13	2	
	181308-4			19 - 14	2	
	181308-6			19 - 15	4	
1AHC-1560-117-3046	181313			19 - 7	1	F 44
1AHC-1560-123-0524	181318			52 - 80	2	A 56
	181323			19 - 28	1	
1AHC-1560-524-2025	181350-4			19 -	1	
1AHC-1560-524-2026	181350-5			19	1	
	181352			19 - 5	2	A352
	18150			17 - 7	1	E 37
	18150-25			18 - 7	1	
	18160L			20 - 2	1	E 38
1AHC-1560-029-1001	18160R			20	1	E 38
1AHC-1560-117-8238	18162-1L			13 - 51	1	B 71
1AHC-1560-117-8239	18162-1R			13	1	B 71
1AHC-1560-117-8241	18162-2L			13 - 53	1	C219
1AHC-1560-117-5579	18162-2R			13	1	C219
	18162-3			17	2	B 74
1AHC-1560-125-4454	181620			13 - 52	6	
1AHC-1560-180-9483	181650			20 -	1	
1AHC-1560-448-6323	181650-1			20	1	
1AHC-1560-125-1287	181651			20 - 9	AR	
1AHC-1560-117-9986	181657			20 - 3	1	C220
1AHC-1560-117-9985	181657-1			20	1	
	181658			20 - 5	2	A101
1AHC-1560-241-1922	181659			20	2	A392
	181786			17 - 51	4	A128
	182020			100 - 47	1	A407
	18206			17 - 2	2	A132
	18206-1			18 - 2	2	
	18206-2			17 - 3	4	A133
	18207-1			17 - 4	3	
	18207-2			17 - 6	3	A135
	18207-3			17 - 5	6	A136
	18265			13	2	E 55
	182651			13 - 48	2	
	183012			104 - 28	1	C225
1AHC-1560-125-3195	183072			51 - 6	2	A141
1AHC-1560-122-8856	183076			51 - 7	2	
1AHC-1560-122-8857	183077			51 - 11	2	A414
1AHC-1560-122-8858	183078			51 - 9	2	
	183080			52 - 10	1	B 80
	183081			52 - 13	2	B 81
1AHC-1560-122-8859	183084			51 - 12	2	A416
	183091			51 - 8	2	A143
1AHC-1560-123-2513	183092			51 - 18	2	A417
1AHC-1560-122-8861	183108			101 - 23	1	C226
1AHC-1560-122-9764	183109			101 - 14	1	E 57
	183111			101 - 4	4	A418
	183112			101 - 27	1	A144
	183121-2			100 - 27	2	
	183123P			99 - 95	4	
1AHC-1560-327-1142	183124			100 - 21	1	F174
	183126			100 - 30	2	A146
1AHC-1560-304-2448	183127			100 - 35	2	A147
	183131			100 - 51	2	A148
	183139L			100 - 53	1	A149
	183141L			100 - 58	1	A423

STOCK NUMBER	PART NUMBER	SOURCE CODE		FIGURE AND INDEX NO.	QTY. PER ARTICLE	MICRO-FILM INDEX
	183144L			100 - 56	1	A151
	183145P			100 - 37	1	A152
	183149			100 - 41	2	A424
	183157			101 - 16	2	A425
	183158			101 - 17	2	A153
	183159			101 - 18	2	A154
1AHC-1560-029-1010	18316			24 - 26	1	C227
1AHC-1560-532-6365	183160			101 - 33	1	A155
1AHC-1560-122-9763	183209			104 - 7	2	A427
	18321-1			100 - 60	2	
1AHC-1560-122-9762	183295			99 -124	2	E 58
1AHC-1560-122-8140	183309			103 - 3	2	B 82
	183364			99 - 49	9	A159
	183731			99 - 72	4	F166
	183809			19 - 32	AR	A160
	183847P			52 - 39	4	A161
1AHC-1560-122-9401	183852-1			52 - 44	4	A162
1AHC-1560-125-3187	183852-2			52 - 43	4	A163
	183852-3			52 - 45	4	A164
1AHC-1560-122-9402	183852-4			52 - 47	2	A429
1AHC-1560-150-8959	183854			52	2	A430
1AHC-1560-125-0942	183857-1			52	2	
1AHC-1560-112-9779	183857-2			52	2	A432
	183857-3			52 - 52	4	
	183857-4			52 - 55	2	
	183857-5			52 - 56	4	
	183868-1			52 - 37	4	
	183868-2			52 - 38	8	
	183883			52 - 19	2	A433
	183883-1			52 - 21	2	
1AHC-1560-123-3292	183887			52 - 63	2	A170
1AHC-1560-123-3291	183888			52 - 65	2	A171
1AHC-1560-180-7743	183921			87	8	A434
1AHC-1560-123-0891	18393			87 - 64	9	A435
1AHC-1560-565-6560	183945			87	6	A172
1AHC-1560-123-1761	183946			87 - 65	9	A437
1AHC-1560-320-5331	183947			87 - 41	2	B 84
1AHC-1560-040-6407	183953			87 - 53	2	A173
1AHC-1560-109-9659	183955L			87 - 49	1	B 85
1AHC-1560-130-0686	183955R			87 - 50	1	B 85
1AHC-1560-123-0890	183966			87 - 52	2	A174
	183967			87	1	B 86
1AHC-1560-121-3663	183970			87 - 46	1	A175
	183976			87 -	8	A176
	183977			87	6	A442
1AHC-1560-122-9687	183979			87 - 39	2	C228
	183980			87 - 54	1	C229
1AHC-1560-109-4099	183982			87 - 51	2	A443
1AHC-1560-123-0889	183985			87 - 24	6	B 87
1AHC-1560-121-4687	183986			87	2	A444
1AHC-1560-123-0886	183996P			87 - 1	2	A446
1AHC-1560-123-0887	183998			87 - 18	2	A178
	18405-29			64 - 29	1	A181
1AHC-1560-123-0543	184200-208			63 - 14	2	A219
	184402			57	1	E 68
1AHC-1560-029-1026	184402-8			57 - 1	1	
1AHC-1560-123-7929	184444			13 - 5	4	A245
	184470			2	1	C243
	184470-4			2	1	
1AHC-1560-182-4826	184690			2 - 9	1	C246
	18471			2	1	C247
	18471-14			2	1	
	18471-15			2 - 13	1	
	18471-16			2	1	
	184734			77 - 50	2	A248
1AHC-1560-434-7860	184820			99 -113	1	E 70
	184830			104 - 27	1	
1AHC-1560-117-5658	184832			104 - 29	2	A501
	18520			78	1	
1AHC-1560-123-5340	18526-19			5 - 3	1	A252
1AHC-1560-121-2697	18526-3			5 - 1	1	C251
	18526-610			2 - 3	1	
	18526-611			5	1	
	18526-9			5 - 32	4	A254
1AHC-1560-123-5339	185261			5 - 12	1	A255
1AHC-1560-125-0459	185262			5 - 4	1	A504
1AHC-1560-029-1033	185267L			5 - 25	1	A506
1AHC-1560-029-1034	185267R			5 - 26	1	A506
1AHC-1560-029-1035	185268L			5 - 28	1	A507
1AHC-1560-029-1036	185268R			5 - 29	1	A507
	185269			5 - 31	4	C376
1AHC-1560-692-0931	185270			5	1	B316
1AHC-1560-040-6410	185272			5 - 35	2	C377
1AHC-1560-327-1147	185272-2			5 - 16	2	C378
	185273			5 - 17	1	C379
1AHC-1560-112-9689	185274			5 - 33	1	C380
1AHC-1560-122-0171	18528-3			5 - 14	1	C383
	185349			35 - 58	4	
1AHC-1560-181-0503	18550-20			3 - 11	1	
1AHC-1560-181-0504	18550-21			3 - 13	1	
1AHC-1560-182-5343	18550-3			3 - 1	4	
	18550-35			3 - 5	1	
	18550-36			3 - 6	1	
1AHC-1560-123-5330	18550-4			3 - 3	1	B323
1AHC-1560-123-1391	18550-5			3 - 4	1	B324

STOCK NUMBER	PART NUMBER	SOURCE CODE		FIGURE AND INDEX NO.	QTY. PER ARTICLE	MICRO-FILM INDEX
1AHC-1560-123-1389	18550-6L			3 - 8	1	B325
1AHC-1560-123-1390	18550-6R			3	1	B325
1AHC-1560-182-5344	18550-7L			3 - 9	1	B326
1AHC-1560-180-9395	18550-7R			3	1	B326
1AHC-1560-327-1148	185501			3 - 16	4	
1AHC-1560-109-8992	18551-2L			3 - 17	1	
1AHC-1560-109-7808	18551-2R			3 - 18	1	
	18551-3L			3 - 36	1	
	18551-4R			3 - 19	1	
1AHC-1560-147-5694	18552-1			3 - 20	1	
1AHC-1560-180-9397	18552-10			4 - 3	1	B328
1AHC-1560-180-9399	18552-2			3 - 21	2	
1AHC-1560-180-9400	18552-4			3 - 22	2	
	185530			3	1	E 72
	185530-18			3 - 32	1	
	185530-22			3 - 33	1	
	185530-24			3	1	
1AHC-1560-568-6881	185530-7			3 - 35	1	A513
	185531L			3 - 31	1	
1AHC-1560-122-0181	185532			3 - 38	1	A514
1AHC-1560-122-0184	185536			3 - 37	1	
1AHC-1560-109-6788	185543			3 - 40	1	
	185544			3 - 44	1	
	185545			3 - 43	1	
	18560			4	1	E108
	18560-10			4 - 18	2	
	18560-600			2 - 2	1	
1AHC-1560-180-9404	185601			4 - 4	1	A516
1AHC-1560-117-5666	18561-1			4 - 1	2	
1AHC-1560-568-3565	185622			104 - 34	1	A523
1AHC-1560-307-0607	185633			4 - 9	1	A526
1AHC-1560-122-7166	185674			4 - 26	1	C400
1AHC-1560-122-7170	185675			4 - 28	1	C401
	185678			5 - 6	1	A527
1AHC-1560-122-5126	185681			4 - 30	1	C405
1AHC-1560-525-1171	185682			4 - 32	1	C406
1AHC-1560-182-5609	185700-1			8 - 21	1	
1AHC-1560-180-9412	185700-3			8 - 28	1	E 73
	185792			35 - 36	8	
1AHC-1560-121-7798	185901-500*			33	1	
1AHC-1560-181-0500	185901*			33 - 34	1	E 74
1AHC-1560-181-0501	185903			33 - 35	2	E 75
1AHC-1560-121-2702	185905-1**			35 - 62	2	
	185905**			35 - 65	2	B335
1AHC-1560-122-1907	185915			35	4	B193
1AHC-1560-117-8733	185916			35 - 2	4	B340
1AHC-1560-117-8262	185917			35 - 57	4	
1AHC-1560-122-1906	185920*			35	4	B195
1AHC-1560-109-3885	185967			35	8	B200
1AHC-1560-120-8839	185968			35 - 45	8	
1AHC-1560-122-6156	185969			51 - 31	4	D 43
	185971			35	4	C257
1AHC-1560-662-7551	185972			35 - 23	16	D 44
	185974			35	2	
	185978			35 - 27	4	
	185979-1			35 - 26	10	
	185980			35	8	
	185980-1			35 - 25	8	
	185981			35	4	
	185981-1			35 - 32	4	
	185984			35 - 41	12	
1AHC-1560-122-7969	185988			35	8	
1AHC-1560-122-7411	186003			11 - 18	2	D 49
1AHC-1560-035-1627	186033			9 - 57	1	C259
	186033-1			9 - 58	1	
1AHC-1560-122-8849	186037			9 - 43	2	D 52
	186038			9 - 45	2	B206
1AHC-1560-181-0519	186040-2			9 - 51	1	
	186043			9 - 46	1	B208
1AHC-1560-117-9160	186046			9 - 54	1	D 54
	186047			9 - 55	4	D 55
1AHC-1560-121-2742	186048			9 - 56	4	B209
	186050A-26			9	1	
	186051-1			9 - 37	1	
1AHC-1560-125-5309	186051-3			9 - 37	1	
1AHC-1560-125-4239	186056			9	1	B210
	186056-1			9 - 21	1	
	186057			9 - 26	5	B211
	186060			9	4	C263
1AHC-1560-121-8881	186060-1			9 - 23	4	
1AHC-1560-029-1074	186061			9 -	1	B348
1AHC-1560-040-6412	186061-2			9 - 34	1	
1AHC-1560-122-2101	186068L			8 - 18	1	D 57
1AHC-1560-122-2100	186068R			8 - 19	1	D 57
	186070			9 - 27	2	B349
	186071			9 - 28	2	B350
	186072			9 - 29	2	B351
1AHC-1560-125-3953	186073			9 - 30	1	B352
1AHC-1560-121-2765	186074			9 - 31	1	B353
	186110			10 - 28	2	E 80
1AHC-1560-121-8873	186119			10	2	B215
	186119-1			10 - 2	1	
1AHC-1560-035-1630	186127			10 -	2	
	186128-2			10 - 30	2	
	186132			10 - 4	8	B219

STOCK NUMBER	PART NUMBER	SOURCE CODE		FIGURE AND INDEX NO.	QTY. PER ARTICLE	MICRO-FILM INDEX
1AHC-1560-181-0521	186138			65	1	C264
1AHC-1560-181-0522	186138-1			65 - 22	1	
1AHC-1560-181-0523	186151			10 - 32	2	B222
1AHC-1560-109-2753	186160-1			9 - 62	2	
1AHC-1560-109-2752	186160-2			65 - 24	1	
1AHC-1560-181-0524	186170			9 - 41	2	B361
1AHC-1560-117-2777	186200L			8 - 7	1	E 82
1AHC-1560-117-2781	186200R			8 - 8	1	E 82
1AHC-1560-181-0526	186206			11 - 13	2	B366
	186207-1			11 - 22	2	
	186207-2			11 - 23	2	
1AHC-1560-029-1084	186210			11	6	B367
	186210-1			11 - 5	6	
1AHC-1560-117-7833	186215			11	2	B368
	186215-2			11 - 8	2	
	186250			12 - 1	1	
	186250-1			12 - 2	1	
1AHC-1560-532-8223	186250-14			12 - 7	1	
	186253-6			12 - 21	1	
	186253-7			12 - 22	1	
	186253L			12	1	B369
	186253R			12	1	B369
1AHC-1560-122-8963	186256			12	1	C272
1AHC-1560-122-8962	186256-1			12	1	
1AHC-1560-122-2102	186256-2			12 - 3	1	
	186256-3			12 - 4	1	
1AHC-1560-122-2106	186262-1			8 - 25	1	
1AHC-1560-122-2105	186262-2			8 - 26	1	
1AHC-1560-117-3131	186270			12 - 6	1	C273
1AHC-1560-122-8964	186271-1			12	1	
1AHC-1560-121-2748	186278			12 - 25	1	B240
1AHC-1560-117-3239	186350			8 - 11	1	E 87
1AHC-1560-117-3262	186350-1			8 - 12	1	
	187002			9 - 69	4	D 98
1AHC-1560-125-1289	187002-2			9 - 68	4	D 99
1AHC-1560-434-7875	187006			61 - 13	2	D100
	187007-2			18 - 33	2	
	187021			65 - 33	1	D101
1AHC-1560-662-7162	187022			65 - 32	1	D102
	187054			99 - 18	1	D103
	187059/M/			63 - 3	8	
	187090			72	1	B381
	187090-1			72 - 1	1	
1AHC-1560-306-3196	187096			65 - 34	1	B244
1AHC-1560-040-6422	187096-1			65 - 36	1	
1AHC-1560-097-3785	187096-3			65 - 38	1	
1AHC-1560-121-9368	187097			65 - 27	1	B245
1AHC-1560-040-6423	187097-1			65 - 29	1	
	187097-3			65 - 31	1	
1AHC-1560-181-0555	187108			66 - 18	2	D106
	187111-14			64 - 33	1	
1AHC-1560-121-9376	187111-18			64 - 32	1	
	187111-2			9 - 72	2	
	187111-6			9 - 73	2	
1AHC-1560-181-0556	187132			18 - 34	2	D107
1AHC-1560-121-9210	187156			66 - 12	1	B378
	187156-10			66	1	
1AHC-1560-040-6425	187156-2			66 - 14	1	
	187156-4			66 - 15	1	
	187156-6			66	1	
	187156-8			66	1	
1AHC-1560-121-8832	187171-1			65 - 15	1	
1AHC-1560-035-1634	187171-4			65 - 14	1	
	187172			65 - 18	2	D108
1AHC-1560-125-1290	187202			65 - 8	1	D110
1AHC-1560-125-1000	187300			61	1	B246
1AHC-1560-125-0999	187300-1			61	1	
1AHC-1560-125-5433	187304			17 - 29	1	
1AHC-1560-181-2128	187304-1			18 - 26	1	
1AHC-1560-109-3667	18732			18 - 27	2	B249
1AHC-1560-327-1157	18734L			17 - 26	1	B250
1AHC-1560-035-1636	18734R			18 - 23	1	B250
1AHC-1560-122-8969	187402			27 - 23	6	D115
	18743			63 - 19	2	B252
	187482			27 - 21	1	D117
1AHC-1560-125-0227	187503			100 - 32	1	C277
1AHC-1560-125-0226	187503-1			100 - 31	1	
1AHC-1560-121-3660	187506			67 - 4	1	D118
1AHC-1560-121-4559	187507			67 - 1	2	B253
	187508			67 - 12	2	D118
1AHC-1560-181-0551	187509A			100 - 29	2	B384
1AHC-1560-181-2133	187511			67 - 2	2	B385
1AHC-1560-181-2134	187512			67 - 3	2	B256
1AHC-1560-532-8226	187513			67 - 9	4	D123
	187515			67 - 8	4	D124
1AHC-1560-123-0654	187516			67 - 11	2	D125
1AHC-1560-241-1919	187517			65 - 1	2	D126
1AHC-1560-241-1920	187522			67 - 24	2	B257
1AHC-1560-112-9791	18754-1			63 - 15	4	
1AHC-1560-166-9290	18754-2			61 - 19	6	B259
1AHC-1560-694-6911	187600			66	1	E 89
1AHC-1560-121-8882	187601-1			66 - 1	1	
1AHC-1560-123-5333	187601-2			66 - 3	2	
1AHC-1560-125-1903	187602			66	1	B386
	187603			66 - 7	1	D128

STOCK NUMBER	PART NUMBER	SOURCE CODE		FIGURE AND INDEX NO.	QTY. PER ARTICLE	MICRO-FILM INDEX
1AHC-1560-123-0656	187604			66 - 10	1	B387
1AHC-1560-123-5334	18761			66 - 5	1	B261
	187660L			13	1	C280
	187660R			13	1	C280
1AHC-1560-040-6426	187661			62	2	D130
1AHC-1560-125-0960	187662			13 - 55	2	D131
1AHC-1560-117-8151	187669			19 - 30	2	D133
1AHC-1560-536-7777	187689			9 - 48	2	B263
	187690L			9	1	C281
	187690R			9	1	C281
1AHC-1560-121-4166	187691			9 - 3	2	D134
1AHC-1560-181-2137	187692			9 - 9	2	D135
	187693			9 - 5	2	B264
	187694			9 - 8	2	D136
	187695			9	2	B389
	187704			11 - 15	2	
	187705			12	1	B390
1AHC-1560-121-0379	187707			12 - 10	1	D138
1AHC-1560-123-0653	187710			10	3	D140
1AHC-1560-121-3677	187710-1			10 - 22	3	
1AHC-1560-123-7928	187710-2			10 - 23	5	
	187711			10 - 25	3	D141
1AHC-1560-123-0652	187712			10 - 24	3	D142
	187713-1			17 - 63	1	
1AHC-1560-166-3736	187713-2			9 - 74	1	
	187714-1			9 - 10	4	
	187714-3			52 - 85	6	
	187714-4			9 - 15	2	
1AHC-1560-123-3321	187715			9 - 4	4	D144
1AHC-1560-123-7916	187716			11 - 17	2	
1AHC-1560-122-9677	187717A			66 - 6	1	B391
1AHC-1560-118-0876	187719-1			9	1	
	187719-2			9 - 18	1	
1AHC-1560-348-8234	187719-3			9 - 11	2	
1AHC-1560-118-0875	187719-4			9	1	
1AHC-1560-348-8235	187719-5			9 - 16	1	
1AHC-1560-118-0878	187719-6			9	1	
	187719-7			9 - 13	1	
1AHC-1560-120-8818	187726-4			10 - 16	2	
	187727			10 - 20	3	D145
	187732			64 - 6	2	D147
1AHC-1560-181-0533	187735-1			9 - 14	1	
1AHC-1560-182-4825	187735-2			66 - 21	2	
1AHC-1560-182-4824	187736-1			66 - 23	2	D149
1AHC-1560-532-8229	187736-2			66 - 24	2	D150
1AHC-1560-125-1444	187737-1			9 - 85	1	
1AHC-1560-122-9680	187745			19	1	
1AHC-1560-120-8817	187746			19 - 18	1	D152
	187747			19 - 19	1	D153
1AHC-1560-121-6555	187748			11 - 11	2	
1AHC-1560-307-0627	187752-2			72 - 8	3	
1AHC-1560-307-0628	187753-1			72 - 14	1	
1AHC-1560-570-1806	187753-2			72 - 15	1	
	187753-3			72	1	
	187755			72 - 4	2	D155
1AHC-1560-125-4601	187756-1			72 - 37	1	
1AHC-1560-109-7322	187756-3			72 - 35	1	
	18776-1			74 - 18	1	
1AHC-1560-478-5625	18776-2			74 - 21	2	
1AHC-1560-196-5905	18776-3			74 - 20	2	
1AHC-1560-478-5626	18776-4			74	1	
	187762			73	2	C282
1AHC-1560-123-7914	187762-2			73 - 6	4	
	187762-4			73 - 2	2	
1AHC-1560-181-0534	187763			73 - 10	2	B269
1AHC-1560-125-2033	187764L			74	1	F163
1AHC-1560-121-4577	187764L-1			74 - 1	1	
1AHC-1560-122-9683	187764L-2			74 - 5	1	
1AHC-1560-121-4576	187764L-3			74 - 3	1	
1AHC-1560-121-6544	187764R			74	1	F180
1AHC-1560-121-3656	187764R-1			74 - 2	1	
1AHC-1560-121-3657	187764R-2			74 - 4	1	
1AHC-1560-166-9711	187771			74 - 10	2	D157
	187772			74 - 7	2	D158
1AHC-1560-123-2814	187773			72 - 43	4	B271
1AHC-1560-307-0630	187775-2			74 - 15	2	
1AHC-1560-570-1807	187775-4			74 - 16	2	
	187776			73 - 13	2	B272
1AHC-1560-123-2817	187777			73 - 5	2	D160
1AHC-1560-123-0611	187778			73 - 12	2	D161
1AHC-1560-040-6429	187779-1			72 - 47	2	
1AHC-1560-040-6430	187779-2			72 - 48	1	
1AHC-1560-040-6431	187779-3			72 - 10	1	
1AHC-1560-123-2816	187783			9 - 6	2	D162
1AHC-1560-122-1452	187785			72 - 26	1	B274
1AHC-1560-121-5434	187786			72 - 41	1	D163
1AHC-1560-118-0873	187787-1			72 - 30	1	
1AHC-1560-122-9611	187788			72 - 20	1	B275
	187789			72 - 12	1	D165
	187793			76 - 6	1	
	187796-1			75 - 4	2	B276
	187796-2			76 - 3	1	
1AHC-1560-123-4327	187797			75 - 16	2	D166
	187798			73 - 9	2	D167
	187800			72 - 45	1	C283

STOCK NUMBER	PART NUMBER	SOURCE CODE		FIGURE AND INDEX NO.	QTY. PER ARTICLE	MICRO-FILM INDEX
	187800-1			72	1	
1AHC-1560-122-9771	187803			64	1	B399
	187803-1			64 - 9	1	
	187805			73 - 11	2	D170
	187808			76 - 17	1	
1AHC-1560-307-0631	187809			75 - 18	2	D171
	187811			10 - 15	4	D172
1AHC-1560-122-1445	187812			72 - 6	1	B400
1AHC-1560-121-4557	187825			72 - 2	1	B278
	187827			64 - 7	1	
1AHC-1560-181-0537	187828			73 - 15	2	D175
1AHC-1560-307-0632	187830			72	1	
	187830-1			72	1	
1AHC-1560-118-0885	187831			72 - 27	1	D176
1AHC-1560-122-9604	187837			72 - 46	5	K 58
	187838			72 - 40	1	B279
1AHC-1560-035-1639	187921			28 - 3	1	B280
1AHC-1560-662-6440	188009			24 - 6	3	D179
	188010			24 - 38	1	D180
1AHC-1560-109-7117	188022			21 - 48	1	
1AHC-1560-109-7116	188022-1			21	1	
	188023			21 - 55	2	B282
1AHC-1560-181-0543	188023-1			21	2	
1AHC-1560-109-4970	188024			21 - 56	1	D181
1AHC-1560-109-4971	188024-1			21	1	
	1882			67 - 35	4	
	188432-2			23 - 35	2	
	188453-1			21 - 62	2	
	188453-2			21 - 63	2	
	188456			21 - 67	12	
1AHC-1560-182-5496	188503			24 - 12	2	B286
1AHC-1560-348-8236	188503-1			24 - 9	2	
1AHC-1560-093-9069	188504			24 - 46	2	
	188505			24 - 45	2	
1AHC-1560-122-8947	188509-1			24 - 54	1	
1AHC-1560-123-1029	188511			26	1	B287
1AHC-1560-122-9613	188512			26 - 1	1	B138
1AHC-1560-122-9673	188515			26 - 4	1	B288
1AHC-1560-530-4725	188516			26 - 5	2	B139
	188517			26 - 10	1	B140
1AHC-1560-123-1946	188518			26 - 3	1	
1AHC-1560-123-1113	188518-1			26	2	B289
1AHC-1560-123-1030	188532			26 - 12	1	B290
1AHC-1560-122-9675	188561-1			26 - 6	2	
1AHC-1560-123-1109	188562			24 - 7	3	B142
1AHC-1560-123-1797	188564			67 - 19	2	B292
1AHC-1560-122-9676	188568			26 - 8	1	B143
1AHC-1560-123-1944	188601			31 - 15	1	C285
1AHC-1560-123-1945	188602			31 - 3	1	B404
1AHC-1560-123-1947	188605			31 - 5	1	B294
1AHC-1560-123-3726	188608			31 - 14	1	B145
	188615-1			31 - 2	1	
	188615-2			31 - 16	1	
	188616			31 - 20	1	B147
1AHC-1560-122-9711	18865			32 - 29	1	K254
1AHC-1560-123-1950	18865-14			30 - 31	1	B148
1AHC-1560-109-3879	188651			30 - 27	2	B150
1AHC-1560-112-9435	188655			30 - 57	2	B151
1AHC-1560-112-9434	188657			30 - 56	2	B295
1AHC-1560-123-1408	188666			30 - 77	2	B152
1AHC-1560-029-1106	188667			30 - 2	2	B405
1AHC-1560-121-8917	188671			30 - 79	2	B153
1AHC-1560-125-2614	188673			30 - 59	2	B154
1AHC-1560-693-9756	18871			30 - 15	4	B156
1AHC-1560-122-9767	188851-1			24 - 14	1	
1AHC-1560-122-9766	188851-2			72 - 17	1	B296
1AHC-1560-122-8948	188901			25 - 1	1	C286
1AHC-1560-029-1107	188902			25 - 10	1	B406
1AHC-1560-166-9557	188905A-1			25 - 6	1	
	188905A-3			25 - 7	1	
1AHC-1560-123-1795	188906			24 - 57	1	
	188907			24 - 59	2	
1AHC-1560-123-7937	188908			25 - 5	2	B160
1AHC-1560-123-7936	188909*			25 - 19	1	B161
	188912			24 - 72	1	
	188913			24 - 71	1	
1AHC-1560-109-5064	188914			24 - 61	1	
1AHC-1560-122-8973	188951-1			24 - 29	1	
1AHC-1560-122-8972	188953			24 - 37	1	B301
1AHC-1560-121-2683	188955			24 - 27	1	B302
	188956			24 - 43	1	B163
	188970			25 - 9	1	
1AHC-1560-315-4110	189015			40 - 11	1	
1AHC-1560-125-6665	189018			40 - 10	1	
1AHC-1560-326-2469	189021			40 - 66	2	
1AHC-1560-123-3322	189038-2			51 - 1	1	
1AHC-1560-123-3323	189038-4			51 - 2	1	
1AHC-1560-182-5485	189046			52 - 49	4	B164
	189063			52 -111	18	B165
1AHC-1560-125-4648	189073			51 - 71	1	B304
	189074			52 - 50	4	B166
	189077			52 - 27	8	B305
1AHC-1560-121-4573	189082			52 - 48	2	B306
1AHC-1560-182-5501	189083			52 -104	4	B167
1AHC-1560-125-1283	189085			52 - 40	4	B168

STOCK NUMBER	PART NUMBER	SOURCE CODE		FIGURE AND INDEX NO.	QTY. PER ARTICLE	MICRO-FILM INDEX
1AHC-1560-125-1312	189087			52 - 41	8	B169
1AHC-1560-125-1284	189088			52 - 42	4	B170
1AHC-1560-574-5605	189089			52 - 57	4	B171
1AHC-1560-123-0529	189095-1			51	1	
1AHC-1560-123-2122	189095-10			51	1	
1AHC-1560-123-2123	189095-11			51 - 16	2	
1AHC-1560-123-2454	189095-2			51 - 75	1	
1AHC-1560-123-3324	189095-3			51	1	
1AHC-1560-123-2455	189095-4			51 - 44	1	
1AHC-1560-122-4300	189095-5			51 - 48	1	
1AHC-1560-122-7621	189095-6			51	1	
1AHC-1560-122-7622	189095-7			51 - 55	1	
1AHC-1560-122-7623	189095-8			51	1	
1AHC-1560-123-0537	189095-9			51 - 59	1	
	189105			33 - 8	2	B172
	189106			33 - 7	4	B173
1AHC-1560-348-8239	189108			39 - 2	2	B175
1AHC-1560-307-0639	189109			39 - 1	4	B176
	189110-1			33 - 39	2	
1AHC-1560-182-5506	189121			37 - 21	1	C289
1AHC-1560-130-1077	189140			36 - 25	2	C290
1AHC-1560-130-1076	189142			36 - 23	1	C291
1AHC-1560-123-2714	189154			36 - 4	1	E 90
1AHC-1560-182-5463	189155			38 - 13	2	B177
1AHC-1560-122-9317	189158			36 - 3	1	E 91
1AHC-1560-130-1075	189159			36 - 21	1	C292
1AHC-1560-130-1074	189159-1			37 - 29	1	
1AHC-1560-130-1073	189160			36 - 33	2	C293
1AHC-1560-130-1072	189161			36 - 31	1	C294
1AHC-1560-130-1071	189162			36 - 29	1	C295
1AHC-1560-122-7624	189163			36 - 2	1	C296
	189164			38 - 15	4	B179
1AHC-1560-122-7626	189165			36 - 1	1	E 92
1AHC-1560-130-1070	189166			36 - 27	1	C297
1AHC-1560-122-7627	189169			36 - 38	3	B182
1AHC-1560-122-7628	189170			36 - 39	3	B183
	189171			36	1	
1AHC-1560-123-2716	189171-10			36 - 17	1	
1AHC-1560-123-0538	189171-12			36 - 18	1	
1AHC-1560-123-2717	189171-2			36 - 9	1	
1AHC-1560-123-7625	189171-4			36 - 10	1	
1AHC-1560-122-9268	189171-6			36 - 13	1	
	189171-630			36	1	
1AHC-1560-122-9269	189171-8			36 - 14	1	
1AHC-1560-123-3721	189172			36 - 41	1	B184
1AHC-1560-123-3722	189173			36 - 42	1	B185
1AHC-1560-122-9272	189174			33 - 41	1	E 94
1AHC-1560-122-9273	189175			33	1	E 96
	189175-631			37	1	
1AHC-1560-182-5492	189176			37 - 31	1	C298
1AHC-1560-122-9274	189177			37 - 1	1	E 95
1AHC-1560-117-4002	189178			37 - 25	1	B411
1AHC-1560-029-1116	189179			37 - 23	1	C299
1AHC-1560-123-0516	189180			37 - 4	1	E 97
1AHC-1560-123-0517	189181			37 - 3	1	E 98
1AHC-1560-123-1400	189182			37 - 2	1	E 99
1AHC-1560-123-0518	189183			36 - 35	1	B186
1AHC-1560-147-0939	189184			36 - 36	1	B187
1AHC-1560-123-1401	189185			51 - 46	2	
	189186			37	1	E100
1AHC-1560-123-1403	189186-10			37 - 17	1	
1AHC-1560-123-1404	189186-12			37 - 18	1	
1AHC-1560-123-1405	189186-2			37 - 9	1	
1AHC-1560-123-1406	189186-4			37 - 10	1	
1AHC-1560-123-1407	189186-6			37 - 13	1	
1AHC-1560-123-0519	189186-8			37 - 14	1	
	189207-2			34 - 21	2	
1AHC-1560-182-5466	189208-2			34 - 12	1	
1AHC-1560-182-5467	189208-3			34	1	
1AHC-1560-125-5844	189210L			34	1	C301
1AHC-1560-125-4365	189210R			34	1	C301
1AHC-1560-123-3723	189211L			34 - 5	1	B189
1AHC-1560-123-3724	189211R			34	1	B189
1AHC-1560-121-8831	189212			34 - 3	2	B190
1AHC-1560-123-3725	189213			34 - 6	2	B313
1AHC-1560-122-8862	189214-14L			13 - 77	1	
1AHC-1560-122-8863	189214-14R			13	1	
	189214L			13 -	1	E102
	189214R			13	1	E102
1AHC-1560-123-0528	189217			34 - 27	2	B413
1AHC-1560-122-8866	189218			34 - 29	4	B191
1AHC-1560-122-8867	189220			34 - 25	2	B192
1AHC-1560-122-8869	189224			36 - 44	4	B483
1AHC-1560-125-3839	189238			38 - 10	2	C302
1AHC-1560-121-9515	189250			87 - 13	2	B485
1AHC-1560-120-8919	189253			87 - 16	2	B486
1AHC-1560-122-8887	189255			87 - 15	4	B415
1AHC-1560-029-1124	189256			87 - 10	2	B487
1AHC-1560-122-8888	189258			87 - 9	2	B488
	189302			50 - 53	1	B490
1AHC-1560-123-2927	189324			46 - 32	2	B417
	189361			58 - 17	2	
1AHC-1560-181-0201	189396			83 - 40	2	B418
1AHC-1560-532-8253	189397			83 - 52	2	B419
1AHC-1560-181-0302	189398			83 - 51	2	B420

STOCK NUMBER	PART NUMBER	SOURCE CODE		FIGURE AND INDEX NO.	QTY. PER ARTICLE	MICRO-FILM INDEX
	189399			83 - 48	2	B421
	189414			50 - 80	1	B422
	189415			50 - 87	1	B423
	189416			50 - 88	1	B424
	189417			50 - 30	1	B425
	189418			50 - 34	1	B426
	189419			50 - 36	1	B427
	189420			50 - 24	1	B428
1AHC-1560-331-9305	189421			50 - 32	1	B429
1AHC-1560-304-8642	189422			50 - 4	1	B430
	189423			50 -113	1	B431
	189424			50 -112	1	B432
1AHC-1560-304-8645	189428			50 - 81	1	B433
1AHC-1560-304-8646	189429			50 - 83	1	B434
	189431			50 - 85	1	B435
1AHC-1560-304-8647	189432			50 - 55	1	B436
	189447			50 - 46	1	B437
	189450P			83	2	C307
1AHC-1560-181-0304	189460P-2			83 - 54	4	
	189464			50 - 2	1	B439
1AHC-1560-532-8254	189465			50 - 14	1	B440
1AHC-1560-181-0305	189466			50 - 10	1	B441
1AHC-1560-532-8255	189467			50 - 15	1	B442
	189469			50 - 48	1	B443
	189470			50 - 42	1	B444
	189471			50 - 50	1	B445
1AHC-1560-308-5787	189472			50 - 28	1	B446
	189473			50 - 26	1	B447
1AHC-1560-308-5788	189474			50 - 73	1	B448
1AHC-1560-308-5789	189475			50 - 74	1	B449
1AHC-1560-307-0647	189476			50 - 75	1	B450
	189477			50 - 76	1	B451
	189478			50 - 8	1	B452
1AHC-1560-122-8848	189490			52	2	B491
1AHC-1560-122-8846	189491-1			52 -107	2	
1AHC-1560-122-8847	189491-2			52 -106	2	
1AHC-1560-122-8723	189492			52 -108	2	B453
1AHC-1560-122-6162	189493-1			52 - 99	2	
1AHC-1560-122-6161	189493-2			52 - 97	2	
	189494			52 -102	8	B454
	189495			52 -103	4	B455
	189496			52 -101	4	B456
	189497			50 - 11	6	B457
	189498			88 - 11	2	
1AHC-1560-123-3114	189516			14 - 26	4	B460
	189519L			14 - 17	1	B497
	189519R			14	1	B497
1AHC-1560-122-9380	189521			51 - 34	1	B298
1AHC-1560-123-2925	189522			51 - 35	1	B499
	189523-1			51 - 39	4	
	189523-3L			51 - 37	2	C 64
	189523-4R			51	2	
1AHC-1560-118-1277	189525			51 - 41	2	B500
1AHC-1560-123-3326	189526AL			51 - 26	1	C509
	189526AR			51	1	C509
1AHC-1560-109-7268	189531			15 - 15	2	B501
	189567L			13 - 78	1	C 66
	189567R			13	1	C 66
	189602U			58 - 85	14	B461
1AHC-1560-041-4290	189606U			58 - 30	4	C 95
	189606U-4			58 - 32	4	
	189610			58 - 1	4	F162
1AHC-1560-181-0592	189614			58 - 2	4	C 67
1AHC-1560-122-9084	189621			58 - 5	4	C 68
1AHC-1560-122-9083	189622			58 - 4	4	B463
1AHC-1560-122-9081	189623			58 - 7	4	B507
	189624			58 - 8	4	B464
1AHC-1560-123-2288	189628			58 - 12	4	B465
	189630-1			58 - 15	1	
	189630-2			58	1	
1AHC-1560-123-9610	189631			57 - 12	4	B509
1AHC-1560-122-9669	18965-1			58	2	
1AHC-1560-122-9087	18965-2			58 - 46	2	B510
1AHC-1560-122-9760	189651-1			58 - 96	2	
1AHC-1560-122-9598	189651-2			58 - 99	2	
1AHC-1560-181-0593	189653			58 -117	2	C310
	189670P			56 - 3	4	B511
	189677			48 - 52	2	B512
	189680			48 - 53	2	B513
	189685			48 - 55	2	B466
1AHC-1560-029-1134	189686			48 - 45	2	
	189688			71 -149	1	
1AHC-1560-532-8266	18970			57 - 9	1	E104
	18971			57 - 13	1	E105
	189714			52 - 79	4	
1AHC-1560-123-9602	189717			46 - 48	2	B468
	189724U			58 - 86	2	C311
	189725U			58 - 87	2	B515
	189726-1			58 - 67	1	
	189726-2			58	1	
	189726U			58 - 84	2	B516
1AHC-1560-123-1748	189728U			58 - 88	2	B518
1AHC-1560-123-9597	189746			46 - 35	2	B520
1AHC-1560-125-1674	189749P			55	4	B521
	189750			58 -127	2	B471

STOCK NUMBER	PART NUMBER	SOURCE CODE		FIGURE AND INDEX NO.	QTY. PER ARTICLE	MICRO-FILM INDEX
1AHC-1560-123-9596	189759			40 - 32	4	B472
1AHC-1560-532-8274	189777			42 - 10	1	B473
	189801P-8			55 - 1	1	
	189801P-9			55	1	
	189806			56 - 10	1	B475
	189807			56	1	B476
1AHC-1560-335-6499	189812			58 - 62	2	B565
1AHC-1560-121-9204	189817			13 - 43	2	C 76
1AHC-1560-131-7560	189862L			13 - 68	1	C315
1AHC-1560-131-7559	189862R			13	1	C315
1AHC-1560-122-8213	189863			13 - 73	2	B527
1AHC-1560-121-3869	189864			13 - 69	2	B528
1AHC-1560-117-9908	189865			13 - 70	2	C 79
1AHC-1560-122-8918	189869			13 - 72	4	B480
1AHC-1560-125-5303	189878			51	1	B529
	189897			33 - 64	1	
1AHC-1560-335-6501	189906			33 - 70	1	
	2CD-6362			84 - 15	1	
	2CD-6440			84 - 20	1	
	2M-34739-39			11 - 21	2	
	201717-6			52 - 33	4	
	201717-7			52 - 28	4	
	202841-320			97 -125	1	
	202841-720			97	2	
	203KDD			73 - 7	2	
	203886-1			15 - 4	10	
	203886-2			15 - 1	6	
1AHC-1560-121-3868	203904			75 - 15	1	J285
1AHC-1560-181-0621	203906-1			15 - 7	4	
	203906-2			15 - 10	2	
	20400			83 - 3	2	
	204128			75 - 8	1	J299
	204248-8-0304			14 - 6	2	
	2051			94 - 78	2	
	205218-2			87 - 47	1	
	206248-10-0400			58 - 54	8	
	206248-2-0308			58 -119	2	
	206248-2-1012			58 -112	2	
	206248-2-10504			58 - 52	2	
	206248-2-1100			58 -101	2	
	206248-2-11108			58 - 50	2	
	206248-2-1200			58 -109	2	
	206248-2-1304			58 -104	2	
	206248-2-1500			58 -106	2	
	206248-2-1600			58 - 43	2	
	206248-2-1800			58 - 40	2	
	206248-2-1816			58 - 37	2	
	206248-2-1912			58 - 98	2	
	206248-2-2012			58 - 34	2	
	206248-2-5904			58 - 95	2	
	206248-3-0908			58 -120	2	
	206248-3-3600			57 - 68	1	
	206248-3-4500			56 - 5	4	
	206248-3-5908			58 -121	2	
	206248-3-7200			57 - 67	11	
	206248-7-0112			57 - 4	1	
	206248-7-0800			14 - 30	3	
	206248-7-0808			57 - 5	1	
	206248-7-0912			57 - 8	1	
	206248-7-1400			57 - 6	1	
	206248-7-1800			14 - 22	2	
	206248-8-0208			14 - 2	2	
	206248-9-0208			14 - 10	2	
	20820-1			49	1	
	209-0000			2 - 12	1	K100
	209-0000-12			7 - 7	1	
	209-0000-14			7 - 1	1	
1AHC-1560-345-2516	209-0000-4			7 - 9	1	
	209-0000-6			7 - 5	1	
	209-0000-8			7 - 8	1	
	209-1000			7 - 6	1	K 35
	209-1001			7 - 2	1	K 36
	209-1002			7 - 10	1	K 59
	209-1005			7 - 3	1	K 38
	21			6 - 3	21	
	214182			29 - 21	1	
	218077			29 - 23	1	
	22D30-313			40 - 1	2	
	22M62			9	20	
	225XAX215			97 - 22	1	
	22500			40 - 40	10	
	24000-3*			58	2	
	2423X1/4AZ10			5 - 10	1	
	2609			104 - 13	1	
	26404			38 - 23	2	
	26900-3*			58 - 20	2	
	27082**			83 - 24	1	
	28X-1598*			83	1	
	29982			39 - 2	1	
	30E16-1-A			33 - 56	2	
1AHC-1560-181-0641	304127			75 - 19	1	
1AHC-1560-122-0156	304918			35	2	
1AHC-1560-122-0157	304918-1			35	2	
	304918-2			35 - 30	2	
	304918-3			35	2	

STOCK NUMBER	PART NUMBER	SOURCE CODE		FIGURE AND INDEX NO.	QTY. PER ARTICLE	MICRO-FILM INDEX
	3053			94	4	
	305911			87 - 44	1	J297
	3115-1HT-4D			48 - 24	3	
	3115-1HT4D			49 - 12	3	
	3120			71	1	
	316			51 - 60	2	
	31903			97 - 94	4	
	33B4741			99 - 54	1	
	3355-2			96 - 32	4	
	3380-1			96	4	
1AHC-1560-233-3930	34-184326			63 - 17	1	C 1
	34-184326-1			63	1	
	35-361703			17 - 30	1	F181
	35-361703-1			18 - 40	1	
	35-524011			27 - 1	4	
	36G4465			91	1	
	37A3528			55 - 28	2	
	37A5222-12			94 - 3	2	
	37A5949*			56 - 19	2	
	37B6535			83 - 55	2	
	37D6114-4*			55	2	
	37D6210			55 - 22	6	
	39A4240			48 - 60	4	
	39D3922			99 - 37	1	
	39116			40 - 60	2	
	39982			39 - 1	1	
	4-189036			41 - 23	2	
	4-189125			33 - 2	2	
	4B2-P6**			40 - 9	2	
	4B2-P8**			40	2	
	4CCT-D			43 - 12	2	
	4HTD			55	1	
	404-180036			40 - 61	2	
	404-180107			64	1	C 10
	404-180120			53 - 15	1	C 12
	404-180193			23 - 42	1	
	404-180234			101 - 3	196	C 18
	404-180520			92	1	C 84
	404-180520-1			92	1	
	404-180522			92 - 19	1	C 85
	404-180522-1			92	1	
1AHC-1560-327-1167	404-180523			92 - 20	1	C 86
	404-180523-1			92	1	
	404-180543			94 -180	1	
	404-180593			92 - 67	1	C 87
	404-180643			99	1	
	404-180821			94 -181	1	
	404-180990			10 - 41	1	C 92
	404-181160			13 - 37	1	C541
	404-181160-1			13	1	
	404-183019			6 - 1	1	
	404-183126			100 - 19	1	C545
	404-183127			100 - 20	1	
	404-183134			100 - 24	2	B537
	404-183137-44			100 - 9	1	
	404-183150			104	1	C329
1AHC-1560-694-6914	404-183151			104 - 2	1	
1AHC-1560-694-6916	404-183152			104 - 1	1	
	404-183601-28			94 - 31	1	
	404-183601-30			94 - 28	1	
	404-183601-32			94 - 26	1	
	404-183601-4			94 - 27	1	
	404-183601-6			94 - 36	1	
	404-183829			40 - 62	2	
	404-183898			45 - 12	1	
	404-183958-2			87 - 14	2	
	404-183958-6			51 - 61	2	
	404-183981			87 - 60	2	C549
	404-184014			63 - 1	3	
	404-184071-10			2	1	
	404-184071-2			2 - 10	1	
	404-184071-4			2	1	
	404-184071-8			2	1	
	404-184241			16	1	C558
	404-184241-1			16	1	
	404-184321*			24 - 1	1	B553
	404-184452-10			6 - 15	2	
1AHC-1560-335-6502	404-184455-16			6 - 10	1	
	404-184455-18			6 - 11	2	
	404-184455-2			2	5	
	404-184455-24			2	5	
	404-184455-4			6	1	
1AHC-1560-029-1170	404-184458			2 - 6	3	K 80
1AHC-1560-029-1171	404-184459			2 - 5	6	C340
	404-184459-2			2	5	
	404-184718			77 - 38	1	B556
	404-184718-1			77	1	
	404-184719			77 - 39	1	B557
	404-184719-1			77	1	
	404-184744			77 - 9	1	C 35
	404-184748			77 - 5	1	C 36
	404-184749			77 - 3	2	C 37
	404-184757			77	2	C341
	404-184757-2			77 - 48	2	
	404-184773			77 - 47	2	C 38

STOCK NUMBER	PART NUMBER	SOURCE CODE		FIGURE AND INDEX NO.	QTY. PER ARTICLE	MICRO-FILM INDEX
	404-185270			5	1	B558
	404-185270-2			5 - 11	2	
1AHC-1560-694-3722	404-185270-602			5	1	
	404-185271			5 - 8	1	
	404-185507			3 - 25	1	C342
	404-185507-1			3	1	
1AHC-1560-327-1169	404-185508			3 - 26	2	C 39
1AHC-1560-334-6028	404-185509			3 - 27	2	
1AHC-1560-695-1783	404-185511			3 - 29	1	F177
1AHC-1560-693-6568	404-185511-1			3	1	
1AHC-1560-092-3653	404-185512			3 - 30	2	C565
1AHC-1560-029-1175	404-185520			2 - 8	1	D 2
1AHC-1560-029-1176	404-185520-1			2	1	
1AHC-1560-320-5334	404-185560			3 - 23	2	
1AHC-1560-525-9409	404-185622			99 -125	2	B559
	404-185670			4	1	C345
1AHC-1560-040-6448	404-185671			4 - 23	1	B560
	404-185807			16 - 21	1	B561
	404-185807-1			16	1	
	404-185808			16 - 20	1	B562
	404-185808-1			16	1	
	404-185954-1			16	1	
1AHC-1560-568-3568	404-185954-2			16	1	
1AHC-1560-434-7936	404-185955			16 - 1	1	C346
	404-185955-1			16	1	
	404-186110			10	1	C349
	404-186110-1			10	1	
	404-186110-3			10 - 6	2	
1AHC-1560-345-2517	404-186111			10 - 18	1	C 48
	404-186112			10 - 9	1	C 49
	404-186113			10 - 12	1	C 50
1AHC-1560-327-1170	404-186114			10 - 13	1	C 51
	404-186117			10 - 8	1	C133
1AHC-1560-040-6449	404-187011			63 - 30	2	D 3
1AHC-1560-040-6450	404-187011-2			9 - 71	2	
1AHC-1560-040-6451	404-187012			9 - 66	1	D 4
1AHC-1560-040-6454	404-187013			9 - 65	1	D 5
1AHC-1560-040-6458	404-187014-2			63 - 6	3	
1AHC-1560-040-6459	404-187015			63 - 9	1	D 6
	404-187015-8			63 - 11	1	
1AHC-1560-040-6461	404-187030			61 - 6	2	C350
1AHC-1560-040-6462	404-187030-2			18 - 32	3	
1AHC-1560-040-6463	404-187032			67	1	K225
	404-187032-10			67	1	
	404-187032-4			67	1	
	404-187032-6			67	1	
1AHC-1560-040-6464	404-187033			67	1	K226
	404-187033-10			67	1	
	404-187033-4			67	1	
	404-187033-6			67	1	
1AHC-1560-334-6029	404-187052			99 - 22	2	C136
1AHC-1560-434-7942	404-187053			99 - 19	1	C137
	404-187210-12			18 - 10	1	
	404-187210-20			18	1	
	404-187210-8			18 - 11	1	
	404-187231-2			63 - 27	1	
	404-187402			27 - 24	2	C 98
	404-187511			99 -129	2	
	404-187512			67	2	C 98
	404-187668			52 - 83	2	C 99
1AHC-1560-563-7511	404-187717			52 - 84	2	D 9
	404-187719			64	1	K241
	404-187720			64	1	K199
	404-187721			64	1	
1AHC-1560-532-8281	404-187722			64	1	K227
1AHC-1560-532-8282	404-187723			64	1	
1AHC-1560-532-8283	404-187724			64	1	
1AHC-1560-320-5335	404-187725			64	1	K183
1AHC-1560-335-6506	404-187726			52 - 86	2	D 10
1AHC-1560-335-6512	404-187727			64 - 25	1	D 11
	404-187729			52	2	D 12
	404-187729-2			52 - 93	4	
1AHC-1560-510-3644	404-187730			64 - 28	1	C139
1AHC-1560-694-3723	404-187731-2			64 - 23	1	
	404-187731-4			52 - 91	2	
1AHC-1560-694-6918	404-187732-12			52 - 88	2	
1AHC-1560-692-0946	404-187733			64 - 18	1	
1AHC-1560-694-3724	404-187735			52 - 92	2	D 15
1AHC-1560-304-2452	404-187739			64	1	D 16
1AHC-1560-346-9621	404-187739-2			64 - 24	1	
1AHC-1560-040-6467	404-187739-4			64 - 19	1	
	404-187739-6			64 - 20	1	
	404-187750			52	2	C353
	404-187803			29 - 25	1	
	404-187814			29 - 1	1	
	404-187818			27 - 14	2	D 20
	404-187822			27 - 32	2	D 21
	404-187822-1			27	2	
	404-187825			76 - 4	1	
	404-187830			72	1	
	404-187835			72	1	
	404-187840			72	1	C354
	404-187852			27 - 42	3	C146
	404-187853			27 - 67	2	C105
	404-187884			28 - 7	1	

STOCK NUMBER	PART NUMBER	SOURCE CODE		FIGURE AND INDEX NO.	QTY. PER ARTICLE	MICRO-FILM INDEX
1AHC-1560-040-6469	404-187887			27	2	C147
1AHC-1560-040-6470	404-187897			21 - 15	1	C110
1AHC-1560-040-6472	404-187899			21	1	
	404-187904			27 - 63	1	C111
1AHC-1560-698-9478	404-187905			27 - 57	1	
	404-187907			27 - 22	1	C112
	404-187908			27	2	
	404-187929			27 - 3	4	C149
1AHC-1560-662-9030	404-187937-6			27 - 38	6	
	404-187942			27 - 5	4	C131
	404-187948			27 - 10	1	C152
1AHC-1560-434-7955	404-187949			27 - 29	4	C116
1AHC-1560-692-0948	404-187992			27 - 54	1	C153
	404-187996			27	1	E134
	404-188005			24 -	1	
	404-188005-2			24 - 16	1	
	404-188005-3			24 - 17	1	
1AHC-1560-528-7965	404-188006			21 - 68	2	C118
	404-188008			28 - 25	1	C119
	404-188013			28 - 34	1	C120
	404-188014			28 - 42	1	C121
	404-188015			28 - 36	1	C122
	404-188016			28 - 44	1	C123
	404-188017			28 - 49	1	C124
	404-188018			28 - 29	1	C125
	404-188019			28 - 51	1	C126
	404-188020			28 - 31	1	C127
	404-188022			21 - 44	1	D 23
	404-188022-1			21	1	
	404-188024			21 - 41	2	C128
	404-188025			21 - 42	1	C129
	404-188025-1			21	1	
	404-188027			21 - 5	2	E136
1AHC-1560-532-8286	404-188027-2			22 - 18	2	
1AHC-1560-040-6474	404-188028			22 - 15	2	C355
1AHC-1560-532-8287	404-188036			22 - 14	2	
	404-188150			21 - 2	4	C157
	404-188400			21 - 1	1	
1AHC-1560-692-0949	404-188400-2			23 - 12	2	
	404-188400-3			21	1	
	404-188402			23 - 27	1	E139
	404-188402-1			23	1	
	404-188402-10			23	4	
	404-188402-2			23 - 28	2	
	404-188402-4			23 - 29	2	
	404-188402-8			23	4	
	404-188406-1			23 - 41	2	
	404-188412			23	2	C360
	404-188412-2			23 - 36	4	
	404-188413			23 - 32	4	C158
	404-188414			23 - 37	4	C159
	404-188415			23 - 23	2	
	404-188416			23 - 9	2	C160
	404-188417			23	2	D308
	404-188417-2			23 - 8	2	
1AHC-1560-327-1173	404-188422			21 - 35	2	C163
	404-188424			21 - 36	2	C130
	404-188425			21 - 40	2	C164
	404-188427			21 - 39	2	C362
	404-188432			23 - 40	2	C165
	404-188433			23	2	C364
	404-188434			23 - 6	2	C365
	404-188435			23 - 7	2	C489
	404-188436			23 - 5	2	C490
	404-188438			23 - 3	2	C492
	404-188442			23 - 30	4	C413
1AHC-1560-327-1174	404-188443			21 - 34	2	C494
1AHC-1560-662-5748	404-188444			21 - 8	2	C495
	404-188455			23 - 26	2	C496
1AHC-1560-335-6513	404-188456			23 - 25	2	C497
	404-188462			23 - 31	4	C414
	404-188464			21 - 65	2	C367
	404-188464-8			21	2	
1AHC-1560-694-3729	404-188468			21 - 69	1	C498
1AHC-1560-694-3730	404-188468-1			21	1	
	404-188470			32 - 11	1	D 29
	404-188473			21 - 58	2	C500
	404-188481			21 - 22	4	C503
	404-188482			21 - 17	1	C504
1AHC-1560-621-1598	404-188483			21 - 10	1	C505
	404-188483-1			21	1	
	404-188506			24	2	
	404-188507			24	2	
1AHC-1560-575-5178	404-188508			24 - 62	1	
	404-188540			21 - 71	2	C420
	404-188557			23 - 18	2	D 31
	404-188558			23 - 13	2	C507
	404-188559			23 - 15	2	C421
	404-188569			21 - 60	2	C508
	404-188590			25	1	D 32
	404-188612			30 - 9	2	
	404-188618			31 - 6	1	C422
1AHC-1560-327-1175	404-188619			31 - 10	1	C423
	404-188635			30	3	E142
	404-188638			30 - 37	4	C424

STOCK NUMBER	PART NUMBER	SOURCE CODE		FIGURE AND INDEX NO.	QTY. PER ARTICLE	MICRO-FILM INDEX
	404-188639			30 - 36	2	C511
1AHC-1560-040-6478	404-188656			30 - 50	1	C512
1AHC-1560-532-8290	404-188657			30 - 51	1	C425
	404-188658			30 - 19	2	C426
1AHC-1560-327-1176	404-188659			30 - 16	4	C513
1AHC-1560-348-8246	404-188660-2			30 - 62	1	
1AHC-1560-569-6292	404-188660-4			30 - 64	2	
1AHC-1560-569-6293	404-188660-6			30 - 63	2	
1AHC-1560-528-4388	404-188663			30 - 53	1	C427
	404-188664			32 - 21	2	
	404-188665			30 - 55	2	E143
	404-188669			30 - 65	2	C515
1AHC-1560-434-7977	404-188675			30 - 23	2	E144
	404-188677			30 - 40	2	C517
1AHC-1560-694-3733	404-188678			30 - 13	2	C518
1AHC-1560-029-1190	404-188680			30 - 22	2	
	404-188683			30 - 30	2	C430
1AHC-1560-528-5139	404-188687			30 - 25	2	C520
	404-188694			30 - 41	4	C433
	404-188696			32 - 1	1	K184
1AHC-1560-662-7745	404-188698			30 - 26	2	C434
1AHC-1560-434-7983	404-188699			30 - 35	2	C524
	404-188740			30 - 12	1	
1AHC-1560-092-3654	404-188910			24	1	
	404-188913			24 - 63	1	
	404-188950			24 - 25	1	C371
	404-188951			24 - 35	1	C435
	404-188957			24 - 32	1	D 35
	404-188958			24 - 33	1	D 36
1AHC-1560-505-8175	404-188959			25 - 2	1	
1AHC-1560-345-2518	404-189008			40 - 27	2	
1AHC-1560-520-0468	404-189009			40 - 28	2	
	404-189059			51 - 65	1	C526
	404-189059-1			51	1	
	404-189064			51 - 63	2	C527
1AHC-1560-346-9622	404-189074			40 - 46	8	
	404-189088			40 - 42	1	
	404-189089			40 - 43	1	
	404-189096			38 - 34	4	C372
1AHC-1560-575-5167	404-189102			33 - 9	6	C528
	404-189468			50 - 44	1	C440
1AHC-1560-219-3828	404-189507			48 - 5	4	C441
1AHC-1560-216-1421	404-189508			48 - 3	2	
1AHC-1560-216-1422	404-189509			48 - 69	2	
	404-189534			51 - 22	1	C529
	404-189534-1			51	1	
	404-189572			50 - 89	1	C442
	404-189573			50 - 92	1	C443
	404-189574			50 - 91	1	C444
	404-189575			50 - 90	1	C445
	404-189576			50 - 96	1	C446
	404-189577			50 - 99	1	C447
	404-189578			50 - 98	1	C451
	404-189579			50 - 97	1	C452
1AHC-1560-040-6479	404-189597			47 - 16	4	C453
	404-189599			48 - 61	1	C454
	404-189669			59 - 44	1	C530
1AHC-1560-612-3855	404-189671			46 - 25	1	C455
1AHC-1560-327-1179	404-189704			59 - 49	1	C531
1AHC-1560-692-0951	404-189759			59 - 50	1	C456
1AHC-1560-040-6481	404-189776			59 - 46	1	C449
	404-189803			43 - 24	5	C450
1AHC-1560-323-2389	404-189804			56 - 20	2	
	404-189807			55 - 34	2	C533
	404-189835			57 - 35	1	C457
	404-189860-10			13 - 75	1	
	404-189860-11			13	1	
	404-189860-15			13	1	
	404-189860-16			13 - 65	1	
	404-189860-20			13 - 66	1	
	404-189860-21			13	1	
	404-189860L			13	1	E145
	404-189860R			13	1	E145
	404-189900			33	1	
	404-189907			33	1	
	404-189908			33	1	
1AHC-1560-029-1198	404045			75 - 2	2	
1AHC-1560-694-6922	407-183152-1			104 - 3	1	
	407-183153			83 - 32	1	C459
	407-183155			83 - 34	1	C460
	407-183156****			83	2	C461
	407-183157			83 - 35	1	C462
	407-183158			83 - 36	1	C463
	407-183159			83 - 37	1	C464
	407-183162			83 - 39	1	C465
	407-183853			52	2	D309
	407-183854			52 - 5	2	C534
	407-183877			81 - 34	1	C466
	407-183878			81 - 35	1	D310
	407-184450			2	3	D481
1AHC-1560-692-0952	407-184737			97 -212	2	C535
	407-186000-2			8 - 23	1	
	407-186000-4			8 - 15	1	
	407-186000-5			8 - 16	1	
	407-187016-6			62 - 4	2	

STOCK NUMBER	PART NUMBER	SOURCE CODE		FIGURE AND INDEX NO.	QTY. PER ARTICLE	MICRO-FILM INDEX
	407-187106			62 - 1	1	D 40
1AHC-1560-694-6924	407-187106-2			62	1	
1AHC-1560-694-6925	407-187732-2			64 - 16	1	
	407-187803			64	1	D 41
1AHC-1560-575-5168	407-187803-2			64 - 12	1	
1AHC-1560-520-0470	407-189072			40 - 57	1	
1AHC-1560-524-2031	407-189072-1			40 - 58	1	
	407-189657			50 - 38	1	C468
	407-189670			43 - 2	1	C469
	407-189671			43 - 34	1	C470
	407-189687			59 - 8	1	
	407-189688			59 - 9	1	C472
	407-189691			46 - 16	1	F339
	407-189692			46 - 7	1	C473
	407-189693			46 - 23	1	C474
	407-189694			46 - 18	1	C475
	407-189695			46 - 10	1	C476
	407-189697			46 - 17	1	C477
	407-189698			46 - 8	1	C478
	407-189699			46 - 24	1	C479
	407-189704			47 - 4	4	C536
1AHC-1560-040-6484	407-189705			47 - 12	1	C537
1AHC-1560-040-6486	407-189706			47 - 6	1	D 39
1AHC-1560-040-6487	407-189706-1			47	1	
1AHC-1560-040-6496	407-189709			47 - 14	1	C538
1AHC-1560-040-6497	407-189710			47 - 1	2	C539
	407-189725			46 - 26	1	C480
	407-189726			46 - 11	1	C481
	407-189727			46 - 19	1	C482
	407-189728			59	1	C483
	407-189729			59	1	C484
	407-189732			59 - 33	1	
	407-189733			59 - 34	1	C485
	407-189747			59 - 39	1	C486
	407-189753			43 - 5	1	C487
	41A4178			83 - 22	1	
	41A9177			99 - 62	2	
	414-189741			55 - 16	2	
	42/39			54 - 54	7	
	42A11521			77 - 1	2	
	42A13995			77	2	
	42A6504			99 - 56	1	
	42B3748			92 - 5	1	
	42088			24 - 64	1	
	4300			40 - 41	13	
1AHC-1560-515-7670	437-180028			40 - 65	2	
	437-183038			3	1	
	437-184738			97 -222	2	D312
	4500SA-1			27 - 52	2	
	457			101 - 26	1	
	4570			5 - 24	2	
	4576-36-10			12 - 14	3	
	4584-11-10			9 - 2	1	
	4584-11-20			19 - 24	1	
	4584-11-60			9 - 1	1	
	46A1135-524			34 - 1	108	
	4707-10			17 - 25	1	
	4707-2-10			9 - 61	1	
	4718-1-3			19 - 23	AR	
	4757			78	2	
	4780-1			78 - 29	2	
	49A6549-1-2			97 -155	5	
	49A6549-1-3			97	4	
	49B6768-10			94 -108	22	
	49B6768-15			94 -109	2	
	49B6768-20			94 -110	4	
	49B6768-25			94 -111	2	
	49B6768-35			97 -146	1	
	49B6768-5			94 -107	16	
	49C7573			95 - 5	2	
	49380-1			33 - 16	152	
	50-000085			2 - 14	2	
	50D3770			99 -121	11	
	5051-2-3/8D			71 - 83	1	
	50727			79 - 29	4	
	51A-66			103 - 8	2	
	5100			94 -163	3	
	52-022-094-0437			16	4	
	52-022-094-0750			94 - 67	4	
	530884G			21	2	
	530884M			21 - 30	2	
	530886M			21 - 31	2	
	530886SG			21	2	
1AHC-1560-181-0624	54-189216			33 - 40	2	
	54C109			95 - 20	2	
	54H19650			99 -119	11	
	54884C			48 - 1	4	
	55SAA191			78 - 38	2	
	55SAA193			78 - 39	2	
	555-3685			43 - 13	2	
	59-022-094-0750			54 - 33	3	
	6-140			54 - 50	2	
	6-45			52	16	
	60344			24 - 66	1	
	6046H39A			92 - 37	1	

STOCK NUMBER	PART NUMBER	SOURCE CODE		FIGURE AND INDEX NO.	QTY. PER ARTICLE	MICRO-FILM INDEX
	6082			67 - 36	4	
	6143			4 - 17	1	
	634-183200			99 - 7	1	
	634-183202			99	1	
	634-183460			99 - 8	1	
	634-183461			99 - 9	1	
	634-183462			99 - 10	1	
	64118			99 - 11	4	
	644-180034			105 - 13	1	K 14
	644-180037			94 -165	3	
	644-180442			99 -107	1	K 64
	644-180541			94	3	
	644-180541-2			94 -164	3	
	644-180628			94	1	
	644-180628-1			94	1	
	644-180638			105 - 1	1	
	644-180746			94	1	
	644-180837			94	1	
	644-183103-2			101 - 38	1	
	644-183103-30			101 - 43	1	
1AHC-1560-035-1659	644-183109			101 - 21	1	K 92
	644-183161			99 -102	1	K 93
	644-183275			99	1	
	644-183451			105 - 5	1	K 73
	644-183461-12			105 - 7	1	
1AHC-1560-092-3655	644-183461-14			105	1	
	644-183461-2			105 - 8	1	
	644-183461-3			105 - 9	1	
	644-183603			106 - 3	1	
	644-184441			101 - 42	1	
	644-184450			2	3	K 97
	644-184722			77 - 34	2	D182
	644-187811			29 - 8	1	D185
	644-187815			29 - 9	1	
	644-187944			27 - 7	4	
	644-188660			30 -	1	E148
	644-189056-8			52 - 24	4	
	644-189656			48 - 2	4	
1AHC-1560-219-3829	644-189657			48	6	
	644-189696			50 - 94	1	
	6442565			71	1	
	644681			71 -169	1	
	6531A-15*			40 - 2	4	
	6531A-16*			40	4	
	656767			18 - 47	1	
	66166-12			40 - 45	1	
	664543			18 - 46	1	
	664-180457			99 -106	1	
	664-180460			99	1	
	664-183165			99 -105	1	
	664255			94 -193	1	
	6442565			71	1	
	668-3-8FR			100 - 38	1	
	68-702780-C			64 - 1	1	
	6906			38 - 22	2	
	694-180009			97 - 36	1	D 38
	694-180011			78 - 41	2	
	694-180012			97 - 56	1	
	694-180015			78 - 40	2	
	694-180016			97 -132	1	K 16
	694-180017			95 - 26	1	D188
	694-180018			95	1	D189
	694-180019			53 - 16	1	D236
	694-180020			91 -	1	
	694-180021			97 -134	1	K 17
	694-180023			31 - 18	1	
	694-180024			94 -173	1	D190
	694-180025			94	1	
	694-180027			92 - 39	1	D191
	694-180028			92	1	
	694-180029			97 -136	1	K 18
	694-180030			97 -170	1	K 19
	694-180032			99 - 85	1	K 62
	694-180035			97 -148	1	D238
	694-180039			97 -140	1	
	694-180040			97	1	
	694-180042			94 -104	1	
	694-180045			95 - 28	1	D194
	694-180049			97 - 34	1	D195
	694-180050			95	1	D196
	694-180053			94 - 99	1	D197
	694-180056			97 -124	2	D199
	694-180057			99 - 74	1	D243
	694-180059			98 - 21	1	D156
	694-180060			98 - 30	1	D201
	694-180063			92 - 87	9	D202
	694-180066			99	1	D245
	694-180069			99 - 75	1	D246
	694-180070			4 - 39	1	D204
	694-180074			52 - 73	2	D206
	694-180075			52	2	D207
	694-180081			99	1	
1AHC-1560-532-8294	694-180082			99 - 38	2	
	694-180083			105 - 24	1	K 20
	694-180085			48 - 70	1	D213

STOCK NUMBER	PART NUMBER	SOURCE CODE		FIGURE AND INDEX NO.	QTY. PER ARTICLE	MICRO-FILM INDEX
	694-180086			86 - 53	1	
	694-180089			97 -187	1	D215
	694-180092			95 - 3	2	D247
	694-180103			53 - 18	1	K187
	694-180111			95	1	
	694-180113			29 - 2	1	
	694-180117			95	1	
	694-180191			23	1	
	694-180360			2	1	D327
	694-180360-1			4	1	
	694-180361			4 - 37	1	D328
	694-180362			4 - 36	1	
	694-180364			4 -	1	D251
	694-180367			4	1	D221
	694-180367-2			4 - 46	3	
	694-180369			4 - 40	1	D223
	694-180370			4 - 43	1	
	694-180430			90 -	1	E150
	694-180430-8			90 - 6	2	
	694-180440			91 - 1	2	D252
	694-180450			86 - 66	9	
	694-180456			99 -108	1	K 82
	694-180470			86	1	
	694-180471-1			86 -111	1	
	694-180471-17			86 - 61	1	
	694-180471-21			86 -109	1	
	694-180471-25			86 - 34	1	
	694-180471-29			86 - 33	1	
	694-180471-33			86 - 35	1	
	694-180471-37			86 - 36	1	
	694-180471-41			86 - 37	1	
	694-180471-45			86 - 38	1	
	694-180471-49			86 - 28	1	
	694-180471-5			86 - 60	1	
	694-180471-53			86 - 29	1	
	694-180471-57			86 - 30	1	
	694-180471-61			86 - 32	1	
	694-180471-65			86 - 31	1	
	694-180471-9			86 -112	1	
	694-180474			86 - 91	1	
	694-180475			86 - 62	6	
	694-180476			86 - 63	1	
	694-180478			86 -101	1	D330
	694-180480			86 -	1	
	694-180480-1			86 - 64	1	
	694-180481-12			86 - 15	1	
	694-180481-16			86 - 16	1	
	694-180481-20			86 - 17	1	
	694-180481-24			86 - 18	1	
	694-180481-28			86 - 20	1	
	694-180481-32			86 - 25	1	
	694-180481-36			86 - 24	1	
	694-180481-4			86 - 27	1	
	694-180481-40			86 - 23	1	
	694-180481-44			86 - 19	1	
	694-180481-48			86 - 21	1	
	694-180481-52			86 - 22	1	
	694-180481-56			86 - 88	1	
	694-180481-60			86 - 86	1	
	694-180481-64			86 - 85	1	
	694-180481-68			86 - 57	1	
	694-180481-8			86 - 26	1	
	694-180482-12			86 - 98	1	
	694-180482-16			86 - 72	1	
	694-180482-20			86 - 80	1	
	694-180482-28			86 - 73	1	
	694-180482-32			86 - 74	1	
	694-180482-36			86 - 81	1	
	694-180482-4			86 - 58	1	
	694-180482-40			86 - 82	1	
	694-180482-44			86 -102	1	
	694-180482-48			86 -103	1	
	694-180482-52			86 -105	1	
	694-180482-8			86 - 71	1	
	694-180502			86 - 5	6	D449
1AHC-1560-568-3569	694-180503			86 - 3	6	
	694-180503-2			86	6	
	694-180510			86 - 11	1	D333
	694-180511			86 - 7	1	D258
	694-180512			86 - 9	1	D259
	694-180513			86 - 13	1	D334
	694-180517			94	2	
	694-180531			94	1	
	694-180531-2			94 -131	1	
	694-180533			94 -134	1	D444
	694-180535			94 -130	1	D445
	694-180539			94	1	D446
	694-180540			94 -	1	
	694-180540-9			94	1	
	694-180541-1			94 -	1	D447
	694-180546			5	1	D451
1AHC-1560-532-8295	694-180548			5 - 22	2	D453
	694-180550			92	1	E152
	694-180550-1			92	1	
	694-180551			92	1	E153
	694-180551-1			92	1	
	694-180554			94 -102	1	D338
	694-180555			96 -	1	E154
	694-180555-1			96	1	
	694-180555-4			96	1	
	694-180555-5			96	1	
	694-180555-7			96 - 1	1	
	694-180555-8			96	1	
	694-180556			96	1	D340
	694-180556-1			96	1	
	694-180556-2			96	1	
	694-180556-3			96 - 16	1	
	694-180556-4			96 - 17	2	
	694-180556-6			96 - 24	2	
1AHC-1560-035-1663	694-180559			96	2	D456
	694-180559-2			96 - 14	2	
1AHC-1560-035-1664	694-180560			96	4	D457
	694-180561			94	1	D262
	694-180564			94 -152	2	D264
1AHC-1560-621-1622	694-180568			96 - 47	4	K209
	694-180570-4			94 -126	1	
	694-180570-5			94 -127	1	
	694-180571			95 - 29	1	E156
	694-180571-1			95	1	
	694-180571-13			86 -108	1	
1AHC-1560-575-5169	694-180572			95 - 2	1	D458
1AHC-1560-575-5170	694-180572-1			95	1	
	694-180590			92 -	1	E157
	694-180590-2			92 - 44	1	
	694-180590-4			92	1	
	694-180591-6			92 - 33	1	
	694-180591-8			92	1	
	694-180600			91	1	K259
	694-180606			94 -153	2	D265
	694-180607			94	1	E158
	694-180614			94 -113	1	D268
	694-180615			94 -114	1	D269
	694-180616			94	1	D459
	694-180616-2			94 -106	1	
	694-180616-6			94	1	
	694-180617			94	1	D460
	694-180617-2			94 -103	1	
	694-180618			97	1	E159
	694-180619			97	1	D461
	694-180620			97	1	
	694-180621			97	1	K102
	694-180622			97	1	K103
	694-180623			97 -110	1	D343
	694-180624			94	1	D462
	694-180626			94	1	
	694-180630			99 -	1	E160
	694-180632			99	1	D465
	694-180632-2			99 - 57	1	
	694-180633			94	1	D466
	694-180634			94	1	E161
	694-180634-1			94	1	
	694-180635			104	1	E162
	694-180636			92	1	
	694-180637			92 - 32	1	
	694-180638			94	1	D345
	694-180639			94	1	E163
	694-180640			99	1	K104
	694-180641			94	1	D467
	694-180641-1			94	1	
	694-180646			97	1	D468
	694-180647			97	1	E164
	694-180648			98	1	E165
	694-180649			98	1	
	694-180651			97	1	
	694-180652			97	1	E166
	694-180653			97	1	D470
	694-180654			97	1	D471
	694-180655			97	1	D346
	694-180656			97	1	D347
	694-180657			97	1	E167
	694-180658			97	1	D472
	694-180659			97	1	E168
	694-180661			97	1	D473
	694-180662			98	1	D474
	694-180662-1			98	1	
	694-180663			98	1	D475
	694-180663-1			98 -	1	
	694-180664			97	1	D477
	694-180666			98	1	D476
	694-180667			97	1	D478
	694-180669			91	1	E171
	694-180670			97 -	1	E172
	694-180670-7			97	1	
	694-180671			97	1	
	694-180671-16			97 -192	1	
	694-180671-2			97	1	
	694-180671-4			97	1	
	694-180671-6			97	1	
	694-180672			97 -205	1	
	694-180673			97 -206	1	

STOCK NUMBER	PART NUMBER	SOURCE CODE		FIGURE AND INDEX NO.	QTY. PER ARTICLE	MICRO-FILM INDEX
	694-180674			97 -208	2	
	694-180676			97 - 50	1	D479
	694-180678			97	1	D349
	694-180678-2			97 -139	2	
	694-180679			97	1	D350
	694-180679-2			97 -142	1	
	694-180680			97 -147	1	D227
	694-180682			98	1	E174
	694-180684			98 - 47	2	
	694-180686			97 - 37	1	D486
	694-180688			97 - 89	1	D270
	694-180689			97 -	1	D488
	694-180689-2			97 - 33	1	
	694-180690			97	1	E175
	694-180695			97	1	E176
	694-180696			97 -	1	D489
	694-180697			97	1	D490
	694-180698			97	1	D491
	694-180700			91	1	
	694-180701			97	1	
	694-180702			89 - 7	1	D274
	694-180704			97	1	
	694-180706			97	1	D494
	694-180707			97	1	D389
	694-180708			97 -	1	D495
	694-180709			97	1	D390
	694-180710			97	1	D391
	694-180711			97 -152	1	D496
	694-180712			17	1	D392
	694-180713			18	1	D393
	694-180715			97 -122	2	D276
	694-180718			97	1	D279
	694-180718-2			97 - 3	1	
	694-180719			94	1	D497
	694-180719-2			94 - 85	1	
	694-180720			94	1	D280
	694-180721			94	1	D281
	694-180722			94	1	D282
	694-180722-2			94 - 98	1	
	694-180724			92 - 48	1	D284
	694-180725			97	1	E177
1AHC-1560-536-6369	694-180726			10 - 43	1	D394
	694-180727			18 - 48	1	
	694-180728-3			94	1	
	694-180731			92	1	D498
	694-180732			92	1	D499
	694-180733			94	1	D397
1AHC-1560-532-8297	694-180735			96	4	D398
	694-180736			92 - 35	1	D399
	694-180737			94	1	E179
	694-180738			92	1	D400
	694-180739			92	1	D401
	694-180740-1			95 -	1	
1AHC-1560-035-1665	694-180741			96	1	
1AHC-1560-332-0744	694-180741-2			96 - 39	2	
	694-180742			97 - 9	1	D286
	694-180743			97	1	D287
	694-180744			97 - 7	1	D288
	694-180745-1			95	1	
	694-180749			92 - 45	1	D290
	694-180750			94	1	D291
1AHC-1560-035-1666	694-180751			96	1	D503
	694-180751-2			96	2	
	694-180752			97	1	F170
	694-180753			97 - 8	1	D292
1AHC-1560-035-1667	694-180754			96	1	D504
1AHC-1560-035-1668	694-180755			96	1	D505
	694-180756			94	1	D293
	694-180758			92	1	D506
	694-180759			92	1	D507
	694-180760			97	1	D402
	694-180760-2			97 -161	1	
	694-180761			97	1	D403
	694-180763			97 -186	1	D405
	694-180764			92	1	D508
	694-180765			92	1	D509
	694-180766			18	1	D294
	694-180767			17 -	1	D295
	694-180768			92	1	
	694-180770			94	1	D296
	694-180771			94	1	D297
	694-180772			92 - 73	1	D298
1AHC-1560-040-6509	694-180774			98 - 10	1	D300
1AHC-1560-040-6510	694-180774-1			98 - 11	1	
1AHC-1560-040-6511	694-180775			98 - 12	4	D301
	694-180778			97 -154	1	D407
	694-180779			97 -153	1	D408
	694-180782			97	1	E180
	694-180782-1			97	1	
	694-180787			98 - 16	1	
	694-180788			98 - 45	1	D303
	694-180789			98 - 20	2	D410
	694-180790			98	1	D411
	694-180791			98	1	
	694-180792			98 - 24	2	D304

STOCK NUMBER	PART NUMBER	SOURCE CODE		FIGURE AND INDEX NO.	QTY. PER ARTICLE	MICRO-FILM INDEX
	694-180793			98 - 18	1	D305
	694-180795			98	1	D512
	694-180795-2			98 - 41	1	
1AHC-1560-304-6347	694-180797			98 - 4	1	D306
	694-180798-1			94 - 73	1	
	694-180798-3			94	1	
	694-180799-1			97 -113	1	
	694-180799-3			97 -114	1	
	694-180799-5			97 -115	1	
	694-180799-7			97 -116	1	
	694-180800			91	1	K108
	694-180801			94	1	K112
	694-180802			94	1	K115
	694-180802-1			94	1	
	694-180803			94	1	K 67
	694-180803-1			94	1	
	694-180804			97	1	K116
	694-180805-1			94	1	
	694-180805-2			94	1	
	694-180808			97	1	K118
	694-180809			97	1	K 85
	694-180810			97	1	K 68
	694-180811			97	1	K 86
	694-180812			97	1	K119
	694-180813			94	1	K 69
	694-180814*			97	1	D414
	694-180815			97	1	D514
	694-180817			78 - 24	2	D307
	694-180820			89	1	D515
1AHC-1560-040-6512	694-180820-6			89 - 4	1	
1AHC-1560-040-6513	694-180820-8			89 - 6	1	
	694-180824*			97	1	D416
	694-180825			97	1	D417
	694-180825-1			97 - 82	1	
	694-180826			97	1	K120
	694-180832			94	1	
	694-180834			97	1	K 87
	694-180838			97	1	
	694-180838-1			97	1	
1AHC-1560-524-2032	694-180839			97 - 52	1	K 70
	694-180840			97	1	K 89
	694-180841			97	1	K 90
	694-180843			97	1	K150
	694-180844			97	1	K151
	694-180845			97	1	K163
	694-180846			94	1	K152
	694-180847			97	1	K153
	694-180848			94	1	
	694-180849			94	1	K164
	694-180849-3			94	1	
	694-180849-5			94	1	
	694-180850			94 -128	1	
	694-180851			95	1	
	694-180852			97	1	K154
	694-180853			97	1	K165
1AHC-1560-341-6224	694-180856-5			92	1	
1AHC-1560-341-6225	694-180856-7			92	1	
	694-180860			92	1	K130
	694-180860-2			92	1	
	694-180861			94	1	
	694-180862			94 -129	1	
	694-180863			95	1	
	694-180864			95	1	K132
	694-180865			95	1	
	694-180866			94	1	
	694-180867			97	1	
	694-180868-1			94	1	
	694-180868-3			94	1	
	694-180868-5			94	1	
	694-180869			97	1	D517
	694-180870			97	1	K168
	694-180870-1			97 -168	1	
	694-180871			97	1	K169
	694-180871-1			97 -169	1	
	694-180872			97	1	K170
	694-180873			97 - 73	1	D418
	694-180874			94 -139	1	K144
	694-180875			94 -138	1	K145
	694-180876			97	1	F337
	694-180877			94	1	D230
	694-180888			94	1	F360
	694-180889			94	1	
	694-180890			98	2	
	694-180891			97 -131	3	
	694-180892			97 -130	1	
	694-180893*			97 - 97	1	
	694-180894**			97	1	D420
	694-180895			97 - 95	1	D421
	694-180898			97 -106	1	D422
	694-180901			94 -183	2	K210
	694-180903			92 - 84	1	K246
	694-180905			97 - 45	1	
1AHC-1560-307-0663	694-180921			54 - 55	1	K211
1AHC-1560-307-0664	694-180922			53 -123	1	
	694-180923			54 - 27	1	K212

STOCK NUMBER	PART NUMBER	SOURCE CODE		FIGURE AND INDEX NO.	QTY. PER ARTICLE	MICRO-FILM INDEX
	694-180924			92 - 85	1	
	694-180925			92	1	
	694-180926			92 - 83	1	
	694-180927			92	1	
	694-180929			94 -192	1	K247
1AHC-1560-341-6226	694-180933-1			92 - 28	1	K236
1AHC-1560-341-6227	694-180934-1			92	1	K237
1AHC-1560-340-4347	694-180937			96 - 2	1	
	694-180937-1			96 - 4	2	
1AHC-1560-340-4348	694-180939			96	1	
	694-180939-1			96	2	
1AHC-1560-524-2033	694-180940			54 - 9	1	
	694-180980			10	1	
1AHC-1560-302-3055	694-180993			94 -121	1	D423
	694-181100			13 -	1	E186
	694-181100-1			13	1	
1AHC-1560-327-1181	694-181108			58 - 38	2	D368
1AHC-1560-327-1182	694-181109			58 - 35	2	D369
	694-181174			13	1	E305
	694-181174-1			13	1	
	694-181176			13 - 29	2	D424
	694-181176-1			13	1	
	694-183000-14			6 - 4	1	
	694-183000-6			4 - 19	1	
	694-183100			99 - 2	1	E191
	694-183101			99 - 3	1	
1AHC-1560-035-1669	694-183103			101 - 47	1	E192
	694-183104			101	1	
	694-183105			101 - 6	1	K134
	694-183105-17			101 - 10	1	
	694-183105-21			101 - 9	1	
	694-183105-27			101 - 8	1	
	694-183120			99 - 1	1	E193
	694-183121			100 - 62	1	D371
	694-183137			100 - 2	1	E194
1AHC-1560-035-3711	694-183138			100 - 1	1	E195
	694-183138-6			100	1	
	694-183150			104	1	K171
	694-183152			104	1	
	694-183168			84 - 4	2	K191
	694-183169			84 - 1	1	K192
	694-183170			84 - 29	1	K193
1AHC-1560-024-4123	694-183175-1			85 - 15	1	
1AHC-1560-024-4124	694-183175-13			85 - 14	1	
1AHC-1560-024-4125	694-183175-17			85 - 6	1	
1AHC-1560-024-4126	694-183175-21			85 - 9	1	
	694-183175-25			84 - 22	1	
	694-183175-29			84 - 9	1	
	694-183175-33			84 - 24	1	
	694-183175-37			84 - 7	1	
	694-183175-41			84 - 26	1	
	694-183175-45			84 - 5	1	
	694-183175-5			85 - 7	1	
	694-183175-9			85 - 10	1	
	694-183185			83 -	1	
	694-183186			84 - 10	1	K194
	694-183188			84 - 14	1	K215
	694-183189			84 - 13	1	K216
	694-183190			84 -	1	K263
	694-183195-1			85 -	1	
	694-183195-2			85	1	
	694-183200-2			104 - 16	1	
	694-183200-4			104 - 17	1	
	694-183200-6			104 - 18	1	
	694-183202-1			104	1	
	694-183202-3			104	1	
	694-183202-5			104	1	
	694-183460-5			105 - 4	1	
	694-183460-7			105 - 6	1	
	694-183461-1			105 - 15	1	
	694-183462-1			105 - 22	1	
	694-183462-2			105 - 21	1	
	694-183462-3			105 - 19	1	
	694-183462-5			105 - 18	1	
1AHC-1560-040-6515	694-183465			105 - 3	1	
	694-183600			99 -112	1	K138
	694-183601			99 - 86	1	K139
	694-183601-1			106 - 1	1	
	694-183601-3			106	1	
	694-183602			106 - 6	1	K172
	694-183603			106 - 27	2	
	694-183605			106 - 25	1	K173
	694-183610			106 - 10	1	
	694-183725			78 - 15	5	
1AHC-1560-040-6517	694-183801-22			79 - 37	1	
	694-183801-28			79 -	1	
	694-183801-4			78 - 1	2	
	694-183802			82 -	1	E198
	694-183803			78 - 2	2	D427
	694-183804			78 - 3	2	D428
	694-183805			78 - 8	2	D374
	694-183806			78 - 5	1	D429
	694-183807			78 - 6	2	D430
	694-183808			78 - 4	2	D431
	694-183809			78	2	

STOCK NUMBER	PART NUMBER	SOURCE CODE		FIGURE AND INDEX NO.	QTY. PER ARTICLE	MICRO-FILM INDEX
	694-183821			81 - 48	1	
	694-183822-1			82 - 4	1	
	694-183822-2			82	1	
	694-183840			69 -	1	E199
	694-183850			81	1	E309
	694-183851			81 -	1	E308
	694-183852			52	1	E200
	694-183852-18			52 - 2	2	
	694-183852-19			52 - 3	1	
	694-183853			81 - 1	1	E310
	694-183855			81 - 41	1	D356
1AHC-1560-692-0956	694-183857			52 - 46	2	D383
	694-183860			52	1	E201
	694-183861			53	1	K266
	694-183862			81 - 29	1	E311
	694-183877			94	1	
1AHC-1560-304-2457	694-183877-5			94	1	
1AHC-1560-307-0665	694-183878			94	1	
1AHC-1560-307-0667	694-183879			94	1	
	694-183881			94 - 68	1	
	694-183884-16			44 - 24	1	
	694-183884-20			44 - 26	1	
	694-183884-24			44 - 27	1	
	694-183884-28			44 - 20	1	
	694-183884-32			80 - 9	1	
	694-183884-44			80 - 32	1	
	694-183884-48			80 - 29	1	
	694-183884-52			82 - 6	1	
	694-183884-56			82 - 7	1	
	694-183884-8			80 - 33	1	
1AHC-1560-304-2458	694-183885			94 - 66	2	
1AHC-1560-307-0668	694-183886			94 - 65	1	
	694-183888			44 - 12	1	D352
	694-183890			44 -	1	E202
	694-183895			45 - 6	1	
	694-183950			87	1	
	694-183956			87 -	1	K268
	694-183956-4			87	1	
	694-184000			2 -	1	E205
	694-184000-14			2	1	
	694-184001			2	1	K140
	694-184400			57 -	1	
	694-184410			57 - 39	1	E315
	694-184411			57 - 46	1	D523
1AHC-1560-335-6514	694-184413			57 - 50	1	D542
1AHC-1560-040-6520	694-184414			57 - 48	1	D543
	694-184452			2	1	
	694-184453			6 - 17	4	
	694-184454			6 - 19	2	
1AHC-1560-575-5173	694-184456			6 - 6	1	D545
	694-184456-1			6 - 7	1	
	694-184660			2	1	E213
	694-184720			77 -	1	E214
	694-184721			77 - 29	1	D360
	694-184722			77 - 15	1	D361
	694-184723			77 - 30	1	D362
	694-184724			77 - 12	1	D363
	694-184725			77 - 14	1	D364
	694-184726			77 - 28	1	D365
	694-184727			77 - 31	1	D366
	694-184728			77 - 25	1	
	694-184729			77 - 20	1	
	694-184730			77	1	K126
	694-184731			106 - 31	1	
	694-184740			77 - 36	1	
	694-184743			77 - 11	1	D367
1AHC-1560-692-0958	694-184812			99	1	K 98
	694-184813			99 - 78	1	
	694-185650			2 - 4	2	
1AHC-1560-335-6515	694-185650-36			6 - 13	1	
1AHC-1560-335-6516	694-185650-38			6 - 14	1	
	694-185650-40			6	1	
1AHC-1560-575-5174	694-185653			6 - 5	1	E316
	694-185896-2			33 - 14	2	
1AHC-1560-335-6517	694-185896-4			33 - 15	4	
1AHC-1560-335-6518	694-185899			33 - 27	2	D548
	694-185910-20			33 - 17	2	
1AHC-1560-338-1483	694-185910-24			33 - 19	2	
	694-185910-36			33 - 13	1	
	694-185910-37			33	1	
1AHC-1560-327-1185	694-185910-38			33 - 21	2	
1AHC-1560-327-1186	694-185910-39			33 - 22	2	
	694-185910-42			33	1	
1AHC-1560-341-6229	694-185910-43			33	1	
1AHC-1560-692-0959	694-185950			16 - 7	1	D549
1AHC-1560-692-0960	694-185950-1			16 - 8	1	
	694-185951			16 -	1	E216
	694-185951-1			16	1	
1AHC-1560-570-1808	694-185953			16	2	
	694-185953-3			16	4	
1AHC-1560-317-0626	694-185955			16 - 10	2	D527
1AHC-1560-572-0611	694-185955-2			16 - 13	4	
	694-185955-4			16 - 14	4	
	694-185956			16 - 12	4	D550
	694-185958			16 - 19	2	D551

STOCK NUMBER	PART NUMBER	SOURCE CODE		FIGURE AND INDEX NO.	QTY. PER ARTICLE	MICRO-FILM INDEX
1AHC-1560-317-0627	694-185959			16 - 16	2	D564
1AHC-1560-317-0628	694-185960			16 - 15	4	D565
	694-186000			8 -	1	E217
1AHC-1560-307-9715	694-186040			9 - 50	1	D528
	694-186050			9	1	E219
	694-186050-600			8 - 1	1	
	694-186052-10			10	1	
1AHC-1560-575-5179	694-186052-7			10 - 35	10	
1AHC-1560-520-4523	694-186052-9			10 - 34	1	
	694-186175			8	1	K270
	694-186278-1			12	1	
1AHC-1560-524-2036	694-186350-1			8	1	
1AHC-1560-524-2037	694-186350-4			8	1	
	694-186351			12 - 28	1	K220
	694-187000			61 -	1	E221
	694-187001			61	1	
	694-187002			65 - 13	1	
	694-187003			61	1	
	694-187031			69 - 29	2	E222
1AHC-1560-692-0962	694-187050			99	1	
	694-187051			99 - 35	1	D554
1AHC-1560-568-6884	694-187052			99 - 25	1	E224
1AHC-1560-568-6885	694-187055			99 - 21	1	D537
	694-187059			99 - 26	1	D558
	694-187061			99 - 28	1	F439
1AHC-1560-099-2409	694-187062			99 - 30	1	D559
	694-187063			99 - 29	1	D560
	694-187064			99 - 31	1	D561
	694-187065			99 - 34	1	D538
	694-187200			71 -	1	E225
	694-187231			71 - 63	1	F440
	694-187232			63	1	
	694-187234			71 - 51	1	F441
	694-187728			64	1	E320
	694-187729			64	1	K249
	694-187730			64	1	
1AHC-1560-040-6522	694-187731			64 - 5	1	F183
	694-187732			64 - 4	1	F442
	694-187734			52 - 90	2	D540
1AHC-1560-327-1187	694-187744			64 - 14	1	F184
	694-187800			27 - 39	4	
	694-187801			29	1	
	694-187801-1			29 - 14	1	
	694-187801-3			29 - 12	1	
	694-187802			29 - 11	1	
	694-187803			29 - 5	1	
	694-187804			29 - 4	1	
	694-187806			29 - 6	1	
	694-187807			29 - 19	1	
	694-187811			29 - 13	1	
	694-187813			29 - 15	1	
	694-187814			29 - 20	1	
1AHC-1560-315-4128	694-187837			72 - 39	1	F443
	694-187898			21 - 16	1	F444
	694-187899			21	1	F445
	694-187900			28	1	E226
	694-187927			27	4	
	694-187927-1			27 - 36	4	
	694-187949			28 - 5	1	F446
	694-187951			28	1	
	694-188000			21 -	1	
	694-188000-1			21	1	
	694-188006-1			22 - 1	2	
	694-188008			28	1	
	694-188465			21 - 61	2	
	694-188484-1			21 - 13	2	
	694-188484-2			21	2	
1AHC-1560-692-0963	694-188668			30	1	F186
	694-188668-2			30 - 48	1	
	694-188668-6			30 - 46	1	
	694-188696			30 - 1	1	F187
	694-189000			33 -	2	E228
	694-189001			33	2	E229
	694-189002-1			33	1	
	694-189002-2			33	1	
	694-189002-3			33	1	
	694-189002-4			33	1	
	694-189010			40 -	2	
1AHC-1560-340-9716	694-189015			33 - 86	2	
	694-189050			52 -	1	E231
	694-189055			53 -	1	K272
	694-189058			48 - 10	1	
	694-189060			51 -	1	E232
1AHC-1560-532-8300	694-189061-8			52 - 23	4	
1AHC-1560-035-1677	694-189063-6			52 - 25	4	
	694-189064			51	1	
	694-189065			52 - 26	4	F 51
1AHC-1560-692-0974	694-189066			52 - 31	4	F 52
	694-189082			52 - 36	2	F458
	694-189107-1			39 - 3	1	
	694-189107-3			39	1	
	694-189260-2			52 - 78	4	
1AHC-1560-349-5928	694-189260-4			52 - 71	4	
1AHC-1560-040-6525	694-189260-6			52 - 68	2	
1AHC-1560-040-6526	694-189260-8			52 - 69	2	

STOCK NUMBER	PART NUMBER	SOURCE CODE		FIGURE AND INDEX NO.	QTY. PER ARTICLE	MICRO-FILM INDEX
	694-189300			14 -	1	
	694-189300-1			14	1	
	694-189300-2			14	1	
	694-189300-3			14	1	
	694-189324			46 - 29	2	F459
	694-189410-1			92 - 83	1	
	694-189410-2			92	1	
	694-189410-3			93 - 8	2	
	694-189410-5			93 - 12	2	
	694-189411			93 - 13	1	
	694-189500			15	1	E234
	694-189500-1			15	1	
	694-189500-12			15 - 17	2	
	694-189500-13			15 - 18	2	
	694-189502			14 - 1	1	
	694-189502-1			14	1	
	694-189503-1			14	1	
	694-189503-2			14	1	
	694-189604			58	1	
	694-189604-1			58	1	
	694-189605			58	1	
	694-189605-1			58	1	
	694-189609			58	1	E235
	694-189609-1			58	1	
1AHC-1560-592-5255	694-189609-2			58	1	
1AHC-1560-592-5256	694-189609-3			58	1	
1AHC-1560-536-6370	694-189610			58 - 27	2	F 55
	694-189611			58 - 29	2	F189
1AHC-1560-515-4968	694-189612			58 - 26	2	F190
1AHC-1560-040-6527	694-189613			58	1	F463
1AHC-1560-040-6528	694-189614			58 - 63	1	
	694-189620-2			58 - 10	4	
1AHC-1560-697-9641	694-189620-4			58 - 3	2	
1AHC-1560-697-9642	694-189620-6			58 - 71	2	
	694-189620-8			58	4	
1AHC-1560-040-6529	694-189621-4			58 - 81	2	
1AHC-1560-040-6530	694-189621-6			58 - 13	2	
	694-189630			57 - 34	1	F464
	694-189631			57 - 38	1	F465
	694-189632			57 - 51	1	F466
	694-189634			57 -	1	F191
	694-189634-2			57 - 41	1	
	694-189634-4			57 - 42	1	
	694-189635			57	1	F192
	694-189635-2			57 - 32	1	
	694-189655			48 -	1	E236
	694-189658			49 - 6	1	F467
1AHC-1560-524-2038	694-189666			48 - 68	2	F468
	694-189677			50 - 68	1	F469
	694-189678			50 -	1	E237
	694-189678-1			50	1	
	694-189679			46	1	
	694-189697			47 -	1	
	694-189700			59 -	1	E239
	694-189700-1			59 - 25	2	
	694-189701-10			59 - 42	1	
	694-189701-14			59 - 31	1	
	694-189701-18			59 - 27	1	
	694-189701-2			59 - 30	1	
1AHC-1560-303-2289	694-189701-22			59 - 28	1	
	694-189701-26			59	1	
	694-189701-30			59	1	
	694-189701-34			59	1	
	694-189701-38			59	1	
1AHC-1560-303-2290	694-189701-44			59 - 5	1	
1AHC-1560-303-2291	694-189701-48			59 - 17	1	
1AHC-1560-303-2292	694-189701-52			59 - 6	1	
	694-189701-56			59 - 18	1	
	694-189701-6			59 - 41	1	
	694-189701-60			59	1	
1AHC-1560-612-5128	694-189701-64			59 - 20	1	
1AHC-1560-621-1623	694-189702-38			59	2	
1AHC-1560-340-9717	694-189702-42			59 - 77	1	
1AHC-1560-340-4349	694-189702-46			59 - 75	1	
1AHC-1560-340-4350	694-189702-50			59	1	
1AHC-1560-340-4351	694-189702-54			59 - 71	1	
1AHC-1560-340-4352	694-189702-58			59	1	
	694-189702-6			59 - 54	2	
1AHC-1560-340-4353	694-189702-62			59	1	
	694-189703-1			59	1	
	694-189703-5			59	1	
	694-189703-9			59	1	
	694-189710			58 -	1	E240
	694-189710-1			58	1	
	694-189711			58 - 53	8	F193
	694-189720			58	1	
	694-189720-1			58	1	
	694-189722			58 - 55	4	F470
	694-189730			59	1	E303
	694-189740-2			55 -	1	
	694-189740-3			55	1	
	694-189760			46 -	1	E242
	694-189761			46 - 20	1	F471
	694-189762			46 - 13	1	F472
	694-189763			43 - 23	2	

STOCK NUMBER	PART NUMBER	SOURCE CODE		FIGURE AND INDEX NO.	QTY. PER ARTICLE	MICROFILM INDEX
	694-189767			60 -	1	E243
	694-189767-1			60	1	
	694-189771			46 - 14	1	F473
	694-189772			46 - 21	1	F474
	694-189773			46 - 4	2	F475
1AHC-1560-332-2788	694-189774			46 - 3	1	F476
	694-189775			42 -	1	
	694-189775-1			42	1	
1AHC-1560-340-4354	694-189775-3			42 - 17	1	
	694-189776			46 - 15	1	F477
	694-189777			46 - 2	1	F478
	694-189778			46 - 22	1	F479
1AHC-1560-340-4355	694-189779			42 - 9	1	
	694-189780			43	1	
	694-189783			60 - 1	1	F480
	694-189784			43	1	
	694-189785			43	1	
	694-189786			43 - 16	1	
	694-189787			60	1	F481
	694-189788			43 - 18	1	
	694-189790			43 -	1	E244
	694-189791			42 - 16	1	F482
	694-189792			60 - 10	1	F483
	694-189793			43 - 31	3	F484
	694-189794			60 - 19	2	F485
1AHC-1560-332-0745	694-189795			42 - 18	1	F486
	694-189796			43 - 35	1	F487
	694-189797			43 - 36	1	F488
	694-189798			43 - 29	1	
	694-189799			43 - 30	1	
	694-189800			56 -	1	E245
	694-189800-1			56	1	
	694-189800-4			13 - 41	1	
	694-189800-5			13	1	
	694-189800-7			56 - 8	2	
	694-189813			60	1	F489
	694-189814			60 - 21	2	F490
	694-189816			60 - 20	1	
	694-189818			56 - 1	2	F194
1AHC-1560-028-8310	694-189819			56 - 22	2	F 60
1AHC-1560-109-9987	704-189742			55 - 66	1	F491
1AHC-1560-109-9988	704-189743			55	1	
1AHC-1560-181-0625	704-189747			55 - 56	2	F492
1AHC-1560-532-8302	704-189754			55 - 13	1	F493
1AHC-1560-130-0913	704-189755			55	1	F494
1AHC-1560-130-0930	704-189757			55 - 30	2	F495
	704-189763			46 - 33	2	F496
	7276			104 - 8	2	
	732090			51 - 51	2	
	732909			51 - 43	8	
	734-180027			27 - 58	1	F497
	734-180034			94 - 64	1	F499
	734-180063			52 - 18	1	F500
	734-180901			96 - 33	2	F197
	734-180902			96 - 35	2	F198
	734-180903			96 - 36	2	F199
	734-180904			96 - 37	2	F200
	734-182353			99	1	
	734-182353-1			99	1	
	734-182353-16			99 - 64	1	
	734-182353-17			99	1	
1AHC-1560-348-7028	734-183182			83 - 29	1	E325
	734-183193			83 - 10	1	F502
	734-183197***			83 - 26	2	F503
	734-183199***			83	1	F504
	734-183296			99 -123	2	E247
	734-183297			99 - 6	1	E248
	734-183297-1			99	1	
	734-183297-12			103 - 20	2	
	734-183297-16			103 - 19	2	
	734-183297-18			103 - 27	4	
	734-183297-2			103 - 6	2	
1AHC-1560-692-0975	734-183298-48			99 - 67	1	
1AHC-1560-692-0976	734-183298-50			99 - 68	1	
	734-183298-52			99	1	
	734-183298-53			99	1	
	734-183302			99 - 4	6	E250
1AHC-1560-612-5129	734-183302-24			102 - 6	4	
	734-183302-30			102 - 4	4	
	734-183314			99 -115	7	E251
	734-183315			99 -116	7	E252
	734-183802			81 - 7	1	F202
1AHC-1560-696-1229	734-183826			81 - 58	2	F203
	734-183826-2			94 - 24	1	
	734-183834			82	1	E255
	734-183834-2			82	4	
	734-183834-4			82 - 17	1	
	734-183834-6			82 - 18	4	
	734-183834-8			82 - 19	4	
1AHC-1560-612-3853	734-183846			80 - 15	1	F205
	734-183847			99 -114	4	F 63
	734-183855			81 - 5	3	F506
1AHC-1560-694-3736	734-183868			99 - 82	7	F206
	734-183883			44 - 5	1	F509
	734-183893			44 - 15	1	F510
	734-183894			44 - 9	1	F511
	734-184321**			24	1	F208
	734-184342			99 -130	4	F512
	734-187013			69 - 31	2	F212
	734-187016			70 - 14	1	
	734-187030			71 - 88	1	F 65
	734-187034			71	1	E258
	734-187034-2			71 - 90	1	
	734-187035			71 - 71	1	F214
	734-187036			71 - 48	1	F515
	734-187039			71 - 84	1	E328
	734-187040			71 - 82	2	F215
	734-187041			71 - 73	1	F216
	734-187065			71 - 55	1	E259
	734-187065-2			71 - 57	1	
	734-187121			71 - 78	2	F217
1AHC-1560-506-6123	734-187201			71 - 5	1	F218
	734-187201-2			71 - 6	1	
1AHC-1560-349-5929	734-187202			71 - 7	1	F219
	734-187211			71 - 44	1	F220
1AHC-1560-612-5130	734-187212			71 - 31	1	F221
1AHC-1560-612-3854	734-187213			71 - 29	1	F222
	734-187223			71 - 39	1	F516
	734-187224			71 - 24	1	F517
	734-187225			71 - 23	1	F518
	734-187226			71 - 26	1	F519
	734-187227			71 - 25	1	F520
	734-187228			71 - 27	1	F521
	734-187229			71 - 28	1	F522
	734-187230			71 - 19	1	F523
	734-187235			71 - 4	1	F524
	734-187236			71 - 66	1	F525
	734-187237			71 - 93	1	F526
	734-187238			71 - 94	1	F527
	734-187239			71 -105	1	F528
	734-187240			71 -104	1	F529
	734-187241			71 -103	1	F530
	734-187287			70 - 6	1	E329
	734-187292			70 -	1	E260
	734-187500			61 - 38	1	
	734-187510			67	1	
	734-187510-1			67	1	
	734-187521			67 - 23	2	
	734-187523			67	2	
	734-187523-2			67 - 22	2	
	734-187847			27	2	E331
	734-187848			27 - 44	4	F223
	734-187853			27 - 66	1	F224
1AHC-1560-434-7996	734-187927			27	2	F 68
	734-187927-2			27 - 35	2	
	734-187940			27	1	
	734-187940-2			27 -	1	E261
	734-187945			27 - 9	1	F 69
	734-187945-1			27 - 11	1	
	734-187947			27 - 12	1	F 70
	734-187948			27	1	E262
	734-187948-2			27	1	
	734-187949			28	1	
	734-187950-6			27	1	
	734-187951			28 - 32	1	F532
	734-187952			28 - 27	1	F533
	734-187953			28 - 40	1	F534
	734-187954			28 - 47	1	F535
1AHC-1560-339-7439	734-187972			27 - 26	2	F 71
	734-187996			27	1	E263
	734-188008			22 - 9	2	F 72
	734-188010			22 - 12	2	F536
1AHC-1560-327-1188	734-188011			22 - 13	4	F226
1AHC-1560-327-1189	734-188012			22 - 16	2	F227
	734-188022			22 - 19	4	F537
	734-188620			31 - 13	1	
	734-188622			31 - 7	1	F538
	734-188623			31 - 9	1	F539
	734-188662			32 - 45	1	K221
1AHC-1560-035-1678	734-188663			32 - 76	1	K222
1AHC-1560-024-4130	734-188663-1			32 - 77	1	
	734-189681			50 - 60	1	F540
	734-189682			50 - 63	1	F541
	734-189684			50 - 70	1	F542
	734-189685			50 - 65	1	F543
1AHC-1560-040-6532	734-189686			50 - 78	1	F229
	74			35 - 1	4	
1AHC-1560-040-6533	74-183942			87 - 62	1	F 79
	74-183943			87 - 63	5	F231
	74-189020-1L			40 - 67	1	
	74-189020-1R			40	1	
	74-189020-3			41	2	
1AHC-1560-525-9410	74-189023-1			41 - 14	2	
1AHC-1560-121-9382	74-189026-1			41 - 19	1	
1AHC-1560-121-9383	74-189026-2			41	1	
1AHC-1560-122-1017	74-189027			41 - 17	2	
1AHC-1560-180-7560	74-189032			41	2	
	74-189032-1			41 - 2	2	
	758-4			83 - 20	1	

STOCK NUMBER	PART NUMBER	SOURCE CODE		FIGURE AND INDEX NO.	QTY. PER ARTICLE	MICRO-FILM INDEX
	766-6			56 - 11	2	
	766-8			60 - 11	4	
	774-185919			33 - 83	2	K251
1AHC-1560-181-0627	774-189506			14 - 28	2	F547
	782-02			77 - 49	2	
	784-180740			94 -	1	E264
	784-180741			94 -156	1	F 77
1AHC-1560-349-5930	784-180742			94 -158	2	
	784-180743			94 -155	1	F233
	784-184729			77 - 22	1	
	784-184730			77 - 24	1	
	784-184740			77 - 32	1	
	784-184740-2			77	1	
	784-189411			92 - 78	2	F550
	784-189675			44 - 11	2	F551
	794-180062			99 -128	1	F552
	794-180691			99	1	E265
	794-180691-2			99 - 76	2	
	794-183030			104 - 15	1	E269
	794-187011			65 - 53	1	
	794-187014			69 - 33	1	E271
	794-187015			61 - 31	2	F238
	794-187016			70 - 11	1	F 5
	794-187018			69 - 6	2	F 81
1AHC-1560-692-0977	794-187021			61 - 29	3	F239
1AHC-1560-692-0978	794-187022-2			68 - 2	1	
1AHC-1560-692-0979	794-187022-4			68 - 1	1	
1AHC-1560-692-0980	794-187022-6			68 - 3	1	
	794-187025			61 - 34	3	F240
1AHC-1560-332-2791	794-187025-1			61	3	
	794-187026-1			70 - 15	1	
	794-187027-1			70 - 16	1	
	794-187029			71 - 69	1	F554
	794-187032			71 - 72	1	F241
1AHC-1560-040-6535	794-187051-18			68 - 16	1	
1AHC-1560-040-6536	794-187051-20			68 - 17	1	
1AHC-1560-090-5210	794-187051-22			68 - 7	1	
1AHC-1560-090-5211	794-187051-4			68 - 9	1	
	794-187071			65	1	F242
	794-187214			71 -129	1	F556
	794-187215			71 -126	1	F555
	794-187275			69 - 1	1	F 86
	794-187275-1			69 - 2	1	
	794-187298			70 - 12	1	F 6
	794-187293-1			70 - 13	1	
	794-187294			70 - 9	1	F 87
	794-187295			70 - 10	1	F 88
	794-187900			28	1	
	794-189656			48 - 16	3	F387
1AHC-1560-506-6124	794-189657			48 - 14	4	F388
	794-189657-2			48 - 15	3	
	794-189661*			71 -142	1	F389
	7979			48 - 35	1	
	8			6 - 2	21	
	8PNT			83 - 50	4	
	8T113			92 - 76	2	
	804-180059			52 - 16	2	F391
	804-180092			95 - 27	2	F392
	804-180459			97 -201	1	F393
	804-180866			94	1	F243
	804-181162			58 - 41	2	F 99
	804-181163			58 - 44	2	K 46
1AHC-1560-122-2576	804-182526			92 - 52	2	
	804-182626			75 - 1	2	F246
1AHC-1560-181-0333	804-183138			100 - 12	1	F247
1AHC-1560-121-2737	804-183139			100 - 14	1	
	804-183301-2			103 - 22	4	
1AHC-1560-122-8731	804-183315			103 - 4	2	E323
1AHC-1560-122-8732	804-183318			103 - 10	2	F249
1AHC-1560-122-8733	804-183320			103 - 5	2	F 8
	804-183322			103 - 13	2	F396
1AHC-1560-123-4011	804-183473			100 - 13	1	F397
1AHC-1560-121-4639	804-184732-2			77 - 41	2	
1AHC-1560-117-9997	804-184732-4			77 - 43	2	
1AHC-1560-122-3132	804-184734			77 - 42	2	F403
	804-185940			33 - 28	2	
1AHC-1560-182-4710	804-185954			16 - 2	1	E274
1AHC-1560-182-4684	804-185954-1			16	1	
	804-185958-1			16 - 3	2	
	804-185958-2			16 - 4	2	
1AHC-1560-123-3992	804-185962			16 - 5	2	F363
1AHC-1560-662-7647	804-187501			65 - 2	1	F368
1AHC-1560-662-7310	804-187502			65 - 3	1	F369
1AHC-1560-122-8156	804-187504			67 - 15	1	F103
1AHC-1560-122-9427	804-188007			24 - 23	1	F260
1AHC-1560-122-9495	804-188015			24 - 15	1	F104
1AHC-1560-122-9426	804-188017			24 - 22	1	F343
	804-188500			24	1	
	804-188500-10			24 - 49	1	
	804-188500-3			24 - 47	8	
1AHC-1560-181-0348	804-188500-4			24 - 50	2	
1AHC-1560-307-0681	804-188500-6			24 - 52	2	
	804-188500-8			24 - 48	1	
1AHC-1560-123-0254	804-188502			24 - 60	1	
1AHC-1560-118-0418	804-188519			24 - 18	1	F 12
	804-188540			21 - 70	2	F345

STOCK NUMBER	PART NUMBER	SOURCE CODE		FIGURE AND INDEX NO.	QTY. PER ARTICLE	MICRO-FILM INDEX
1AHC-1560-122-9430	804-188563			21 - 78	2	F346
1AHC-1560-123-1750	804-188573			21 - 75	2	F347
1AHC-1560-696-1234	804-188650			30	2	F 15
	804-188650-2			30	2	
1AHC-1560-123-1751	804-188651			30 - 72	2	F106
1AHC-1560-125-5423	804-189061			38 - 29	2	F263
1AHC-1560-125-5422	804-189062			38 - 31	2	F264
1AHC-1560-448-3425	804-189095			38 - 33	4	
	804-189131			33 - 44	2	F 16
1AHC-1560-029-1283	804-189139			38 - 28	2	E275
1AHC-1560-125-0128	804-189140			38	4	F109
	804-189409			93 - 10	4	
1AHC-1560-117-9696	804-189501			15 - 13	4	F265
1AHC-1560-181-0354	804-189502			14 - 3	2	F266
1AHC-1560-125-3464	804-189503			14 - 7	2	
1AHC-1560-121-5786	804-189504			14 - 11	2	F110
	804-189756			55 - 61	2	F349
	81A16758			9 - 53	8	
	814-180019			96 - 31	4	F350
	814-180029			99 - 52	1	
	814-180043			92 - 65	1	F351
	814-180507			86	12	
	814-180537			100 - 45	1	
	814-180564			87	1	
1AHC-1560-332-2793	814-180592			92	1	F 89
	814-180674			97 -185	1	F 90
	814-180677-1			97	1	
	814-180756			94 - 75	2	F 17
1AHC-1560-327-1207	814-180757			94 - 76	2	
1AHC-1560-181-1974	814-180939			17 - 12	1	F 93
1AHC-1560-181-1970	814-180939-1			18 - 15	1	
	814-183125			100 - 40	2	E276
1AHC-1560-697-0072	814-183954			87 - 22	1	F 95
	814-183954-1			87 - 23	1	
1AHC-1560-536-6371	814-183955			87 - 7	4	F270
1AHC-1560-123-0576	814-183957			87 - 30	1	
1AHC-1560-123-0577	814-183957-1			87 - 31	1	
1AHC-1560-697-0073	814-183958			87 - 37	2	
1AHC-1560-117-8454	814-183959			87 - 27	2	
	814-183960			87 - 26	2	F112
	814-183966			87	4	F356
	814-184020			2	1	F 18
	814-184020-1			2	1	
	814-184022			2 - 7	1	F113
	814-184022-1			2	1	
	814-184817			99 - 79	2	K 30
	814-185630			4	1	E278
1AHC-1560-547-2363	814-185635			4 - 8	1	F557
1AHC-1560-347-6697	814-185636			4 - 12	1	
1AHC-1560-166-3367	814-185639			4 - 6	1	F279
	814-185640			4 - 15	1	F558
	814-185642			4	1	F280
	814-187002			71 - 87	1	F559
1AHC-1560-125-2032	814-187003			71 - 86	1	F281
	814-187010			71 - 97	4	F560
	814-187011			71 -137	2	F561
	814-187012			71 -106	1	F562
	814-187013			71 - 95	1	F563
1AHC-1560-040-6574	814-187014			65 - 56	1	F564
1AHC-1560-040-6575	814-187016			69 - 15	3	F282
	814-187022			68 - 11	3	F283
1AHC-1560-320-5338	814-187023			68 - 10	3	F284
	814-187025			71	1	E279
1AHC-1560-040-6576	814-187034			71 -113	1	F565
	814-187035			71 -121	1	G 1
1AHC-1560-040-6577	814-187040			71 -116	1	G 4
	814-187041			71 -130	1	G 5
	814-187044			71 -117	1	G 6
	814-187045			71 -131	1	G 7
1AHC-1560-040-6578	814-187046			71 -162	1	G 8
	814-187049			71 -167	1	G 9
1AHC-1560-122-9173	814-187082			71 - 74	1	F285
	814-187087			71	2	G 10
	814-187206			71 -172	1	G 12
	814-187211			71 -112	1	G 13
1AHC-1560-181-1981	814-187280			70 - 1	2	F118
	814-187281			65 - 10	1	
	814-187282			65	1	F 20
	814-187282-2			65 - 7	1	
1AHC-1560-315-4129	814-187283			65 - 12	1	
1AHC-1560-434-8071	814-187284			68 - 12	1	F286
1AHC-1560-121-8841	814-187290			69 - 4	1	F119
	814-187293			70 - 3	1	F 21
	814-187301			71 - 59	1	F289
1AHC-1560-181-1982	814-187302			71 - 58	1	F290
1AHC-1560-125-5315	814-187354			61 - 1	1	F295
1AHC-1560-125-4373	814-187354-1			61	1	
	814-189663			49 - 10	1	
	814-189664**			71	1	G 18
1AHC-1560-532-8339	814-189701			46 - 39	1	G 19
	824-180521			92 - 68	2	F297
	824-180605			94 -142	2	F120
	824-180606			94 -147	4	F298
1AHC-1560-694-3742	824-180609			94 -148	4	F299
	824-180682			97	1	F121

STOCK NUMBER	PART NUMBER	SOURCE CODE		FIGURE AND INDEX NO.	QTY. PER ARTICLE	MICRO-FILM INDEX
	824-180682-2			97 - 88	1	
	824-180689			57 - 23	1	F 22
1AHC-1560-123-0767	824-181115			13 - 58	2	G 20
	824-181117			13 - 60	2	F 24
	824-183319			101 - 50	1	F300
	824-187015			65	1	F123
1AHC-1560-434-8077	824-187279			69 - 8	1	F 25
1AHC-1560-692-0989	824-187510-26			67 - 17	1	
	824-187510-27			67 - 18	1	
	824-188895			25	1	
	824-188895-2			25 - 16	1	
	824-188895-4			25 - 17	1	
1AHC-1560-532-8351	824-188896*			25 - 21	1	F304
	824-188904			25 - 18	1	F305
	8292141-G1			71	1	
	83-1R			97 - 10	1	
	834-180458			97 -200	1	G 23
	84-180723			94 - 83	2	G 25
1AHC-1560-122-9409	84-180805			97 -197	1	F127
1AHC-1560-319-2992	84-181105L			13 - 7	1	F 26
	84-181105R			13	1	F 26
	84-181106			13 - 1	1	F 27
	84-181106-1			13	1	
1AHC-1560-035-1715	84-181107L			13 - 2	1	
	84-181107R			13	1	
	84-181113			93 - 7	4	G 29
1AHC-1560-112-9535	84-181120			13 - 9	2	G 30
	84-183123			101 - 11	1	
	84-183124			101 - 12	1	
	84-183128			99 - 99	2	
	84-183130			99 -100	1	K 26
	84-183276			99 - 90	4	
	84-183277			99 - 91	4	
1AHC-1560-121-4703	84-183278			99 - 97	1	
1AHC-1560-121-2749	84-183279			99 - 92	2	
1AHC-1560-197-4067	84-183520			99 - 42	1	F 28
	84-183604			106 - 28	6	K 51
1AHC-1560-130-0690	84-183982			87	1	
	84-184118			101	1	
1AHC-1560-122-9396	84-185880			33 - 23	2	F134
1AHC-1560-122-9395	84-185881			33 - 24	2	F135
1AHC-1560-122-9394	84-185882			33 - 25	2	F136
1AHC-1560-122-9393	84-185883			33 - 26	2	F137
1AHC-1560-122-9392	84-185884			33	2	F138
1AHC-1560-122-9391	84-185885			33	2	F139
1AHC-1560-122-9390	84-185886			33	2	F140
1AHC-1560-181-1990	84-185902			35 - 21	1	G 48
1AHC-1560-029-1311	84-185905**			33	1	E285
1AHC-1560-121-7794	84-185905-500**			33	1	
1AHC-1560-181-1975	84-185970			33	2	E286
1AHC-1560-125-4609	84-187018			64 - 43	1	
	84-187018-1			64	1	
	84-187019			64 - 41	1	
	84-187023			64 - 40	1	
1AHC-1560-125-2122	84-187035			9 - 76	4	G 49
1AHC-1560-117-8020	84-187063			61 - 17	1	
	84-187064			61 - 15	1	F317
1AHC-1560-035-1721	84-187276			71 -164	1	F 54
	84-187277			71 -170	1	G 55
	84-188590			25 - 15	1	F 35
	84-188900			24 - 44	1	F 36
	84-188900-1			25 - 12	1	
1AHC-1560-302-3059	84-188900-3			25	1	
1AHC-1560-117-9690	84-189114			39 - 4	3	G 56
1AHC-1560-117-9689	84-189115			39 - 7	2	G 57
	84-189400L			13	1	E288
	84-189400R			13	1	E288
	84-189569			50	1	G 59
	84-189576			50 -102	1	G 62
	84-189577			50 -103	1	G 63
	84-189578			50 -104	1	G 64
	84-189579			50 -105	1	G 65
1AHC-1560-040-6622	84-189594			50 -107	1	G 66
1AHC-1560-040-6623	84-189595			50 -110	1	G 67
1AHC-1560-040-6624	84-189596			50 -109	1	G 68
1AHC-1560-040-6625	84-189597			50 -108	1	G 69
	84-189598			50 - 17	4	G 70
1AHC-1560-109-9369	84-189612			57 - 24	1	G 71
	84-189615			46 - 40	1	
	84-189618			46 - 46	1	G 72
	84-189619			46 - 47	1	G 73
	84-189646			48	1	E289
	84-189647			48 - 40	2	G 74
1AHC-1560-692-0990	84-189648			48 - 51	2	G 75
1AHC-1560-532-8372	84-189649			48 - 26	2	G 76
1AHC-1560-692-0991	84-189650			48 - 27	2	G 77
1AHC-1560-532-8373	84-189652			48 - 44	2	G 78
1AHC-1560-532-8374	84-189654			48 - 38	2	G 80
1AHC-1560-532-8377	84-189659			48 - 17	2	G 81
	84-189660			71	1	F 37
	84-189661			71 -140	1	G 82
	84-189664			48 - 62	2	G 84
	84-189665			48 - 67	2	G 85
1AHC-1560-040-6631	84-189668			48 - 37	2	G 86
1AHC-1560-692-0992	84-189669			48 - 23	2	G 87

STOCK NUMBER	PART NUMBER	SOURCE CODE		FIGURE AND INDEX NO.	QTY. PER ARTICLE	MICRO-FILM INDEX
	84-189677			50 - 19	5	G 88
	84-189693			48 - 64	4	G 89
1AHC-1560-692-0993	84-189719			57 - 58	6	G 90
	84-189742			55 - 19	1	G 91
1AHC-1560-332-0751	84-189743			55 - 25	1	G 92
	84-189744			55 - 5	1	F143
1AHC-1560-123-2272	84-189746			42 - 22	1	F144
1AHC-1560-123-2273	84-189746-1			42 - 23	1	
1AHC-1560-121-7841	84-189747			55 - 68	2	G 93
	84-189749			55	1	G 94
1AHC-1560-332-2794	84-189750			55	1	G 95
1AHC-1560-332-2795	84-189751			55	1	G 96
1AHC-1560-121-5626	84-189752			55	1	F145
	8660			97 - 93	2	
	8700-222400			99 - 48	5	
	870271			84	1	
	884-180096			48 - 50	2	G 98
1AHC-1560-536-6379	884-181116			13 - 59	2	F146
	894-180024			94	2	G100
	894-180086			53 - 22	1	
	894-180089			54 - 25	1	
	894-180095			54 - 15	1	
	894-180100			53 - 17	1	
	894-180141			94 - 39	1	G106
1AHC-1560-302-2061	894-180366			4 - 34	1	F147
	894-180625			94	1	
	894-180726			54 - 32	2	
	894-180730			54 - 38	1	
	894-180731			54 - 36	1	
	894-180733			54 - 40	1	
	894-180734			54 - 41	1	
	894-180738			54 - 42	1	
	894-180740			54 - 43	1	
	894-180741			54 - 2	1	
	894-180742			54	1	
	894-180743			54	1	
1AHC-1560-575-5176	894-180743-1			54 - 24	1	
	894-180744			54 - 29	1	
	894-180745			54 - 7	1	
	894-180746			54 - 53	1	
	894-180749			54 - 5	1	
	894-180751			54 - 4	1	
	894-180754			54 - 19	2	
	894-180756			54 - 20	2	
1AHC-1560-304-2464	894-180759			54 - 14	1	
	894-180760			54	1	
	894-180760-1			54 - 16	1	
	894-180760-3			54 - 17	1	
	894-180761			54 - 22	1	
	894-180765			54 - 13	2	
	894-180775			54 - 30	1	
	894-180777-1			54	1	
1AHC-1560-571-8484	894-180778			54 - 8	1	
	894-180779			54	1	
1AHC-1560-532-6367	894-180786			54 - 21	1	
1AHC-1560-694-3751	094-180787			21 - 50	2	
	894-180821			89 -	1	E291
	894-180904			96 - 28	2	
	894-183122			100	1	
	894-183122-1			100	1	
	894-183123			100 - 18	2	
	894-183138-40			100 - 6	1	
	894-183186			83 - 11	1	
	894-183187			83 - 18	1	G110
	894-183188			83 - 6	1	
	894-183189			83 - 8	1	
	894-183190			83 - 9	1	
	894-183191			83 - 19	1	
1AHC-1560-035-1729	894-183311			101 - 1	1	E295
	894-183602			94	1	F153
	894-183602-20			94 - 30	1	
	894-183605			94 - 35	1	F327
	894-183797			81 - 52	1	F328
1AHC-1560-307-0694	894-183844			53 - 9	1	
	894-183846			94 - 58	1	F 39
1AHC-1560-327-1218	894-183847			94 - 69	2	F329
	894-183848			54 - 48	5	F412
	894-183863			94	1	F 40
	894-183869			94 - 59	1	F156
	894-183873			94	1	F157
	894-183873-1			94 - 63	1	
	894-183874			54 - 26	1	
	894-183888			45 - 3	1	
	894-183892-1			45 -	1	
	894-183898			45 - 5	1	K198
	894-183899			45 - 10	1	K240
	894-183957			87 - 55	1	F158
	894-183959			87 - 61	3	
	894-183981			87 - 28	1	F 42
	894-183981-1			87 - 29	1	
	894-184054			2	1	
	894-184054-4			2 - 11	1	
	894-184410			57	1	
	894-184410-2			57 - 18	1	
	894-184410-3			57 - 19	1	

STOCK NUMBER	PART NUMBER	SOURCE CODE		FIGURE AND INDEX NO.	QTY. PER ARTICLE	MICRO-FILM INDEX
	894-184410-4			57 - 17	1	
1AHC-1560-332-2796	894-185501			3 - 45	1	J309
1AHC-1560-332-2797	894-185501-18			3	1	
	894-187005			71 - 67	1	
	894-187009			100 - 43	1	
1AHC-1560-040-6637	894-187013			63 - 40	1	
1AHC-1560-696-1240	894-187016			63 - 38	1	
1AHC-1560-040-6638	894-187032			67	1	J305
1AHC-1560-528-7959	894-187032-10			67 - 33	1	
	894-187032-4			67 - 38	1	
	894-187032-6			67 - 32	1	
	894-187033			67	1	J306
1AHC-1560-528-7693	894-187033-10			67 - 42	1	
	894-187033-4			67 - 47	1	
	894-187033-6			67 - 41	1	
	894-187050			61 - 37	1	
1AHC-1560-098-7782	894-187231			63 - 23	1	J290
	894-187297			68	1	J291
	894-187500			61	1	
	894-187510-12			67 - 27	2	
1AHC-1560-096-4762	894-187758			72 - 33	1	J303
	894-187759			72 - 34	1	J304
	894-187760			73 - 1	1	J301
1AHC-1560-332-0752	894-187760-2			74 - 14	1	
	894-187761			73	1	
1AHC-1560-332-0753	894-187761-2			74	1	
1AHC-1560-570-4560	894-187767			74 - 13	2	J293
	894-187810			72	1	E300
	894-187810-1			72 -	1	
1AHC-1560-569-2006	894-187818			27 - 15	2	
	894-187820			72 - 51	1	F159
	894-187820-1			72	1	
	894-188466			21 - 7	2	F332
	894-188478			21 - 64	4	F414
	894-188660			32 -	1	
	894-188660-2			32 - 54	1	
	894-188660-4			32 - 56	2	
	894-188660-6			32 - 55	2	
	894-189646			49 - 11	1	
	894-189670			50	1	
	894-189692			49 -	1	
	894-189783			43 - 7	1	F416
	894-189784			43 - 11	1	F417
	894-189785			43 - 14	1	F418
	894-189788			43 - 26	1	F421

STOCK NUMBER	PART NUMBER	SOURCE CODE		FIGURE AND INDEX NO.	QTY. PER ARTICLE	MICRO-FILM INDEX
	894-189789			43 - 28	1	F422
	894-189794			43 - 39	1	F426
	894-189795			43 - 33	1	F427
	9			94 - 10	2	
	9-11691			52 - 67	4	
	9-196-650			99 - 76	1	
	900-183025			4 - 20	1	
	900-184403			57 - 25	1	F374
	900-186100			10 - 1	1	E302
	900-186100-1			10	1	
	900-186175			8 - 5	1	
	900-189024			57 - 21	2	
1AHC-1560-040-6641	900-189717			50	2	F375
1AHC-1560-532-8381	900-189718			50	2	F376
1AHC-1560-125-6660	900-189719			50	1	F377
	919475**			83	1	
	92063			40 - 6	2	
	920775*			83	1	
	93			99 - 83	14	
	933585			83 - 7	3	
	94-183027			4 - 21	1	
	94-189494			33 - 69	1	
	94-189682			50 - 40	1	F334
	94-189741			55 - 44	2	F378
1AHC-1560-331-9308	94-189742			55 - 50	2	F379
1AHC-1560-121-7840	94-189781			42 - 19	1	F380
	94-189850			55 - 72	1	
	94-189850-1			55	1	
	94-189891			33	1	
	94-189891-1			33 - 77	1	
	94-189892			33	1	F335
	94-189895			33	1	F 47
1AHC-1560-331-9309	94-189897			33 - 61	1	F385
	94-189900			33	1	F 46
	94-27983A			71 - 123	1	
	942105			52 - 72	3	
	9724			4 - 45	3	
	97248			4 - 42	1	
	981557			83 - 1	1	
	992			6 - 10	1	
	99209			4 - 22	86	
	994-180082			53 - 19	1	
	99785-2			97 - 32	4	
	99899-1.070			97 - 31	4	