INFORMATION MANUAL

1980

Cessna.
SALES AND SERVICE

MODEL
152

152

For Flight Training Reference Only

NOTICE

AT THE TIME OF ISSUANCE, THIS INFORMATION MANUAL WAS AN EXACT DUPLICATE OF THE OFFICIAL PILOT'S OPERATING HANDBOOK AND FAA APPROVED AIRPLANE FLIGHT MANUAL AND IS TO BE USED FOR GENERAL PURPOSES ONLY.

IT WILL NOT BE KEPT CURRENT AND, THEREFORE, CANNOT BE USED AS A SUBSTITUTE FOR THE OFFICIAL PILOT'S OPERATING HANDBOOK AND FAA APPROVED AIRPLANE FLIGHT MANUAL INTENDED FOR OPERATION OF THE AIRPLANE.

CESSNA AIRCRAFT COMPANY
1 JULY 1979

For Flight Training Reference Only

INFORMATION MANUAL

CESSNA AIRCRAFT COMPANY

1980 MODEL 152

Member of GAMA

CESSNA AIRCRAFT COMPANY
WICHITA, KANSAS, USA

1 July 1979
D1170-13-RPC-10000-12/79

For Flight Training Reference Only

PERFORMANCE - SPECIFICATIONS

*SPEED:		
Maximum at Sea Level		110 KNOTS
Cruise, 75% Power at 8000 Ft		107 KNOTS
CRUISE: Recommended lean mixture with fuel allowance for engine start, taxi, takeoff, climb and 45 minutes reserve.		
75% Power at 8000 Ft	Range	320 NM
24.5 Gallons Usable Fuel	Time	3.1 HRS
75% Power at 8000 Ft	Range	545 NM
37.5 Gallons Usable Fuel	Time	5.2 HRS
Maximum Range at 10,000 Ft	Range	415 NM
24.5 Gallons Usable Fuel	Time	5.2 HRS
Maximum Range at 10,000 Ft	Range	690 NM
37.5 Gallons Usable Fuel	Time	8.7 HRS
RATE OF CLIMB AT SEA LEVEL		715 FPM
SERVICE CEILING		14,700 FT
TAKEOFF PERFORMANCE:		
Ground Roll		725 FT
Total Distance Over 50-Ft Obstacle		1340 FT
LANDING PERFORMANCE:		
Ground Roll		475 FT
Total Distance Over 50-Ft Obstacle		1200 FT
STALL SPEED (CAS):		
Flaps Up, Power Off		48 KNOTS
Flaps Down, Power Off		43 KNOTS
MAXIMUM WEIGHT:		
Ramp		1675 LBS
Takeoff or Landing		1670 LBS
STANDARD EMPTY WEIGHT:		
152		1109 LBS
152 II		1142 LBS
MAXIMUM USEFUL LOAD:		
152		566 LBS
152 II		533 LBS
BAGGAGE ALLOWANCE		120 LBS
WING LOADING: Pounds/Sq Ft		10.5
POWER LOADING: Pounds/HP		15.2
FUEL CAPACITY: Total		
Standard Tanks		26 GAL.
Long Range Tanks		39 GAL.
OIL CAPACITY		6 QTS
ENGINE: Avco Lycoming 110 BHP at 2550 RPM		O-235-L2C
PROPELLER: Fixed Pitch, Diameter		69 IN.

*Speed performance is shown for an airplane equipped with optional speed fairings, which increase the speeds by approximately 2 knots. There is a corresponding difference in range, while all other performance figures are unchanged when speed fairings are installed.

For Flight Training Reference Only

TABLE OF CONTENTS

SECTION

GENERAL 1

LIMITATIONS 2

EMERGENCY PROCEDURES 3

NORMAL PROCEDURES 4

PERFORMANCE 5

WEIGHT & BALANCE/
EQUIPMENT LIST 6

AIRPLANE & SYSTEMS
DESCRIPTIONS 7

AIRPLANE HANDLING,
SERVICE & MAINTENANCE 8

SUPPLEMENTS
(Optional Systems Description
& Operating Procedures) 9

For Flight Training Reference Only

SECTION 1
GENERAL

TABLE OF CONTENTS

	Page
Three View	1-2
Introduction	1-3
Descriptive Data	1-3
Engine	1-3
Propeller	1-3
Fuel	1-3
Oil	1-4
Maximum Certificated Weights	1-5
Standard Airplane Weights	1-5
Cabin And Entry Dimensions	1-5
Baggage Space Dimensions	1-5
Specific Loadings	1-5
Symbols, Abbreviations And Terminology	1-5
General Airspeed Terminology And Symbols	1-5
Meteorological Terminology	1-6
Engine Power Terminology	1-7
Airplane Performance And Flight Planning Terminology	1-7
Weight And Balance Terminology	1-7

For Flight Training Reference Only

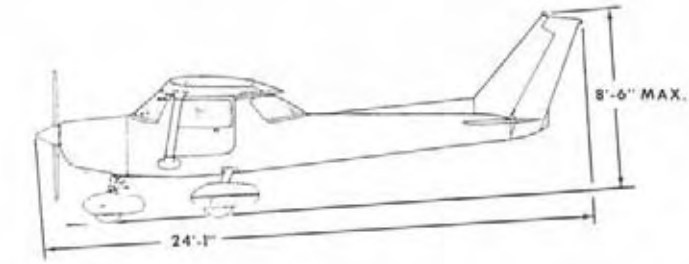

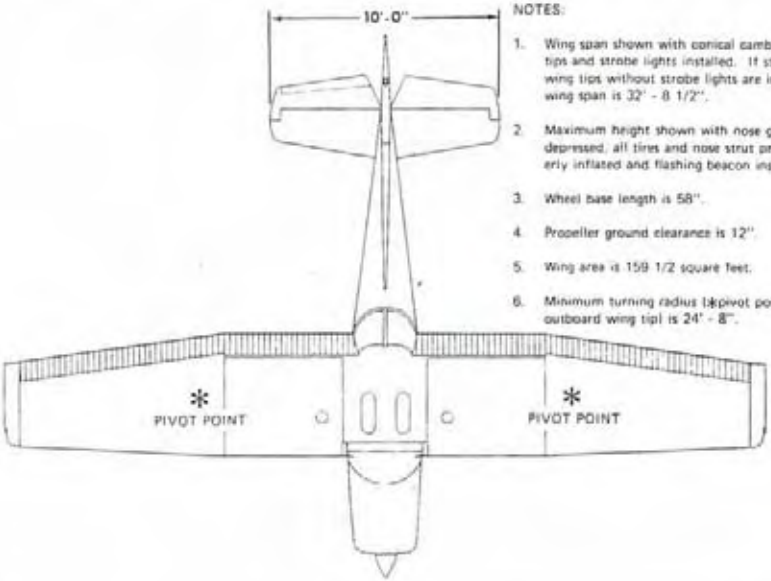

NOTES:

1. Wing span shown with conical camber wing tips and strobe lights installed. If standard wing tips without strobe lights are installed, wing span is 32' - 8 1/2".
2. Maximum height shown with nose gear depressed, all tires and nose strut properly inflated and flashing beacon installed.
3. Wheel base length is 58".
4. Propeller ground clearance is 12".
5. Wing area is 159 1/2 square feet.
6. Minimum turning radius (pivot point to outboard wing tip) is 24' - 8".

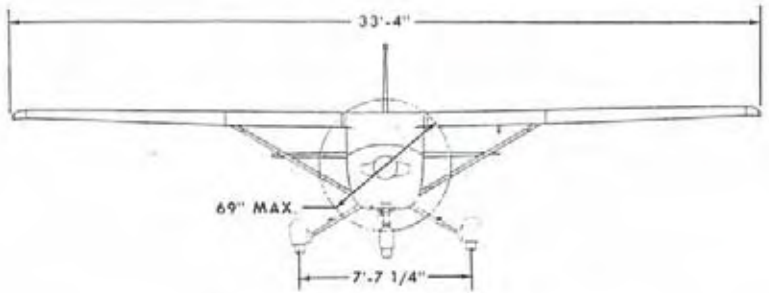

Figure 1-1. Three View

For Flight Training Reference Only

INTRODUCTION

This handbook contains 9 sections, and includes the material required to be furnished to the pilot by CAR Part 3. It also contains supplemental data supplied by Cessna Aircraft Company.

Section 1 provides basic data and information of general interest. It also contains definitions or explanations of symbols, abbreviations, and terminology commonly used.

DESCRIPTIVE DATA

ENGINE

Number of Engines: 1.
Engine Manufacturer: Avco Lycoming.
Engine Model Number: O-235-L2C.
Engine Type: Normally-aspirated, direct-drive, air-cooled, horizontally opposed, carburetor equipped, four-cylinder engine with 233.3 cu. in displacement.
Horsepower Rating and Engine Speed: 110 rated BHP at 2550 RPM.

PROPELLER

Propeller Manufacturer: McCauley Accessory Division.
Propeller Model Number: 1A103/TCM6958.
Number of Blades: 2.
Propeller Diameter, Maximum: 69 inches.
Minimum: 67.5 inches.
Propeller Type: Fixed pitch.

FUEL

Approved Fuel Grades (and Colors):
100LL Grade Aviation Fuel (Blue).
100 (Formerly 100/130) Grade Aviation Fuel (Green).

NOTE

Isopropyl alcohol or ethylene glycol monomethyl ether may be added to the fuel supply. Additive concentrations shall not exceed 1% for isopropyl alcohol or .15% for ethylene glycol monomethyl ether. Refer to Section 8 for additional information.

For Flight Training Reference Only

Fuel Capacity:
Standard Tanks:
Total Capacity: 26 gallons.
Total Capacity Each Tank: 13 gallons.
Total Usable: 24.5 gallons.

Long Range Tanks:
Total Capacity: 39 gallons.
Total Capacity Each Tank: 19.5 gallons.
Total Usable: 37.5 gallons.

NOTE

Due to cross-feeding between fuel tanks, the tanks should be re-topped after each refueling to assure maximum capacity.

OIL

Oil Grade (Specification):
MIL-L-6082 Aviation Grade Straight Mineral Oil: Use to replenish supply during first 25 hours and at the first 25-hour oil change. Continue to use until a total of 50 hours has accumulated or oil consumption has stabilized.

NOTE

The airplane was delivered from the factory with a corrosion preventive aircraft engine oil. This oil should be drained after the first 25 hours of operation.

MIL-L-22851 Ashless Dispersant Oil: This oil must be used after first 50 hours or oil consumption has stabilized.

Recommended Viscosity for Temperature Range:
MIL-L-6082 Aviation Grade Straight Mineral Oil:
SAE 50 above 16°C (60°F).
SAE 40 between -1°C (30°F) and 32°C (90°F).
SAE 30 between -18°C (0°F) and 21°C (70°F).
SAE 20 below -12°C (10°F).
MIL-L-22851 Ashless Dispersant Oil:
SAE 40 or SAE 50 above 16°C (60°F).
SAE 40 between -1°C (30°F) and 32°C (90°F).
SAE 30 or SAE 40 between -18°C (0°F) and 21°C (70°F).
SAE 30 below -12°C (10°F).

Oil Capacity:
Sump: 6 Quarts.
Total: 7 Quarts (if oil filter installed).

For Flight Training Reference Only

MAXIMUM CERTIFICATED WEIGHTS

Ramp: 1675 lbs.
Takeoff: 1670 lbs.
Landing: 1670 lbs.
Weight in Baggage Compartment:
Baggage Area 1 (or passenger on child's seat) - Station 50 to 76: 120 lbs. See note below.
Baggage Area 2 - Station 76 to 94: 40 lbs. See note below.

NOTE

The maximum combined weight capacity for baggage areas 1 and 2 is 120 lbs.

STANDARD AIRPLANE WEIGHTS

Standard Empty Weight, 152: 1109 lbs.
152 II: 1142 lbs.
Maximum Useful Load, 152: 566 lbs.
152 II: 533 lbs.

CABIN AND ENTRY DIMENSIONS

Detailed dimensions of the cabin interior and entry door openings are illustrated in Section 6.

BAGGAGE SPACE DIMENSIONS

Baggage area dimensions are illustrated in detail in Section 6.

SPECIFIC LOADINGS

Wing Loading: 10.5 lbs./sq. ft.
Power Loading: 15.2 lbs./hp.

SYMBOLS, ABBREVIATIONS AND TERMINOLOGY

GENERAL AIRSPEED TERMINOLOGY AND SYMBOLS

KCAS — **Knots Calibrated Airspeed** is indicated airspeed corrected for position and instrument error and expressed in knots. Knots calibrated airspeed is equal to KTAS in standard atmosphere at sea level.

For Flight Training Reference Only

KIAS	**Knots Indicated Airspeed** is the speed shown on the airspeed indicator and expressed in knots.
KTAS	**Knots True Airspeed** is the airspeed expressed in knots relative to undisturbed air which is KCAS corrected for altitude and temperature.
V_A	**Manuevering Speed** is the maximum speed at which you may use abrupt control travel.
V_{FE}	**Maximum Flap Extended Speed** is the highest speed permissible with wing flaps in a prescribed extended position.
V_{NO}	**Maximum Structural Cruising Speed** is the speed that should not be exceeded except in smooth air, then only with caution.
V_{NE}	**Never Exceed Speed** is the speed limit that may not be exceeded at any time.
V_S	**Stalling Speed or the minimum steady flight speed** at which the airplane is controllable.
V_{S_0}	**Stalling Speed or the minimum steady flight speed** at which the airplane is controllable in the landing configuration at the most forward center of gravity.
V_X	**Best Angle-of-Climb Speed** is the speed which results in the greatest gain of altitude in a given horizontal distance.
V_Y	**Best Rate-of-Climb Speed** is the speed which results in the greatest gain in altitude in a given time.

METEOROLOGICAL TERMINOLOGY

OAT	**Outside Air Temperature** is the free air static temperature. It is expressed in either degrees Celsius or degrees Fahrenheit.
Standard Temperature	**Standard Temperature** is 15°C at sea level pressure altitude and decreases by 2°C for each 1000 feet of altitude.
Pressure Altitude	**Pressure Altitude** is the altitude read from an altimeter when the altimeter's barometric scale has been set to 29.92 inches of mercury (1013 mb).

For Flight Training Reference Only

ENGINE POWER TERMINOLOGY

BHP	**Brake Horsepower** is the power developed by the engine.
RPM	**Revolutions Per Minute** is engine speed.
Static RPM	**Static RPM** is engine speed attained during a full-throttle engine runup when the airplane is on the ground and stationary.

AIRPLANE PERFORMANCE AND FLIGHT PLANNING TERMINOLOGY

Demonstrated Crosswind Velocity	**Demonstrated Crosswind Velocity** is the velocity of the crosswind component for which adequate control of the airplane during takeoff and landing was actually demonstrated during certification tests. The value shown is not considered to be limiting.
Usable Fuel	**Usable Fuel** is the fuel available for flight planning.
Unusable Fuel	**Unusable Fuel** is the quantity of fuel that can not be safely used in flight.
GPH	**Gallons Per Hour** is the amount of fuel (in gallons) consumed per hour.
NMPG	**Nautical Miles Per Gallon** is the distance (in nautical miles) which can be expected per gallon of fuel consumed at a specific engine power setting and/or flight configuration.
g	g is acceleration due to gravity.

WEIGHT AND BALANCE TERMINOLOGY

Reference Datum	**Reference Datum** is an imaginary vertical plane from which all horizontal distances are measured for balance purposes.
Station	**Station** is a location along the airplane fuselage given in terms of the distance from the reference datum.
Arm	**Arm** is the horizontal distance from the reference datum to the center of gravity (C.G.) of an item.
Moment	**Moment** is the product of the weight of an item multiplied

For Flight Training Reference Only

by its arm. (Moment divided by the constant 1000 is used in this handbook to simplify balance calculations by reducing the number of digits.)

Center of Gravity (C.G.)	**Center of Gravity** is the point at which an airplane, or equipment, would balance if suspended. Its distance from the reference datum is found by dividing the total moment by the total weight of the airplane.
C.G. Arm	**Center of Gravity Arm** is the arm obtained by adding the airplane's individual moments and dividing the sum by the total weight.
C.G. Limits	**Center of Gravity Limits** are the extreme center of gravity locations within which the airplane must be operated at a given weight.
Standard Empty Weight	**Standard Empty Weight** is the weight of a standard airplane, including unusable fuel, full operating fluids and full engine oil.
Basic Empty Weight	**Basic Empty Weight** is the standard empty weight plus the weight of optional equipment.
Useful Load	**Useful Load** is the difference between ramp weight and the basic empty weight.
Maximum Ramp Weight	**Maximum Ramp Weight** is the maximum weight approved for ground maneuver. (It includes the weight of start, taxi and runup fuel.)
Maximum Takeoff Weight	**Maximum Takeoff Weight** is the maximum weight approved for the start of the takeoff run.
Maximum Landing Weight	**Maximum Landing Weight** is the maximum weight approved for the landing touchdown.
Tare	**Tare** is the weight of chocks, blocks, stands, etc. used when weighing an airplane, and is included in the scale readings. Tare is deducted from the scale reading to obtain the actual (net) airplane weight.

For Flight Training Reference Only

SECTION 2
LIMITATIONS

TABLE OF CONTENTS

	Page
Introduction	2-3
Airspeed Limitations	2-3
Airspeed Indicator Markings	2-4
Power Plant Limitations	2-4
Power Plant Instrument Markings	2-5
Weight Limits	2-5
Center Of Gravity Limits	2-5
Maneuver Limits	2-6
Flight Load Factor Limits	2-6
Kinds Of Operation Limits	2-6
Fuel Limitations	2-7
Other Limitations	2-7
Flap Limitations	2-7
Placards	2-8

For Flight Training Reference Only

INTRODUCTION

Section 2 includes operating limitations, instrument markings, and basic placards necessary for the safe operation of the airplane, its engine, standard systems and standard equipment. The limitations included in this section and in Section 9 have been approved by the Federal Aviation Administration. Observance of these operating limitations is required by Federal Aviation Regulations.

NOTE

Refer to Section 9 of this Pilot's Operating Handbook for amended operating limitations, operating procedures, performance data and other necessary information for airplanes equipped with specific options.

Your Cessna is certificated under FAA Type Certificate No. 3A19 as Cessna Model No. 152.

AIRSPEED LIMITATIONS

Airspeed limitations and their operational significance are shown in figure 2-1.

	SPEED	KCAS	KIAS	REMARKS
V_{NE}	Never Exceed Speed	145	149	Do not exceed this speed in any operation.
V_{NO}	Maximum Structural Cruising Speed	108	111	Do not exceed this speed except in smooth air, and then only with caution.
V_A	Maneuvering Speed: 1670 Pounds 1500 Pounds 1350 Pounds	 101 96 91	 104 98 93	Do not make full or abrupt control movements above this speed.
V_{FE}	Maximum Flap Extended Speed	87	85	Do not exceed this speed with flaps down.
	Maximum Window Open Speed	145	149	Do not exceed this speed with windows open.

Figure 2-1. Airspeed Limitations

For Flight Training Reference Only

AIRSPEED INDICATOR MARKINGS

Airspeed indicator markings and their color code significance are shown in figure 2-2.

MARKING	KIAS VALUE OR RANGE	SIGNIFICANCE
White Arc	35 - 85	Full Flap Operating Range. Lower limit is maximum weight V_{S_0} in landing configuration. Upper limit is maximum speed permissible with flaps extended.
Green Arc	40 - 111	Normal Operating Range. Lower limit is maximum weight V_S at most forward C.G. with flaps retracted. Upper limit is maximum structural cruising speed.
Yellow Arc	111 - 149	Operations must be conducted with caution and only in smooth air.
Red Line	149	Maximum speed for all operations.

Figure 2-2. Airspeed Indicator Markings

POWER PLANT LIMITATIONS

Engine Manufacturer: Avco Lycoming.
Engine Model Number: O-235-L2C.
Engine Operating Limits for Takeoff and Continuous Operations:
Maximum Power: 110 BHP rating.
Maximum Engine Speed: 2550 RPM.

NOTE

The static RPM range at full throttle (carburetor heat off and mixture leaned to maximum RPM) is 2280 to 2380 RPM.

Maximum Oil Temperature: 245°F (118°C).
Oil Pressure, Minimum: 25 psi.
Maximum: 115 psi.
Propeller Manufacturer: McCauley Accessory Division.
Propeller Model Number: 1A103/TCM6958.
Propeller Diameter, Maximum: 69 inches.
Minimum: 67.5 inches.

For Flight Training Reference Only

POWER PLANT INSTRUMENT MARKINGS

Power plant instrument markings and their color code significance are shown in figure 2-3.

INSTRUMENT	RED LINE	GREEN ARC	RED LINE
	MINIMUM LIMIT	NORMAL OPERATING	MAXIMUM LIMIT
Tachometer:			
Sea Level	---	1900 - 2350 RPM	2550 RPM
4000 Feet		1900 - 2450 RPM	
8000 Feet		1900 - 2550 RPM	
Oil Temperature	---	100° - 245°F	245°F
Oil Pressure	25 psi	60 - 90 psi	115 psi
Fuel Quantity	E (0.75 Gal. Unusable Each Tank)	---	---
Suction	---	4.5 - 5.4 in. Hg	---

Figure 2-3. Power Plant Instrument Markings

WEIGHT LIMITS

Maximum Ramp Weight: 1675 lbs.
Maximum Takeoff Weight: 1670 lbs.
Maximum Landing Weight: 1670 lbs.
Maximum Weight in Baggage Compartment:
Baggage Area 1 (or passenger on child's seat) - Station 50 to 76: 120 lbs. See note below.
Baggage Area 2 - Station 76 to 94: 40 lbs. See note below.

NOTE

The maximum combined weight capacity for baggage areas 1 and 2 is 120 lbs.

CENTER OF GRAVITY LIMITS

Center of Gravity Range:
Forward: 31.0 inches aft of datum at 1350 lbs. or less, with straight line variation to 32.65 inches aft of datum at 1670 lbs.

For Flight Training Reference Only

Aft: 36.5 inches aft of datum at all weights.
Reference Datum: Front face of firewall.

MANEUVER LIMITS

This airplane is certificated in the utility category and is designed for limited aerobatic flight. In the acquisition of various certificates such as commercial pilot and flight instructor, certain maneuvers are required. All of these maneuvers are permitted in this airplane.

No aerobatic maneuvers are approved except those listed below:

MANEUVER	RECOMMENDED ENTRY SPEED*
Chandelles	95 knots
Lazy Eights	95 knots
Steep Turns	95 knots
Spins	Use Slow Deceleration
Stalls (Except Whip Stalls)	Use Slow Deceleration

*Higher speeds can be used if abrupt use of the controls is avoided.

The baggage compartment and/or child's seat must not be occupied during aerobatics.

Aerobatics that may impose high loads should not be attempted. The important thing to bear in mind in flight maneuvers is that the airplane is clean in aerodynamic design and will build up speed quickly with the nose down. Proper speed control is an essential requirement for execution of any maneuver, and care should always be exercised to avoid excessive speed which in turn can impose excessive loads. In the execution of all maneuvers, avoid abrupt use of controls.

FLIGHT LOAD FACTOR LIMITS

Flight Load Factors:
*Flaps Up: +4.4g, -1.76g
*Flaps Down: +3.5g

*The design load factors are 150% of the above, and in all cases, the structure meets or exceeds design loads.

KINDS OF OPERATION LIMITS

The airplane is equipped for day VFR and may be equipped for night VFR and/or IFR operations. FAR Part 91 establishes the minimum required instrumentation and equipment for these operations. The refer-

For Flight Training Reference Only

ence to types of flight operations on the operating limitations placard reflects equipment installed at the time of Airworthiness Certificate issuance.

Flight into known icing conditions is prohibited.

FUEL LIMITATIONS

2 Standard Tanks: 13 U.S. gallons each.
Total Fuel: 26 U.S. gallons.
Usable Fuel (all flight conditions): 24.5 U.S. gallons.
Unusable Fuel: 1.5 U.S. gallons.
2 Long Range Tanks: 19.5 U.S. gallons each.
Total Fuel: 39 U.S. gallons.
Usable Fuel (all flight conditions): 37.5 U.S. gallons.
Unusable Fuel: 1.5 U.S. gallons.

NOTE

Due to cross-feeding between fuel tanks, the tanks should be re-topped after each refueling to assure maximum capacity.

Takeoffs have not been demonstrated with less than 2 gallons of total fuel (1 gallon per tank).

Fuel remaining in the tank after the fuel quantity indicator reads empty (red line) cannot be safely used in flight.

Approved Fuel Grades (and Colors):
100LL Grade Aviation Fuel (Blue).
100 (Formerly 100/130) Grade Aviation Fuel (Green).

OTHER LIMITATIONS

FLAP LIMITATIONS

Approved Takeoff Range: 0° to 10°.
Approved Landing Range: 0° to 30°.

For Flight Training Reference Only

PLACARDS

The following information must be displayed in the form of composite or individual placards.

1. In full view of the pilot: (The "DAY-NIGHT-VFR-IFR" entry, shown on the example below, will vary as the airplane is equipped).

> The markings and placards installed in this airplane contain operating limitations which must be complied with when operating this airplane in the Utility Category. Other operating limitations which must be complied with when operating this airplane in this category are contained in the Pilot's Operating Handbook and FAA Approved Airplane Flight Manual.
>
> NO ACROBATIC MANEUVERS APPROVED EXCEPT THOSE LISTED BELOW

Maneuver	Rec. Entry Speed	Maneuver	Rec. Entry Speed
Chandelles	95 KIAS	Spins	Slow Decel.
Lazy 8's	95 KIAS	Stalls (Except Whip Stalls)	Slow Decel.
Steep Turns	95 KIAS		

> Intentional spins prohibited with flaps extended.
> Flight into known icing conditions prohibited.
>
> This airplane is certified for the following flight operations as of date of original airworthiness certificate:
>
> DAY—NIGHT—VFR—IFR

2. In the baggage compartment:

> 120 LBS. MAXIMUM BAGGAGE AND/OR AUXILIARY SEAT PASSENGER. FOR ADDITIONAL LOADING INSTRUCTIONS SEE WEIGHT AND BALANCE DATA.

For Flight Training Reference Only

3. Near fuel shutoff valve (standard tanks):

FUEL - 24.5 GALS - ON-OFF

Near fuel shutoff valve (long range tanks):

FUEL - 37.5 GALS - ON-OFF

4. Near fuel tank filler cap (standard tanks):

FUEL 100LL/100 MIN. GRADE AVIATION GASOLINE CAP. 13 U.S. GAL.

Near fuel tank filler cap (long range tanks):

FUEL 100LL/100 MIN. GRADE AVIATION GASOLINE CAP. 19.5 U.S. GAL. CAP 13.0 U.S. GAL. TO BOTTOM OF FILLER COLLAR

5. On the instrument panel near the altimeter:

SPIN RECOVERY 1. VERIFY AILERONS NEUTRAL AND THROTTLE CLOSED 2. APPLY FULL OPPOSITE RUDDER 3. MOVE CONTROL WHEEL BRISKLY FORWARD TO BREAK STALL 4. NEUTRALIZE RUDDER AND RECOVER FROM DIVE

For Flight Training Reference Only

6. A calibration card is provided to indicate the accuracy of the magnetic compass in 30° increments.

7. On oil filler cap:

OIL 6 QTS

8. On control lock:

CONTROL LOCK - REMOVE BEFORE STARTING ENGINE

9. Near airspeed indicator:

MANEUVER SPEED - 104 KIAS

For Flight Training Reference Only

SECTION 3
EMERGENCY PROCEDURES

TABLE OF CONTENTS

Page

Introduction 3-3
Airspeeds For Emergency Operation 3-3

OPERATIONAL CHECKLISTS

Engine Failures 3-3
Engine Failure During Takeoff Run 3-3
Engine Failure Immediately After Takeoff 3-3
Engine Failure During Flight 3-4
Forced Landings 3-4
Emergency Landing Without Engine Power 3-4
Precautionary Landing With Engine Power 3-4
Ditching 3-4
Fires 3-5
During Start On Ground 3-5
Engine Fire In Flight 3-5
Electrical Fire In Flight 3-6
Cabin Fire 3-6
Wing Fire 3-7
Icing 3-7
Inadvertent Icing Encounter 3-7
Landing With A Flat Main Tire 3-8
Electrical Power Supply System Malfunctions 3-8
Ammeter Shows Excessive Rate Of Charge
(Full Scale Deflection) 3-8
Low-Voltage Light Illuminates During Flight
(Ammeter Indicates Discharge) 3-8

AMPLIFIED PROCEDURES

Engine Failure 3-9
Forced Landings 3-10
Landing Without Elevator Control 3-10
Fires 3-10

For Flight Training Reference Only

TABLE OF CONTENTS (Continued)

Page

mergency Operation In Clouds (Vacuum System Failure) . . . 3-11
Executing A 180° Turn In Clouds 3-11
Emergency Descent Through Clouds 3-11
Recovery From A Spiral Dive 3-12
Inadvertent Flight Into Icing Conditions 3-12
Spins 3-12
Rough Engine Operation Or Loss Of Power 3-13
Carburetor Icing 3-13
Spark Plug Fouling 3-13
Magneto Malfunction 3-14
Low Oil Pressure 3-14
Electrical Power Supply System Malfunctions 3-14
Excessive Rate Of Charge 3-14
Insufficient Rate Of Charge 3-15

For Flight Training Reference Only

INTRODUCTION

Section 3 provides checklist and amplified procedures for coping with emergencies that may occur. Emergencies caused by airplane or engine malfunctions are extremely rare if proper preflight inspections and maintenance are practiced. Enroute weather emergencies can be minimized or eliminated by careful flight planning and good judgment when unexpected weather is encountered. However, should an emergency arise, the basic guidelines described in this section should be considered and applied as necessary to correct the problem. Emergency procedures associated with ELT and other optional systems can be found in Section 9.

AIRSPEEDS FOR EMERGENCY OPERATION

Engine Failure After Takeoff	60 KIAS
Maneuvering Speed:	
1670 Lbs	104 KIAS
1500 Lbs	98 KIAS
1350 Lbs	93 KIAS
Maximum Glide	60 KIAS
Precautionary Landing With Engine Power	55 KIAS
Landing Without Engine Power:	
Wing Flaps Up	65 KIAS
Wing Flaps Down	60 KIAS

OPERATIONAL CHECKLISTS

ENGINE FAILURES

ENGINE FAILURE DURING TAKEOFF RUN

1. Throttle -- IDLE.
2. Brakes -- APPLY.
3. Wing Flaps -- RETRACT.
4. Mixture -- IDLE CUT-OFF.
5. Ignition Switch -- OFF.
6. Master Switch -- OFF.

ENGINE FAILURE IMMEDIATELY AFTER TAKEOFF

1. Airspeed -- 60 KIAS.
2. Mixture -- IDLE CUT-OFF.

For Flight Training Reference Only

3. Fuel Shutoff Valve -- OFF.
4. Ignition Switch -- OFF.
5. Wing Flaps -- AS REQUIRED.
6. Master Switch -- OFF.

ENGINE FAILURE DURING FLIGHT

1. Airspeed -- 60 KIAS.
2. Carburetor Heat -- ON.
3. Primer -- IN and LOCKED.
4. Fuel Shutoff Valve -- ON.
5. Mixture -- RICH.
6. Ignition Switch -- BOTH (or START if propeller is stopped).

FORCED LANDINGS

EMERGENCY LANDING WITHOUT ENGINE POWER

1. Airspeed -- 65 KIAS (flaps UP).
   60 KIAS (flaps DOWN).
2. Mixture -- IDLE CUT-OFF.
3. Fuel Shutoff Valve -- OFF.
4. Ignition Switch -- OFF.
5. Wing Flaps -- AS REQUIRED (30° recommended).
6. Master Switch -- OFF.
7. Doors -- UNLATCH PRIOR TO TOUCHDOWN.
8. Touchdown -- SLIGHTLY TAIL LOW.
9. Brakes -- APPLY HEAVILY.

PRECAUTIONARY LANDING WITH ENGINE POWER

1. Airspeed -- 60 KIAS.
2. Wing Flaps -- 20°.
3. Selected Field -- FLY OVER, noting terrain and obstructions, then retract flaps upon reaching a safe altitude and airspeed.
4. Radio and Electrical Switches -- OFF.
5. Wing Flaps -- 30° (on final approach).
6. Airspeed -- 55 KIAS.
7. Master Switch -- OFF.
8. Doors -- UNLATCH PRIOR TO TOUCHDOWN.
9. Touchdown -- SLIGHTLY TAIL LOW.
10. Ignition Switch -- OFF.
11. Brakes -- APPLY HEAVILY.

For Flight Training Reference Only

DITCHING

1. Radio -- TRANSMIT MAYDAY on 121.5 MHz, giving location and intentions and SQUAWK 7700 if transponder is installed.
2. Heavy Objects (in baggage area) -- SECURE OR JETTISON.
3. Approach -- High Winds, Heavy Seas -- INTO THE WIND.
   Light Winds, Heavy Swells -- PARALLEL TO SWELLS.
4. Wing Flaps -- 30°.
5. Power -- ESTABLISH 300 FT/MIN DESCENT AT 55 KIAS.
6. Cabin Doors -- UNLATCH.
7. Touchdown -- LEVEL ATTITUDE AT 300 FT/MIN DESCENT.
8. Face -- CUSHION at touchdown with folded coat.
9. Airplane -- EVACUATE through cabin doors. If necessary, open windows and flood cabin to equalize pressure so doors can be opened.
10. Life Vests and Raft -- INFLATE.

FIRES

DURING START ON GROUND

1. Cranking -- CONTINUE, to get a start which would suck the flames and accumulated fuel through the carburetor and into the engine.

If engine starts:

2. Power -- 1700 RPM for a few minutes.
3. Engine -- SHUTDOWN and inspect for damage.

If engine fails to start:

4. Cranking -- CONTINUE in an effort to obtain a start.
5. Fire Extinguisher -- OBTAIN (have ground attendants obtain if not installed).
6. Engine -- SECURE.
   a. Master Switch -- OFF.
   b. Ignition Switch -- OFF.
   c. Fuel Shutoff Valve -- OFF.
7. Fire -- EXTINGUISH using fire extinguisher, wool blanket, or dirt.
8. Fire Damage -- INSPECT, repair damage or replace damaged components or wiring before conducting another flight.

ENGINE FIRE IN FLIGHT

1. Mixture -- IDLE CUT-OFF.

For Flight Training Reference Only

2. Fuel Shutoff Valve -- OFF.
3. Master Switch -- OFF.
4. Cabin Heat and Air -- OFF (except wing root vents).
5. Airspeed -- 85 KIAS (If fire is not extinguished, increase glide speed to find an airspeed which will provide an incombustible mixture).
6. Forced Landing -- EXECUTE (as described in Emergency Landing Without Engine Power).

ELECTRICAL FIRE IN FLIGHT

1. Master Switch -- OFF.
2. All Other Switches (except ignition switch) -- OFF.
3. Vents/Cabin Air/Heat -- CLOSED.
4. Fire Extinguisher -- ACTIVATE (if available).

WARNING

After discharging an extinguisher within a closed cabin, ventilate the cabin.

If fire appears out and electrical power is necessary for continuance of flight:

5. Master Switch -- ON.
6. Circuit Breakers -- CHECK for faulty circuit, do not reset.
7. Radio/Electrical Switches -- ON one at a time, with delay after each until short circuit is localized.
8. Vents/Cabin Air/Heat -- OPEN when it is ascertained that fire is completely extinguished.

CABIN FIRE

1. Master Switch -- OFF.
2. Vents/Cabin Air/Heat -- CLOSED (to avoid drafts).
3. Fire Extinguisher -- ACTIVATE (if available).

WARNING

After discharging an extinguisher within a closed cabin, ventilate the cabin.

4. Land the airplane as soon as possible to inspect for damage.

For Flight Training Reference Only

WING FIRE

1. Navigation Light Switch -- OFF.
2. Strobe Light Switch (if installed) -- OFF.
3. Pitot Heat Switch (if installed) -- OFF.

NOTE

Perform a side slip to keep the flames away from the fuel tank and cabin, and land as soon as possible, with flaps retracted.

ICING

INADVERTENT ICING ENCOUNTER

1. Turn pitot heat switch ON (if installed).
2. Turn back or change altitude to obtain an outside air temperature that is less conducive to icing.
3. Pull cabin heat control full out to obtain maximum defroster air temperature. For greater air flow at reduced temperatures, adjust the cabin air control as required.
4. Open the throttle to increase engine speed and minimize ice build-up on propeller blades.
5. Watch for signs of carburetor air filter ice and apply carburetor heat as required. An unexpected loss in engine speed could be caused by carburetor ice or air intake filter ice. Lean the mixture for maximum RPM, if carburetor heat is used continuously.
6. Plan a landing at the nearest airport. With an extremely rapid ice build-up, select a suitable "off airport" landing site.
7. With an ice accumulation of 1/4 inch or more on the wing leading edges, be prepared for significantly higher stall speed.
8. Leave wing flaps retracted. With a severe ice build-up on the horizontal tail, the change in wing wake airflow direction caused by wing flap extension could result in a loss of elevator effectiveness.
9. Open left window and, if practical, scrape ice from a portion of the windshield for visibility in the landing approach.
10. Perform a landing approach using a forward slip, if necessary, for improved visibility.
11. Approach at 65 to 75 KIAS depending upon the amount of ice accumulation.
12. Perform a landing in level attitude.

For Flight Training Reference Only

LANDING WITH A FLAT MAIN TIRE

1. Wing Flaps -- AS DESIRED.
2. Approach -- NORMAL.
3. Touchdown -- GOOD TIRE FIRST, hold airplane off flat tire as long as possible with aileron control.

ELECTRICAL POWER SUPPLY SYSTEM MALFUNCTIONS

AMMETER SHOWS EXCESSIVE RATE OF CHARGE (Full Scale Deflection)

1. Alternator -- OFF.
2. Alternator Circuit Breaker -- PULL.
3. Nonessential Electrical Equipment -- OFF.
4. Flight -- TERMINATE as soon as practical.

LOW-VOLTAGE LIGHT ILLUMINATES DURING FLIGHT (Ammeter Indicates Discharge)

NOTE

Illumination of the low-voltage light may occur during low RPM conditions with an electrical load on the system such as during a low RPM taxi. Under these conditions, the light will go out at higher RPM. The master switch need not be recycled since an over-voltage condition has not occurred to de-activate the alternator system.

1. Radios -- OFF.
2. Alternator Circuit Breaker -- CHECK IN.
3. Master Switch -- OFF (both sides).
4. Master Switch -- ON.
5. Low-Voltage Light -- CHECK OFF.
6. Radios -- ON.

If low-voltage light illuminates again:

7. Alternator -- OFF.
8. Nonessential Radio and Electrical Equipment -- OFF.
9. Flight -- TERMINATE as soon as practical.

For Flight Training Reference Only

AMPLIFIED PROCEDURES

ENGINE FAILURE

If an engine failure occurs during the takeoff run, the most important thing to do is stop the airplane on the remaining runway. Those extra items on the checklist will provide added safety after a failure of this type.

Prompt lowering of the nose to maintain airspeed and establish a glide attitude is the first response to an engine failure after takeoff. In most cases, the landing should be planned straight ahead with only small changes in direction to avoid obstructions. Altitude and airspeed are seldom sufficient to execute a 180° gliding turn necessary to return to the runway. The checklist procedures assume that adequate time exists to secure the fuel and ignition systems prior to touchdown.

After an engine failure in flight, the best glide speed as shown in figure 3-1 should be established as quickly as possible. While gliding toward a suitable landing area, an effort should be made to identify the cause of the failure. If time permits, an engine restart should be attempted as shown in the checklist. If the engine cannot be restarted, a forced landing without power must be completed.

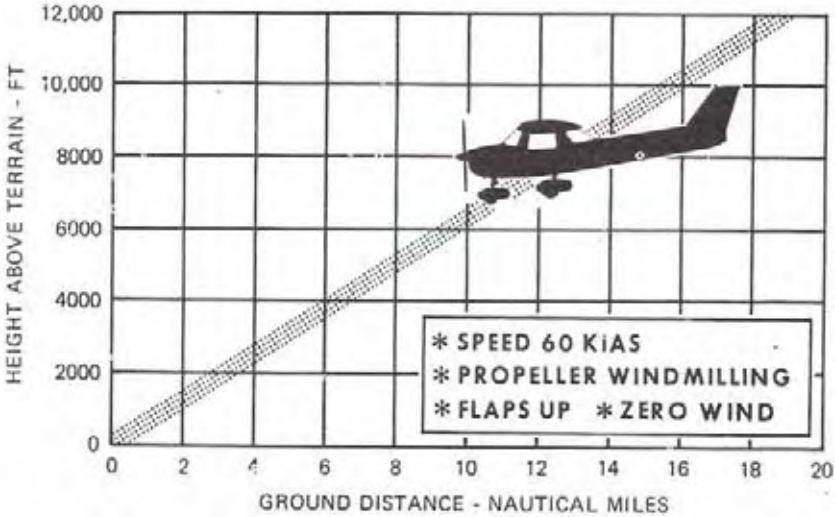

Figure 3-1. Maximum Glide

For Flight Training Reference Only

FORCED LANDINGS

If all attempts to restart the engine fail and a forced landing is imminent, select a suitable field and prepare for the landing as discussed under the Emergency Landing Without Engine Power checklist.

Before attempting an "off airport" landing with engine power available, one should fly over the landing area at a safe but low altitude to inspect the terrain for obstructions and surface conditions, proceeding as discussed under the Precautionary Landing With Engine Power checklist.

Prepare for ditching by securing or jettisoning heavy objects located in the baggage area and collect folded coats for protection of occupants' face at touchdown. Transmit Mayday message on 121.5 MHz giving location and intentions, and squawk 7700 if a transponder is installed. Avoid a landing flare because of difficulty in judging height over a water surface.

LANDING WITHOUT ELEVATOR CONTROL

Trim for horizontal flight (with an airspeed of approximately 55 KIAS and flaps lowered to 20°) by using throttle and elevator trim controls. Then **do not change the elevator trim control setting**; control the glide angle by adjusting power exclusively.

At flareout, the nose-down moment resulting from power reduction is an adverse factor and the airplane may hit on the nose wheel. Consequently, at flareout, the trim control should be set at the full nose-up position and the power adjusted so that the airplane will rotate to the horizontal attitude for touchdown. Close the throttle at touchdown.

FIRES

Although engine fires are extremely rare in flight, the steps of the appropriate checklist should be followed if one is encountered. After completion of this procedure, execute a forced landing. Do not attempt to restart the engine.

The initial indication of an electrical fire is usually the odor of burning insulation. The checklist for this problem should result in elimination of the fire.

For Flight Training Reference Only

EMERGENCY OPERATION IN CLOUDS

(Vacuum System Failure)

In the event of a vacuum system failure during flight, the directional indicator and attitude indicator will be disabled, and the pilot will have to rely on the turn coordinator if he inadvertently flies into clouds. The following instructions assume that only the electrically-powered turn coordinator is operative, and that the pilot is not completely proficient in instrument flying.

EXECUTING A 180° TURN IN CLOUDS

Upon inadvertently entering the clouds, an immediate plan should be made to turn back as follows:

1. Note the compass heading.
2. Note the time of the minute hand and observe the position of the sweep second hand on the clock.
3. When the sweep second hand indicates the nearest half-minute, initiate a standard rate left turn, holding the turn coordinator symbolic airplane wing opposite the lower left index mark for 60 seconds. Then roll back to level flight by leveling the miniature airplane.
4. Check accuracy of the turn by observing the compass heading which should be the reciprocal of the original heading.
5. If necessary, adjust heading primarily with skidding motions rather than rolling motions so that the compass will read more accurately.
6. Maintain altitude and airspeed by cautious application of elevator control. Avoid overcontrolling by keeping the hands off the control wheel as much as possible and steering only with rudder.

EMERGENCY DESCENT THROUGH CLOUDS

If conditions preclude reestablishment of VFR flight by a 180° turn, a descent through a cloud deck to VFR conditions may be appropriate. If possible, obtain radio clearance for an emergency descent through clouds. To guard against a spiral dive, choose an easterly or westerly heading to minimize compass card swings due to changing bank angles. In addition, keep hands off the control wheel and steer a straight course with rudder control by monitoring the turn coordinator. Occasionally check the compass heading and make minor corrections to hold an approximate course. Before descending into the clouds, set up a stabilized let-down condition as follows:

1. Apply full rich mixture.

For Flight Training Reference Only

2. Use full carburetor heat.
3. Reduce power to set up a 500 to 800 ft/min rate of descent.
4. Adjust the elevator trim for a stabilized descent at 70 KIAS.
5. Keep hands off control wheel.
6. Monitor turn coordinator and make corrections by rudder alone.
7. Check trend of compass card movement and make cautious corrections with rudder to stop turn.
8. Upon breaking out of clouds, resume normal cruising flight.

RECOVERY FROM A SPIRAL DIVE

If a spiral is encountered, proceed as follows:

1. Close the throttle.
2. Stop the turn by using coordinated aileron and rudder control to align the symbolic airplane in the turn coordinator with the horizon reference line.
3. Cautiously apply elevator back pressure to slowly reduce the airspeed to 70 KIAS.
4. Adjust the elevator trim control to maintain a 70 KIAS glide.
5. Keep hands off the control wheel, using rudder control to hold a straight heading.
6. Apply carburetor heat.
7. Clear engine occasionally, but avoid using enough power to disturb the trimmed glide.
8. Upon breaking out of clouds, resume normal cruising flight.

INADVERTENT FLIGHT INTO ICING CONDITIONS

Flight into icing conditions is prohibited. An inadvertent encounter with these conditions can best be handled using the checklist procedures. The best procedure, of course, is to turn back or change altitude to escape icing conditions.

SPINS

Should an inadvertent spin occur, the following recovery procedure should be used:

1. PLACE AILERONS IN NEUTRAL POSITION.
2. RETARD THROTTLE TO IDLE POSITION.
3. APPLY AND **HOLD** FULL RUDDER OPPOSITE TO THE DIRECTION OF ROTATION.

For Flight Training Reference Only

4. JUST **AFTER** THE RUDDER REACHES THE STOP, MOVE THE CONTROL WHEEL **BRISKLY** FORWARD FAR ENOUGH TO BREAK THE STALL. Full down elevator may be required at aft center of gravity loadings to assure optimum recoveries.
5. **HOLD** THESE CONTROL INPUTS UNTIL ROTATION STOPS. Premature relaxation of the control inputs may extend the recovery.
6. AS ROTATION STOPS, NEUTRALIZE RUDDER, AND MAKE A SMOOTH RECOVERY FROM THE RESULTING DIVE.

NOTE

If disorientation precludes a visual determination of the direction of rotation, the symbolic airplane in the turn coordinator may be referred to for this information.

For additional information on spins and spin recovery, see the discussion under SPINS in Normal Procedures (Section 4).

ROUGH ENGINE OPERATION OR LOSS OF POWER

CARBURETOR ICING

A gradual loss of RPM and eventual engine roughness may result from the formation of carburetor ice. To clear the ice, apply full throttle and pull the carburetor heat knob full out until the engine runs smoothly; then remove carburetor heat and readjust the throttle. If conditions require the continued use of carburetor heat in cruise flight, use the minimum amount of heat necessary to prevent ice from forming and lean the mixture slightly for smoothest engine operation.

SPARK PLUG FOULING

A slight engine roughness in flight may be caused by one or more spark plugs becoming fouled by carbon or lead deposits. This may be verified by turning the ignition switch momentarily from BOTH to either L or R position. An obvious power loss in single ignition operation is evidence of spark plug or magneto trouble. Assuming that spark plugs are the more likely cause, lean the mixture to the recommended lean setting for cruising flight. If the problem does not clear up in several minutes, determine if a richer mixture setting will produce smoother operation. If not, proceed to the nearest airport for repairs using the BOTH position of

For Flight Training Reference Only

the ignition switch unless extreme roughness dictates the use of a single ignition position.

MAGNETO MALFUNCTION

A sudden engine roughness or misfiring is usually evidence of magneto problems. Switching from BOTH to either L or R ignition switch position will identify which magneto is malfunctioning. Select different power settings and enrichen the mixture to determine if continued operation on BOTH magnetos is practicable. If not, switch to the good magneto and proceed to the nearest airport for repairs.

LOW OIL PRESSURE

If low oil pressure is accompanied by normal oil temperature, there is a possibility the oil pressure gage or relief valve is malfunctioning. A leak in the line to the gage is not necessarily cause for an immediate precautionary landing because an orifice in this line will prevent a sudden loss of oil from the engine sump. However, a landing at the nearest airport would be advisable to inspect the source of trouble.

If a total loss of oil pressure is accompanied by a rise in oil temperature, there is good reason to suspect an engine failure is imminent. Reduce engine power immediately and select a suitable forced landing field. Use only the minimum power required to reach the desired touchdown spot.

ELECTRICAL POWER SUPPLY SYSTEM MALFUNCTIONS

Malfunctions in the electrical power supply system can be detected by periodic monitoring of the ammeter and low-voltage warning light; however, the cause of these malfunctions is usually difficult to determine. A broken alternator drive belt or wiring is most likely the cause of alternator failures, although other factors could cause the problem. A damaged or improperly adjusted alternator control unit can also cause malfunctions. Problems of this nature constitute an electrical emergency and should be dealt with immediately. Electrical power malfunctions usually fall into two categories: excessive rate of charge and insufficient rate of charge. The paragraphs below describe the recommended remedy for each situation.

EXCESSIVE RATE OF CHARGE

After engine starting and heavy electrical usage at low engine speeds

For Flight Training Reference Only

(such as extended taxiing) the battery condition will be low enough to accept above normal charging during the initial part of a flight. However, after thirty minutes of cruising flight, the ammeter should be indicating less than two needle widths of charging current. If the charging rate were to remain above this value on a long flight, the battery would overheat and evaporate the electrolyte at an excessive rate.

Electronic components in the electrical system can be adversely affected by higher than normal voltage. The alternator control unit includes an over-voltage sensor which normally will automatically shut down the alternator if the charge voltage reaches approximately 31.5 volts. If the over-voltage sensor malfunctions or is improperly adjusted, as evidenced by an excessive rate of charge shown on the ammeter, the alternator should be turned off, alternator circuit breaker pulled, nonessential electrical equipment turned off and the flight terminated as soon as practical.

INSUFFICIENT RATE OF CHARGE

NOTE

> Illumination of the low-voltage light and ammeter discharge indications may occur during low RPM conditions with an electrical load on the system, such as during a low RPM taxi. Under these conditions, the light will go out at higher RPM. The master switch need not be recycled since an over-voltage condition has not occurred to de-activate the alternator system.

If the over-voltage sensor should shut down the alternator, or if the alternator circuit breaker should trip, a discharge rate will be shown on the ammeter followed by illumination of the low-voltage warning light. Since this may be a "nuisance" trip-out, an attempt should be made to reactivate the alternator system. To do this, turn the radios off, check that the alternator circuit breaker is in, then turn both sides of the master switch off and then on again. If the problem no longer exists, normal alternator charging will resume and the low-voltage light will go off. The radios may then be turned back on. If the light illuminates again, a malfunction is confirmed. In this event, the flight should be terminated and/or the current drain on the battery minimized because the battery can supply the electrical system for only a limited period of time. If the emergency occurs at night, power must be conserved for later use of the landing light and flaps during landing.

For Flight Training Reference Only

SECTION 4
NORMAL PROCEDURES

TABLE OF CONTENTS

Page

Introduction 4-3
Speeds For Normal Operation 4-3

CHECKLIST PROCEDURES

Preflight Inspection 4-5
Cabin 4-5
Empennage 4-5
Right Wing, Trailing Edge 4-5
Right Wing 4-5
Nose 4-6
Left Wing 4-6
Left Wing, Leading Edge 4-6
Left Wing, Trailing Edge 4-6
Before Starting Engine 4-6
Starting Engine (Temperatures Above Freezing) 4-7
Before Takeoff 4-7
Takeoff 4-8
Normal Takeoff 4-8
Short Field Takeoff 4-8
Enroute Climb 4-8
Cruise 4-8
Descent 4-9
Before Landing 4-9
Landing 4-9
Normal Landing 4-9
Short Field Landing 4-9
Balked Landing 4-9
After Landing 4-10
Securing Airplane 4-10

AMPLIFIED PROCEDURES

Starting Engine (Temperatures Above Freezing) 4-11
Taxiing 4-11

For Flight Training Reference Only

TABLE OF CONTENTS (Continued)

	Page
Before Takeoff	4-13
Warm-Up	4-13
Magneto Check	4-13
Alternator Check	4-13
Takeoff	4-14
Power Check	4-14
Wing Flap Settings	4-14
Crosswind Takeoff	4-15
Enroute Climb	4-15
Cruise	4-15
Leaning With A Cessna Economy Mixture Indicator (EGT)	4-16
Fuel Savings Procedures For Flight Training Operations	4-17
Stalls	4-18
Spins	4-18
Landing	4-20
Short Field Landing	4-20
Crosswind Landing	4-20
Balked Landing	4-21
Cold Weather Operation	4-21
Noise Abatement	4-22

For Flight Training Reference Only

INTRODUCTION

Section 4 provides checklist and amplified procedures for the conduct of normal operation. Normal procedures associated with optional systems can be found in Section 9.

SPEEDS FOR NORMAL OPERATION

Unless otherwise noted, the following speeds are based on a maximum weight of 1670 pounds and may be used for any lesser weight.

Takeoff:	
Normal Climb Out	65-75 KIAS
Short Field Takeoff, Flaps 10°, Speed at 50 Feet	54 KIAS
Climb, Flaps Up:	
Normal	70-80 KIAS
Best Rate of Climb, Sea Level	67 KIAS
Best Rate of Climb, 10,000 Feet	61 KIAS
Best Angle of Climb, Sea Level thru 10,000 Feet	55 KIAS
Landing Approach:	
Normal Approach, Flaps Up	60-70 KIAS
Normal Approach, Flaps 30°	55-65 KIAS
Short Field Approach, Flaps 30°	54 KIAS
Balked Landing:	
Maximum Power, Flaps 20°	55 KIAS
Maximum Recommended Turbulent Air Penetration Speed:	
1670 Lbs	104 KIAS
1500 Lbs	98 KIAS
1350 Lbs	93 KIAS
Maximum Demonstrated Crosswind Velocity	12 KNOTS

For Flight Training Reference Only

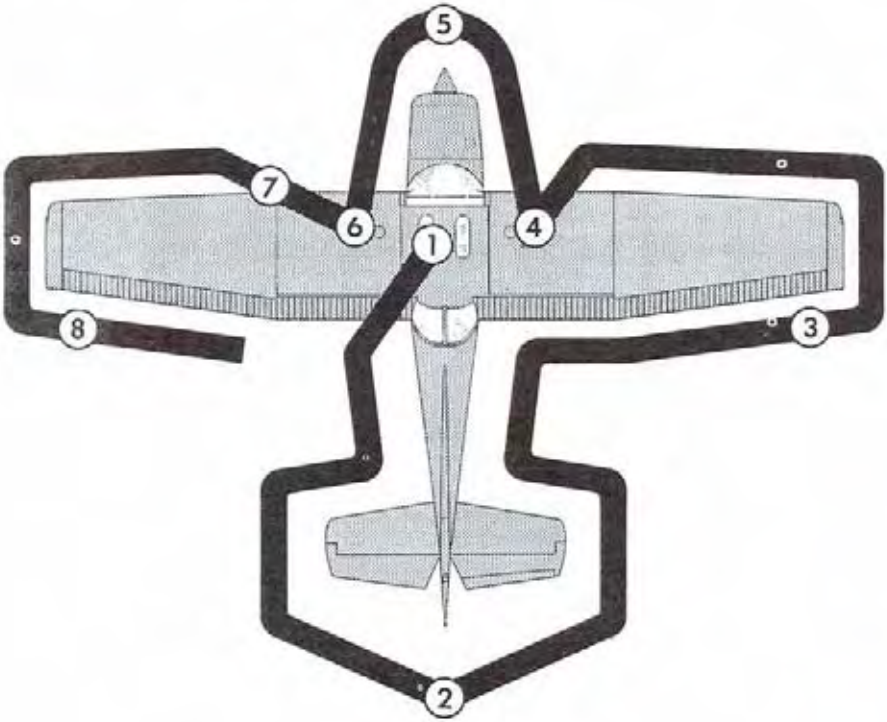

NOTE

Visually check airplane for general condition during walk-around inspection. In cold weather, remove even small accumulations of frost, ice or snow from wing, tail and control surfaces. Also, make sure that control surfaces contain no internal accumulations of ice or debris. Prior to flight, check that pitot heater (if installed) is warm to touch within 30 seconds with battery and pitot heat switches on. If a night flight is planned, check operation of all lights, and make sure a flashlight is available.

Figure 4-1. Preflight Inspection

For Flight Training Reference Only

CHECKLIST PROCEDURES

PREFLIGHT INSPECTION

(1) CABIN

1. Pilot's Operating Handbook -- AVAILABLE IN THE AIRPLANE.
2. Control Wheel Lock -- REMOVE.
3. Ignition Switch -- OFF.
4. Master Switch -- ON.

WARNING

When turning on the master switch, using an external power source, or pulling the propeller through by hand, treat the propeller as if the ignition switch were on. Do not stand, nor allow anyone else to stand, within the arc of the propeller, since a loose or broken wire, or a component malfunction, could cause the propeller to rotate.

5. Fuel Quantity Indicators -- CHECK QUANTITY.
6. Master Switch -- OFF.
7. Fuel Shutoff Valve -- ON.

(2) EMPENNAGE

1. Rudder Gust Lock -- REMOVE.
2. Tail Tie-Down -- DISCONNECT.
3. Control Surfaces -- CHECK freedom of movement and security.

(3) RIGHT WING Trailing Edge

1. Aileron -- CHECK freedom of movement and security.

(4) RIGHT WING

1. Wing Tie-Down -- DISCONNECT.
2. Main Wheel Tire -- CHECK for proper inflation.
3. Before first flight of the day and after each refueling, use sampler cup and drain small quantity of fuel from fuel tank sump quick-drain valve to check for water, sediment, and proper fuel grade.
4. Fuel Quantity -- CHECK VISUALLY for desired level.
5. Fuel Filler Cap -- SECURE.

For Flight Training Reference Only

(5) NOSE

1. Engine Oil Level -- CHECK, do not operate with less than four quarts. Fill to six quarts for extended flight.
2. Before first flight of the day and after each refueling, pull out strainer drain knob for about four seconds to clear fuel strainer of possible water and sediment. Check strainer drain closed. If water is observed, the fuel system may contain additional water, and further draining of the system at the strainer, fuel tank sumps, and fuel line drain plug will be necessary.
3. Propeller and Spinner -- CHECK for nicks and security.
4. Carburetor Air Filter -- CHECK for restrictions by dust or other foreign matter.
5. Landing Light(s) -- CHECK for condition and cleanliness.
6. Nose Wheel Strut and Tire -- CHECK for proper inflation.
7. Nose Tie-Down -- DISCONNECT.
8. Static Source Opening (left side of fuselage) -- CHECK for stoppage.

(6) LEFT WING

1. Main Wheel Tire -- CHECK for proper inflation.
2. Before first flight of day and after each refueling, use sampler cup and drain small quantity of fuel from fuel tank sump quick-drain valve to check for water, sediment and proper fuel grade.
3. Fuel Quantity -- CHECK VISUALLY for desired level.
4. Fuel Filler Cap -- SECURE.

(7) LEFT WING Leading Edge

1. Pitot Tube Cover -- REMOVE and check opening for stoppage.
2. Stall Warning Opening -- CHECK for stoppage. To check the system, place a clean handkerchief over the vent opening and apply suction; a sound from the warning horn will confirm system operation.
3. Fuel Tank Vent Opening -- CHECK for stoppage.
4. Wing Tie-Down -- DISCONNECT.

(8) LEFT WING Trailing Edge

1. Aileron -- CHECK freedom of movement and security.

BEFORE STARTING ENGINE

1. Preflight Inspection -- COMPLETE.

For Flight Training Reference Only

2. Seats, Belts, Shoulder Harnesses -- ADJUST and LOCK.
3. Fuel Shutoff Valve -- ON.
4. Radios, Electrical Equipment -- OFF.
5. Brakes -- TEST and SET.
6. Circuit Breakers -- CHECK IN.

STARTING ENGINE (Temperatures Above Freezing)

NOTE

For cold weather starting procedures, refer to page 4-21.

1. Mixture -- RICH.
2. Carburetor Heat -- COLD.
3. Prime -- AS REQUIRED (up to 3 strokes - none if engine is warm).
4. Throttle -- OPEN 1/2 INCH (CLOSED if engine is warm).
5. Propeller Area -- CLEAR.
6. Master Switch -- ON.
7. Ignition Switch -- START (release when engine starts).
8. Throttle -- ADJUST for 1000 RPM or less.
9. Oil Pressure -- CHECK.
10. Flashing Beacon and Navigation Lights -- ON as required.
11. Radios -- ON.

BEFORE TAKEOFF

1. Parking Brake -- SET.
2. Cabin Doors -- CLOSED and LATCHED.
3. Flight Controls -- FREE and CORRECT.
4. Flight Instruments -- SET.
5. Fuel Shutoff Valve -- ON.
6. Mixture -- RICH (below 3000 feet).
7. Elevator Trim -- TAKEOFF.
8. Throttle -- 1700 RPM.
   a. Magnetos -- CHECK (RPM drop should not exceed 125 RPM on either magneto or 50 RPM differential between magnetos).
   b. Carburetor Heat -- CHECK (for RPM drop).
   c. Engine Instruments and Ammeter -- CHECK.
   d. Suction Gage -- CHECK.
   e. Throttle -- 1000 RPM OR LESS.
9. Radios -- SET.
10. Strobe Lights -- AS DESIRED.
11. Throttle Friction Lock -- ADJUST.
12. Brakes -- RELEASE.

For Flight Training Reference Only

TAKEOFF

NORMAL TAKEOFF

1. Wing Flaps -- 0°- 10°.
2. Carburetor Heat -- COLD.
3. Throttle -- FULL OPEN.
4. Elevator Control -- LIFT NOSE WHEEL at 50 KIAS.
5. Climb Speed -- 65-75 KIAS.

SHORT FIELD TAKEOFF

1. Wing Flaps -- 10°.
2. Carburetor Heat -- COLD.
3. Brakes -- APPLY.
4. Throttle -- FULL OPEN.
5. Mixture -- RICH (above 3000 feet, LEAN to obtain maximum RPM).
6. Brakes -- RELEASE.
7. Elevator Control -- SLIGHTLY TAIL LOW.
8. Climb Speed -- 54 KIAS (until all obstacles are cleared).
9. Wing Flaps -- RETRACT slowly after reaching 60 KIAS.

ENROUTE CLIMB

1. Airspeed -- 70-80 KIAS.

NOTE

If a maximum performance climb is necessary, use speeds shown in the Rate Of Climb chart in Section 5.

2. Throttle -- FULL OPEN.
3. Mixture -- RICH below 3000 feet, LEAN for maximum RPM above 3000 feet.

CRUISE

1. Power -- 1900-2550 RPM (no more than 75%).
2. Elevator Trim -- ADJUST.
3. Mixture -- LEAN.

For Flight Training Reference Only

DESCENT

1. Mixture -- ADJUST for smooth operation (full rich for idle power).
2. Power -- AS DESIRED.
3. Carburetor Heat -- FULL HEAT AS REQUIRED.

BEFORE LANDING

1. Seats, Belts, Harnesses -- ADJUST and LOCK.
2. Mixture -- RICH.
3. Carburetor Heat -- ON (apply full heat before reducing power).

LANDING

NORMAL LANDING

1. Airspeed -- 60-70 KIAS (flaps UP).
2. Wing Flaps -- AS DESIRED (below 85 KIAS).
3. Airspeed -- 55-65 KIAS (flaps DOWN).
4. Touchdown -- MAIN WHEELS FIRST.
5. Landing Roll -- LOWER NOSE WHEEL GENTLY.
6. Braking -- MINIMUM REQUIRED.

SHORT FIELD LANDING

1. Airspeed -- 60-70 KIAS (flaps UP).
2. Wing Flaps -- 30° (below 85 KIAS).
3. Airspeed -- MAINTAIN 54 KIAS.
4. Power -- REDUCE to idle as obstacle is cleared.
5. Touchdown -- MAIN WHEELS FIRST.
6. Brakes -- APPLY HEAVILY.
7. Wing Flaps -- RETRACT.

BALKED LANDING

1. Throttle -- FULL OPEN.
2. Carburetor Heat -- COLD.
3. Wing Flaps -- RETRACT to 20°.
4. Airspeed -- 55 KIAS.
5. Wing Flaps -- RETRACT (slowly).

For Flight Training Reference Only

AFTER LANDING

1. Wing Flaps -- UP.
2. Carburetor Heat -- COLD.

SECURING AIRPLANE

1. Parking Brake -- SET.
2. Radios, Electrical Equipment -- OFF.
3. Mixture -- IDLE CUT-OFF (pull full out).
4. Ignition Switch -- OFF.
5. Master Switch -- OFF.
6. Control Lock -- INSTALL.

For Flight Training Reference Only

AMPLIFIED PROCEDURES

STARTING ENGINE (Temperatures Above Freezing)

During engine starting, open the throttle approximately 1/2 inch. In warm weather, one stroke of the primer should be sufficient. In temperatures near freezing, up to 3 strokes of the primer may be necessary. As the engine starts, slowly adjust the throttle as required for 1000 RPM or less. If the engine is still warm from previous operation, it may be started with the throttle closed and no priming.

Weak intermittent firing followed by puffs of black smoke from the exhaust stack indicates overpriming or flooding. Excess fuel can be cleared from the combustion chambers by the following procedure: set the mixture control in the idle cut-off position, the throttle full open, and crank the engine through several revolutions with the starter. Repeat the starting procedure without any additional priming.

If the engine is underprimed (most likely in cold weather with a cold engine) it will not fire at all, and additional priming will be necessary.

After starting, if the oil gage does not begin to show pressure within 30 seconds in the summertime and about twice that long in very cold weather, stop the engine and investigate. Lack of oil pressure can cause serious engine damage. After starting, avoid the use of carburetor heat unless icing conditions prevail.

NOTE

Details concerning cold weather starting and operation at temperatures below freezing may be found under Cold Weather Operation paragraphs in this section.

TAXIING

When taxiing, it is important that speed and use of brakes be held to a minimum and that all controls be utilized (see Taxiing Diagram, figure 4-2) to maintain directional control and balance.

For Flight Training Reference Only

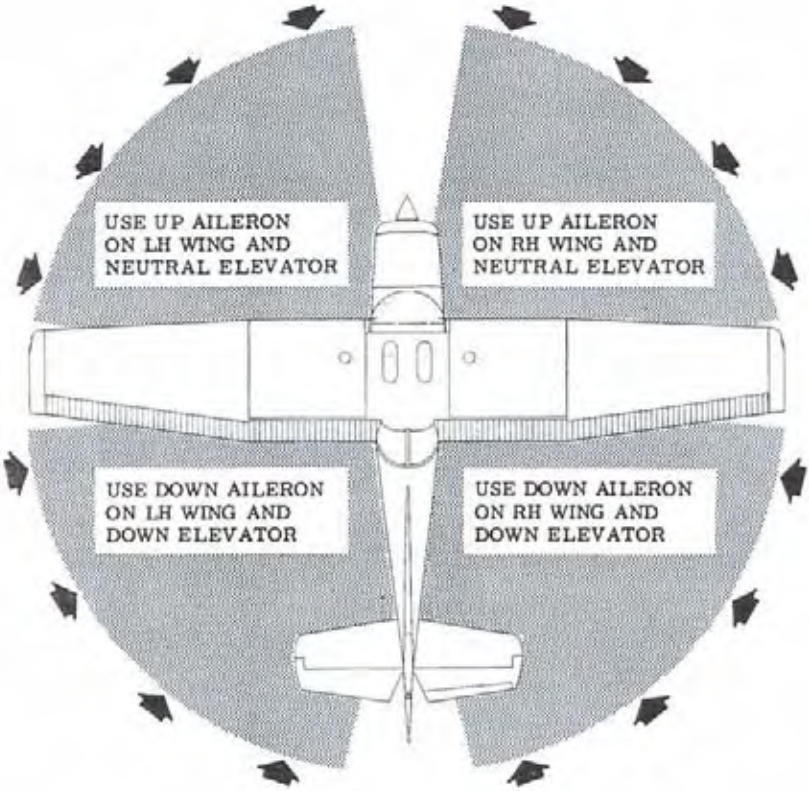

CODE

WIND DIRECTION

NOTE

Strong quartering tail winds require caution. Avoid sudden bursts of the throttle and sharp braking when the airplane is in this attitude. Use the steerable nose wheel and rudder to maintain direction.

Figure 4-2. Taxiing Diagram

For Flight Training Reference Only

The carburetor heat control knob should be pushed full in during all ground operations unless heat is absolutely necessary. When the knob is pulled out to the heat position, air entering the engine is not filtered.

Taxiing over loose gravel or cinders should be done at low engine speed to avoid abrasion and stone damage to the propeller tips.

The nose wheel is designed to automatically center straight ahead when the nose strut is fully extended. In the event the nose strut is over-inflated and the airplane is loaded to a rearward center of gravity position, it may be necessary to partially compress the strut to permit steering. This can be accomplished prior to taxiing by depressing the airplane nose (by hand) or during taxi by sharply applying brakes.

BEFORE TAKEOFF

WARM-UP

Most of the warm-up will have been conducted during taxi, and additional warm-up before takeoff should be restricted to the checklist procedures. Since the engine is closely cowled for efficient in-flight cooling, precautions should be taken to avoid overheating on the ground.

MAGNETO CHECK

The magneto check should be made at 1700 RPM as follows. Move ignition switch first to R position and note RPM. Next move switch back to BOTH to clear the other set of plugs. Then move switch to the L position, note RPM and return the switch to the BOTH position. RPM drop should not exceed 125 RPM on either magneto or show greater than 50 RPM differential between magnetos. If there is a doubt concerning operation of the ignition system, RPM checks at higher engine speeds will usually confirm whether a deficiency exists.

An absence of RPM drop may be an indication of faulty grounding of one side of the ignition system or should be cause for suspicion that the magneto timing is set in advance of the setting specified.

ALTERNATOR CHECK

Prior to flights where verification of proper alternator and alternator control unit operation is essential (such as night or instrument flights), a positive verification can be made by loading the electrical system momentarily (3 to 5 seconds) with the landing light, or by operating the wing flaps during the engine runup (1700 RPM). The ammeter will remain

For Flight Training Reference Only

within a needle width of its initial position if the alternator and alternator control unit are operating properly.

TAKEOFF

POWER CHECK

It is important to check full-throttle engine operation early in the takeoff run. Any sign of rough engine operation or sluggish engine acceleration is good cause for discontinuing the takeoff. If this occurs, you are justified in making a thorough full-throttle static runup before another takeoff is attempted. The engine should run smoothly and turn approximately 2280 to 2380 RPM with carburetor heat off and mixture leaned to maximum RPM.

Full throttle runups over loose gravel are especially harmful to propeller tips. When takeoffs must be made over a gravel surface, it is very important that the throttle be advanced slowly. This allows the airplane to start rolling before high RPM is developed, and the gravel will be blown back of the propeller rather than pulled into it. When unavoidable small dents appear in the propeller blades, they should be immediately corrected as described in Section 8 under Propeller Care.

Prior to takeoff from fields above 3000 feet elevation, the mixture should be leaned to give maximum RPM in a full-throttle, static runup.

After full throttle is applied, adjust the throttle friction lock clockwise to prevent the throttle from creeping back from a maximum power position. Similar friction lock adjustment should be made as required in other flight conditions to maintain a fixed throttle setting.

WING FLAP SETTINGS

Normal takeoffs are accomplished with wing flaps 0°- 10°. Using 10° wing flaps reduces the total distance over an obstacle by approximately 10%. Flap deflections greater than 10° are not approved for takeoff. If 10° wing flaps are used for takeoff, they should be left down until all obstacles are cleared and a safe flap retraction speed of 60 KIAS is reached.

On a short field, 10° wing flaps and an obstacle clearance speed of 54 KIAS should be used. This speed provides the best overall climb speed to clear obstacles when taking into account turbulence often found near ground level.

Soft or rough field takeoffs are performed with 10° wing flaps by lifting

For Flight Training Reference Only

the airplane off the ground as soon as practical in a slightly tail-low attitude. If no obstacles are ahead, the airplane should be leveled off immediately to accelerate to a higher climb speed.

CROSSWIND TAKEOFF

Takeoffs into strong crosswinds normally are performed with the minimum flap setting necessary for the field length, to minimize the drift angle immediately after takeoff. With the ailerons partially deflected into the wind, the airplane is accelerated to a speed slightly higher than normal, and then pulled off abruptly to prevent possible settling back to the runway while drifting. When clear of the ground, make a coordinated turn into the wind to correct for drift.

ENROUTE CLIMB

Normal climbs are performed with flaps up and full throttle and at speeds 5 to 10 knots higher than best rate-of-climb speeds for the best combination of performance, visibility and engine cooling. The mixture should be full rich below 3000 feet and may be leaned above 3000 feet for smoother operation or to obtain maximum RPM. For maximum rate of climb, use the best rate-of-climb speeds shown in the Rate Of Climb chart in Section 5. If an obstruction dictates the use of a steep climb angle, the best angle-of-climb speed should be used with flaps up and maximum power. Climbs at speeds lower than the best rate-of-climb speed should be of short duration to improve engine cooling.

CRUISE

Normal cruising is performed between 55% and 75% power. The engine RPM and corresponding fuel consumption for various altitudes can be determined by using your Cessna Power Computer or the data in Section 5.

NOTE

> Cruising should be done at a minimum of 75% power until a total of 25 hours has accumulated or oil consumption has stabilized. Operation at this higher power will ensure proper seating of the rings and is applicable to new engines, and engines in service following cylinder replacement or top overhaul of one or more cylinders.

The data in Section 5 shows the increased range and improved fuel economy that is obtainable when operating at lower power settings. The use of lower power settings and the selection of cruise altitude on the basis of the most favorable wind conditions are significant factors that should be considered on every trip to reduce fuel consumption.

For Flight Training Reference Only

	75% POWER		65% POWER		55% POWER	
ALTITUDE	KTAS	NMPG	KTAS	NMPG	KTAS	NMPG
Sea Level	100	16.4	94	17.8	87	19.3
4000 Feet	103	17.0	97	18.4	89	19.8
8000 Feet	107	17.6	100	18.9	91	20.4
Standard Conditions					Zero Wind	

Figure 4-3. Cruise Performance Table

The Cruise Performance Table, figure 4-3, shows the true airspeed and nautical miles per gallon during cruise for various altitudes and percent powers. This table should be used as a guide, along with the available winds aloft information, to determine the most favorable altitude and power setting for a given trip.

To achieve the recommended lean mixture fuel consumption figures shown in Section 5, the mixture should be leaned until engine RPM peaks and drops 25-50 RPM. At lower powers it may be necessary to enrichen the mixture slightly to obtain smooth operation.

Carburetor ice, as evidenced by an unexplained drop in RPM, can be removed by application of full carburetor heat. Upon regaining the original RPM (with heat off), use the minimum amount of heat (by trial and error) to prevent ice from forming. Since the heated air causes a richer mixture, readjust the mixture setting when carburetor heat is to be used continuously in cruise flight.

The use of full carburetor heat is recommended during flight in very heavy rain to avoid the possibility of engine stoppage due to excessive water ingestion. The mixture setting should be readjusted for smoothest operation.

LEANING WITH A CESSNA ECONOMY MIXTURE INDICATOR (EGT)

Exhaust gas temperature (EGT) as shown on the optional Cessna Economy Mixture Indicator may be used as an aid for mixture leaning in cruising flight at 75% power or less. To adjust the mixture, using this indicator, lean to establish the peak EGT as a reference point and then

For Flight Training Reference Only

MIXTURE DESCRIPTION	EXHAUST GAS TEMPERATURE
RECOMMENDED LEAN (Pilot's Operating Handbook and Power Computer)	25°F Rich of Peak EGT
BEST ECONOMY	Peak EGT

Figure 4-4. EGT Table

enrichen the mixture by the desired increment based on figure 4-4.

As noted in this table, operation at peak EGT provides the best fuel economy. This results in approximately 8% greater range than shown in this handbook accompanied by approximately a 4 knot decrease in speed.

Under some conditions, engine roughness may occur while operating at peak EGT. In this case, operate at the Recommended Lean mixture. Any change in altitude or throttle position will require a recheck of EGT indication.

FUEL SAVINGS PROCEDURES FOR FLIGHT TRAINING OPERATIONS

For best fuel economy during flight training operations, the following procedures are recommended.

1. Use 55% to 60% power while transitioning to and from the practice area (approximately 2200-2250 RPM).
2. Lean the mixture for maximum RPM during climbs above 3000 feet. The mixture may be left leaned for practicing such maneuvers as stalls.
3. Lean the mixture for maximum RPM during all operations at any altitude, including those below 3000 feet, when using 75% or less power.

NOTE

When cruising at 75% or less power, the mixture may be further leaned until the RPM peaks and drops 25-50 RPM. This is especially applicable to cross-country training flights, but may also be practiced during transition flights

For Flight Training Reference Only

to and from the practice area.

Using the above recommended procedures can provide fuel savings of up to 13% when compared to typical training operations at a full rich mixture.

STALLS

The stall characteristics are conventional for the flaps up and flaps down condition. The stall warning horn produces a steady signal 5 to 10 knots before the actual stall is reached and remains on until the airplane flight attitude is changed. Stall speeds for various combinations of flap setting and bank angle are summarized in Section 5.

SPINS

Intentional spins are approved in this airplane (see Section 2). Before attempting to perform spins, however, several items should be carefully considered to assure a safe flight. No spins should be attempted without first having received dual instruction in both spin entries and spin recoveries from a qualified instructor who is familiar with the spin characteristics of the Cessna 152.

The cabin should be clean and all loose equipment (including the microphone) should be stowed. For a solo flight in which spins will be conducted, the copilot's seat belt and shoulder harness should be secured. **Spins with baggage loadings or occupied child's seat are not approved.**

The seat belts and shoulder harnesses should be adjusted to provide proper restraint during all anticipated flight conditions. However, care should be taken to ensure that the pilot can easily reach the flight controls and produce maximum control travels.

It is recommended that, where feasible, entries be accomplished at high enough altitude that recoveries are completed 4000 feet or more above ground level. At least 1000 feet of altitude loss should be allowed for a 1-turn spin and recovery, while a 6-turn spin and recovery may require somewhat more than twice that amount. For example, the recommended entry altitude for a 6-turn spin would be 6000 feet above ground level. In any case, entries should be planned so that recoveries are completed well above the minimum 1500 feet above ground level required by FAR 91.71. Another reason for using high altitudes for practicing spins is that a greater field of view is provided which will assist in maintaining pilot orientation.

For Flight Training Reference Only

The normal entry is made from a power-off stall. As the stall is approached, the elevator control should be smoothly pulled to the full aft position. Just prior to reaching the stall "break", rudder control in the desired direction of the spin rotation should be applied so that full rudder deflection is reached almost simultaneously with reaching full aft elevator. A slightly greater rate of deceleration than for normal stall entries or the use of partial power at the entry will assure more consistent and positive entries to the spin. Both elevator and rudder controls should be held full with the spin until the spin recovery is initiated. An inadvertent relaxation of either of these controls could result in the development of a nose-down spiral.

NOTE

Careful attention should be taken to assure that the aileron control is neutral during all phases of the spin since any aileron deflection in the direction of the spin may alter the spin characteristics by increasing the rotation rate and changing the pitch attitude.

For the purpose of training in spins and spin recoveries, a 1 to 2-turn spin is adequate and should be used. Up to 2 turns, the spin will progress to a fairly rapid rate of rotation and a steep attitude. Application of recovery controls will produce prompt recoveries of from 1/4 to 1/2 of a turn.

If the spin is continued beyond the 2 to 3-turn range, some change in character of the spin may be noted. Rotation rates may vary and some additional sideslip may be felt. Normal recoveries from such extended spins may take up to a full turn or more.

Regardless of how many turns the spin is held or how it is entered, the following recovery technique should be used:

1. VERIFY THAT AILERONS ARE NEUTRAL AND THROTTLE IS IN IDLE POSITION.
2. APPLY AND **HOLD** FULL RUDDER OPPOSITE TO THE DIRECTION OF ROTATION.
3. JUST **AFTER** THE RUDDER REACHES THE STOP, MOVE THE CONTROL WHEEL **BRISKLY** FORWARD FAR ENOUGH TO BREAK THE STALL. Full down elevator may be required at aft center of gravity loadings to assure optimum recoveries.
4. **HOLD** THESE CONTROL INPUTS UNTIL ROTATION STOPS. Premature relaxation of the control inputs may extend the recovery.
5. AS ROTATION STOPS, NEUTRALIZE RUDDER, AND MAKE A SMOOTH RECOVERY FROM THE RESULTING DIVE.

For Flight Training Reference Only

NOTE

If disorientation precludes a visual determination of the direction of rotation, the symbolic airplane in the turn coordinator may be referred to for this information.

Variations in basic airplane rigging or in weight and balance due to installed equipment or cockpit occupancy can cause differences in behavior, particularly in extended spins. These differences are normal and will result in variations in the spin characteristics and in the recovery lengths for spins of more than 3 turns. However, the above recovery procedure should always be used and will result in the most expeditious recovery from any spin.

Intentional spins with flaps extended are prohibited, since the high speeds which may occur during recovery are potentially damaging to the flap/wing structure.

LANDING

Normal landing approaches can be made with power-on or power-off at speeds of 60 to 70 KIAS with flaps up, and 55 to 65 KIAS with flaps down. Surface winds and air turbulence are usually the primary factors in determining the most comfortable approach speeds.

Actual touchdown should be made with power-off and on the main wheels first. The nose wheel should be lowered smoothly to the runway as speed is diminished.

SHORT FIELD LANDING

For a short field landing in smooth air conditions, make an approach at 54 KIAS with 30° flaps using enough power to control the glide path. After all approach obstacles are cleared, progressively reduce power and maintain 54 KIAS by lowering the nose of the airplane. Touchdown should be made with power-off and on the main wheels first. Immediately after touchdown, lower the nose wheel and apply heavy braking as required. For maximum brake effectiveness, retract the flaps, hold full nose-up elevator, and apply maximum brake pressure without sliding the tires.

Slightly higher approach speeds should be used under turbulent air conditions.

CROSSWIND LANDING

When landing in a strong crosswind, use the minimum flap setting

For Flight Training Reference Only

required for the field length. Use a wing low, crab, or a combination method of drift correction and land in a nearly level attitude.

BALKED LANDING

In a balked landing (go-around) climb, the wing flap setting should be reduced to 20° immediately after full power is applied. Upon reaching a safe airspeed, the flaps should be slowly retracted to the full up position.

COLD WEATHER OPERATION

Prior to starting with temperatures below freezing, it is advisable to pull the propeller through several times by hand to "break loose" or "limber" the oil, thus conserving battery energy.

NOTE

When pulling the propeller through by hand, treat it as if the ignition switch is turned on. A loose or broken ground wire on either magneto could cause the engine to fire.

Preheat is generally required with outside air temperatures below -18°C (0°F) and is recommended when temperatures are below -7°C (20°F).

Cold weather starting procedures are as follows:

With Preheat:

1. Ignition Switch -- OFF.
2. Throttle -- CLOSED.
3. Mixture -- IDLE CUT-OFF.
4. Parking Brake -- SET.
5. Prime -- 2 to 4 STROKES as the propeller is being turned over by hand. RECHARGE for priming after engine start.

NOTE

Caution should be used to ensure the brakes are set or a qualified person is at the controls.

6. Mixture -- RICH.
7. Throttle -- OPEN 1/2 to 3/4 INCH.
8. Propeller Area -- CLEAR.

For Flight Training Reference Only

9. Master Switch -- ON.
10. Ignition Switch -- START (release when engine starts).
11. Prime -- AS REQURIED until the engine runs smoothly.
12. Throttle -- ADJUST for 1200 to 1500 RPM for approximately one minute after which the RPM can be lowered to 1000 or less.
13. Oil Pressure -- CHECK.
14. Primer -- LOCK.

Without Preheat:

The procedure for starting without preheat is the same as with preheat except the engine should be primed an additional two strokes while pulling the propeller through by hand. Carburetor heat should be applied after the engine starts. Leave the carburetor heat on until the engine runs smoothly.

NOTE

> If the engine fires but does not start or continue running, repeat the above starting procedure beginning with step 6. If the engine does not start during the first few attempts, or if engine firing diminishes in strength, it is possible that the spark plugs have been frosted over, in which case preheat must be used before another start is attempted.

During cold weather operations, no indication will be apparent on the oil temperature gage prior to takeoff if outside air temperatures are very cold. After a suitable warm-up period (2 to 5 minutes at 1000 RPM), accelerate the engine several times to higher engine RPM. If the engine accelerates smoothly and oil pressure remains normal and steady, the airplane is ready for takeoff.

When operating in temperatures below -18°C, avoid using partial carburetor heat. Partial heat may increase the carburetor air temperature to the 0° to 21°C range, where icing is critical under certain atmospheric conditions.

NOISE ABATEMENT

Increased emphasis on improving the quality of our environment requires renewed effort on the part of all pilots to minimize the effect of airplane noise on the public.

We, as pilots, can demonstrate our concern for environmental improvement, by application of the following suggested procedures, and thereby tend to build public support for aviation:

For Flight Training Reference Only

1. Pilots operating aircraft under VFR over outdoor assemblies of persons, recreational and park areas, and other noise-sensitive areas should make every effort to fly not less than 2000 feet above the surface, weather permitting, even though flight at a lower level may be consistent with the provisions of government regulations.
2. During departure from or approach to an airport, climb after takeoff and descent for landing should be made so as to avoid prolonged flight at low altitude near noise-sensitive areas.

NOTE

The above recommended procedures do not apply where they would conflict with Air Traffic Control clearances or instructions, or where, in the pilot's judgment, an altitude of less than 2000 feet is necessary for him to adequately exercise his duty to see and avoid other aircraft.

The certificated noise level for the Model 152 at 1670 pounds maximum weight is 64.8 dB(A). No determination has been made by the Federal Aviation Administration that the noise levels of this airplane are or should be acceptable or unacceptable for operation at, into, or out of, any airport.

For Flight Training Reference Only

SECTION 5
PERFORMANCE

TABLE OF CONTENTS

	Page
Introduction	5-3
Use of Performance Charts	5-3
Sample Problem	5-3
Takeoff	5-4
Cruise	5-5
Fuel Required	5-5
Landing	5-7
Demonstrated Operating Temperature	5-7
Figure 5-1, Airspeed Calibration	5-8
Figure 5-2, Temperature Conversion Chart	5-9
Figure 5-3, Stall Speeds	5-10
Figure 5-4, Takeoff Distance	5-11
Figure 5-5, Rate Of Climb - Maximum	5-12
Figure 5-6, Time, Fuel, And Distance To Climb	5-13
Figure 5-7, Cruise Performance	5-14
Figure 5-8, Range Profile - 24.5 Gallons Fuel	5-15
Range Profile - 37.5 Gallons Fuel	5-16
Figure 5-9, Endurance Profile - 24.5 Gallons Fuel	5-17
Endurance Profile - 37.5 Gallons Fuel	5-18
Figure 5-10, Landing Distance	5-19

For Flight Training Reference Only

INTRODUCTION

Performance data charts on the following pages are presented so that you may know what to expect from the airplane under various conditions, and also, to facilitate the planning of flights in detail and with reasonable accuracy. The data in the charts has been computed from actual flight tests with the airplane and engine in good condition and using average piloting techniques.

It should be noted that the performance information presented in the range and endurance profile charts allows for 45 minutes reserve fuel at the specified cruise power. Fuel flow data for cruise is based on the recommended lean mixture setting. Some indeterminate variables such as mixture leaning technique, fuel metering characteristics, engine and propeller condition, and air turbulence may account for variations of 10% or more in range and endurance. Therefore, it is important to utilize all available information to estimate the fuel required for the particular flight.

USE OF PERFORMANCE CHARTS

Performance data is presented in tabular or graphical form to illustrate the effect of different variables. Sufficiently detailed information is provided in the tables so that conservative values can be selected and used to determine the particular performance figure with reasonable accuracy.

SAMPLE PROBLEM

The following sample flight problem utilizes information from the various charts to determine the predicted performance data for a typical flight. The following information is known:

AIRPLANE CONFIGURATION	
Takeoff weight	1610 Pounds
Usable fuel	24.5 Gallons
TAKEOFF CONDITIONS	
Field pressure altitude	1500 Feet
Temperature	28°C (16°C above standard)
Wind component along runway	12 Knot Headwind
Field length	3500 Feet

For Flight Training Reference Only

CRUISE CONDITIONS

Total distance	265 Nautical Miles
Pressure altitude	5500 Feet
Temperature	20°C (16°C above standard)
Expected wind enroute	10 Knot Headwind

LANDING CONDITIONS

Field pressure altitude	2000 Feet
Temperature	25°C
Field length	3000 Feet

TAKEOFF

The takeoff distance chart, figure 5-4, should be consulted, keeping in mind that the distances shown are based on the short field technique. Conservative distances can be established by reading the chart at the next higher value of altitude and temperature. For example, in this particular sample problem, the takeoff distance information presented for a pressure altitude of 2000 feet and a temperature of 30°C should be used and results in the following:

Ground roll	980 Feet
Total distance to clear a 50-foot obstacle	1820 Feet

These distances are well within the available takeoff field length. However, a correction for the effect of wind may be made based on Note 3 of the takeoff chart. The correction for a 12 knot headwind is:

$$\frac{12 \text{ Knots}}{9 \text{ Knots}} \times 10\% = 13\% \text{ Decrease}$$

This results in the following distances, corrected for wind:

Ground roll, zero wind	980
Decrease in ground roll (980 feet × 13%)	127
Corrected ground roll	853 Feet

Total distance to clear a 50-foot obstacle, zero wind	1820
Decrease in total distance (1820 feet × 13%)	237
Corrected total distance to clear 50-foot obstacle	1583 Feet

For Flight Training Reference Only

CRUISE

The cruising altitude should be selected based on a consideration of trip length, winds aloft, and the airplane's performance. A typical cruising altitude and the expected wind enroute have been given for this sample problem. However, the power setting selection for cruise must be determined based on several considerations. These include the cruise performance characteristics presented in figure 5-7, the range profile chart presented in figure 5-8, and the endurance profile chart presented in figure 5-9.

The relationship between power and range is illustrated by the range profile chart. Considerable fuel savings and longer range result when lower power settings are used. For this sample problem, a cruise power of approximately 65% will be used.

The cruise performance chart, figure 5-7, is entered at 6000 feet altitude and 20°C above standard temperature. These values most nearly correspond to the planned altitude and expected temperature conditions. The engine speed chosen is 2400 RPM, which results in the following:

Power	64%
True airspeed	99 Knots
Cruise fuel flow	5.2 GPH

The power computer may be used to determine power and fuel consumption more accurately during the flight.

FUEL REQUIRED

The total fuel requirement for the flight may be estimated using the performance information in figures 5-6 and 5-7. For this sample problem, figure 5-6 shows that a climb from 2000 feet to 6000 feet requires 1 gallon of fuel. The corresponding distance during the climb is 9 nautical miles. These values are for a standard temperature (as shown on the climb chart) and are sufficiently accurate for most flight planning purposes. However, a further correction for the effect of temperature may be made as noted on the climb chart. The approximate effect of a non-standard temperature is to increase the time, fuel, and distance by 10% for each 10°C above standard temperature, due to the lower rate of climb. In this case, assuming a temperature 16°C above standard, the correction would be:

$$\frac{16°C}{10°C} \times 10\% = 16\% \text{ Increase}$$

For Flight Training Reference Only

With this factor included, the fuel estimate would be calculated as follows:

Fuel to climb, standard temperature	1.0
Increase due to non-standard temperature (1.0 × 16%)	0.2
Corrected fuel to climb	1.2 Gallons

Using a similar procedure for the distance to climb results in 10 nautical miles.

The resultant cruise distance is:

Total distance	265
Climb distance	-10
Cruise distance	255 Nautical Miles

With an expected 10 knot headwind, the ground speed for cruise is predicted to be:

$$\begin{array}{r} 99 \\ -10 \\ \hline 89 \text{ Knots} \end{array}$$

Therefore, the time required for the cruise portion of the trip is:

$$\frac{255 \text{ Nautical Miles}}{89 \text{ Knots}} = 2.9 \text{ Hours}$$

The fuel required for cruise is:

$$2.9 \text{ hours} \times 5.2 \text{ gallons/hour} = 15.1 \text{ Gallons}$$

The total estimated fuel required is as follows:

Engine start, taxi, and takeoff	0.8
Climb	1.2
Cruise	15.1
Total fuel required	17.1 Gallons

Once the flight is underway, ground speed checks will provide a more accurate basis for estimating the time enroute and the corresponding fuel required to complete the trip with ample reserve.

For Flight Training Reference Only

LANDING

A procedure similar to takeoff should be used for estimating the landing distance at the destination airport. Figure 5-10 presents landing distances for various airport altitude and temperature combinations using the short field technique. The distances corresponding to 2000 feet and 30°C are as follows:

Ground roll	535 Feet
Total distance to clear a 50-foot obstacle	1300 Feet

A correction for the effect of wind may be made based on Note 2 of the landing chart using the same procedure as outlined for takeoff.

DEMONSTRATED OPERATING TEMPERATURE

Satisfactory engine cooling has been demonstrated for this airplane with an outside air temperature 23°C above standard. This is not to be considered as an operating limitation. Reference should be made to Section 2 for engine operating limitations.

For Flight Training Reference Only

AIRSPEED CALIBRATION

CONDITIONS:
Power required for level flight or maximum rated RPM dive.

FLAPS UP											
KIAS	40	50	60	70	80	90	100	110	120	130	140
KCAS	46	53	60	69	78	88	97	107	117	127	136
FLAPS 10°											
KIAS	40	50	60	70	80	85	---	---	---	---	---
KCAS	44	52	61	70	80	84	---	---	---	---	---
FLAPS 30°											
KIAS	40	50	60	70	80	85	---	---	---	---	---
KCAS	43	51	61	71	82	87	---	---	---	---	---

Figure 5-1. Airspeed Calibration

For Flight Training Reference Only

TEMPERATURE CONVERSION CHART

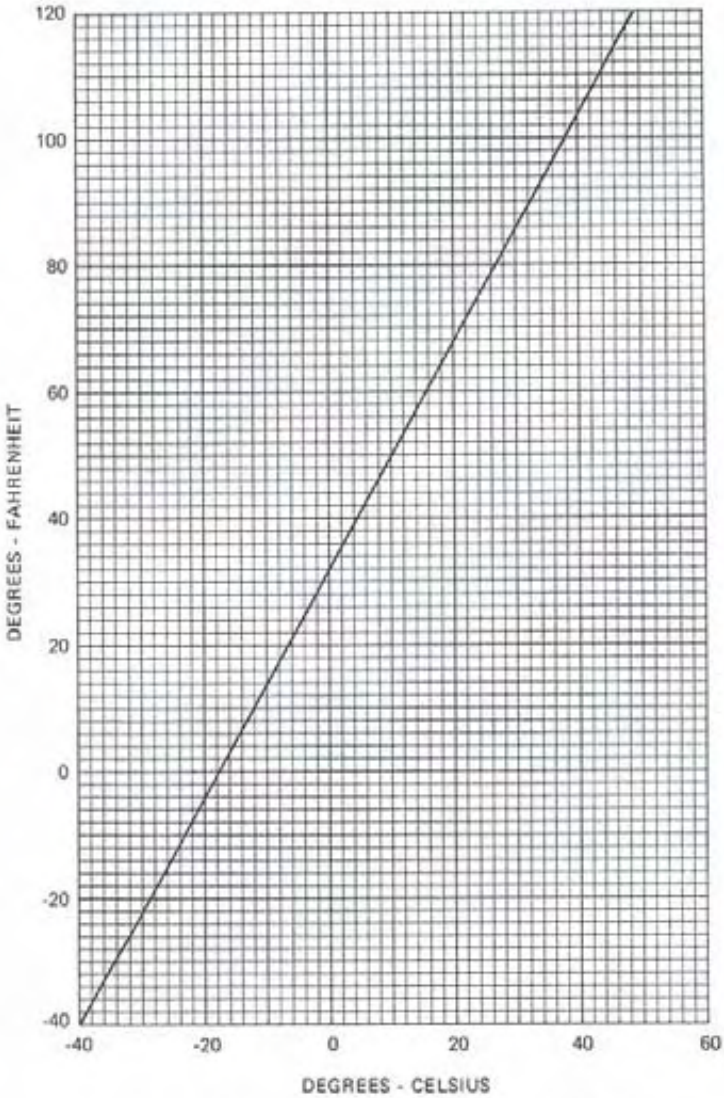

Figure 5-2. Temperature Conversion Chart

For Flight Training Reference Only

STALL SPEEDS

CONDITIONS:
Power Off

NOTES:
1. Altitude loss during a stall recovery may be as much as 160 feet.
2. KIAS values are approximate and are based on airspeed calibration data with power off.

MOST REARWARD CENTER OF GRAVITY

WEIGHT LBS	FLAP DEFLECTION	ANGLE OF BANK							
		0°		30°		45°		60°	
		KIAS	KCAS	KIAS	KCAS	KIAS	KCAS	KIAS	KCAS
1670	UP	36	46	39	49	43	55	51	65
	10°	36	43	39	46	43	51	51	61
	30°	31	41	33	44	37	49	44	58

MOST FORWARD CENTER OF GRAVITY

WEIGHT LBS	FLAP DEFLECTION	ANGLE OF BANK							
		0°		30°		45°		60°	
		KIAS	KCAS	KIAS	KCAS	KIAS	KCAS	KIAS	KCAS
1670	UP	40	48	43	52	48	57	57	68
	10°	40	46	43	49	48	55	57	65
	30°	35	43	38	46	42	51	49	61

Figure 5-3. Stall Speeds

For Flight Training Reference Only

297°
338°

WIND COMPONENTS

NOTE:
Maximum demonstrated crosswind velocity is 12 knots (not a limitation).

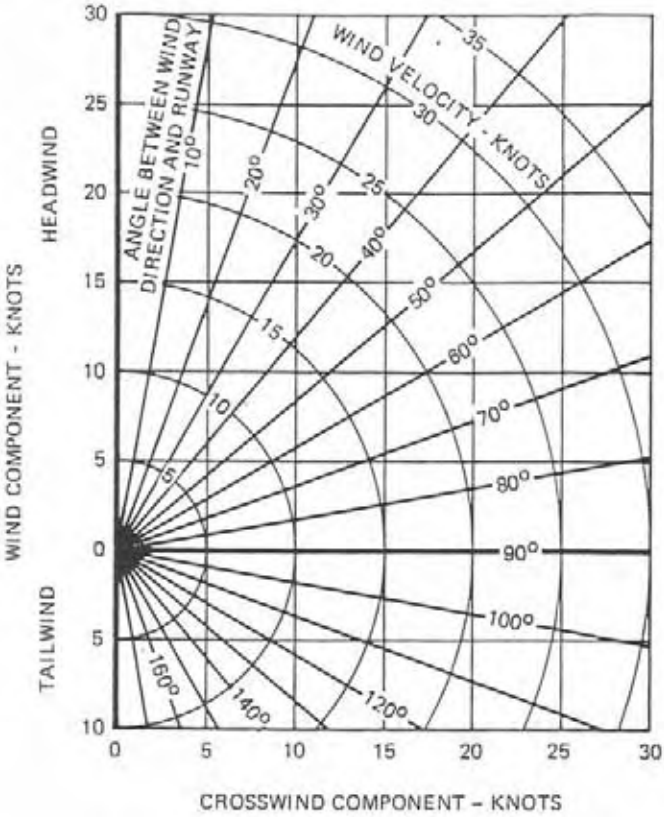

Figure 5-4. Wind Components

For Flight Training Reference Only

TAKEOFF DISTANCE

SHORT FIELD

CONDITIONS:
Flaps 10°
Full Throttle Prior to Brake Release
Paved, Level, Dry Runway
Zero Wind

NOTES:
1. Short field technique as specified in Section 4.
2. Prior to takeoff from fields above 3000 feet elevation, the mixture should be leaned to give maximum RPM in a full throttle, static runup.
3. Decrease distances 10% for each 9 knots headwind. For operation with tailwinds up to 10 knots, increase distances by 10% for each 2 knots.
4. For operation on a dry, grass runway, increase distances by 15% of the "ground roll" figure.

WEIGHT LBS	TAKEOFF SPEED KIAS		PRESS ALT FT	32°F 0°C		50°F 10°C		68°F 20°C		86°F 30°C		104°F 40°C	
	LIFT OFF	AT 50 FT		GRND ROLL	TOTAL TO CLEAR 50 FT OBS	GRND ROLL	TOTAL TO CLEAR 50 FT OBS	GRND ROLL	TOTAL TO CLEAR 50 FT OBS	GRND ROLL	TOTAL TO CLEAR 50 FT OBS	GRND ROLL	TOTAL TO CLEAR 50 FT OBS
1670	50	54	S.L.	640	1190	695	1290	755	1390	810	1495	875	1605
			1000	705	1310	765	1420	825	1530	890	1645	960	1770
			2000	775	1445	840	1565	910	1690	980	1820	1055	1960
			3000	855	1600	925	1730	1000	1870	1080	2020	1165	2185
			4000	940	1775	1020	1920	1100	2080	1190	2250	1285	2440
			5000	1040	1970	1125	2140	1215	2320	1315	2525	1420	2750
			6000	1145	2200	1245	2395	1345	2610	1455	2855	1570	3125
			7000	1270	2470	1375	2705	1490	2960	1615	3255	1745	3590
			8000	1405	2800	1525	3080	1655	3395	1795	3765	1940	4195

Figure 5-4. Takeoff Distance

For Flight Training Reference Only

RATE OF CLIMB

MAXIMUM

CONDITIONS:
Flaps Up
Full Throttle

NOTE:
Mixture leaned above 3000 feet for maximum RPM.

WEIGHT LBS	PRESS ALT FT	CLIMB SPEED KIAS	RATE OF CLIMB - FPM			
			-20°C	0°C	20°C	40°C
1670	S.L.	67	835	765	700	630
	2000	66	735	670	600	535
	4000	65	635	570	505	445
	6000	63	535	475	415	355
	8000	62	440	380	320	265
	10,000	61	340	285	230	175
	12,000	60	245	190	135	85

Figure 5-5. Rate of Climb

For Flight Training Reference Only

TIME, FUEL, AND DISTANCE TO CLIMB

MAXIMUM RATE OF CLIMB

CONDITIONS:
Flaps Up
Full Throttle
Standard Temperature

NOTES:
1. Add 0.8 of a gallon of fuel for engine start, taxi and takeoff allowance.
2. Mixture leaned above 3000 feet for maximum RPM.
3. Increase time, fuel and distance by 10% for each 10°C above standard temperature.
4. Distances shown are based on zero wind.

WEIGHT LBS	PRESSURE ALTITUDE FT	TEMP °C	CLIMB SPEED KIAS	RATE OF CLIMB FPM	FROM SEA LEVEL		
					TIME MIN	FUEL USED GALLONS	DISTANCE NM
1670	S.L.	15	67	715	0	0	0
	1000	13	66	675	1	0.2	2
	2000	11	66	630	3	0.4	3
	3000	9	65	590	5	0.7	5
	3500	8	65	570	5.5	0.8	6
	4000	7	65	550	6	0.9	7
	5000	5	64	505	8	1.2	9
	5500	4	63.5	485	9	1.3	10.5
	6000	3	63	465	10	1.4	12
	6500	2	63	445	11.5	1.55	13
	7000	1	63	425	13	1.7	14
	8000	-1	62	380	15	2.0	17
	9000	-3	62	340	18	2.3	21
	10,000	-5	61	300	21	2.6	25
	11,000	-7	61	255	25	3.0	29
	12,000	-9	60	215	29	3.4	34

Figure 5-6. Time, Fuel, and Distance to Climb

For Flight Training Reference Only

CRUISE PERFORMANCE

CONDITIONS:
1670 Pounds
Recommended Lean Mixture (See Section 4, Cruise)

NOTE:
Cruise speeds are shown for an airplane equipped with speed fairings which increase the speeds by approximately two knots.

PRESSURE ALTITUDE FT	RPM	20°C BELOW STANDARD TEMP			STANDARD TEMPERATURE			20°C ABOVE STANDARD TEMP		
		% BHP	KTAS	GPH	% BHP	KTAS	GPH	% BHP	KTAS	GPH
2000	2400	- - -	- - -	- - -	75	101	6.1	70	101	5.7
	2300	71	97	5.7	66	96	5.4	63	95	5.1
	2200	62	92	5.1	59	91	4.8	56	90	4.6
	2100	55	87	4.5	53	86	4.3	51	85	4.2
	2000	49	81	4.1	47	80	3.9	46	79	3.8
4000	2450	- - -	- - -	- - -	75	103	6.1	70	102	5.7
	2400	76	102	6.1	71	101	5.7	67	100	5.4
	2300	67	96	5.4	63	95	5.1	60	95	4.9
	2200	60	91	4.8	56	90	4.6	54	89	4.4
	2100	53	86	4.4	51	85	4.2	49	84	4.0
	2000	48	81	3.9	46	80	3.8	45	78	3.7
6000	2500	- - -	- - -	- - -	75	105	6.1	71	104	5.7
	2400	72	101	5.8	67	100	5.4	64	99	5.2
	2300	64	96	5.2	60	95	4.9	57	94	4.7
	2200	57	90	4.6	54	89	4.4	52	88	4.3
	2100	51	85	4.2	49	84	4.0	48	83	3.9
	2000	46	80	3.8	45	79	3.7	44	77	3.6
8000	2550	- - -	- - -	- - -	75	107	6.1	71	106	5.7
	2500	76	105	6.2	71	104	5.8	67	103	5.4
	2400	68	100	5.5	64	99	5.2	61	98	4.9
	2300	61	95	5.0	58	94	4.7	55	93	4.5
	2200	55	90	4.5	52	89	4.3	51	87	4.2
	2100	49	84	4.1	48	83	3.9	46	82	3.8
10,000	2500	72	105	5.8	68	103	5.5	64	103	5.2
	2400	65	99	5.3	61	98	5.0	58	97	4.8
	2300	58	94	4.7	56	93	4.5	53	92	4.4
	2200	53	89	4.3	51	88	4.2	49	86	4.0
	2100	48	83	4.0	46	82	3.9	45	81	3.8
12,000	2450	65	101	5.3	62	100	5.0	59	99	4.8
	2400	62	99	5.0	59	97	4.8	56	96	4.6
	2300	56	93	4.6	54	92	4.4	52	91	4.3
	2200	51	88	4.2	49	87	4.1	48	85	4.0
	2100	47	82	3.9	45	81	3.8	44	79	3.7

Figure 5-7. Cruise Performance

For Flight Training Reference Only

RANGE PROFILE

45 MINUTES RESERVE
24.5 GALLONS USABLE FUEL

CONDITIONS:
1670 Pounds
Recommended Lean Mixture for Cruise
Standard Temperature
Zero Wind

NOTES:
1. This chart allows for the fuel used for engine start, taxi, takeoff and climb, and the distance during climb as shown in figure 5-6.
2. Performance is shown for an airplane equipped with speed fairings which increase the cruise speeds by approximately two knots.

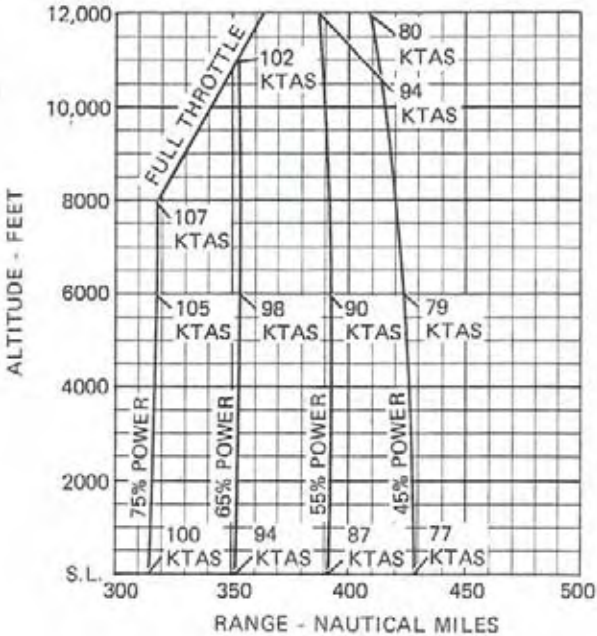

Figure 5-8. Range Profile (Sheet 1 of 2)

For Flight Training Reference Only

RANGE PROFILE

45 MINUTES RESERVE
37.5 GALLONS USABLE FUEL

CONDITIONS:
1670 Pounds
Recommended Lean Mixture for Cruise
Standard Temperature
Zero Wind

NOTES:
1. This chart allows for the fuel used for engine start, taxi, takeoff and climb, and the distance during climb as shown in figure 5-6.
2. Performance is shown for an airplane equipped with speed fairings which increase the cruise speeds by approximately two knots.

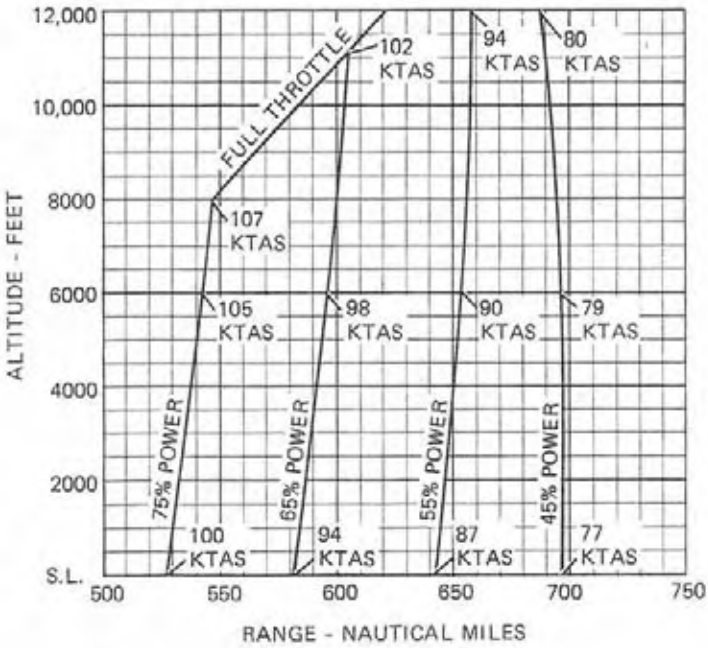

Figure 5-8. Range Profile (Sheet 2 of 2)

For Flight Training Reference Only

ENDURANCE PROFILE
45 MINUTES RESERVE
24.5 GALLONS USABLE FUEL

CONDITIONS:
1670 Pounds
Recommended Lean Mixture for Cruise
Standard Temperature

NOTE:
This chart allows for the fuel used for engine start, taxi, takeoff and climb, and the time during climb as shown in figure 5-6.

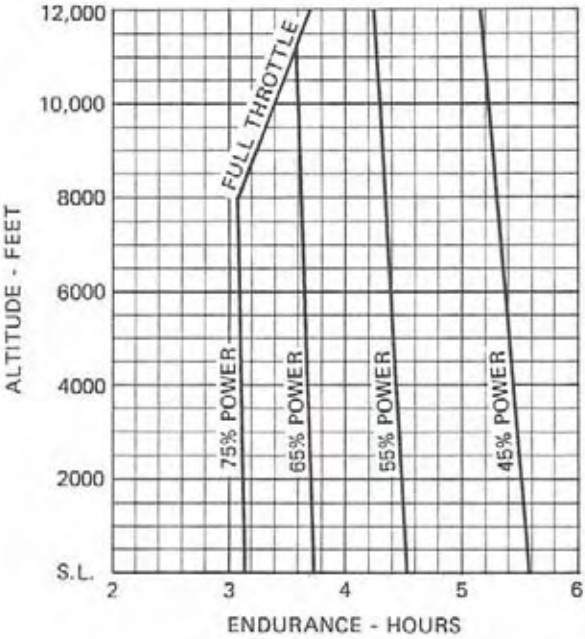

Figure 5-9. Endurance Profile (Sheet 1 of 2)

For Flight Training Reference Only

ENDURANCE PROFILE

45 MINUTES RESERVE
37.5 GALLONS USABLE FUEL

CONDITIONS:
1670 Pounds
Recommended Lean Mixture for Cruise
Standard Temperature

NOTE:
This chart allows for the fuel used for engine start, taxi, takeoff and climb, and the time during climb as shown in figure 5-6.

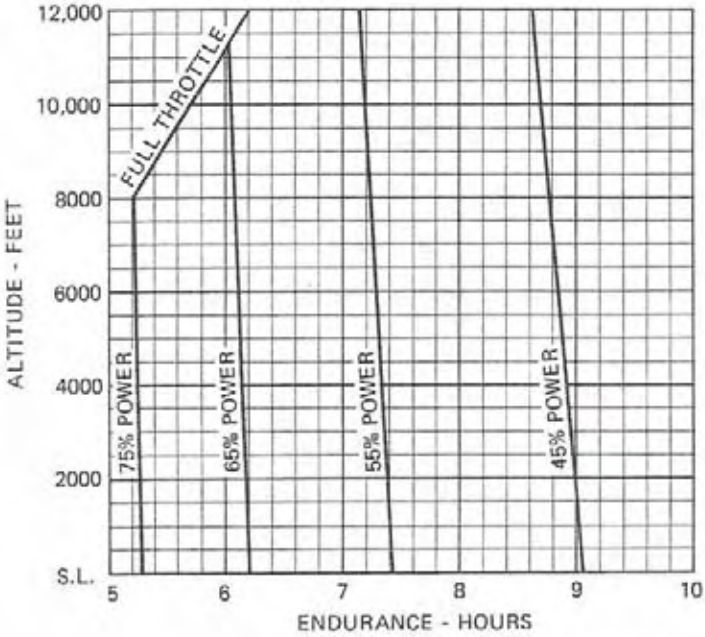

Figure 5-9. Endurance Profile (Sheet 2 of 2)

For Flight Training Reference Only

LANDING DISTANCE

SHORT FIELD

CONDITIONS:
Flaps 30°
Power Off
Maximum Braking
Paved, Level, Dry Runway
Zero Wind

NOTES:
1. Short field technique as specified in Section 4.
2. Decrease distances 10% for each 9 knots headwind. For operation with tailwinds up to 10 knots, increase distances by 10% for each 2 knots.
3. For operation on a dry, grass runway, increase distances by 45% of the "ground roll" figure.
4. If a landing with flaps up is necessary, increase the approach speed by 7 KIAS and allow for 35% longer distances.

WEIGHT LBS	SPEED AT 50 FT KIAS	PRESS ALT FT	32°F 0°C		50°F 10°C		68°F 20°C		86°F 30°C		104°F 40°C	
			GRND ROLL FT	TOTAL FT TO CLEAR 50 FT OBS	GRND ROLL FT	TOTAL FT TO CLEAR 50 FT OBS	GRND ROLL FT	TOTAL FT TO CLEAR 50 FT OBS	GRND ROLL FT	TOTAL FT TO CLEAR 50 FT OBS	GRND ROLL FT	TOTAL FT TO CLEAR 50 FT OBS
1670	54	S.L.	450	1160	465	1185	485	1215	500	1240	515	1265
		1000	465	1185	485	1215	500	1240	520	1270	535	1295
		2000	485	1215	500	1240	520	1270	535	1300	555	1330
		3000	500	1240	520	1275	540	1305	560	1335	575	1360
		4000	520	1275	540	1305	560	1335	580	1370	600	1400
		5000	540	1305	560	1335	580	1370	600	1400	620	1435
		6000	560	1340	580	1370	605	1410	625	1440	645	1475
		7000	585	1375	605	1410	625	1440	650	1480	670	1515
		8000	605	1410	630	1450	650	1480	675	1520	695	1555

Figure 5-11. Landing Distance

For Flight Training Reference Only

SECTION 6
WEIGHT & BALANCE/ EQUIPMENT LIST

TABLE OF CONTENTS

	Page
Introduction	6-3
Airplane Weighing Procedures	6-3
Weight And Balance	6-6
Equipment List	6-13

For Flight Training Reference Only

INTRODUCTION

This section describes the procedure for establishing the basic empty weight and moment of the airplane. Sample forms are provided for reference. Procedures for calculating the weight and moment for various operations are also provided. A comprehensive list of all Cessna equipment available for this airplane is included at the back of this section.

It should be noted that specific information regarding the weight, arm, moment and installed equipment list for this airplane can only be found in the appropriate weight and balance records carried in the airplane.

It is the responsibility of the pilot to ensure that the airplane is loaded properly.

AIRPLANE WEIGHING PROCEDURES

1. Preparation:
   a. Inflate tires to recommended operating pressures.
   b. Remove the fuel tank sump quick-drain fittings and fuel line drain plug to drain all fuel.
   c. Remove oil sump drain plug to drain all oil.
   d. Move sliding seats to the most forward position.
   e. Raise flaps to the fully retracted position.
   f. Place all control surfaces in neutral position.
2. Leveling:
   a. Place scales under each wheel (500# minimum capacity for scales).
   b. Deflate nose tire and/or lower or raise the nose strut to center bubble on level (see figure 6-1).
3. Weighing:
   a. With the airplane level and brakes released, record the weight shown on each scale. Deduct the tare, if any, from each reading.
4. Measuring:
   a. Obtain measurement A by measuring horizontally (along the airplane center line) from a line stretched between the main wheel centers to a plumb bob dropped from the firewall.
   b. Obtain measurement B by measuring horizontally and parallel to the airplane center line, from center of nose wheel axle, left side, to a plumb bob dropped from the line between the main wheel centers. Repeat on right side and average the measurements.
5. Using weights from item 3 and measurements from item 4, the airplane weight and C.G. can be determined.
6. Basic Empty Weight may be determined by completing figure 6-1.

For Flight Training Reference Only

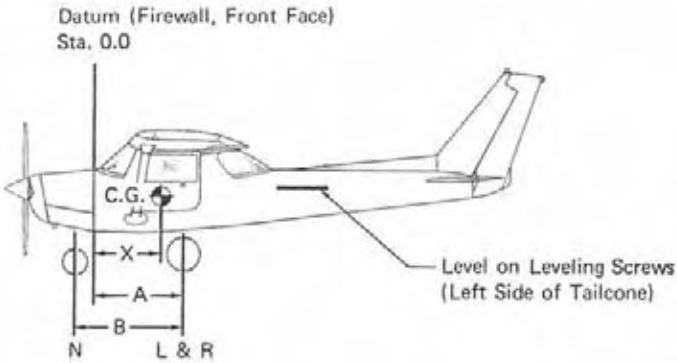

Scale Position	Scale Reading	Tare	Symbol	Net Weight
Left Wheel			L	
Right Wheel			R	
Nose Wheel			N	
Sum of Net Weights (As Weighed)			W	

$$X = ARM = \frac{(A) - (N) \times (B)}{W} ; X = \frac{(\quad) - (\quad) \times (\quad)}{(\quad)} = (\quad) \text{ IN.}$$

Item	Weight (Lbs.)	X C.G. Arm (In.) =	Moment/1000 (Lbs.-In.)
Airplane Weight (From Item 5, page 6-3)			
Add Oil: No Oil Filter (6 Qts at 7.5 Lbs/Gal)		-14.7	
With Oil Filter (7 Qts at 7.5 Lbs/Gal)		-14.7	
Add Unusable Fuel: Std. Tanks (1.5 Gal at 6 Lbs/Gal)		40.0	
L.R. Tanks (1.5 Gal at 6 Lbs/Gal)		40.0	
Equipment Changes			
Airplane Basic Empty Weight			

Figure 6-1. Sample Airplane Weighing

For Flight Training Reference Only

SAMPLE WEIGHT AND BALANCE RECORD

(Continuous History of Changes in Structure or Equipment Affecting Weight and Balance)

AIRPLANE MODEL	SERIAL NUMBER	PAGE NUMBER

DATE	ITEM NO.		DESCRIPTION OF ARTICLE OR MODIFICATION	WEIGHT CHANGE						RUNNING BASIC EMPTY WEIGHT	
				ADDED (+)			REMOVED (-)				
	In	Out		Wt. (lb.)	Arm (In.)	Moment /1000	Wt. (lb.)	Arm (In.)	Moment /1000	Wt. (lb.)	Moment /1000

Figure 6-2. Sample Weight and Balance Record

For Flight Training Reference Only

WEIGHT AND BALANCE

The following information will enable you to operate your Cessna within the prescribed weight and center of gravity limitations. To figure weight and balance, use the Sample Problem, Loading Graph, and Center of Gravity Moment Envelope as follows:

Take the basic empty weight and moment from appropriate weight and balance records carried in your airplane, and enter them in the column titled YOUR AIRPLANE on the Sample Loading Problem.

NOTE

> In addition to the basic empty weight and moment noted on these records, the C.G. arm (fuselage station) is also shown, but need not be used on the Sample Loading Problem. The moment which is shown must be divided by 1000 and this value used as the moment/1000 on the loading problem.

Use the Loading Graph to determine the moment/1000 for each additional item to be carried; then list these on the loading problem.

NOTE

> Loading Graph information for the pilot, passengers and baggage is based on seats positioned for average occupants and baggage loaded in the center of the baggage areas as shown on the Loading Arrangements diagram. For loadings which may differ from these, the Sample Loading Problem lists fuselage stations for these items to indicate their forward and aft C.G. range limitation (seat travel and baggage area limitation). Additional moment calculations, based on the actual weight and C.G. arm (fuselage station) of the item being loaded, must be made if the position of the load is different from that shown on the Loading Graph.

Total the weights and moments/1000 and plot these values on the Center of Gravity Moment Envelope to determine whether the point falls within the envelope, and if the loading is acceptable.

For Flight Training Reference Only

LOADING ARRANGEMENTS

*Pilot or passenger center of gravity on adjustable seats positioned for average occupant. Numbers in parenthesis indicate forward and aft limits of occupant center of gravity range.

**Arms measured to the center of the areas shown.

NOTES:
1. The usable fuel C.G. arm for standard tanks is located at station 42.0; the C.G. arm for usable fuel in long range tanks is station 39.5.
2. The aft baggage wall (approximate station 94) can be used as a convenient interior reference point for determining the location of baggage area fuselage stations.

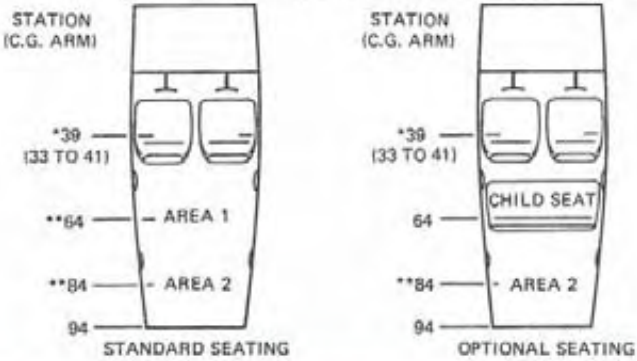

Figure 6-3. Loading Arrangements

BAGGAGE LOADING AND TIE-DOWN

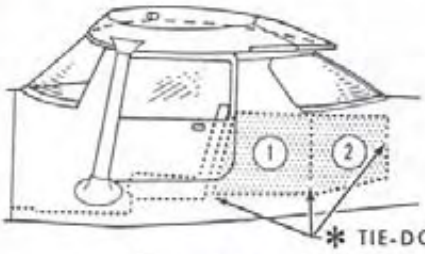

BAGGAGE AREA
MAXIMUM ALLOWABLE LOADS

AREA 1 = 120 POUNDS
AREA 2 = 40 POUNDS
AREAS 1 + 2 = 120 POUNDS

* A cargo tie-down net is provided to secure baggage in the baggage area. The net attaches to six tie-down rings. Two rings are located on the floor just aft of the seat backs and one ring is located two inches above the floor on each cabin wall at the aft end of area 1. Two additional rings are located at the top, aft end of area 2. At least four rings should be used to restrain the maximum baggage load of 120#.

Figure 6-4. Baggage Loading and Tie-Down

For Flight Training Reference Only

CABIN HEIGHT MEASUREMENTS

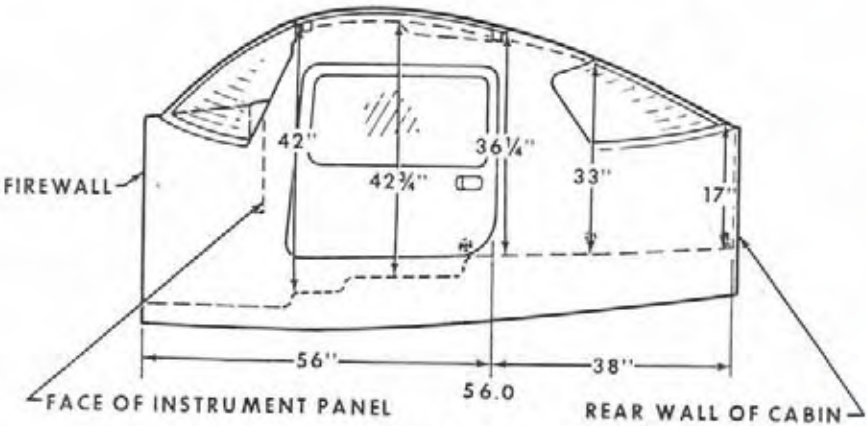

DOOR OPENING DIMENSIONS

WIDTH (TOP)	WIDTH (BOTTOM)	HEIGHT (FRONT)	HEIGHT (REAR)
31"	33¼"	31½"	31"

WIDTH
• LWR WINDOW LINE
* CABIN FLOOR

CABIN WIDTH MEASUREMENTS

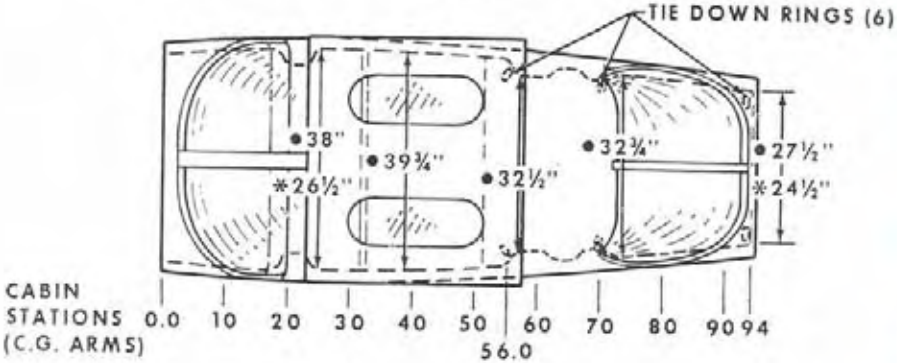

Figure 6-5. Internal Cabin Dimensions

For Flight Training Reference Only

SAMPLE LOADING PROBLEM	SAMPLE AIRPLANE		YOUR AIRPLANE	
	Weight (lbs.)	Moment (lb. -ins. /1000)	Weight (lbs.)	Moment (lb. - ins. /1000)
1. Basic Empty Weight (Use the data pertaining to your airplane as it is presently equipped. Includes unusable fuel and full oil)	1136	34.0		
2. Usable Fuel (At 6 Lbs./Gal.)				
Standard Tanks (24.5 Gal. Maximum)	147	6.2		
Long Range Tanks (37.5 Gal. Maximum)				
Reduced Fuel (As limited by maximum weight)				
3. Pilot and Passenger (Station 33 to 41)	340	13.3		
4. *Baggage - Area 1 (Or passenger on child's seat) (Station 50 to 76, 120 Lbs. Max.)	52	3.3		
5. *Baggage - Area 2 (Station 76 to 94, 40 Lbs. Max.)				
6. RAMP WEIGHT AND MOMENT	1675	56.8		
7. Fuel allowance for engine start, taxi, and runup	-5	-.2		
8. TAKEOFF WEIGHT AND MOMENT (Subtract Step 7 from Step 6)	1670	56.6		
9. Locate this point (1670 at 56.6) on the Center of Gravity Moment Envelope, and since this point falls within the envelope, the loading is acceptable.				

* The maximum allowable combined weight capacity for baggage areas 1 and 2 is 120 pounds.

Figure 6-6. Sample Loading Problem

For Flight Training Reference Only

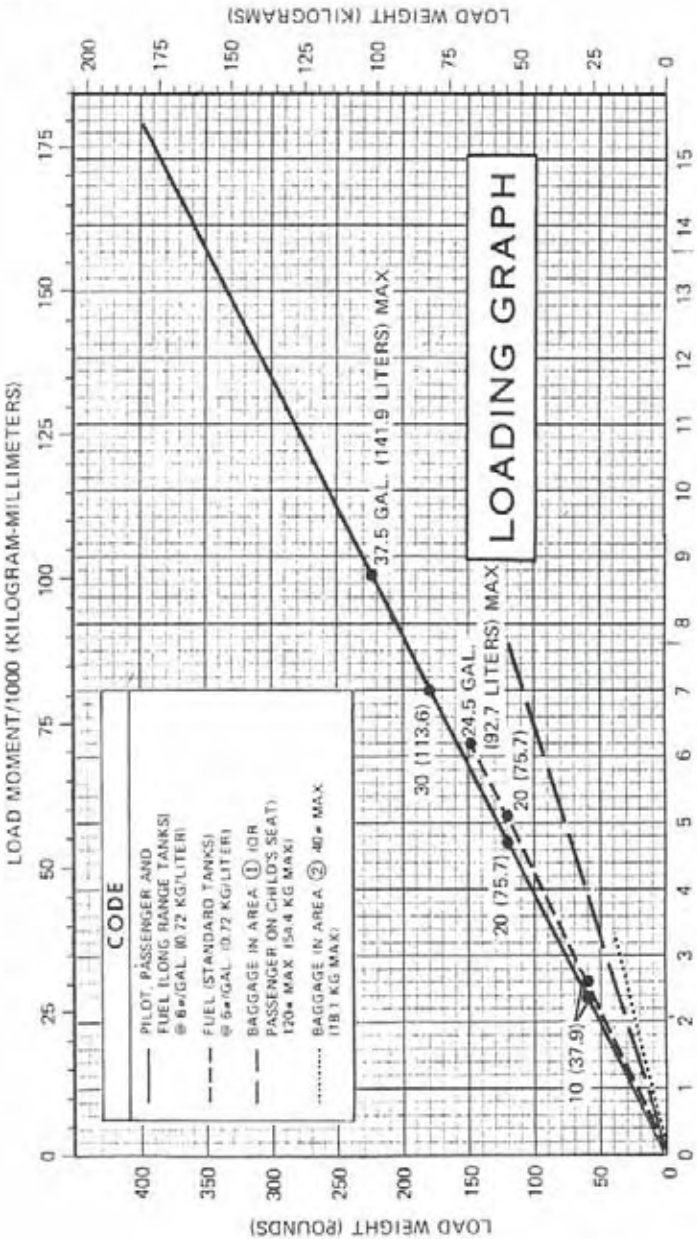

NOTES: Line representing adjustable seats shows the pilot or passenger center of gravity on adjustable seats positioned for an average occupant. Refer to the Loading Arrangements Diagram for forward and aft limits of occupant C.G. range.

Figure 6-7. Loading Graph

For Flight Training Reference Only

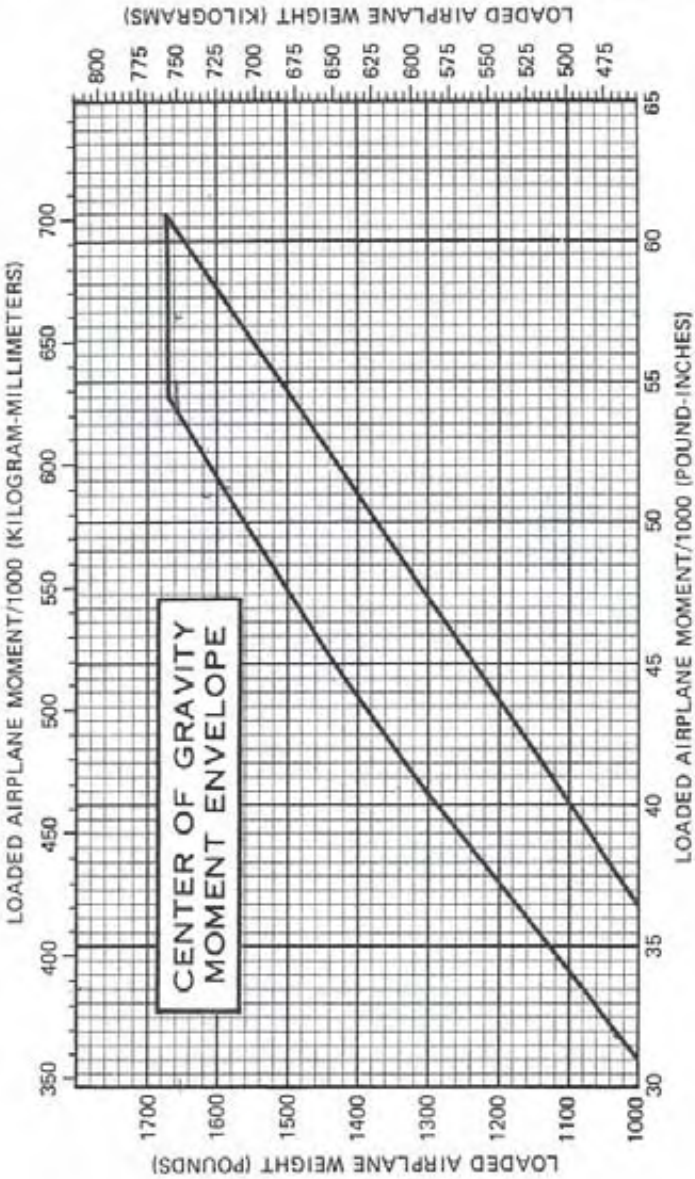

Figure 6-8. Center of Gravity Moment Envelope

For Flight Training Reference Only

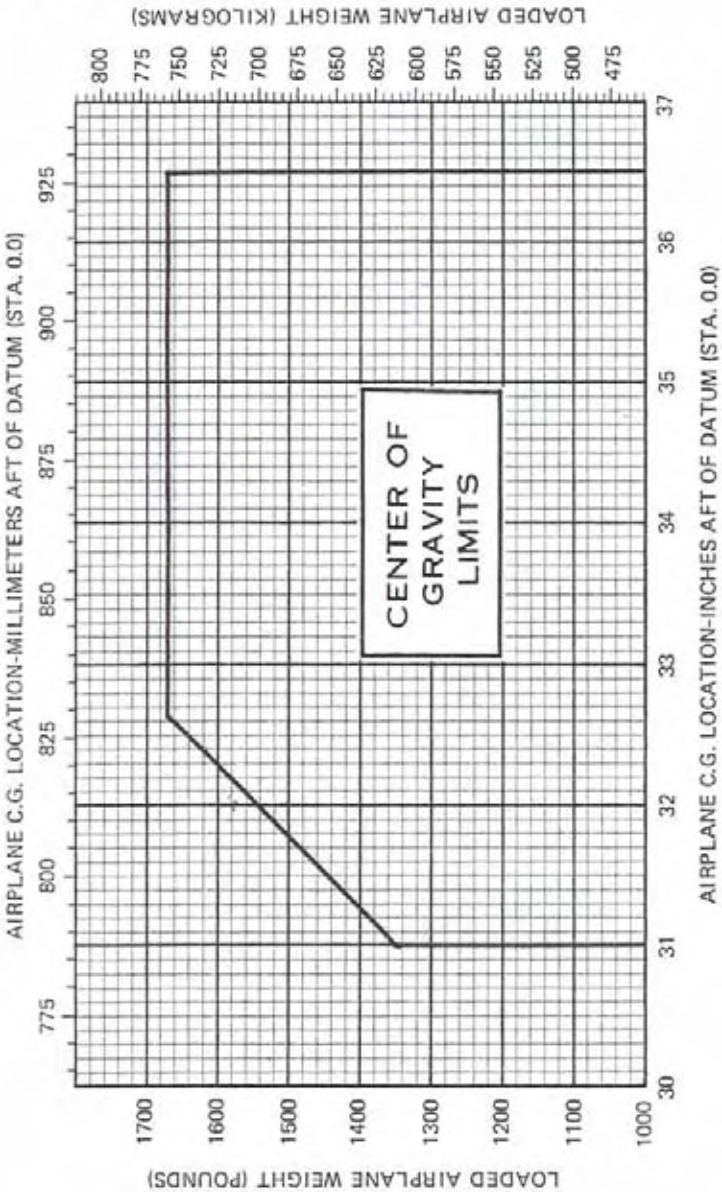

Figure 6-9. Center of Gravity Limits

For Flight Training Reference Only

EQUIPMENT LIST

The following equipment list is a comprehensive list of all Cessna equipment available for this airplane. A separate equipment list of items installed in your specific airplane is provided in your aircraft file. The following list and the specific list for your airplane have a similar order of listing.

This equipment list provides the following information:

An **item number** gives the identification number for the item. Each number is prefixed with a letter which identifies the **descriptive** grouping (example: A. Powerplant & Accessories) under which it is listed. Suffix letters identify the equipment as a required item, a standard item or an optional item. Suffix letters are as follows:

- -R = required items of equipment for FAA certification
- -S = standard equipment items
- -O = optional equipment items replacing required or standard items
- -A = optional equipment items which are in addition to required or standard items

A **reference drawing** column provides the drawing number for the item.

NOTE

If additional equipment is to be installed, it must be done in accordance with the reference drawing, accessory kit instructions, or a separate FAA approval.

Columns showing **weight (in pounds)** and **arm (in inches)** provide the weight and center of gravity location for the equipment.

NOTE

Unless otherwise indicated, true values (not net change values) for the weight and arm are shown. Positive arms are distances aft of the airplane datum; negative arms are distances forward of the datum.

NOTE

Asterisks (*) after the item weight and arm indicate complete assembly installations. Some major components of the assembly are listed on the lines immediately following. The summation of these major components does not necessarily equal the complete assembly installation.

For Flight Training Reference Only

ITEM NO	EQUIPMENT LIST DESCRIPTION	REF DRAWING	WT LBS	ARM INS
	A. POWERPLANT & ACCESSORIES			
A01-R	ENGINE, LYCOMING O-235-L2C (INCLUDES STARTER, CARBURETOR, SPARK PLUGS AND ALTERNATOR BRACKETS)	0450071	243.5	-19.2
A05-R	FILTER, CARBURETOR AIR	0294510-0201	0.5	-16.0
A09-R	ALTERNATOR, 60 AMP, 28 VOLT (BELT DRIVE)	0611503-0102	10.7	-27.5
A17-R	OIL COOLER INSTALLATION	0450071	3.5	-24.0*
	OIL COOLER (STEWART WARNER)	8406J OR 8406M	1.9	-27.4
A21-A	OIL FILTER INSTALLATION (SPIN-ON ELEMENT)	0450412	2.5	-6.0
	WT NET CHANGE			
A33-R	PROPELLER INSTALLATION	0450077	28.2*	-36.5*
	PROPELLER, MCCAULEY FIXED PITCH 1A103/TCM6958	0161001-0501	26.6	-36.5
A41-R	SPINNER INSTALLATION, PROPELLER	0450077	2.4*	-38.6*
	SPINNER DOME	0450073-1	0.8	-38.4
	AFT BULKHEAD (BACK SIDE OF PROP)	0450072-1	1.1	-38.3
	FWD BULKHEAD (FWD SIDE OF PROP)	0450076-1	0.3	-37.4
A61-A	VACUUM SYSTEM, ENGINE DRIVEN	0413466	2.8*	-5.2
	VACUUM PUMP OR	0431003-0101	1.8	-7.5
	VACUUM PUMP	0431003-0104	1.8	-7.5
	VACUUM RELIEF VALVE	0482001-0401	0.5	1.5
A70-S	ENGINE PRIMING SYSTEM		0.5	3.1
A73-A	VALVE, ENGINE OIL QUICK DRAIN (NET CHANGE)	1701015	0.0	- -
	B. LANDING GEAR & ACCESSORIES			
B01-R-1	WHEEL, BRAKE & TIRE ASSY, 6.00X6 MAIN (2)	0163019-0201	40.3*	46.8*
	WHEEL ASSEMBLY, MCCAULEY (EACH)	0163006-0101	7.4	47.1
	BRAKE ASSEMBLY, MCCAULEY (LEFT)	0163032-0111	1.7	43.7
	BRAKE ASSEMBLY, MCCAULEY (RIGHT)	0163032-0112	1.7	43.7
	TIRE, 4-PLY BLACKWALL (EACH)	0262003-0101	8.5	47.1
	TUBE (EACH)	0262023-0102	1.8	47.1
B01-R-2	WHEEL, BRAKE & TIRE ASSY, 6.00X6 MAIN (2)	1241156-40	37.6*	46.8*
	WHEEL ASSY, CLEVELAND 40-113 (EACH)	0163001-0101	6.2	47.1
	BRAKE ASSY, CLEVELAND 30-75A (LEFT)	0163033-0111	1.9	43.7
	BRAKE ASSY, CLEVELAND 30-75A (RIGHT)	0163033-0112	1.9	43.7
	TIRE, 4-PLY BLACKWALL (EACH)	0262003-0101	8.5	47.1
	TUBE (EACH)	0262023-0102	1.8	47.1

For Flight Training Reference Only

ITEM NO	EQUIPMENT LIST DESCRIPTION	REF DRAWING	WT LBS	ARM INS
B04-R-1	WHEEL & TIRE ASSY, 5.00X5 NOSE	C163018-0101	8.7*	-10.8*
	WHEEL ASSY, MCCAULEY	C163005-0201	3.4	-10.8
	TIRE, 4 PLY BLACKWALL	C262003-0102	4.0	-10.8
	TUBE	C262023-0101	1.2	-10.8
B04-R-2	WHEEL & TIRE ASSY, 5.00X5 NOSE	1241156-2	8.7*	-10.8*
	WHEEL ASSY, CLEVELAND 40-77	1241156-12	3.0	-10.8
	TIRE, 4-PLY BLACKWALL	C262003-0102	4.0	-10.8
	TUBE	C262023-0101	1.2	-10.8
B10-A	WHEEL FAIRINGS (SET OF 3)	0541225	18.0*	35.3*
	NOSE WHEEL FAIRING	0543079	4.1	-9.5
	MAIN WHEEL FAIRING (EACH)	0541223	5.9	49.5
	BRAKE FAIRINGS (EACH)	0441227	0.6	50.5
	C. ELECTRICAL SYSTEMS			
C01-R	BATTERY, 24 VOLT STANDARD DUTY	C614002-0101	23.2	-5.5
C01-O	BATTERY, 24 VOLT HEAVY DUTY	C614002-0102	25.2	-5.5
C04-R	ALTERNATOR CONTROL UNIT WITH HIGH VOLTAGE PROTECTION AND LOW VOLTAGE SENSING	C611005-0101 OR C611005-0102	0.4	0.5
C07-A	GROUND SERVICE RECEPTACLE	0401026	2.1	-1.9
C16-A	PITOT HEATER	0422355	0.5	21.5
C22-A	POST LIGHTS (INSTRUMENT PANEL LIGHTING)	0413577	0.5	18.0
C25-A	MIC SWITCH & MAP LIGHT CONTROL WHEEL MTD	0470117-1	0.2	22.5
C28-A	MAP LIGHT, DOOR POST MOUNTED	0470425	0.3	23.0
C43-A	LIGHT INSTALLATION, OMNIFLASH BEACON	0406003-1	1.3*	193.7*
	BEACON LIGHT IN FIN TIP	C621001-0102	0.4	217.2
	FLASHER POWER SUPPLY IN AFT TAILCONE	C594502-0102	0.5	173.9
	RESISTOR (MEMCOR)	DR95-6	0.2	183.4
C46-A	LIGHT INSTALLATION WING TIP STROBE	0401009-1	3.1*	37.8*
	STROBE LIGHTS IN WING TIP (SET OF 2)	C622006-0107	0.2	35.5
	FLASHER POWER SUPPLIES IN TIPS (SET OF 2)	C622008-0102	2.3	39.5
C49-A-1	LANDING LIGHT INSTALLATION--SINGLE BULB	0401022	1.0	-28.3
C49-A-2	LANDING & TAXI LIGHT INSTL. DUAL BULB	0401022	1.8	-28.3
	D. INSTRUMENTS			
D01-R	INDICATOR, AIRSPEED	C661064-0107	0.6	17.2

For Flight Training Reference Only

ITEM NO	EQUIPMENT LIST DESCRIPTION	REF DRAWING	WT LBS	ARM INS
001-D	INDICATOR, TRUE AIRSPEED (0513279)	C661065-0105	0.7	17.3
007-R	ALTIMETER, SENSITIVE	C661071-0101	0.7	17.6
007-D-1	ALTIMETER, SENSITIVE (20 FT MARKINGS) (FEET AND MILLIBARS)	C661025-0102	0.7	17.6
007-D-2	ALTIMETER, SENSITIVE (50 FT. MARKINGS) (FEET AND MILLIBARS)	C661071-0102	0.7	17.6
016-A-1	ENCODING ALTIMETER (INCLUDES RELOCATION OF CONVENTIONAL ALTIMETER)	0401013	2.9	17.0
016-A-2	ENCODING ALTIMETER, FEET & MILLIBARS (INCLUDES RELOCATION OF CONVENTIONAL ALTIMETER)	0401013	2.9	17.0
016-A-3	ALTITUDE ENCODER (BLIND, DOES NOT REQUIRE PANEL MOUNTING)	0401019	1.5	2.0
019-R	AMMETER	S-1320-5	0.5	18.0
025-A-1	CLOCK INSTALLATION	0400341	0.4*	14.4*
	CLOCK, ELECTRIC	C664508-0102	0.3	18.1
025-A-2	CLOCK INSTALLATION, DIGITAL READOUT	0470426-1	0.4*	14.4*
	CLOCK-TIMER, DIGITAL	C664511-0101	0.3	18.1
028-R	COMPASS	C660501-0102	0.5	20.0
037-R	INSTRUMENT CLUSTER (LH FUEL & RH FUEL)	C669537-0104	0.4	18.0
037-D	INSTRUMENT CLUSTER (LH & RH FUEL) (USED WITH G92-D, LONG RANGE WINGS ONLY)	C669537-0105	0.4	18.0
040-R	INSTRUMENT CLUSTER (OIL PRES. & OIL TEMP.)	C669535-0101	0.4	18.0
049-A	ECONOMY MIXTURE INDICATOR (EGT)	0401028-1	0.7	9.0
059-A	INDICATOR, 'G' METER	0400335	0.7	17.4
064-A	GYRO INSTALLATION (REQUIRES ITEM A61-A)	0413466-1	6.3*	13.0*
	DIRECTIONAL INDICATOR	C661075	2.5	14.7
	ATTITUDE INDICATOR	C661076	2.2	15.3
067-A	RECORDER, ENGINE HOUR METER	0401017	0.6	5.2
082-A	OUTSIDE AIR TEMPERATURE INDICATOR	C668507-	0.1	22.0
085-R	TACHOMETER INSTALLATION, ENGINE	0400500	1.0*	12.5*
	RECORDING TACH INDICATOR	C668020-0120	0.6	17.0
088-A-1	INDICATOR, TURN COORDINATOR (24 VOLT ONLY)	C661003-0505	1.3	17.2
088-A-2	INDICATOR, TURN COORDINATOR (10-30 VOLT)	C661003-0506	1.3	17.2
091-A	INDICATOR, VERTICAL SPEED	C661080-0101	1.0	18.0
	E. CABIN ACCOMMODATIONS			
E05-R	SEAT, PILOT INDIVIDUAL SLIDING	0414084	11.1	45.2
E05-D	SEAT, VERTICALLY ADJUSTABLE, PILOT	0414085	17.0	45.2

For Flight Training Reference Only

ITEM NO	EQUIPMENT LIST DESCRIPTION	REF DRAWING	WT LBS	ARM INS
E07-S	SEAT, CO-PILOT INDIVIDUAL SLIDING	0414084	11.1	45.2
E07-D	SEAT, VERTICALLY ADJUSTABLE, CO-PILOT	0414085	17.0	45.2
E09-A	SEAT INSTALLATION, AUXILIARY	0400134-1	10.5*	66.5*
	UPPER BACK REST CUSHION	0711080-1	1.3	72.9
	LOWER SEAT CUSHION ASSEMBLY	0400136-9	6.4	64.5
	LAP BELT ASSEMBLY	S-1746-2	1.0	66.0
E15-R	BELT ASSY, PILOT LAP	S-2275-104	1.0	39.0
E15-S	SHOULDER HARNESS ASSY, PILOT	S-2275-202	1.0	39.0
E19-D	SHOULDER HARNESS INERTIA INSTL., PILOT & CO-PILOT (NET CHANGE)	0401012-1	1.3	71.1
E23-S	BELT & SHOULDER HARNESS ASSY, CO-PILOT	S-2275-4	2.0	39.0
E34-D	INTERIOR, DELUXE (NET CHANGE)	0415020	1.5	40.0
E39-A	WINDOWS, OVERHEAD CABIN TOP (NET INCREASE)	0413492	0.5	49.0
E55-A	SUN VISORS (SET OF 2)	0514166	1.0	27.0
E57-D	WINDOWS, TINTED, CABIN (NET CHANGE)	0400324-1	0.0	- -
E65-S	BAGGAGE NET	2015009-2	0.5	84.0
E85-A	DUAL CONTROLS (WHEEL, PEDALS & TOE BRAKES)	0460118-2	4.1	12.1
E89-D	ALL PURPOSE CONTROL WHEEL (ROD WITH C25-A) (WT-NET CHANGE)		NEGL	- -
E93-R	HEATING SYSTEM, CABIN (INCLUDES ENGINE EXHAUST SYSTEM)	0450071	14.0	-22.0
	F. PLACARDS, WARNINGS & MANUALS			
F01-R	OPERATIONAL LIMITATIONS PLACARD VFR-DAY	0405068-1	NEGL	23.0
F01-D-1	OPERATIONAL LIMITATIONS PLACARD VFR-DAY NIGHT	0405068-2	NEGL	23.0
F01-D-2	OPERATIONAL LIMITATIONS PLACARD IFR-DAY NIGHT	0405068-3	NEGL	23.0
F04-R	STALL WARNING HORN, PNEUMATIC, AUDIBLE	0413029	0.5	21.5
F16-R	PILOT'S OPERATING HANDBOOK AND FAA APPROVED AIRPLANE FLIGHT MANUAL	D1170-13PH	0.5	- -
	G. AUXILIARY EQUIPMENT			
G07-A	HOISTING RINGS, AIRCRAFT CABIN TOP (NOT FACTORY INSTALLED)	0541115	2.0	42.0
G13-A	CORROSION PROOFING, INTERNAL	0400027-2	4.5	68.0

For Flight Training Reference Only

ITEM NO	EQUIPMENT LIST DESCRIPTION	REF DRAWING	WT LBS	ARM INS
G16-A	STATIC DISCHARGERS (SET OF 10)	0401015	0.4	117.6
G19-A	STABILIZER ABRASION BOOTS	0500041	2.5	179.4
G22-A	TOW BAR, AIRCRAFT NOSE WHEEL (STOWED)	0501019-1	1.6	84.0
G25-S	PAINT, OVERALL EXTERIOR	0404034	9.4*	80.3*
	OVERALL BASE WHITE		8.7	79.0
	COLOR STRIPE		0.3	115.1
G31-A	CABLES, CORROSION RESISTANT CONTROL (NET CHANGE)	0400027	0.0	- -
G34-A	LIGHTER, CIGARETTE	0401023	0.1	18.0
G49-D	WING TIPS, MODIFIED CONICAL (NET CHANGE)	0523565	2.5	41.0
G55-A	FIRE EXTINGUISHER, HAND TYPE	0401001	3.0	9.5
G58-A	STEPS & HANDLES, REFUELING ASSIST	0413456	2.1	9.9
G67-A	PEDAL EXTENSIONS, RUDDER, REMOVABLE - SET OF 2 (STOWABLE - INSTALLED ARM SHOWN) AVAILABLE FROM DEALERS ONLY	0701048	2.3	8.0
G88-A	WINTERIZATION KIT INSTALLATION, ENGINE	0401024	0.5*	-20.9*
	COVER PLATES, FWD COWL (SET OF 2 INSTALLED)	- -	0.1	-33.0
	COVER PLATES, FORWARD COWL (STOWED)	- -	0.1	84.0
	CRANKCASE BREATHER TUBE INSULATION	- -	0.2	-12.0
G92-A	WINGS WITH 39 GALLON CAPACITY, EXTENDED RANGE FUEL TANKS, (NET CHANGE)	0401018	5.9	37.3
	H. AVIONICS & AUTOPILOTS			
H01-A	CESSNA 300 ADF	3910159-11	8.2*	17.4*
	RECEIVER WITH BFO (R-546E)	41240-0001	3.3	13.5
	INDICATOR (IN-346A)	40980-1001	0.9	15.5
	ANTENNA INSTALLATION	0470400-621	0.2	96.5
	LOOP ANTENNA INSTALLATION	- -	1.4	24.2
	CABLE INSTALLATION	3950104-14	1.8	12.3
	MISC. INSTALLATION COMPONENTS		0.6	14.4
H07-A	CESSNA 400 GLIDESLOPE WITH ILS INDICATOR EXCHANGED FOR LOC INDICATOR	3910157-10	4.1*	78.9*
	RECEIVER (R-443B)	42100-0000	2.1	105.3
	MOUNTING, RIGID	36450-0000	0.3	105.3
	ANTENNA	1200098-2	0.2	22.0
H08-A-1	AUTO RADIAL CENTERING INDICATOR ARC/LOC EXCHANGE FOR VOR/LOCIN ITEMS H22-A AND H25-A	46860-1200	0.2	15.5

For Flight Training Reference Only

ITEM NO	EQUIPMENT LIST DESCRIPTION	REF DRAWING	WT LBS	ARM INS
H08-A-2	AUTO RADIAL CENTERING INDICATOR, ARC/ILS EXCHANGE FOR VOR/ILS INDICATOR IN ITEM H37-A ONLY	46860-2200	0.2	15.5
H13-A	CESSNA 400 MARKER BEACON	- -	2.2*	35.4*
	RECEIVER (R-402A)	42410-5128	0.8	11.7
	ANTENNA, L SHAPED ROD	0770681-1	0.6	86.0
H16-A-1	CESSNA 300 TRANSPONDER	3910127-1	3.6*	18.6*
	TRANSCEIVER (RT-359A)	41420-0028	2.7	13.0
	ANTENNA	42940-0000	0.1	67.0
H16-A-2	CESSNA 400 TRANSPONDER (EXPORT USE)	3910128-20	3.6*	18.6*
	TRANSCEIVER (RT-459A)	41470-1028	2.8	13.0
	ANTENNA	42940-0000	0.1	67.0
H22-A	CESSNA 300 NAV/COM, 720 CH COM 1ST UNIT (REQUIRES H34-A TO BE OPERATIONAL)	3910183	8.1*	13.9*
	RECEIVER-TRANSCEIVER (RT-385A)	46660-1000	5.5	13.6
	VOR/LOC INDICATOR (IN-385A)	46860-1000	1.6	15.5
	MOUNT, WIRING & MISC ITEMS		1.0	12.9
H25-A	CESSNA 300 NAV/COM, 720 CH COM 2ND UNIT (REQUIRES H37-A TO BE OPERATIONAL)	3910183	8.1*	13.9*
	RECEIVER-TRANSCEIVER (RT-385A)	46660-1000	5.5	13.6
	VOR/LOC INDICATOR (IN-385A)	46860-1000	1.6	15.5
	MOUNT, WIRING & MISC ITEMS		1.0	12.9
H28-A-1	EMERGENCY LOCATOR TRANSMITTER	0470419-1	3.5*	102.5*
	TRANSMITTER (D & M DMELT-6-1)	C589511-0117	3.3	102.6
	ANTENNA	C589511-0109	0.1	101.3
H28-A-2	EMERGENCY LOCATOR TRANSMITTER (USED IN CANADA)	0470419-2	3.5*	102.5*
	TRANSMITTER (D & M DMELT-6-1C)	C589511-0113	3.3	102.6
	ANTENNA	C589511-0109	0.1	101.3
H34-A	BASIC AVIONICS KIT (USED WITH 1ST UNIT NAV/COM FACTORY INSTALLATION)	3910186	5.3*	60.2*
	RADIO COOLING	3930208	1.0	15.6
	NOISE FILTER (AUDIO)(ON ALTERNATOR)	3940148-1	0.1	-25.0
	LH COM ANTENNA CABLE	3950104-3	0.4	20.2
	OMNI ANTENNA CABLE	3950104-4	0.9	105.0
	OMNI ANTENNA INSTALLATION	3960102-9	0.5	220.9
	VHF L.H. COM ANTENNA	3960113-1	0.4	55.9
	MICROPHONE INSTALLATION	3970117-1	0.3	18.2
	AUDIO CONTROL	3970145	0.4	14.0
	CABIN SPEAKER INSTL	3970123-6	1.1	51.1
	HEADPHONE INSTALLATION	3970125-1	0.2	17.2
H37-A	COM ANTENNA & OMNI COUPLER KIT (AVAILABLE		1.0*	30.6*

For Flight Training Reference Only

ITEM NO	EQUIPMENT LIST DESCRIPTION	REF DRAWING	WT LBS	ARM INS
	ON 2ND UNIT NAV/COM FACTORY INSTL ONLY)			
	RH COM ANTENNA INSTALLATION		0.4	55.9
	RH COM ANTENNA CABLE		0.4	20.2
	OMNI COUPLER (SIGNAL SPLITTER) & CABLE	S-2086-1	0.2	1.0
H55-A	HEADSET-MICROPHONE, RQS ALL*PURPOSE CONTROL WHEEL	C596531-0101	0.2	17.2
H56-A	PADDED HEADPHONE-MIKE ASSY, REQUIRES ALL-PURPOSE CONTROL WHEEL	C596531-0101	1.1	- -
	J. SPECIAL OPTION PACKAGES			
J01-A	152-II PACKAGE EQUIPMENT		32.1*	26.1*
	A61-A VACUUM SYSTEM (FOR GYROS)	0413466-2	2.8	-5.2
	C43-A OMNI FLASHING BEACON	0406003-1	1.3	193.7
	C49-A-1 LANDING LIGHT SINGLE BULB	0401022	1.0	-28.3
	D64-A GYRO INSTALLATION	0413466	6.3	13.0
	D82-A OUTSIDE AIR TEMPERATURE IND	C668507-0101	0.1	22.0
	D88-A TURN COORDINATOR	C661003-0505	1.3	17.2
	D91-A RATE OF CLIMB IND.	C661080-0101	0.7	17.3
	E55-A SUN VISORS	0514166	1.0	27.0
	E65-A DUAL CONTROLS	0460118-2	4.1	12.1
	G34-A CIGARETTE LIGHTER	0401023	0.1	18.0
	H22-A CESSNA 300 NAV/COM RT-385A	3910183	8.1	13.9
	H34-A BASIC AVIONICS KIT		5.3	60.2
J04-A	152 II NAV-PAC EQUIPMENT		12.7*	16.5*
	H16-A-1 CESSNA 300 TRANSPONDER RT-359A	3910127	3.6	18.6
	H25-A RT-385A 2ND UNIT	3910183	8.1	13.9
	H37-A COM ANTENNA & COUPLER KIT		1.0	30.6

For Flight Training Reference Only

SECTION 7
AIRPLANE & SYSTEMS DESCRIPTIONS

TABLE OF CONTENTS

	Page
Introduction	7-3
Airframe	7-3
Flight Controls	7-8
Trim System	7-8
Instrument Panel	7-8
Ground Control	7-9
Wing Flap System	7-10
Landing Gear System	7-10
Baggage Compartment	7-10
Seats	7-11
Seat Belts And Shoulder Harnesses	7-13
Seat Belts	7-13
Shoulder Harnesses	7-13
Integrated Seat Belt/Shoulder Harnesses With Inertia Reels	7-14
Entrance Doors And Cabin Windows	7-14
Control Locks	7-15
Engine	7-15
Engine Controls	7-15
Engine Instruments	7-16
New Engine Break-In And Operation	7-17
Engine Oil System	7-17
Ignition-Starter System	7-18
Air Induction System	7-18
Exhaust System	7-18
Carburetor And Priming System	7-18
Cooling System	7-19
Propeller	7-19
Fuel System	7-19
Brake System	7-22
Electrical System	7-22
Master Switch	7-22
Ammeter	7-24

For Flight Training Reference Only

TABLE OF CONTENTS (Continued)

Page

Alternator Control Unit And Low-Voltage Warning Light . . 7-24
Circuit Breakers And Fuses 7-25
Ground Service Plug Receptacle 7-25
Lighting Systems 7-25
Exterior Lighting 7-25
Interior Lighting 7-26
Cabin Heating, Ventilating And Defrosting System 7-27
Pitot-Static System And Instruments 7-27
Airspeed Indicator 7-29
Vertical Speed Indicator 7-29
Altimeter 7-29
Vacuum System And Instruments 7-29
Attitude Indicator 7-31
Directional Indicator 7-31
Suction Gage 7-31
Stall Warning System 7-31
Avionics Support Equipment 7-32
Audio Control Panel 7-32
Transmitter Selector Switch 7-32
Audio Selector Switches 7-34
Com Auto Audio Selector Switch 7-34
Com Both Audio Selector Switch 7-35
Annunciator Lights Brightness And Test Switch 7-35
Sidetone Operation 7-35
Microphone-Headset Installations 7-36
Static Dischargers 7-36

For Flight Training Reference Only

INTRODUCTION

This section provides description and operation of the airplane and its systems. Some equipment described herein is optional and may not be installed in the airplane. Refer to Section 9, Supplements, for details of other optional systems and equipment.

AIRFRAME

The airplane is an all-metal, two-place, high-wing, single-engine airplane equipped with tricycle landing gear and designed for general utility purposes.

The construction of the fuselage is a conventional formed sheet metal bulkhead, stringer, and skin design referred to as semimonocoque. Major items of structure are the front and rear carry-through spars to which the wings are attached, a bulkhead and forgings for main landing gear attachment at the base of the rear door posts, and a bulkhead with attaching plates at the base of the forward door posts for the lower attachment of the wing struts. Four engine mount stringers are also attached to the forward door posts and extend forward to the firewall.

The externally braced wings, containing the fuel tanks, are constructed of a front and rear spar with formed sheet metal ribs, doublers, and stringers. The entire structure is covered with aluminum skin. The front spars are equipped with wing-to-fuselage and wing-to-strut attach fittings. The aft spars are equipped with wing-to-fuselage attach fittings, and are partial-span spars. Conventional hinged ailerons and single-slotted flaps are attached to the trailing edge of the wings. The ailerons are constructed of a forward spar containing balance weights, formed sheet metal ribs and "V" type corrugated aluminum skin joined together at the trailing edge. The flaps are constructed basically the same as the ailerons, with the exception of the balance weights and the addition of a formed sheet metal leading edge section.

The empennage (tail assembly) consists of a conventional vertical stabilizer, rudder, horizontal stabilizer, and elevator. The vertical stabilizer consists of a spar, formed sheet metal ribs and reinforcements, a wrap-around skin panel, formed leading edge skin and a dorsal. The rudder is constructed of a formed leading edge skin containing hinge halves, a wrap-around skin panel and ribs, and a formed trailing edge skin with a ground adjustable trim tab at its base. The top of the rudder incorporates a leading edge extension which contains a balance weight. The horizontal stabilizer is constructed of a forward spar, main spar, formed sheet metal ribs and stiffeners, a wrap-around skin panel, and formed leading edge skins. The

For Flight Training Reference Only

AILERON CONTROL SYSTEM

RUDDER CONTROL SYSTEM

Figure 7-1. Flight Control and Trim Systems (Sheet 1 of 2)

For Flight Training Reference Only

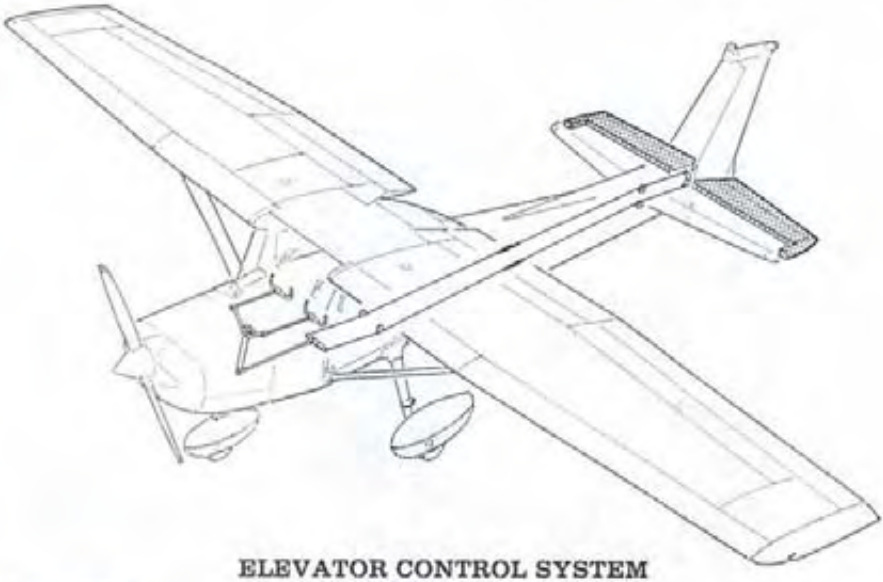

ELEVATOR CONTROL SYSTEM

ELEVATOR TRIM CONTROL SYSTEM

Figure 7-1. Flight Control and Trim Systems (Sheet 2 of 2)

For Flight Training Reference Only

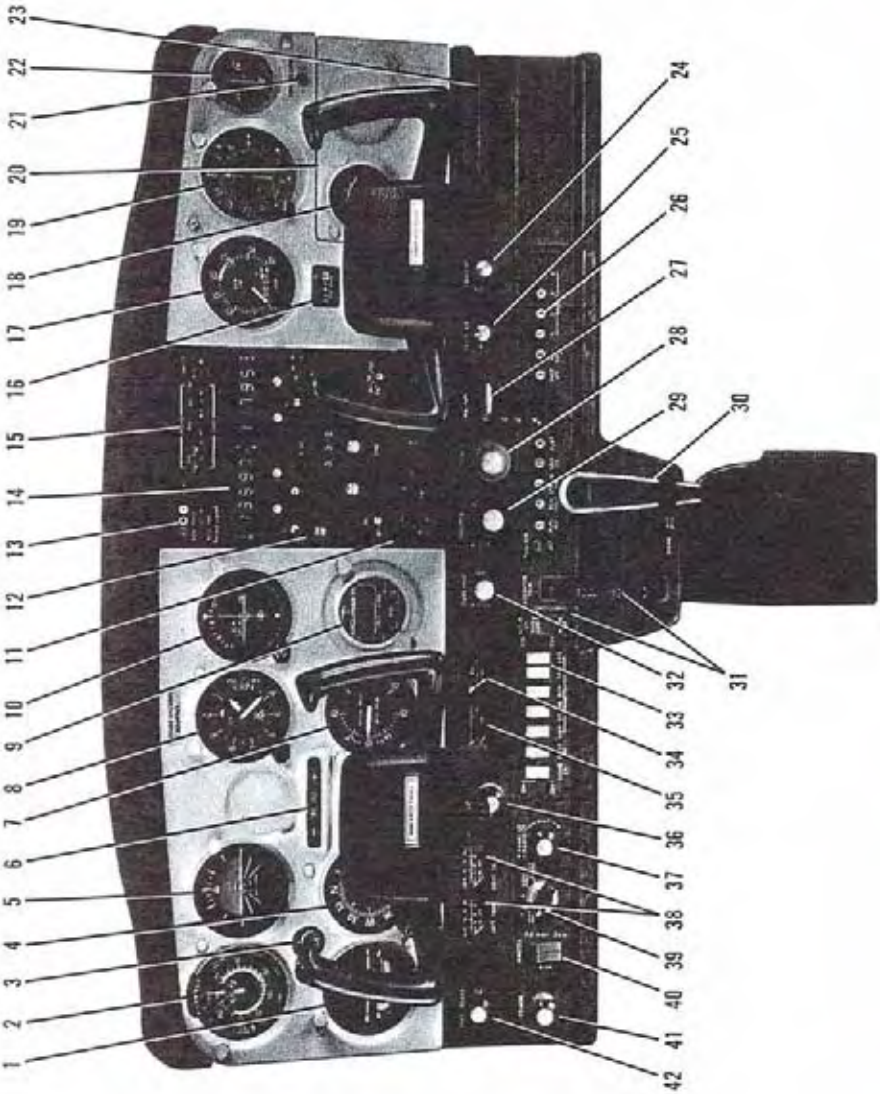

Figure 7-2. Instrument Panel (Sheet 1 of 2)

For Flight Training Reference Only

1. Turn Coordinator
2. Airspeed Indicator
3. Suction Gage
4. Directional Indicator
5. Attitude Indicator
6. Airplane Registration Number
7. Vertical Speed Indicator
8. Altimeter
9. Digital Clock
10. Course Deviation and ILS Glide Slope Indicator
11. Transponder
12. ADF Radio
13. Marker Beacon Indicator Lights and Switches
14. Nav/Com Radio
15. Audio Control Panel
16. Flight Hour Recorder
17. Tachometer
18. Economy Mixture Indicator (EGT)
19. ADF Bearing Indicator
20. Additional Instrument Space
21. Low-Voltage Warning Light
22. Ammeter
23. Map Compartment
24. Cabin Heat Control
25. Cabin Air Control
26. Circuit Breakers
27. Wing Flap Switch and Position Indicator
28. Mixture Control
29. Throttle (With Friction Lock)
30. Microphone
31. Elevator Trim Control Wheel and Position Indicator
32. Carburetor Heat Control
33. Electrical Switches
34. Oil Pressure Gage
35. Oil Temperature Gage
36. Cigar Lighter
37. Instrument Panel and Radio Dial Lights Rheostat
38. Left and Right Fuel Quantity Indicators
39. Ignition Switch
40. Master Switch
41. Primer
42. Parking Brake Control

Figure 7-2. Instrument Panel (Sheet 2 of 2)

For Flight Training Reference Only

horizontal stabilizer also contains the elevator trim tab actuator. Construction of the elevator consists of a main spar and bellcrank, left and right wrap-around skin panels, and a formed trailing edge skin on the left half of the elevator; the entire trailing edge of the right half is hinged and forms the elevator trim tab. The leading edge of both left and right elevator tips incorporate extensions which contain balance weights.

FLIGHT CONTROLS

The airplane's flight control system (see figure 7-1) consists of conventional aileron, rudder, and elevator control surfaces. The control surfaces are manually operated through mechanical linkage using a control wheel for the ailerons and elevator, and rudder/brake pedals for the rudder.

Extensions are available for the rudder/brake pedals. They consist of a rudder pedal face, two spacers and two spring clips. To install an extension, place the clip on the bottom of the extension under the bottom of the rudder pedal and snap the top clip over the top of the rudder pedal. Check that the extension is firmly in place. To remove the extensions, reverse the above procedures.

TRIM SYSTEM

A manually-operated elevator trim tab is provided. Elevator trimming is accomplished through the elevator trim tab by utilizing the vertically mounted trim control wheel. Forward rotation of the trim wheel will trim nose-down; conversely, aft rotation will trim nose-up.

INSTRUMENT PANEL

The instrument panel (see figure 7-2) is designed to place the primary flight instruments directly in front of the pilot. The gyro-operated flight instruments are arranged one above the other, slightly to the left of the control column. To the left of these instruments are the airspeed indicator, turn coordinator, and suction gage. The clock, altimeter, vertical speed indicator, and navigation instruments are above and/or to the right of the control column. Avionics equipment is stacked approximately on the centerline of the panel, with space for additional equipment on the lower right side of the instrument panel. The right side of the panel also contains the tachometer, ammeter, low-voltage light, economy mixture indicator (EGT) and additional instruments such as a flight hour recorder. The left switch and control panel, under the primary instrument panel, contains

For Flight Training Reference Only

the fuel quantity indicators, cigar lighter, and engine instruments positioned below the pilot's control wheel. The electrical switches, panel and radio light rheostat knob, ignition and master switches, primer, and parking brake control are located around these instruments. The engine controls, wing flap switch, and cabin air and heat control knobs are to the right of the pilot, at the center of the switch and control panel. Directly below these controls are the elevator trim control wheel, trim position indicator, microphone, and circuit breakers. A map compartment is on the extreme right side of the switch and control panel.

For details concerning the instruments, switches, circuit breakers, and controls on this panel, refer in this section to the description of the systems to which these items are related.

GROUND CONTROL

Effective ground control while taxiing is accomplished through nose wheel steering by using the rudder pedals; left rudder pedal to steer left and right rudder pedal to steer right. When a rudder pedal is depressed, a spring-loaded steering bungee (which is connected to the nose gear and to the rudder bars) will turn the nose wheel through an arc of approximately 8.5° each side of center. By applying either left or right brake, the degree of turn may be increased up to 30° each side of center.

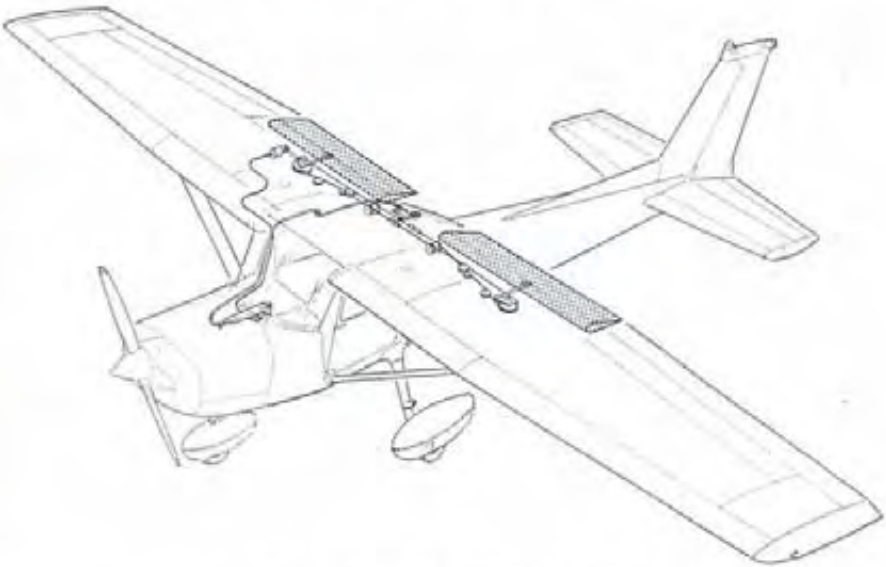

Figure 7-3. Wing Flap System

For Flight Training Reference Only

Moving the airplane by hand is most easily accomplished by attaching a tow bar to the nose gear strut. If a tow bar is not available, or pushing is required, use the wing struts as push points. Do not use the vertical or horizontal surfaces to move the airplane. If the airplane is to be towed by vehicle, never turn the nose wheel more than 30° either side of center or structural damage to the nose gear could result.

The minimum turning radius of the airplane, using differential braking and nose wheel steering during taxi, is approximately 24 feet 8 inches. To obtain a minimum radius turn during ground handling, the airplane may be rotated around either main landing gear by pressing down on the tailcone just forward of the vertical stabilizer to raise the nose wheel off the ground.

WING FLAP SYSTEM

The wing flaps are of the single-slot type with a maximum deflection of 30° (see figure 7-3). They are extended or retracted by positioning the wing flap switch lever on the instrument panel to the desired flap deflection position. The switch lever is moved up or down in a slot in the instrument panel that provides mechanical stops at the 10° and 20° positions. For flap settings greater than 10°, move the switch lever to the right to clear the stop and position it as desired. A scale and pointer on the left side of the switch lever indicates flap travel in degrees. The wing flap system circuit is protected by a 15-ampere circuit breaker, labeled FLAP, on the right side of the instrument panel.

LANDING GEAR SYSTEM

The landing gear is of the tricycle type with a steerable nose wheel and two main wheels. The landing gear may be equipped with wheel fairings. Shock absorption is provided by the tubular spring-steel main landing gear struts and the air/oil nose gear shock strut. Each main gear wheel is equipped with a hydraulically actuated disc-type brake on the inboard side of each wheel. When wheel fairings are installed an aerodynamic fairing covers each brake.

BAGGAGE COMPARTMENT

The baggage compartment consists of the area from the back of the pilot and passenger's seats to the aft cabin bulkhead. Access to the baggage

For Flight Training Reference Only

compartment is gained from within the airplane cabin. A baggage net with six tie-down straps is provided for securing baggage and is attached by tying the straps to tie-down rings provided in the airplane. When loading the airplane, children should not be placed or permitted in the baggage compartment, unless a child's seat is installed, and any material that might be hazardous to the airplane or occupants should not be placed anywhere in the airplane. For baggage area dimensions, refer to Section 6.

SEATS

The seating arrangement consists of two separate adjustable seats for the pilot and passenger and, if installed, a child's seat in the rear cabin area. The pilot's and passenger's seats are available in two designs: four-way and six-way adjustable.

Four-way seats may be moved forward or aft, and the seat back angle changed. To position either seat, lift the lever under the inboard corner of the seat, slide the seat into position, release the lever, and check that the seat is locked in place. To adjust the seat back, pull forward on the knob under the center of the seat and apply pressure to the back. To return the seat back to the upright position, pull forward on the exposed portion of the seat back frame. Both seat backs will also fold full forward.

The six-way seats may be moved forward or aft, adjusted for height, and the seat back angle changed. Position either seat by lifting the tubular handle under the inboard front corner of the seat bottom and slide the seat to the desired position. Release the lever and check that the seat is locked in place. To raise or lower the seat, rotate the crank located under the outboard corner of each seat. Seat back angle is adjustable by rotating a lever on the rear inboard corner of each seat. To adjust either seat back, rotate the lever aft and apply pressure against the back until it stops moving; then release the lever. The seat back may be returned to the upright position by pulling forward on the exposed portion of the lower seat back frame. Check that the release lever has returned to its vertical position. Both seat backs will fold full forward.

A child's seat is available for installation in the rear of the cabin. The seat back is secured to the cabin sidewalls, and the seat bottom is attached to brackets on the floor. This seat is non-adjustable.

For Flight Training Reference Only

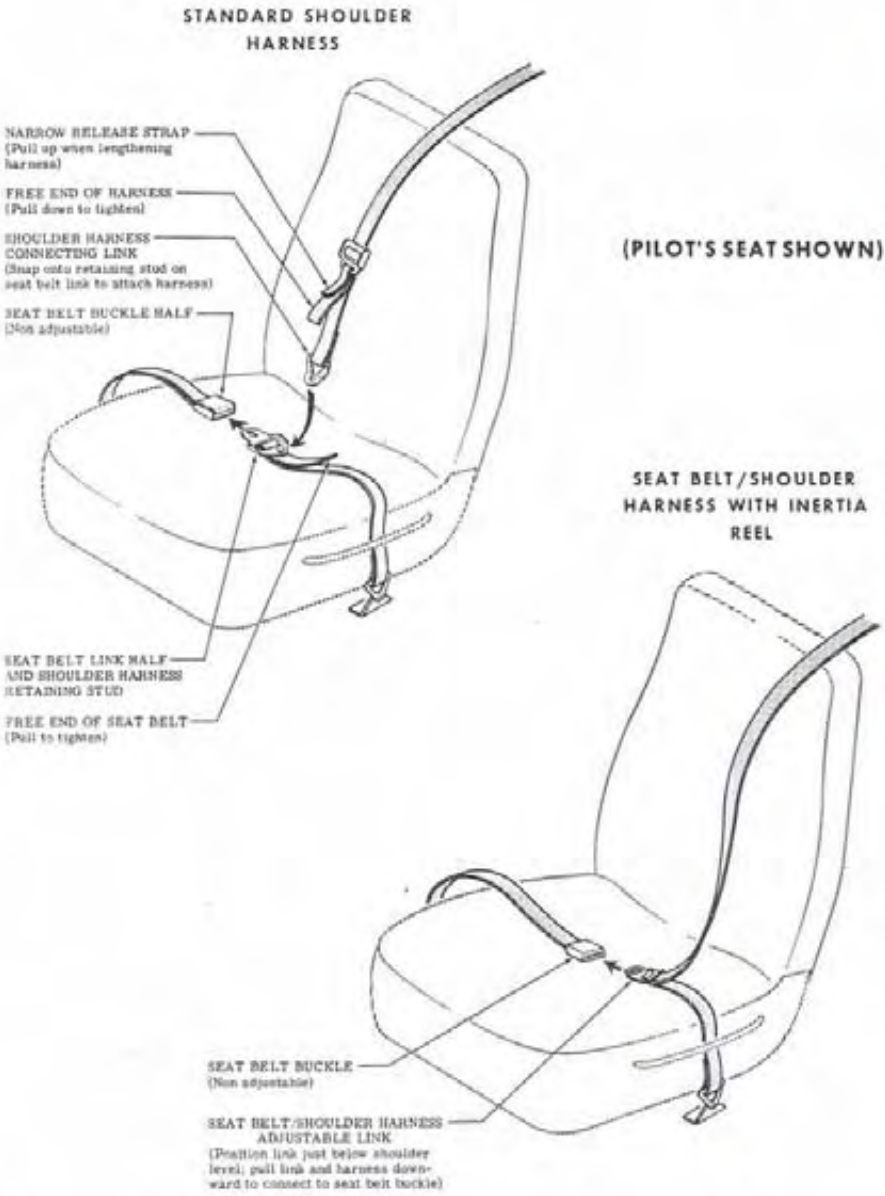

Figure 7-4. Seat Belts and Shoulder Harnesses

For Flight Training Reference Only

SEAT BELTS AND SHOULDER HARNESSES

All seat positions are equipped with seat belts (see figure 7-4). The pilot's and passenger's seats are also equipped with separate shoulder harnesses. Integrated seat belt/shoulder harnesses with inertia reels can be furnished for the pilot's and passenger's seat positions if desired.

SEAT BELTS

The seat belts used with the pilot's seat, passenger's seat, and the child's seat (if installed) are attached to fittings on the floorboard. The buckle half of the seat belt is inboard of each seat and has a fixed length; the link half of the belt is outboard and is the adjustable part of the belt.

To use the seat belts for the pilot's and passenger's seats, position the seat as desired, and then lengthen the link half of the belt as needed by grasping the sides of the link and pulling against the belt. Insert and lock the belt link into the buckle. Tighten the belt to a snug fit by pulling the free end of the belt. The seat belt for the child's seat (if installed) is used in the same manner as the belts for the pilot's and passenger's seats. To release the seat belts, grasp the top of the buckle opposite the link and pull upward.

SHOULDER HARNESSES

Each shoulder harness is attached to a rear doorpost above the window line and is stowed behind a stowage sheath above the cabin door. To stow the harness, fold it and place it behind the sheath. No harness is available for the child's seat.

The shoulder harnesses are used by fastening and adjusting the seat belt first. Then, lengthen the harness as required by pulling on the connecting link on the end of the harness and the narrow release strap. Snap the connecting link firmly onto the retaining stud on the seat belt link half. Then adjust to length. Removing the harness is accomplished by pulling upward on the narrow release strap and removing the harness connecting link from the stud on the seat belt link. In an emergency, the shoulder harness may be removed by releasing the seat belt first and allowing the harness, still attached to the link half of the seat belt, to drop to the side of the seat.

Adjustment of the shoulder harness is important. A properly adjusted harness will permit the occupant to lean forward enough to sit completely erect, but prevent excessive forward movement and contact with objects during sudden deceleration. Also, the pilot will want the freedom to reach all controls easily.

For Flight Training Reference Only

INTEGRATED SEAT BELT/SHOULDER HARNESSES WITH INERTIA REELS

Integrated seat belt/shoulder harnesses with inertia reels are available for the pilot and front seat passenger. The seat belt/shoulder harnesses extend from inertia reels located in the upper cabin sidewall just aft of each cabin door to attach points outboard of the front seats. A separate seat belt half and buckle is located inboard of the seats. Inertia reels allow complete freedom of body movement. However, in the event of a sudden deceleration, they will lock automatically to protect the occupants.

To use the seat belt/shoulder harness, position the adjustable metal link on the harness at about shoulder level, pull the link and harness downward, and insert the link in the seat belt buckle. Adjust belt tension across the lap by pulling upward on the shoulder harness. Removal is accomplished by releasing the seat belt buckle, which will allow the inertia reel to pull the harness outboard of the seat.

ENTRANCE DOORS AND CABIN WINDOWS

Entry to, and exit from the airplane is accomplished through either of two entry doors, one on each side of the cabin (refer to Section 6 for cabin and cabin door dimensions). The doors incorporate a recessed exterior and interior door handle, a key-operated door lock (left door only), a door stop mechanism, and an openable window.

To open the doors from outside the airplane, utilize the recessed door handle near the aft edge of each door. Grasp the forward edge of the handle and pull out. To close or open the doors from inside the airplane, use the recessed door handle and arm rest. Both cabin doors should be checked for security prior to flight, and should not be opened intentionally during flight.

NOTE

> Accidental opening of a cabin door in flight due to improper closing does not constitute a need to land the airplane. The best procedure is to set up the airplane in a trimmed condition at approximately 65 KIAS, momentarily shove the door outward slightly, and forcefully close the door.

Exit from the airplane is accomplished by grasping the forward edge of the door handle and pulling. To lock the airplane, lock the right cabin door from the inside by lifting up on the lever near the aft edge of the door, close the left cabin door, and using the ignition key, lock the door.

For Flight Training Reference Only

Both cabin doors are equipped with openable windows. The windows are held in the closed position by a detent equipped latch on the lower edge of the window frame. To open either window, rotate the latch upward. The windows are equipped with a spring-loaded retaining arm which will help rotate the window outward, and hold it there. If required, the windows may be opened at any speed up to 149 KIAS. All other cabin windows are of the fixed type and cannot be opened. Two additional fixed windows may be installed in the cabin top.

CONTROL LOCKS

A control lock is provided to lock the aileron and elevator control surfaces to prevent damage to these systems by wind buffeting while the airplane is parked. The lock consists of a shaped steel rod with a red metal flag attached to it. The flag is labeled CONTROL LOCK, REMOVE BEFORE STARTING ENGINE. To install the control lock, align the hole in the top of the pilot's control wheel shaft with the hole in the top of the shaft collar on the instrument panel and insert the rod into the aligned holes. Installation of the lock will secure the ailerons in a neutral position and the elevators in a slightly trailing edge down position. Proper installation of the lock will place the red flag over the ignition switch. In areas where high or gusty winds occur, a control surface lock should be installed over the vertical stabilizer and rudder. The control lock and any other type of locking device should be removed prior to starting the engine.

ENGINE

The airplane is powered by a horizontally-opposed, four-cylinder, overhead-valve, air-cooled, carbureted engine with a wet sump oil system. The engine is a Lycoming Model O-235-L2C and is rated at 110 horsepower at 2550 RPM. Major engine accessories (mounted on the front of the engine) include a starter, a belt-driven alternator, and an oil cooler. Dual magnetos are mounted on an accessory drive pad on the rear of the engine. Provisions are also made for a vacuum pump and full flow oil filter.

ENGINE CONTROLS

Engine power is controlled by a throttle located on the lower center portion of the instrument panel. The throttle operates in a conventional manner; in the full forward position, the throttle is open, and in the full aft position, it is closed. A friction lock, which is a round knurled disk, is located at the base of the throttle and is operated by rotating the lock clockwise to increase friction or counterclockwise to decrease it.

For Flight Training Reference Only

The mixture control, mounted above the right corner of the control pedestal, is a red knob with raised points around the circumference and is equipped with a lock button in the end of the knob. The rich position is full forward, and full aft is the idle cut-off position. For small adjustments, the control may be moved forward by rotating the knob clockwise, and aft by rotating the knob counterclockwise. For rapid or large adjustments, the knob may be moved forward or aft by depressing the lock button in the end of the control, and then positioning the control as desired.

ENGINE INSTRUMENTS

Engine operation is monitored by the following instruments: oil pressure gage, oil temperature gage, and a tachometer. An economy mixture (EGT) indicator is also available.

The oil pressure gage, located on the left switch and control panel, is operated by oil pressure. A direct pressure oil line from the engine delivers oil at engine operating pressure to the oil pressure gage. Gage markings indicate that minimum idling pressure is 25 PSI (red line), the normal operating range is 60 to 90 PSI (green arc), and maximum pressure is 115 PSI (red line).

Oil temperature is indicated by a gage located on the left switch and control panel. The gage is operated by an electrical-resistance type temperature sensor which receives power from the airplane electrical system. Oil temperature limitations are the normal operating range (green arc) which is 100°F (38°C) to 245°F (118°C), and the maximum (red line) which is 245°F (118°C).

The engine-driven mechanical tachometer is located near the upper center portion of the instrument panel. The instrument is calibrated in increments of 100 RPM and indicates both engine and propeller speed. An hour meter below the center of the tachometer dial records elapsed engine time in hours and tenths. Instrument markings include a normal operating range (green arc) of 1900 to 2550 RPM, and a maximum (red line) of 2550 RPM. The upper end of the green arc is "stepped" to indicate approximate RPM for 75% engine power at sea level (2350 RPM), at 4000 feet (2450 RPM), and at 8000 feet (2550 RPM).

An economy mixture (EGT) indicator is available for the airplane and is located on the right side of the instrument panel. A thermocouple probe in the muffler tailpipe measures exhaust gas temperature and transmits it to the indicator. The indicator serves as a visual aid to the pilot in adjusting cruise mixture. Exhaust gas temperature varies with fuel-to-air ratio, power, and RPM. However, the difference between the peak EGT and the EGT at the cruise mixture setting is essentially constant and this provides a useful leaning aid. The indicator is equipped with a manually positioned reference pointer.

For Flight Training Reference Only

NEW ENGINE BREAK-IN AND OPERATION

The engine underwent a run-in at the factory and is ready for the full range of use. It is, however, suggested that cruising be accomplished at a minimum of 75% power until a total of 25 hours has accumulated or oil consumption has stabilized. This will ensure proper seating of the rings.

The airplane is delivered from the factory with corrosion preventive oil in the engine. If, during the first 25 hours, oil must be added, use only aviation grade straight mineral oil conforming to Specification No. MIL-L-6082.

ENGINE OIL SYSTEM

Oil for engine lubrication is supplied from a sump on the bottom of the engine. The capacity of the engine sump is six quarts (one additional quart is required if a full flow oil filter is installed). Oil is drawn from the sump through an oil suction strainer screen into the engine-driven oil pump. From the pump, oil is routed directly to the oil cooler and returns to the engine where it passes through the pressure screen, if the engine does not incorporate a full flow oil filter. If the engine is equipped with a full flow oil filter, oil passes from the pump to a thermostatically controlled bypass valve. If the oil is cold, the bypass valve allows the oil to bypass the oil cooler and flow directly to the filter. If the oil is hot, the bypass valve routes the oil from the accessory case forward through a flexible hose to the engine oil cooler mounted on the left forward side of the engine. Returning to the accessory case, the oil passes through the filter. The filtered oil then enters a pressure relief valve which regulates engine oil pressure by allowing excessive oil to return to the sump, while the balance of the pressure oil is circulated to various engine parts for lubrication. Residual oil returns to the sump by gravity flow.

An oil filler cap/oil dipstick is located at the rear of the engine on the right side. The filler cap/dipstick is accessible through an access door in the engine cowling. The engine should not be operated on less than four quarts of oil. To minimize loss of oil through the breather, fill to five quarts for normal flights of less than three hours. For extended flight, fill to six quarts (dipstick indication only). For engine oil grade and specifications, refer to Section 8 of this handbook.

An oil quick-drain valve is available to replace the drain plug in the oil sump drain port, and provides quicker, cleaner draining of the engine oil. To drain the oil with this valve installed, slip a hose over the end of the valve and push upward on the end of the valve until it snaps into the open position. Spring clips will hold the valve open. After draining, use a suitable tool to snap the valve into the extended (closed) position and remove the drain hose.

For Flight Training Reference Only

IGNITION-STARTER SYSTEM

Engine ignition is provided by two engine-driven magnetos, and two spark plugs in each cylinder. The right magneto fires the lower right and the upper left spark plugs, and the left magneto fires the lower left and upper right spark plugs. Normal operation is conducted with both magnetos due to the more complete burning of the fuel-air mixture with dual ignition.

Ignition and starter operation is controlled by a rotary type switch located on the left switch and control panel. The switch is labeled clockwise, OFF, R, L, BOTH, and START. The engine should be operated on both magnetos (BOTH position) except for magneto checks. The R and L positions are for checking purposes and emergency use only. When the switch is rotated to the spring-loaded START position, (with the master switch in the ON position), the starter contactor is energized and the starter will crank the engine. When the switch is released, it will automatically return to the BOTH position.

AIR INDUCTION SYSTEM

The engine air induction system receives ram air through an intake in the lower portion of the engine cowling. The intake is covered by an air filter which removes dust and other foreign matter from the induction air. Airflow passing through the filter enters an airbox. After passing through the airbox, induction air enters the inlet in the carburetor which is under the engine, and is then ducted to the engine cylinders through intake manifold tubes. In the event carburetor ice is encountered or the intake filter becomes blocked, alternate heated air can be obtained from a shroud around an exhaust riser through a duct to a valve, in the airbox, operated by the carburetor heat control on the instrument panel. Heated air from the shroud is obtained from an unfiltered outside source. Use of full carburetor heat at full throttle will result in a loss of approximately 150 RPM.

EXHAUST SYSTEM

Exhaust gas from each cylinder passes through riser assemblies to a muffler and tailpipe on the underside of the engine. The muffler is constructed with a shroud around the outside which forms a heating chamber for carburetor heat and cabin heater air.

CARBURETOR AND PRIMING SYSTEM

The engine is equipped with an up-draft, float-type, fixed jet carburetor mounted on the bottom of the engine. The carburetor is equipped with an enclosed accelerator pump, an idle cut-off mechanism, and a manual mixture control. Fuel is delivered to the carburetor by gravity flow from

For Flight Training Reference Only

the fuel system. In the carburetor, fuel is atomized, proportionally mixed with intake air, and delivered to the cylinders through intake manifold tubes. The proportion of atomized fuel to air is controlled, within limits, by the mixture control on the instrument panel.

For starting, the engine is equipped with a manual priming system. The primer is actually a small pump which draws fuel from the fuel strainer when the plunger is pulled out, and injects it into the cylinder intake ports when the plunger is pushed back in. The plunger knob, on the instrument panel, is equipped with a lock and, after being pushed full in, must be rotated either left or right until the knob cannot be pulled out.

COOLING SYSTEM

Ram air for engine cooling enters through two intake openings in the front of the engine cowling. The cooling air is directed around the cylinders and other areas of the engine by baffling, and is then exhausted through an opening at the bottom aft edge of the cowling. No manual cooling system control is provided.

A winterization kit is available for the airplane. Details of this kit are presented in Section 9, Supplements.

PROPELLER

The airplane is equipped with a two-bladed, fixed-pitch, one-piece forged aluminum alloy propeller which is anodized to retard corrosion. The propeller is 69 inches in diameter.

FUEL SYSTEM

The airplane may be equipped with either a standard fuel system or long range system (see figure 7-6). Both systems consist of two vented fuel tanks (one in each wing), a fuel shutoff valve, fuel strainer, manual primer, and carburetor. Refer to figure 7-5 for fuel quantity data for both systems.

Fuel flows by gravity from the two wing tanks to a fuel shutoff valve. With the valve in the ON position, fuel flows through a strainer to the carburetor. From the carburetor, mixed fuel and air flows to the cylinders through intake manifold tubes. The manual primer draws its fuel from the fuel strainer and injects it into the cylinder intake ports.

Fuel system venting is essential to system operation. Blockage of the venting system will result in a decreasing fuel flow and eventual engine stoppage. Venting is accomplished by an interconnecting line from the right fuel tank to the left tank. The left tank is vented overboard through a vent line which is equipped with a check valve, and protrudes from the

For Flight Training Reference Only

FUEL QUANTITY DATA (U. S. GALLONS)			
TANKS	TOTAL USABLE FUEL ALL FLIGHT CONDITIONS	TOTAL UNUSABLE FUEL	TOTAL FUEL VOLUME
STANDARD (13 Gal. Each)	24.5	1.5	26.0
LONG RANGE (19.5 Gal. Each)	37.5	1.5	39.0

Figure 7-5. Fuel Quantity Data

bottom surface of the left wing near the wing strut attach point. The right fuel tank filler cap is also vented.

Fuel quantity is measured by two float-type fuel quantity transmitters (one in each tank) and indicated by two electrically-operated fuel quantity indicators on the lower left portion of the instrument panel. An empty tank is indicated by a red line and the letter E. When an indicator shows an empty tank, approximately .75 gallon remains in either a standard or long range tank as unusable fuel. The indicators cannot be relied upon for accurate readings during skids, slips, or unusual attitudes.

The amount of unusable fuel is relatively small due to the dual outlets at each tank. The maximum unusable fuel quantity, as determined from the most critical flight condition, is about 1.5 gallons total. This quantity was not exceeded by any other reasonable flight condition, including prolonged 30 second full-rudder sideslips in the landing configuration. Takeoffs have not been demonstrated with less than 2 gallons total fuel (1 gallon per tank).

The fuel system is equipped with drain valves to provide a means for the examination of fuel in the system for contamination and grade. The system should be examined before the first flight of every day and after each refueling, by using the sampler cup provided to drain fuel from the wing tank sumps, and by utilizing the fuel strainer drain under an access panel on the right side of the engine cowling. The fuel tanks should be filled after each flight to prevent condensation.

When the airplane is equipped with long range tanks, it may be serviced to a reduced fuel capacity to permit heavier cabin loadings. This is accomplished by filling each tank to the bottom of the indicator on the fuel filler neck. When filled to this level, the tank contains 13 gallons (12.25 usable in all flight conditions).

For Flight Training Reference Only

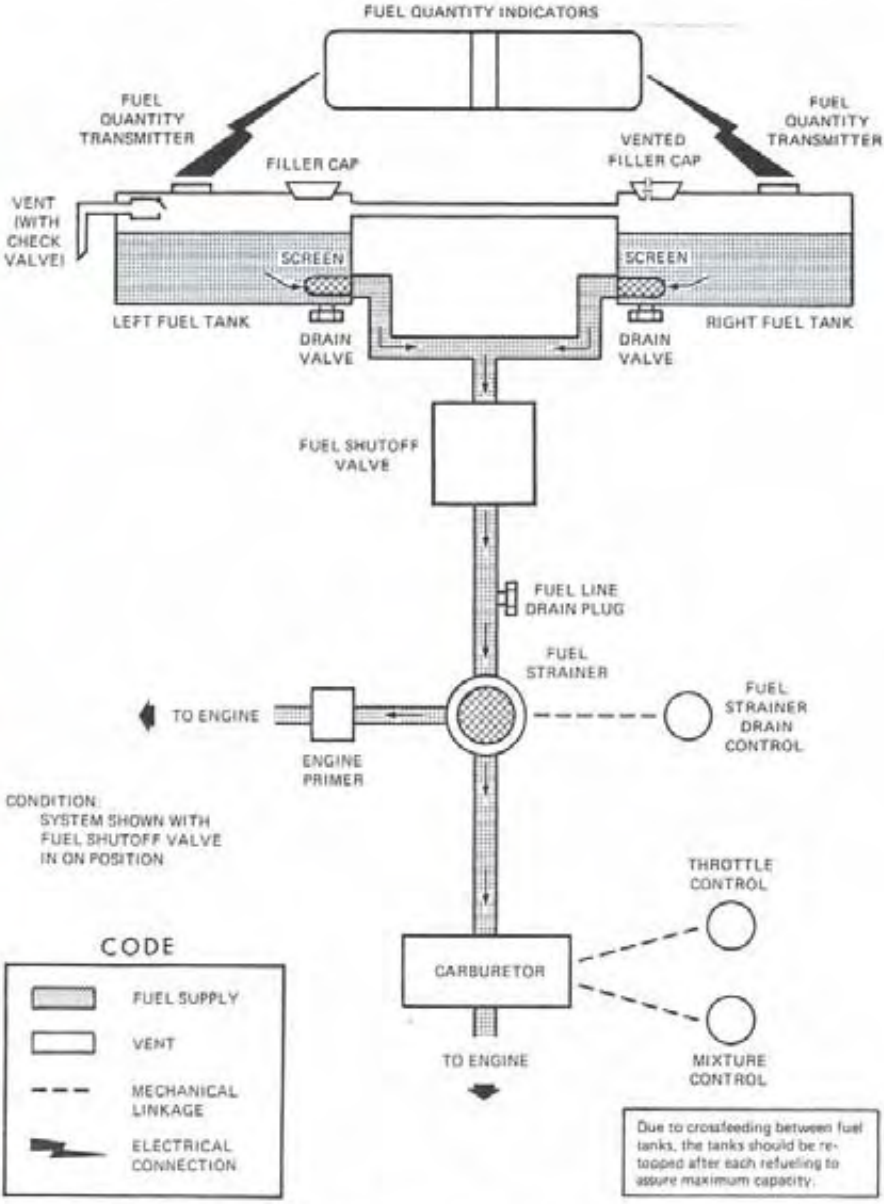

Figure 7-6. Fuel System (Standard and Long Range)

For Flight Training Reference Only

BRAKE SYSTEM

The airplane has a single-disc, hydraulically-actuated brake on each main landing gear wheel. Each brake is connected, by a hydraulic line, to a master cylinder attached to each of the pilot's rudder pedals. The brakes are operated by applying pressure to the top of either the left (pilot's) or right (copilot's) set of rudder pedals, which are interconnected. When the airplane is parked, both main wheel brakes may be set by utilizing the parking brake which is operated by a knob on the lower left side of the instrument panel.

For maximum brake life, keep the brake system properly maintained, and minimize brake usage during taxi operations and landings.

Some of the symptoms of impending brake failure are: gradual decrease in braking action after brake application, noisy or dragging brakes, soft or spongy pedals, and excessive travel and weak braking action. If any of these symptoms appear, the brake system is in need of immediate attention. If, during taxi or landing roll, braking action decreases, let up on the pedals and then re-apply the brakes with heavy pressure. If the brakes become spongy or pedal travel increases, pumping the pedals should build braking pressure. If one brake becomes weak or fails, use the other brake sparingly while using opposite rudder, as required, to offset the good brake.

ELECTRICAL SYSTEM

The airplane is equipped with a 28-volt, direct-current electrical system (see figure 7-7). This system uses a 24-volt battery mounted on the right forward side of the firewall as the source of electrical energy and a belt-driven 60-amp alternator to maintain the battery's state of charge. Power is supplied to a bus bar, and a master switch controls this power to all circuits, except the engine ignition system, clock, and flight hour recorder (if installed). The flight hour recorder receives power through activation of an oil pressure switch whenever the engine is operating, and the clock is supplied with current at all times. All avionics equipment should be turned off prior to starting the engine or using an external power source to prevent harmful transient voltages from damaging the transistors in this equipment.

MASTER SWITCH

The master switch is a split-rocker type switch labeled MASTER, and is ON in the up position and OFF in the down position. The right half of the switch, labeled BAT, controls all electrical power to the airplane. The left half, labeled ALT, controls the alternator.

For Flight Training Reference Only

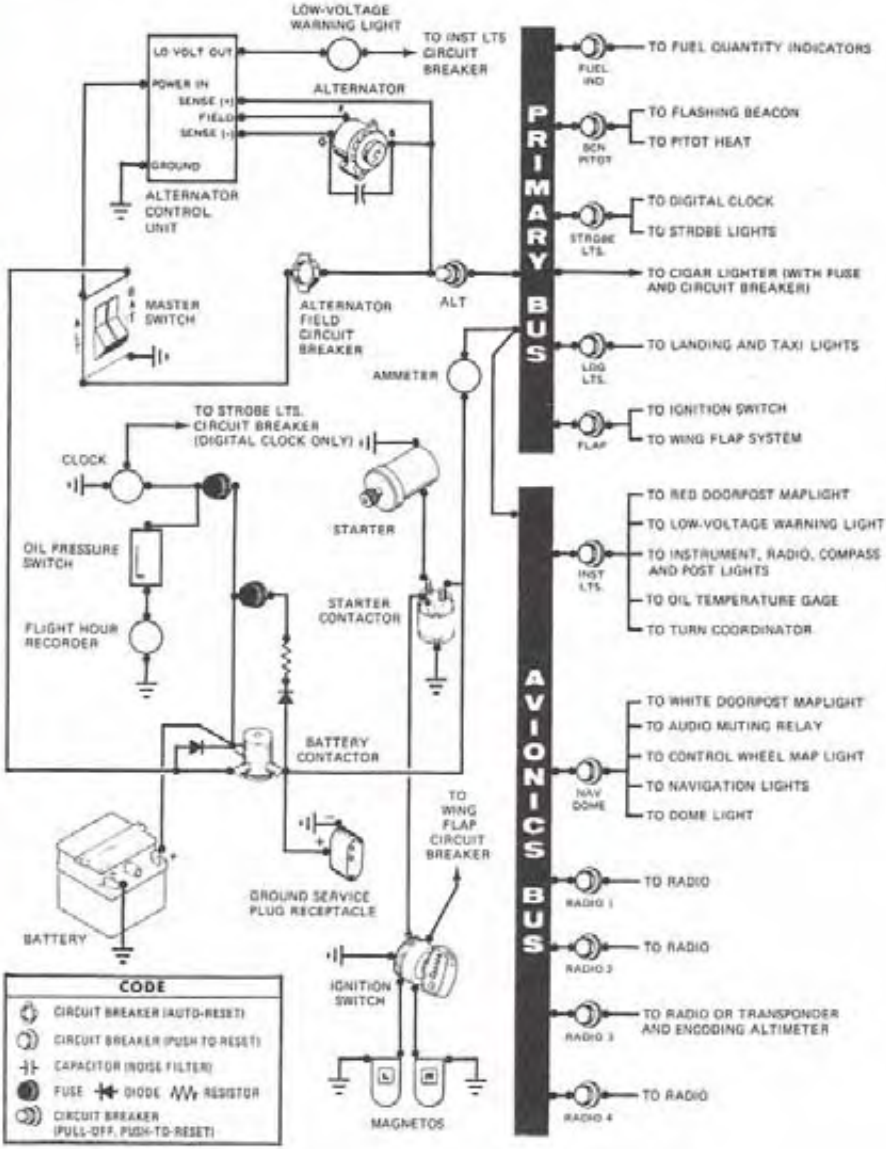

Figure 7-7. Electrical System

For Flight Training Reference Only

Normally, both sides of the master switch should be used simultaneously; however, the BAT side of the switch could be turned ON separately to check equipment while on the ground. The ALT side of the switch, when placed in the OFF position, removes the alternator from the electrical system. With this switch in the OFF position, the entire electrical load is placed on the battery. Continued operation with the alternator switch in the OFF position will reduce battery power low enough to open the battery contactor, remove power from the alternator field, and prevent alternator restart.

AMMETER

The ammeter, located on the upper right side of the instrument panel, indicates the amount of current, in amperes, from the alternator to the battery or from the battery to the airplane electrical system. When the engine is operating and the master switch is turned on, the ammeter indicates the charging rate applied to the battery. In the event the alternator is not functioning or the electrical load exceeds the output of the alternator, the ammeter indicates the battery discharge rate.

ALTERNATOR CONTROL UNIT AND LOW-VOLTAGE WARNING LIGHT

The airplane is equipped with a combination alternator regulator high-low voltage control unit mounted on the engine side of the firewall and a red warning light, labeled LOW VOLTAGE, under the ammeter on the instrument panel.

In the event an over-voltage condition occurs, the alternator control unit automatically removes alternator field current which shuts down the alternator. The battery will then supply system current as shown by a discharge rate on the ammeter. Under these conditions, depending on electrical system load, the low-voltage warning light will illuminate when system voltage drops below normal. The alternator control unit may be reset by turning the master switch off and back on again. If the warning light does not illuminate, normal alternator charging has resumed; however, if the light does illuminate again, a malfunction has occurred, and the flight should be terminated as soon as practicable.

NOTE

Illumination of the low-voltage light and ammeter discharge indications may occur during low RPM conditions with an electrical load on the system, such as during a low RPM taxi. Under these conditions, the light will go out at higher RPM. The master switch need not be recycled since an over-voltage condition has not occurred to de-activate

For Flight Training Reference Only

the alternator system.

The warning light may be tested by turning on the landing lights and momentarily turning off the ALT portion of the master switch while leaving the BAT portion turned on.

CIRCUIT BREAKERS AND FUSES

Most of the electrical circuits in the airplane are protected by "push-to-reset" type circuit breakers mounted under the engine controls on the instrument panel. However, alternator output is protected by a "pull-off" type circuit breaker. The cigar lighter is equipped with a manually-reset type circuit breaker located on the back of the lighter and a fuse behind the instrument panel. The control wheel map light (if installed) is protected by the NAV/DOME circuit breaker, and a fuse behind the instrument panel. Electrical circuits which are not protected by circuit breakers are the battery contactor closing (external power) circuit, clock circuit, and flight hour recorder circuit. These circuits are protected by fuses mounted adjacent to the battery.

GROUND SERVICE PLUG RECEPTACLE

A ground service plug receptacle may be installed to permit the use of an external power source for cold weather starting and during lengthy maintenance work on the electrical and electronic equipment. Details of the ground service plug receptacle are presented in Section 9, Supplements.

LIGHTING SYSTEMS

EXTERIOR LIGHTING

Conventional navigation lights are located on the wing tips and top of the rudder. Additional lighting is available and includes a single or dual landing/taxi light mounted in the cowling nose cap, a flashing beacon located on top of the vertical fin, and a strobe light installed on each wing tip. Details of the strobe light system are presented in Section 9, Supplements.

All exterior lights are controlled by rocker switches on the left switch and control panel. The switches are ON in the up position and OFF in the down position.

The flashing beacon should not be used when flying through clouds or overcast: the flashing light reflected from water droplets or particles in the atmosphere, particularly at night, can produce vertigo and loss of orientation.

For Flight Training Reference Only

INTERIOR LIGHTING

Instrument and control panel lighting is provided by flood lighting, integral lighting, and post lighting (if installed). Two concentric rheostat control knobs on the left switch and control panel, labeled PANEL LT and RADIO LT, control intensity of the instrument and control panel lighting. A slide-type switch (if installed) on the overhead console, labeled PANEL LIGHTS, is used to select flood lighting in the FLOOD position, post lighting in the POST position, or a combination of post and flood lighting in the BOTH position.

Instrument and control panel flood lighting consists of a single red flood light in the forward part of the overhead console. To use the flood lighting, rotate the PANEL LT rheostat control knob clockwise to the desired intensity.

The instrument panel may be equipped with post lights which are mounted at the edge of each instrument and provide direct lighting. The lights are operated by placing the PANEL LIGHTS selector switch, located in the overhead console, in the POST position and adjusting light intensity with the PANEL LT rheostat control knob. By placing the PANEL LIGHTS selector switch in the BOTH position, the post lights can be used in combination with the standard flood lighting.

The engine instrument cluster (if post lighting is installed), radio equipment, and magnetic compass have integral lighting and operate independently of post or flood lighting. Light intensity of the radio lighting is controlled by the RADIO LT rheostat control knob. The integral compass and engine instrument cluster light intensity is controlled by the PANEL LT rheostat control knob.

A cabin dome light, in the overhead console, is operated by a switch on the left switch and control panel. To turn the light on, move the switch to the ON position.

A control wheel map light is available and is mounted on the bottom of the pilot's control wheel. The light illuminates the lower portion of the cabin just forward of the pilot and is helpful when checking maps and other flight data during night operations. To operate the light, first turn on the NAV LT switch; then adjust the map light's intensity with the rheostat control knob located at the bottom of the control wheel.

A doorpost map light is available, and is located on the left forward doorpost. It contains both red and white bulbs and may be positioned to illuminate any area desired by the pilot. The light is controlled by a switch, above the light, which is labeled RED, OFF, and WHITE. Placing the switch in the top position will provide a red light. In the bottom position, standard

For Flight Training Reference Only

white lighting is provided. In the center position, the map light is turned off. Light intensity of the red light is controlled by the PANEL LT rheostat control knob.

The most probable cause of a light failure is a burned out bulb; however, in the event any of the lighting systems fail to illuminate when turned on, check the appropriate circuit breaker. If the circuit breaker has opened (white button popped out), and there is no obvious indication of a short circuit (smoke or odor), turn off the light switch of the affected lights, reset the breaker, and turn the switch on again. If the breaker opens again, do not reset it.

CABIN HEATING, VENTILATING AND DEFROSTING SYSTEM

The temperature and volume of airflow into the cabin can be regulated by manipulation of the push-pull CABIN HT and CABIN AIR control knobs (see figure 7-8).

Heated fresh air and outside air are blended in a cabin manifold just aft of the firewall by adjustment of the heat and air controls; this air is then vented into the cabin from outlets in the cabin manifold near the pilot's and passenger's feet. Windshield defrost air is also supplied by a duct leading from the manifold to a pair of outlets below the windshield.

For cabin ventilation, pull the CABIN AIR knob out. To raise the air temperature, pull the CABIN HT knob out approximately 1/4 to 1/2 inch for a small amount of cabin heat. Additional heat is available by pulling the knob out farther; maximum heat is available with the CABIN HT knob pulled out and the CABIN AIR knob pushed full in. When no heat is desired in the cabin, the CABIN HT knob is pushed full in.

Additional ventilation air may be obtained by opening the adjustable ventilators near the upper left and right corners of the windshield.

PITOT-STATIC SYSTEM AND INSTRUMENTS

The pitot-static system supplies ram air pressure to the airspeed indicator and static pressure to the airspeed indicator, vertical speed indicator and altimeter. The system is composed of either an unheated or heated pitot tube mounted on the lower surface of the left wing, an external static port on the lower left side of the forward fuselage, and the associated plumbing necessary to connect the instruments to the sources.

For Flight Training Reference Only

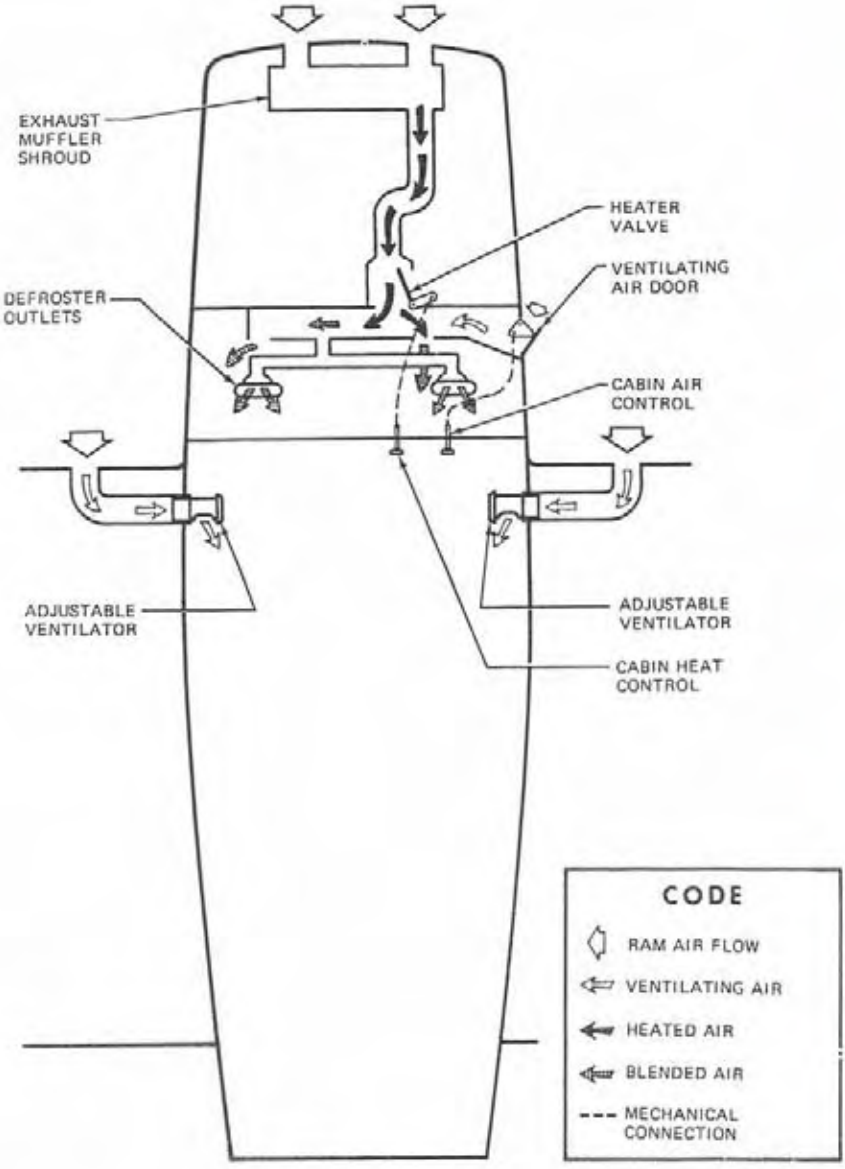

Figure 7-8. Cabin Heating, Ventilating, and Defrosting System

For Flight Training Reference Only

The heated pitot system consists of a heating element in the pitot tube, a rocker-type switch labeled PITOT HT on the left switch and control panel, a 15-amp circuit breaker under the engine controls on the instrument panel, and associated wiring. When the pitot heat switch is turned on, the element in the pitot tube is heated electrically to maintain proper operation in possible icing conditions. Pitot heat should be used only as required.

AIRSPEED INDICATOR

The airspeed indicator is calibrated in knots and miles per hour. Limitation and range markings (in KIAS) include the white arc (35 to 85 knots), green arc (40 to 111 knots), yellow arc (111 to 149 knots), and a red line (149 knots).

If a true airspeed indicator is installed, it is equipped with a rotatable ring which works in conjunction with the airspeed indicator dial in a manner similar to the operation of a flight computer. To operate the indicator, first rotate the ring until pressure altitude is aligned with outside air temperature in degrees Fahrenheit. Pressure altitude should not be confused with indicated altitude. To obtain pressure altitude, momentarily set the barometric scale on the altimeter to 29.92 and read pressure altitude on the altimeter. Be sure to return the altimeter barometric scale to the original barometric setting after pressure altitude has been obtained. Having set the ring to correct for altitude and temperature, read the true airspeed shown on the rotatable ring by the indicator pointer. For best accuracy, the indicated airspeed should be corrected to calibrated airspeed by referring to the Airspeed Calibration chart in Section 5. Knowing the calibrated airspeed, read true airspeed on the ring opposite the calibrated airspeed.

VERTICAL SPEED INDICATOR

The vertical speed indicator depicts airplane rate of climb or descent in feet per minute. The pointer is actuated by atmospheric pressure changes resulting from changes of altitude as supplied by the static source.

ALTIMETER

Airplane altitude is depicted by a barometric type altimeter. A knob near the lower left portion of the indicator provides adjustment of the instrument's barometric scale to the current altimeter setting.

VACUUM SYSTEM AND INSTRUMENTS

An engine-driven vacuum system (see figure 7-9) is available and

For Flight Training Reference Only

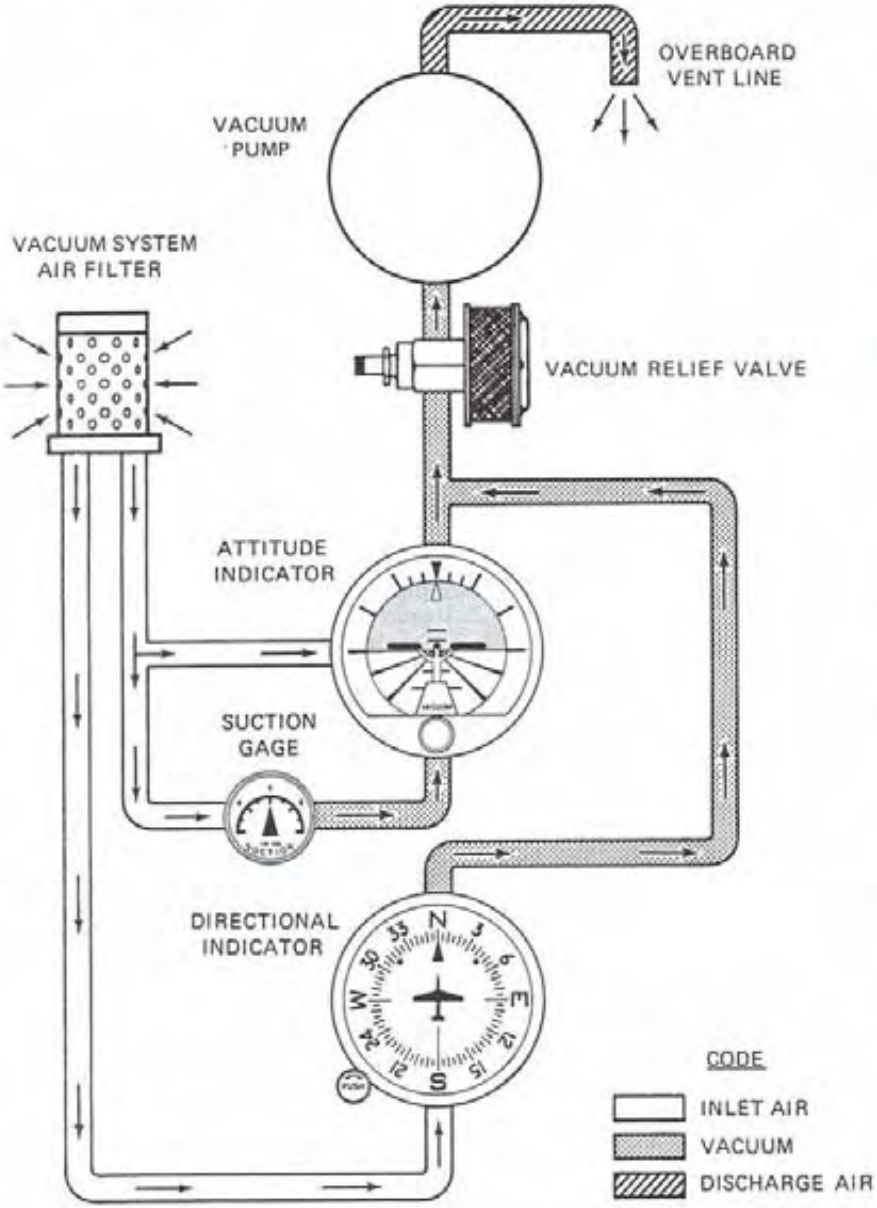

Figure 7-9. Vacuum System

For Flight Training Reference Only

provides the suction necessary to operate the attitude indicator and directional indicator. The system consists of a vacuum pump mounted on the engine, a vacuum relief valve and vacuum system air filter on the aft side of the firewall below the instrument panel, and instruments (including a suction gage) on the left side of the instrument panel.

ATTITUDE INDICATOR

An attitude indicator is available and gives a visual indication of flight attitude. Bank attitude is presented by a pointer at the top of the indicator relative to the bank scale which has index marks at 10°, 20°, 30°, 60°, and 90° either side of the center mark. Pitch and roll attitudes are presented by a miniature airplane superimposed over a symbolic horizon area divided into two sections by a white horizon bar. The upper "blue sky" area and the lower "ground" area have arbitrary pitch reference lines useful for pitch attitude control. A knob at the bottom of the instrument is provided for inflight adjustment of the miniature airplane to the horizon bar for a more accurate flight attitude indication.

DIRECTIONAL INDICATOR

A directional indicator is available and displays airplane heading on a compass card in relation to a fixed simulated airplane image and index. The directional indicator will precess slightly over a period of time. Therefore, the compass card should be set in accordance with the magnetic compass just prior to takeoff, and occasionally re-adjusted on extended flights. A knob on the lower left edge of the instrument is used to adjust the compass card to correct for any precession.

SUCTION GAGE

A suction gage is located on the left side of the instrument panel when the airplane is equipped with a vacuum system. Suction available for operation of the attitude indicator and directional indicator is shown by this gage, which is calibrated in inches of mercury. The desired suction range is 4.5 to 5.4 inches of mercury. A suction reading below this range may indicate a system malfunction or improper adjustment, and in this case, the indicators should not be considered reliable.

STALL WARNING SYSTEM

The airplane is equipped with a pneumatic-type stall warning system consisting of an inlet in the leading edge of the left wing, an air-operated horn near the upper left corner of the windshield, and associated plumbing. As the airplane approaches a stall, the low pressure on the upper surface of the wings moves forward around the leading edge of the wings. This low

For Flight Training Reference Only

pressure creates a differential pressure in the stall warning system which draws air through the warning horn, resulting in an audible warning at 5 to 10 knots above stall in all flight conditions.

The stall warning system should be checked during the preflight inspection by placing a clean handkerchief over the vent opening and applying suction. A sound from the warning horn will confirm that the system is operative.

AVIONICS SUPPORT EQUIPMENT

If the airplane is equipped with avionics, various avionics support equipment may also be installed. Equipment available includes two types of audio control panels, microphone-headset installations and control surface static dischargers. The following paragraphs discuss these items. Description and operation of radio equipment is covered in Section 9 of this handbook.

AUDIO CONTROL PANEL

Two types of audio control panels (see figure 7-10) are available for this airplane, depending upon whether the avionics package includes a marker beacon receiver. The operational features of both audio control panels are similar and are discussed in the following paragraphs.

TRANSMITTER SELECTOR SWITCH

When the avionics package includes two transmitters, a two-position toggle-type switch, labeled TRANS SELECT or XMTR (depending upon which audio control panel is installed), is provided to switch the microphone to the transmitter the pilot desires to use. The numbers 1 (up position) and 2 (down position) correspond to the first and second (from top to bottom) transmitters, respectively.

The action of selecting a particular transmitter using the transmitter selector switch simultaneously selects the audio amplifier associated with that transmitter to provide speaker audio. For example, if the number one transmitter is selected, the audio amplifier in the number one NAV/COM is also selected and is used for ALL speaker audio. In the event the audio amplifier in use fails, as evidenced by loss of all speaker audio, selecting the other transmitter will reestablish speaker audio using the other transmitter audio amplifier. Headset audio is not affected by audio amplifier operation.

For Flight Training Reference Only

USED WITHOUT MARKER BEACON

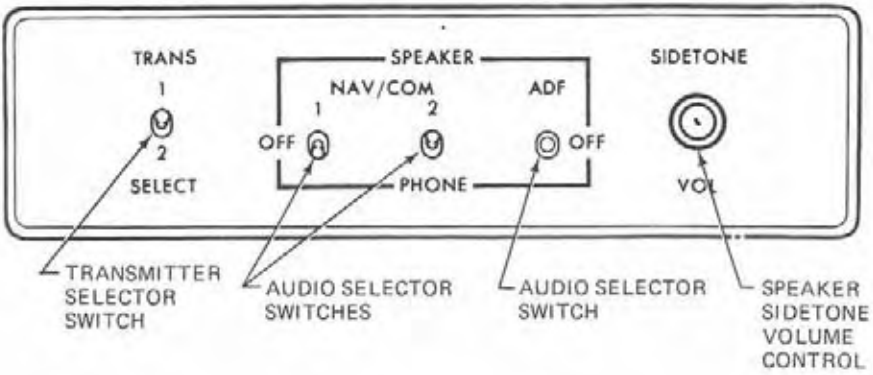

USED WITH MARKER BEACON

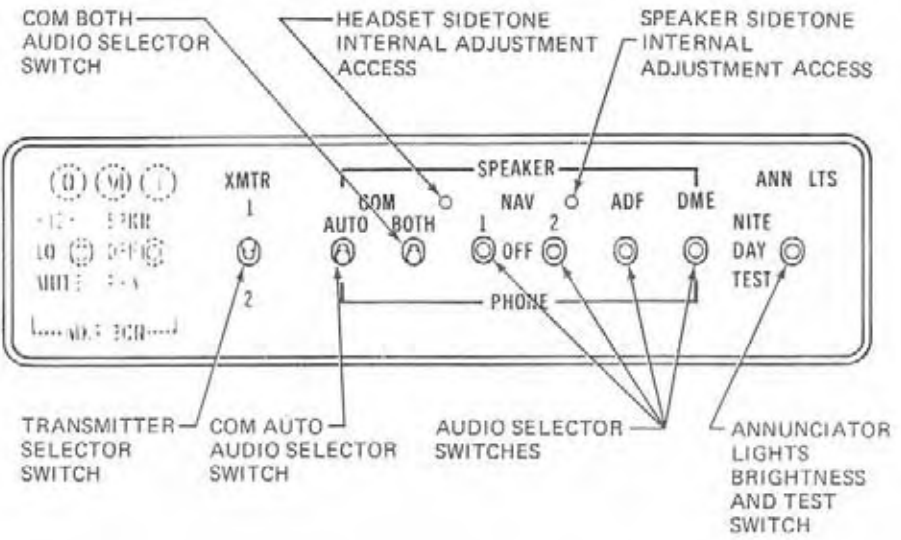

Figure 7-10. Audio Control Panel

For Flight Training Reference Only

AUDIO SELECTOR SWITCHES

Both audio control panels (see figure 7-10) incorporate three-position toggle-type audio selector switches for individual control of the audio from systems installed in the airplane. These switches allow receiver audio to be directed to the airplane speaker or to a headset, and heard singly or in combination with other receivers. To hear a particular receiver on the airplane speaker, place that receiver's audio selector switch in the up (SPEAKER) position. To listen to a receiver over the headset, place that receiver's audio selector switch in the down (PHONE) position. The center (OFF) position turns off all audio from the associated receiver.

NOTE

Volume level is adjusted using the individual receiver volume controls on each radio.

When a marker beacon receiver is not installed, audio from both NAV and COM frequencies is combined, and is selected by the audio selector switches labeled NAV/COM, 1 and 2.

A special feature of the audio control panel used with a marker beacon receiver is separate control of NAV and COM audio from the NAV/COM radios. With this installation, the audio selector switches labeled NAV, 1 and 2 select audio from the navigation receivers of the NAV/COM radios only. Communication receiver audio is selected by the switches labeled COM, AUTO and BOTH. Description and operation of these switches is described in later paragraphs.

COM AUTO AUDIO SELECTOR SWITCH

If the airplane is equipped with an audio control panel having marker beacon controls, a three-position toggle switch, labeled COM AUTO, is provided to automatically match the audio of the appropriate NAV/COM communications receiver to the transmitter selected by the transmitter selector switch. When the COM AUTO selector switch is placed in the up (SPEAKER) position, audio from the communications receiver selected by the transmitter selector switch will be heard on the airplane speaker. Switching the transmitter selector switch to the other transmitter automatically switches the other communications receiver audio to the speaker. This automatic audio switching feature may also be utilized when

For Flight Training Reference Only

listening on a headset by placing the COM AUTO switch in the down (PHONE) position. If automatic audio selection is not desired, the COM AUTO selector switch should be placed in the center (OFF) position.

COM BOTH AUDIO SELECTOR SWITCH

If the airplane is equipped with an audio control panel having marker beacon controls, a three-position toggle switch, labeled COM BOTH, is provided to allow both COM receivers to be monitored at the same time. For example, if the COM AUTO switch is in the SPEAKER position, with the transmitter selector switch in the number one transmitter position, number one communications receiver audio will be heard on the airplane speaker. If it is also desired to monitor the number two communications receiver audio without changing the position of the transmitter selector switch, place the COM BOTH selector switch in the up (SPEAKER) position so that the number two communications receiver audio will be heard in addition to the number one communications receiver audio. This feature can also be used when listening on a headset by placing the COM BOTH audio selector switch in the down (PHONE) position.

NOTE

The combination of placing the COM AUTO switch in the SPEAKER position and the COM BOTH switch in the PHONE position (or vice versa) is not normally recommended as it will cause audio from both communications receivers (and any other navigation receiver with its audio selector switch in the PHONE position) to be heard on **both** the airplane speaker and the headset simultaneously.

ANNUNCIATOR LIGHTS BRIGHTNESS AND TEST SWITCH

When a marker beacon receiver is installed, the audio control panel includes a three-position toggle-type switch to control the brightness level of the marker beacon indicator lights. When the switch is placed in the center (DAY) position, the indicator lights will show full bright. When this switch is placed in the up (NITE) position, the lights are set to a reduced level for typical night operations and can be further adjusted using the RADIO LT dimming rheostat knob. The down (TEST) position illuminates all lamps (except the ARC light in the NAV indicators) which are controlled by the switch to the full bright level to verify lamp operation.

SIDETONE OPERATION

Cessna radios are equipped with sidetone capability (monitoring of the operator's own voice transmission). While adjusting sidetone on either audio control panel, be aware that if the sidetone volume level is set too high, audio feedback (squeal) may result when transmitting.

For Flight Training Reference Only

On airplanes not equipped with marker beacon receivers, a control for speaker sidetone volume only is provided on the audio control panel. To adjust the level of the sidetone heard on the speaker, rotate the knob, labeled SIDETONE VOL, clockwise to increase volume or counterclockwise to decrease it. Sidetone provided through the headset is not adjustable by the pilot on audio control panels without marker beacon.

On airplanes with marker beacon receivers, sidetone is provided in both the speaker and headset anytime the COM AUTO selector switch is utilized. Placing the COM AUTO selector switch in the OFF position will eliminate sidetone. Sidetone internal adjustments are available to the pilot through the front of the audio control panel (see figure 7-10). Adjustment can be made by removing the appropriate plug-button from the audio control panel (left button for headset adjustment and right button for speaker adjustment), inserting a small screwdriver into the adjustment potentiometer and rotating it clockwise to increase the sidetone volume level.

MICROPHONE-HEADSET INSTALLATIONS

Three types of microphone-headset installations are offered. The standard system provided with avionics equipment includes a hand-held microphone and separate headset. The keying switch for this microphone is on the microphone. Two optional microphone-headset installations are also available; these feature a single-unit microphone-headset combination which permits the pilot to conduct radio communications without interrupting other control operations to handle a hand-held microphone. One microphone-headset combination is offered without a padded headset and the other version has a padded headset. The microphone-headset combinations utilize a remote keying switch located on the left grip of the pilot's control wheel. The microphone and headset jacks are located on the pedestal below the instrument panel. Audio to all three headsets is controlled by the individual audio selector switches and adjusted for volume level by using the selected receiver volume controls.

NOTE

When transmitting, the pilot should key the microphone, place the microphone as close as possible to the lips and speak directly into it.

STATIC DISCHARGERS

If frequent IFR flights are planned, installation of wick-type static dischargers is recommended to improve radio communications during flight through dust or various forms of precipitation (rain, snow or ice

For Flight Training Reference Only

crystals). Under these conditions, the build-up and discharge of static electricity from the trailing edges of the wings, rudder, elevator, propeller tips, and radio antennas can result in loss of usable radio signals on all communications and navigation radio equipment. Usually the ADF is first to be affected and VHF communication equipment is the last to be affected.

Installation of static dischargers reduces interference from precipitation static, but it is possible to encounter severe precipitation static conditions which might cause the loss of radio signals, even with static dischargers installed. Whenever possible, avoid known severe precipitation areas to prevent loss of dependable radio signals. If avoidance is impractical, minimize airspeed and anticipate temporary loss of radio signals while in these areas.

For Flight Training Reference Only