Overhaul Manual
Direct Drive Engine

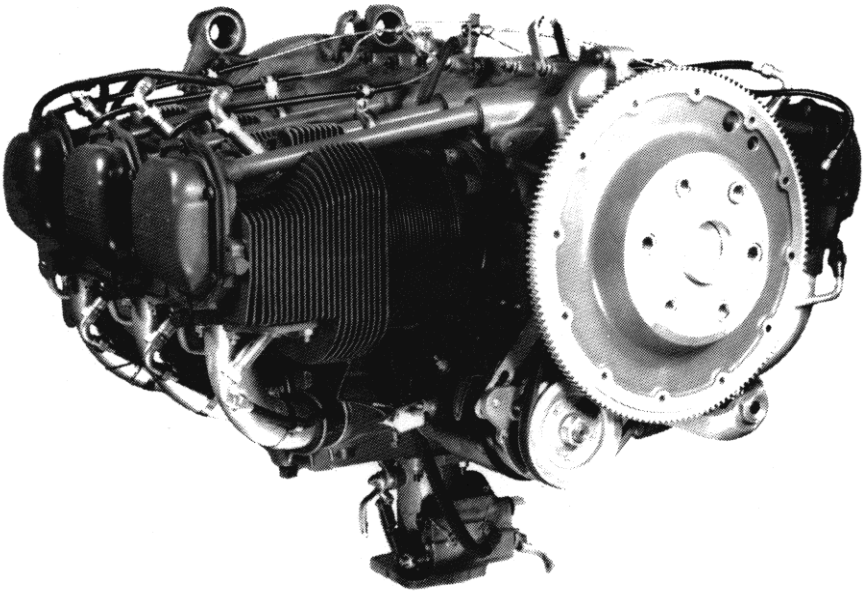

Approved by F.A.A.

Sixth Printing
December 1974

Part No. 60294-7

TEXTRON Lycoming

652 Oliver Street
Williamsport, PA 17701 U.S.A.

LYCOMING

TECHNICAL PUBLICATION REVISION

REVISION NO.	PUBLICATION	PUBLICATION NO.	PUBLICATION DATE
60294-7-13	**Direct Drive Overhaul Manual**	**60294-7**	**December 1974**

The page(s) in this revision replace, add to, or delete current pages of the publication indicated above.

PREVIOUS REVISION	CURRENT REVISION
April 1966 5-3, 5-6; 8-5 **July 1967** 5-8; 6-1 thru 6-18, 6-23, deleted pages 6-25 thru 6-32 **April 1968** 4-2 thru 4-8 **December 1968** Section 11 replaced Special Tool Catalog **January 1970** i, ii, deleted pages iv and v; 1-1, 1-2, deleted pages 1-3; 2-1 thru 2-6, deleted pages 2-7 thru 2-12; 3-1 thru 3-5; 4-1; 9-1, 9-2, 9-4, deleted page 9-7; 10-1 thru 10-36, deleted pages 10-37 thru 10-47 **January 1971** i, ii; 6-19 thru 6-24; 7-1 thru 7-19; 9-3, 9-5, 9-6 **May 1972** Added page 2-7; 3-1, 3-5; 5-1 thru 5-11, deleted pages 5-12, 5-13, 5-14; 6-1, 6-17, 6-18, 6-22, 6-23; 8-1 thru 8-6, deleted pages 8-7, 8-8; 9-3 **October 1973** i, ii, iii; 1-1; 3-3, 3-4, 3-5; 4-1, 4-3 thru 4-8; 5-1, 5-5, 5-6, 5-7, 5-9, 5-10; 6-2, 6-7, 6-10, 6-11, 6-12, 6-13, 6-17, 6-20, 6-21, 6-22, 6-23; 7-4, 7-16, 7-17, 7-18, 7-19; 9-1, 9-2 **February 1992** i **June 1993** 7-10, added pages 7-10A, 7-10B, 7-10C, 7-10D, 7-12, 7-12A/B **June 1996** i **June 1999** 7-4 **June 2002** 7-10B **January 2007** i, ii, iii, added page iv; 1-1, 1-2, 1-3; 7-4, added pages 7-4A, 7-4B; 7-5, 7-16, added pages 7-16A, 7-16B **September 2007** 7-15, 7-16, 7-16A, 7-16B **July 2008** 7-15, 7-16A	**October 2010** 6-15; 7-14

©2010 by Avco Corporation All Rights Reserved"
Lycoming Engines is a division of Avco Corporation, Avco Corporation is a wholly owned subsidiary of Textron, Inc..

OVERHAUL MANUAL – LYCOMING DIRECT DRIVE AIRCRAFT ENGINES

TO THE OWNER OF THIS MANUAL

IN ADDITION TO THIS MANUAL AND SUBSEQUENT REVISIONS, ADDITIONAL OVERHAUL AND REPAIR INFORMATION IS PUBLISHED IN THE FORM OF SERVICE BULLETINS AND SERVICE INSTRUCTIONS. THE INFORMATION CONTAINED IN THESE SERVICE BULLETINS AND SERVICE INSTRUCTIONS IS AN INTEGRAL PART OF, AND IS TO BE USED IN CONJUNCTION WITH, THE INFORMATION CONTAINED IN THIS OVERHAUL MANUAL.

THIS OVERHAUL MANUAL, THE ENGINE OPERATOR'S MANUAL, AND ALL APPLICABLE SERVICE BULLETINS AND INSTRUCTIONS ARE ISSUED IN COMPLIANCE WITH F.A.R 21.50, AND SHALL BE USED BY MAINTENANCE PERSONNEL WHEN PERFORMING ACTIONS SPECIFIED IN F.A.R 43.13.

For a period of three (3) years new and revised pages for this manual will be furnished to owners who fill out the registration card and return it to Lycoming. Registered owners of this manual will be notified of any changes in revision policy or cost of revisions.

Service Bulletins, Service Instructions and Service Letters are available from all Lycoming Distributors or from the factory by subscription. Consult the latest revision to Lycoming Service Letter No. L114. Lycoming also publishes an Index of Service Bulletins, Instructions and Letters that lists all Bulletins, Instructions and Letters in alphabetical order by title and top as well as a list of Bulletins, Instructions and Letters applicable to each engine series. Consult the Service Publication Section of the latest revision to Service Letter No. L114 for the current part number of the index.

SPECIAL NOTE

The illustrations, pictures and drawings shown in this publication are typical of the subject matter they portray; in no instance are they to be interpreted as examples of any specific engine, equipment or part thereof.

TABLE OF CONTENTS

SECTION PAGE

1 INTRODUCTION 1-1

2 GENERAL DESCRIPTION

Cylinders 2-1
Valve Operating Mechanism 2-1
Hydraulic Tappets 2-2
Crankcase 2-3
Crankshaft 2-3
Crankshaft Counterweights 2-3
Accessory Housing 2-3
Connecting Rods 2-3
Pistons 2-3
Lubrication System 2-3
Cooling System 2-4
Induction System
Carbureted 2-6
Fuel Injected 2-6
Turbocharger Controls 2-6
Ignition System 2-6

3 GENERAL OVERHAUL PROCEDURES

General 3-1
Cleaning
Degreasing 3-1
Removal of Hard Carbon 3-1
Inspection
General 3-2
Bearing Surfaces 3-2
Gears 3-2
Corrosion 3-2
Screwed Fittings 3-2
Magnetic 3-2
Corrosion Prevention 3-3
Repair and Replacement
Damaged Parts 3-3
Painted Parts 3-3
Replacement of Studs 3-3
Corrosion Prevention 3-3
Reassembly
Corrosion Prevention 3-3
Prelubrication of Parts 3-3
Oilite Bushings 3-4
Pitch Alignment and Backlash in Bevel Gear Assemblies 3-4
Table of Limits 3-5
Oil Seals and Gaskets 3-5
Arbitrary Replacement of Parts 3-5
Fuel Supply Lines 3-5

4 IGNITION SYSTEM

General 4-1
Magnetos
Impulse Coupling 4-1
Retard Breaker 4-1

SECTION PAGE

4 IGNITION SYSTEM (CONT.)

Engine Firing Order 4-1
Ignition Harnesses 4-1
Spark Plugs 4-1
Removal and Disassembly
Ignition Harness 4-1
Magnetos 4-1
Inspection
Ignition Harness 4-3
Magnetos 4-3
Repair and Replacement
Ignition Harness 4-3
Magnetos 4-4
Reassembly
Magnetos 4-5
Installation
Magnetos 4-5
Timing Magneto to Engine 4-5
Ignition Harness 4-8

5 ACCESSORY HOUSING

Disassembly 5-1
Cleaning 5-5
Inspection 5-5
Repair and Replacement 5-5
Reassembly 5-5
Dual Drives 5-9
Fuel Pumps 5-10
Oil Filter 5-10
Oil Cooler Bypass Valve 5-10

6 CYLINDERS, PISTONS AND VALVE TRAIN

General 6-1
Removal from Engine 6-1
Disassembly 6-7
Cleaning 6-7
Inspection 6-7
Cylinders 6-8
Pistons 6-9
Valve Rockers 6-10
Push Rods 6-10
Valves 6-10
Hydraulic Tappets 6-11
Valve Springs 6-13
Modifications 6-13
Repair and Replacements 6-13
Spark Plug Inserts 6-14
Valve Seats 6-15
Valve Guides 6-17
Valve Rocker Thrust Washers 6-17
Valve Rocker Shaft Bushings 6-18
Plain Steel Cylinder Barrels 6-19

TABLE OF CONTENTS (CONT.)

SECTION PAGE

6 CYLINDER, PISTONS AND VALVE TRAIN (CONT.)

Nitrided Cylinder Barrels.....6-20
Chrome Plated Cylinder Barrels ..6-20
Valve Repair 6-20
Warped Exhaust Flanges.....6-20
Reassembly
Assembly 6-20
Assembly of Cylinders.....6-21
Installation of Pistons.....6-21
Installation of Cylinders.....6-21
Cylinder Head Fin Stabilizers 6-23
Cylinder Painting 6-24
Intercylinder Baffles 6-24

7 CRANKCASE, CRANKSHAFT AND RECIPROCATING PARTS

Removal of Accessories.....7-1
Disassembly
Starter Ring Gear Support.....7-1
Prop. Governor Oil Line 7-1
Crankcase.....7-1
Crankshaft.....7-1
Counterweights.....7-3
Sludge Tubes.....7-3
Cleaning
General.....7-3
Piston Cooling Oil Jets.....7-3
Inspection
Bearings 7-4
Crankcase
Visual.....7-4
Dimensional.....7-4
Crankshaft
Visual.....7-4
Magnetic Particle 7-4
"PID" Stamped 7-4A
Dimensional.....7-4A
Camshaft
Visual..... 7-4B
Dimensional..... 7-4B
Main Bearing Clearance..... 7-4B
Connecting Rods
Dimensional.....7-6
Parallelism Check 7-6
Squareness Check 7-6
Crankshaft Counterweight
Bushings 7-6
Piston Cooling Oil Jets.....7-6
Repair and Replacement
Crankshaft
Bearing Surfaces.....7-7
Straightening Flange.....7-7

SECTION PAGE

7 CRANKCASE, CRANKSHAFT AND RECIPROCATING PARTS (CONT.)

Oil Seal Surface..... 7-8
Counterweight Bushings 7-9
Counterweight Bushings 7-10
Connecting Rod Bushings.....7-10
Crankshaft and Gear Assy. 7-10
Starter Ring Gear.....7-10C
Crankcase 7-10C
Oil Relief Valve Sleeve.....7-11
Oil Pressure Relief Valve.....7-12
Crankcase 7-12
Crankshaft Idle Gear Shaft
Recess 7-12
Reassembly
Crankshaft
Sludge Tubes.....7-12
Expansion Plug 7-12
Propeller Flange Bushings 7-12
Gear.....7-12
Counterweight Assy. 7-12A/B
Connecting Rods 7-14
Camshaft 7-14
Crankcase 7-15
Propeller Governor Drive.....7-15
Crankshaft Oil Seal 7-17
Hydro Control Valve.....7-17
Generator or Alternator Drive
Belt.....7-17
Crankshaft Idler Gears.....7-18

8 OIL SUMP AND FUEL INDUCTION

General 8-1
Disassembly
Intake Pipes 8-1
Carburetor or Fuel Injector..... 8-1
Induction Housing 8-1
Oil Sump 8-1
Cleaning
Oil Sump 8-1
Carburetor 8-1
Fuel Injector 8-1
Injector Nozzles..... 8-1
Inspection
Oil Sump 8-1
Carburetor 8-2
Fuel Injector 8-2
Nozzle Assembly..... 8-2
Repair and Replacement
Intake Pipes 8-3
Carburetor 8-3
Fuel Injector 8-3

TABLE OF CONTENTS (CONT.)

SECTION PAGE

8 OIL SUMP AND FUEL INDUCTION (CONT.)

Reassembly
Induction Housing.....8-4
Flow Dividers.....8-6
Intake Pipes.....8-6
Nozzle Assembly 8-6

9 TEST PROCEDURES

General 9-1
Test Limits 9-2
Turbocharged Engines.....9-3

SECTION PAGE

9 TEST PROCEDURES (CONT.)

Pressure Carburetors..... 9-3
Run-In Procedure..... 9-3
Run-In Schedule 9-3
Oil Consumption Run..... 9-4
Oil Pressure Relief Valve 9-4
Idle Speed and Mixture Adjustment 9-4
Preservation and Storage (Engine) 9-5
Preservation – Run..... 9-6
Preservation and Storage
Carburetors and Fuel Injectors 9-6

10 TABLE OF LIMITS

SECTION 1
INTRODUCTION

1-1. This manual contains the necessary information for the major overhaul of the Lycoming horizontally installed direct drive engines. Unless otherwise noted, all information and data in the manual will apply equally to all models; those portions of the text applying to any one particular model or series will be so identified.

1-2. The main portion of the text is divided into sections corresponding to the basic engine components. Additional sections are provided for general description, general overhaul, cleaning, inspection procedures, preservation and storage information, along with other items of a non-specific nature.

1-3. The tools required for overhauling the engines (excluding the ordinary mechanic's tools found in most overhaul shops) are listed in SSP-384, the Special Service Tools publication. Inspection gages are also listed in the same publication. Any special information required concerning tools may be obtained by writing to the Service Department, Lycoming Engines, 652 Oliver Street, Williamsport, Pennsylvania, 17701. When requesting information concerning any of these tools, refer to the tool by name and part number and not merely by name.

1-4. Parts Catalogs for specific models, may be ordered from the department listed in paragraph 1-3. Because this manual covers the entire series of engines, it is almost impossible to call out attaching parts for specific models. Therefore, it is required that the parts catalogs be used with the manual, when reassembling the engine.

1-5. The following procedure must be followed if warranty parts are to be returned to the factory. You may obtain from, but preferably have your distributor complete, the applicable warranty form. This form must include the engine models and serial numbers, number of hours in service, the reason for the parts being returned and any other pertinent facts concerning the parts.

1-6. In this manual all references to locations of various components will be designated when viewing the engine from the rear. The power take-off end is considered the front and the accessory drive end the rear. The oil sump is considered the bottom. Cylinders are numbered from front to rear with odd numbered cylinders on the right side. (The most forward cylinder is always designated the Number 1 cylinder.)

1-7. The direction of rotation of the crankshaft as viewed from the rear, is clockwise on all models with the following exception. The direction of rotation of the crankshaft, as viewed from the rear is counterclockwise on all models with the letter L in the model prefix. (Example – LTIO-540-J.) All references to direction of rotation of the various accessory drives are viewed facing the accessory drive mounting pad.

NOTE

In addition to this manual and subsequent revisions, additional overhaul and repair information is published in the form of Service Bulletins and Service Instructions. The information contained in these Service Bulletins and Service Instructions is an integral part of, and is to be used in conjunction with, the information contained in this overhaul manual. When received, these publications should be inserted in the rear of this manual or maintained in a separate file for ready reference.

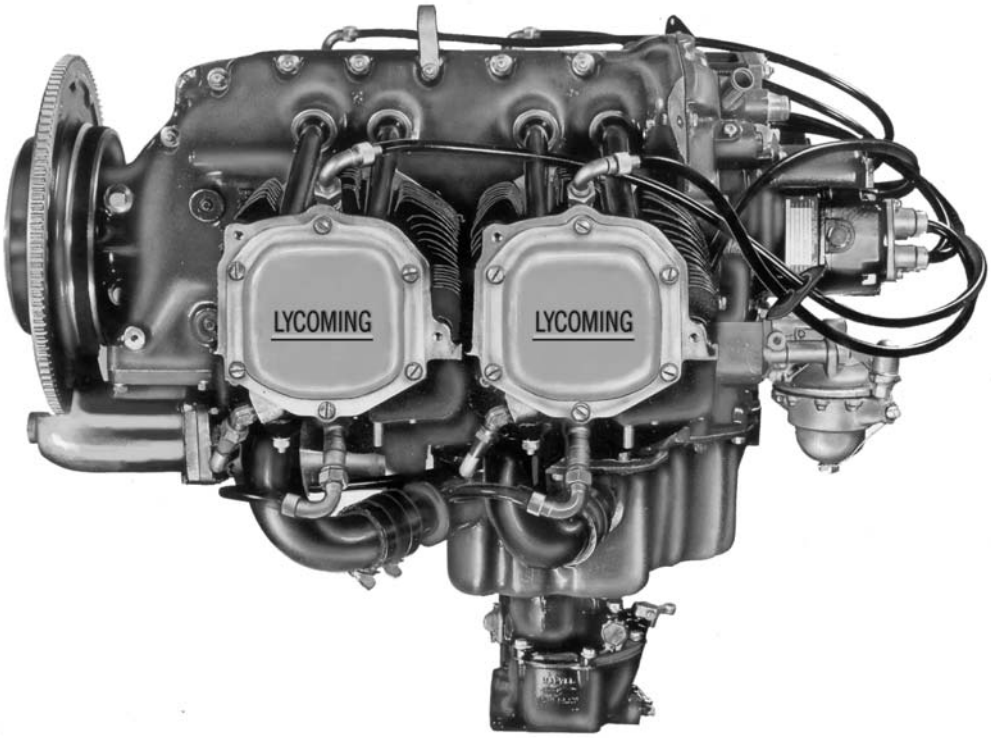

Figure 1-1. Typical 4 Cylinder Engine

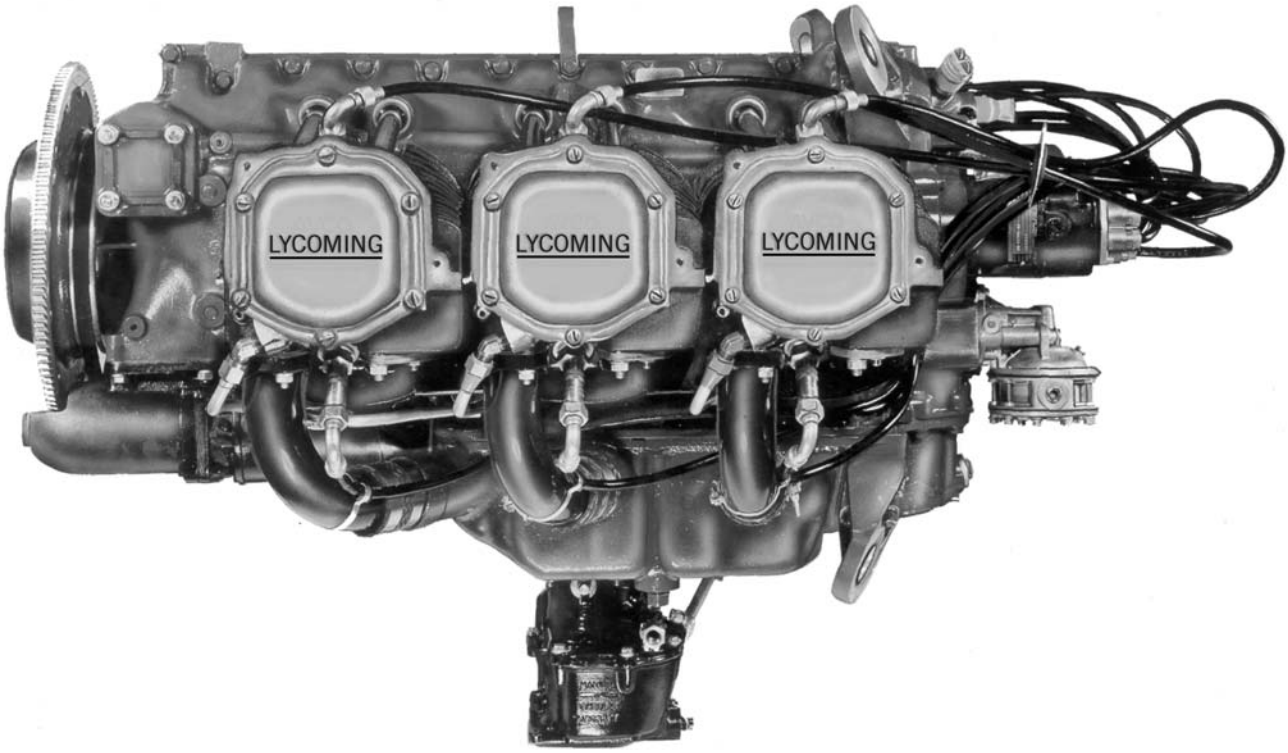

Figure 1-2. Typical 6 Cylinder Engine

Figure 1-3. Typical 8 Cylinder Engine

SECTION 2.
GENERAL DESCRIPTION

2-1. The engines covered in this manual are direct drive, four, six and eight cylinder, horizontally opposed, air cooled models.

2-2. CYLINDERS. The cylinders are of air cooled construction with the major parts, head and barrel, screwed and shrunk together. The heads are made from an aluminum alloy casting with a fully machined combustion chamber. Valve guides and valve seats are shrunk into machined recesses in the head. Rocker shaft bearing supports are cast integrally with the head along with the housings to form the rocker boxes for both exhaust and intake valve rockers.

2-3. The cylinder barrels are machined from a chrome nickel molybdenum steel forging with deep integral cooling fins. The interior of the barrels are ground and honed to a specified finish.

2-4. Avco Lycoming incorporates a color code painted on cylinder heads designating differences in the cylinder barrels and spark plug lengths. It is essential that personnel be familiar with this code as described in the latest edition of Service Instruction No. 1181.

2-5. Damage will result with the use of incorrect piston rings or spark plug lengths. The latest edition of Service Instruction No. 1037 lists the approved piston, piston ring and cylinder assemblies for all models while the latest edition of Service Instruction No. 1042 lists the approved spark plugs. Consult these publications for correct application to your particular installation.

2-6. VALVE OPERATING MECHANISM. A conventional camshaft is located above and parallel to the crankshaft. The camshaft actuates tappets which operate the

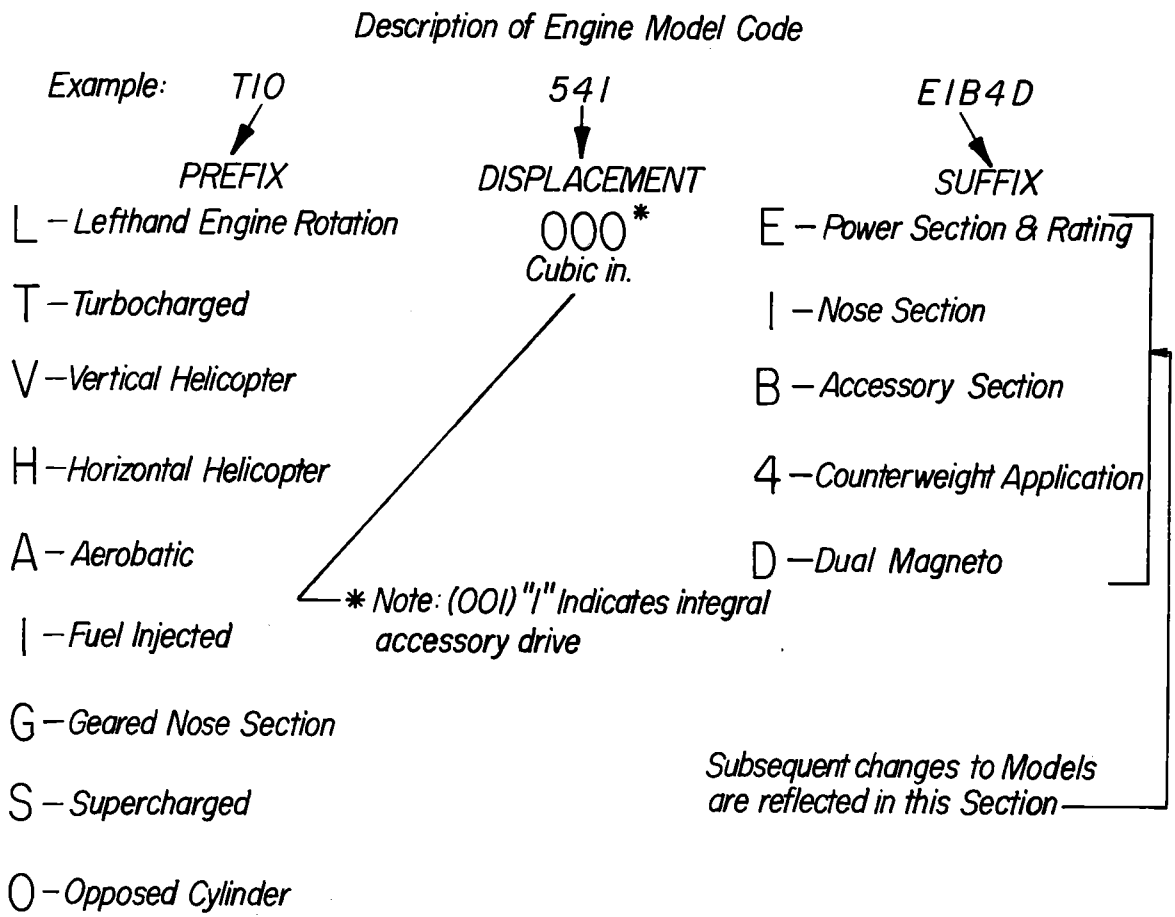

Figure 2-1. Description of Engine Model Code

valves through push rods and valve rockers. The valve rockers are supported on full floating steel shafts. The valve springs bear against hardened steel seats and are retained on the valve stems by means of split keys. A rotator cap is employed on sodium cooled exhaust valves.

NOTE

Hydraulic tappets, which automatically keep the valve clearance at zero, are used on all subject engines except the O-235-C and O-290-D series engines. These series employ solid tappets and the proper valve clearance is obtained with the aid of an adjusting screw located in the valve rocker.

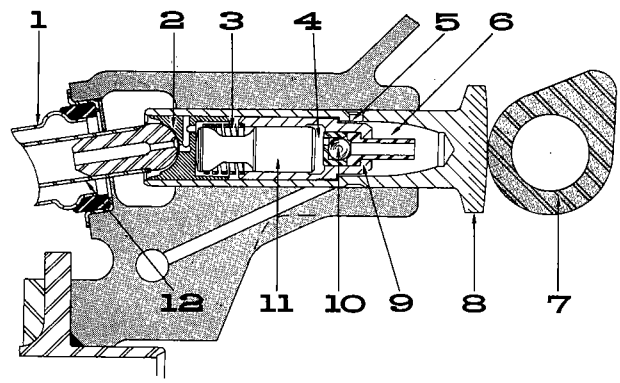

Figure 2-2. Hydraulic Tappet Assembly

2-7. HYDRAULIC TAPPETS. When the valve is closed, the face of the cam follower is on the base circle or back of the cam. The light plunger spring lifts the hydraulic plunger so that its outer end contacts the push rod, exerting a light pressure against it, thus eliminating any clearance in the valve linkage. As the plunger moves outward, the ball check valve moves off its seat. Oil from the supply chamber, which is directly connected to the engine lubrication system, flows in and fills the pressure chamber. As the camshaft rotates, the cam pushes the cam follower and the hy-

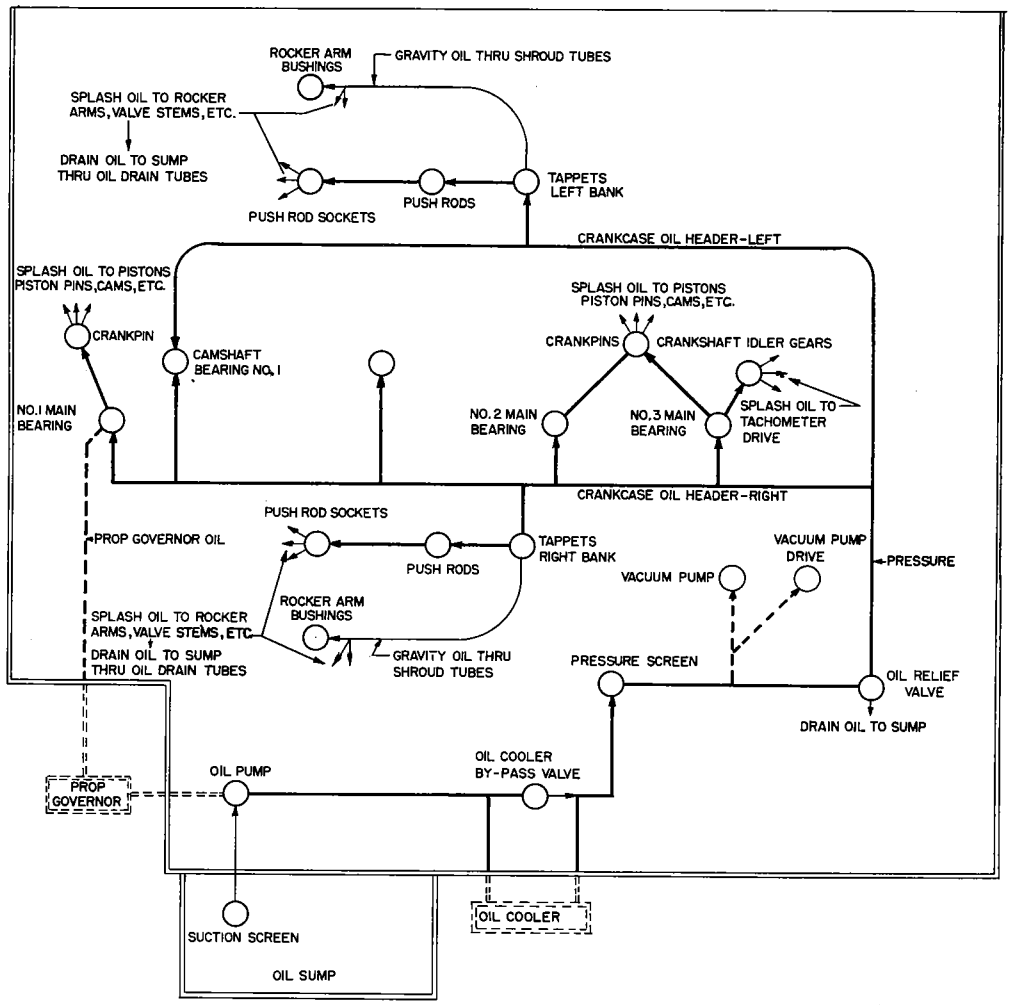

Figure 2-3. Lubrication Diagram - 4 Cylinder Engines

draulic lifter cylinder outward. This action forces the ball check valve onto its seat; thus, the body of oil trapped in the pressure chamber acts as a cushion. During the interval when the engine valve is off its seat, a predetermined leakage occurs between plunger and cylinder bore which compensates for any expansion or contraction occurring in the valve train. Immediately after the engine valve closes, the amount of oil required to fill the pressure chamber flows in from the supply chamber, thereby preparing for another cycle of operation.

2-8. CRANKCASE. The crankcase assembly consists of two reinforced aluminum alloy castings divided at the centerline of the engine and fastened together by a series of studs, bolts and nuts. The mating surfaces of the two castings are joined without the use of a gasket, and the main bearing bores are machined for the use of precision type main bearing inserts. The crankcase forms the bearings for the camshaft.

2-9. CRANKSHAFT. The crankshaft is made from a chrome nickel molybdenum steel forging and all journal surfaces are nitrided. Earlier models were provided with sludge tubes at each crankpin. These sludge tubes are not incorporated in later models. This is not to imply that sludge tubes may be removed and not replaced in crankshafts originally manufactured with sludge tubes. These tubes must be removed and replaced at overhaul.

2-10. CRANKSHAFT COUNTERWEIGHTS. A system of dynamic counterweights, to eliminate torsional vibration, is provided on all six and eight cylinder and some four cylinder engines. Consult the latest edition of Service Instruction No. 1012 for proper combination and location on the crankshaft.

2-11. ACCESSORY HOUSING. The accessory housing is machined from an aluminum alloy casting and is fastened to the rear of the crankcase and the top of the oil sump. Accessories are mounted on machined pads located on the rear of the housing.

2-12. CONNECTING RODS. The connecting rods are made in the form of "H" sections from alloy steel forgings. They have replaceable bearing inserts in the crankshaft ends and split type bronze bushings in the piston ends. The bearing caps on the crankshaft end of the rods are retained by two bolts through each cap secured by a crimp nut.

2-13. PISTONS. The pistons are machined from an aluminum alloy forging. The piston pin is of the full floating type with a plug located in each end of the pin. Consult Service Instruction No. 1037 for proper piston and ring combinations.

2-14. LUBRICATION SYSTEM. All subject engines, with the exception of the AIO series, employ a full

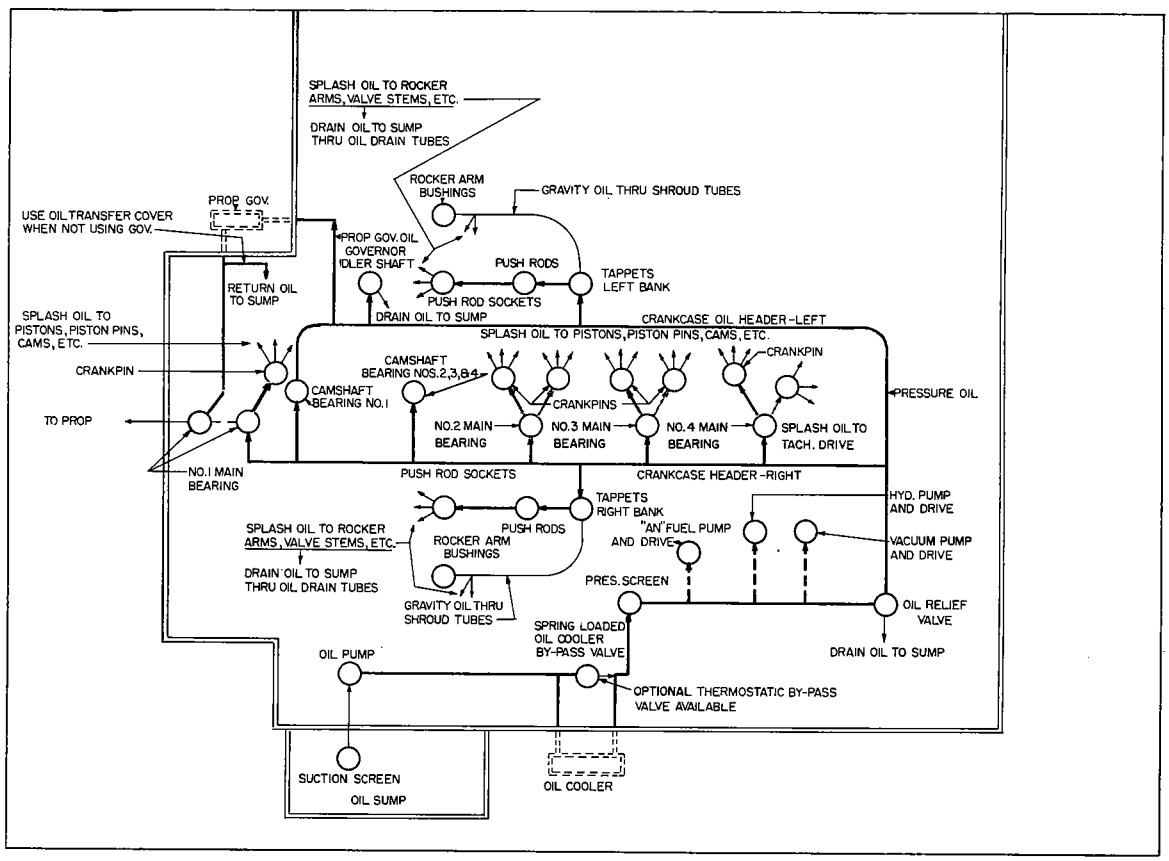

Figure 2-4. Lubrication Diagram - 6 Cylinder Engines

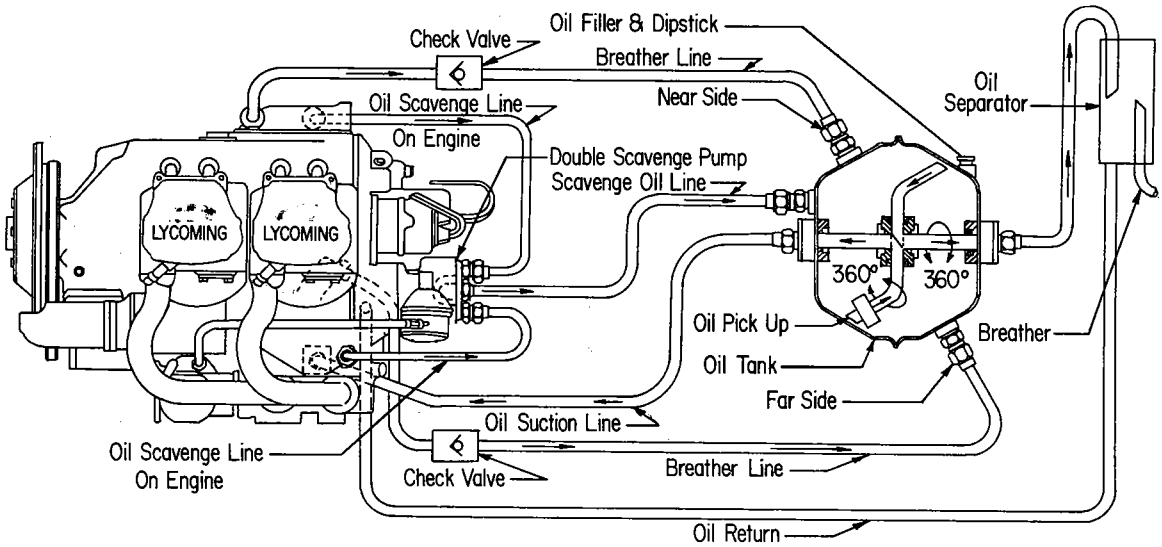

Figure 2-5. Schematic Oil System - AIO-320 and AIO-360

pressure wet sump lubrication system. See figures 2-3 and 2-4 for diagrams of typical four and six cylinder lubrication systems. See figure 2-5 for schematic of the oil system of the AIO series.

2-15. COOLING SYSTEM. These engines are designed to be cooled by air pressure built up on one side of the cylinder and discharged, with accompanying pressure drop, through the cylinder fins.

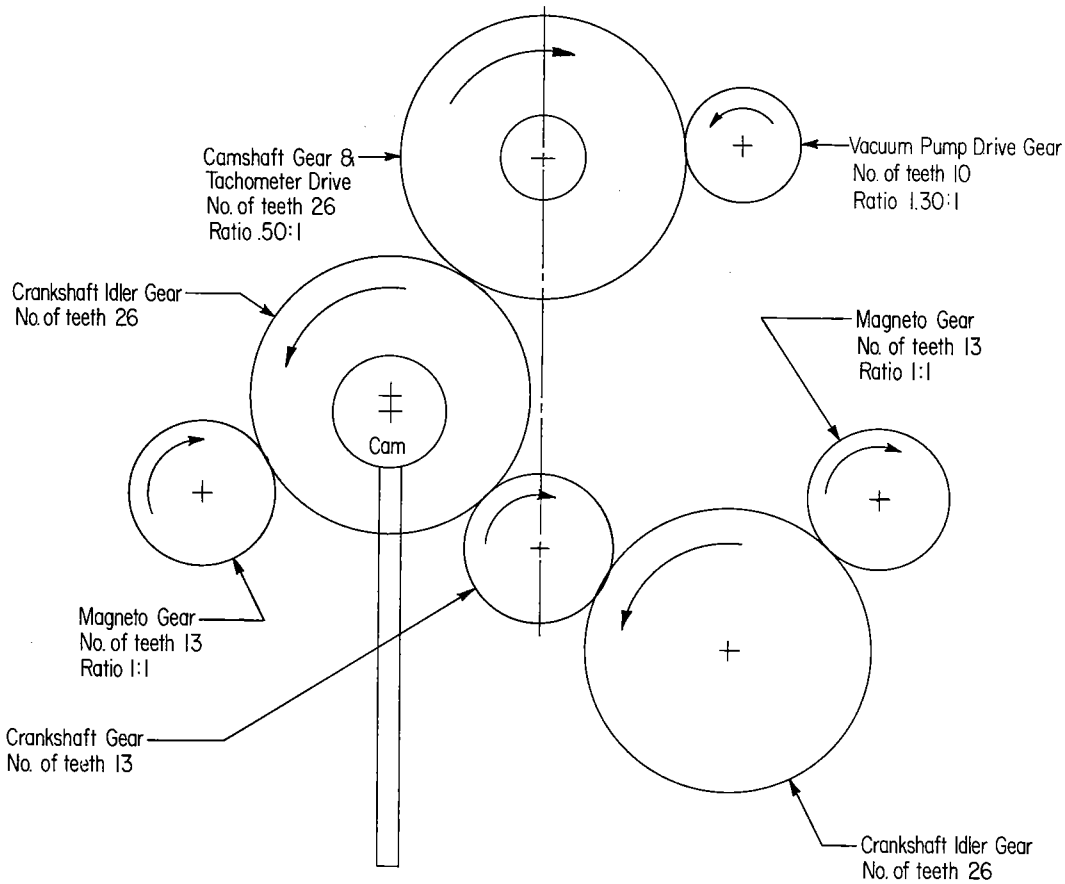

Figure 2-6. Gear Train Diagram - O-235, O-290-D and O-290-D2 Series

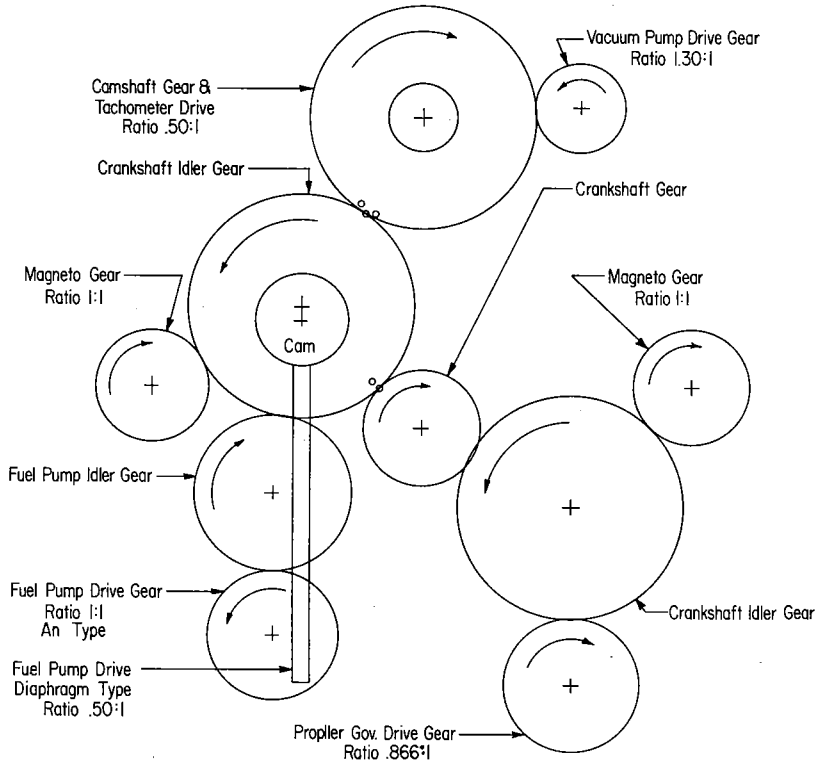

Figure 2-7. Gear Train Diagram - Typical 4 Cylinder Engine

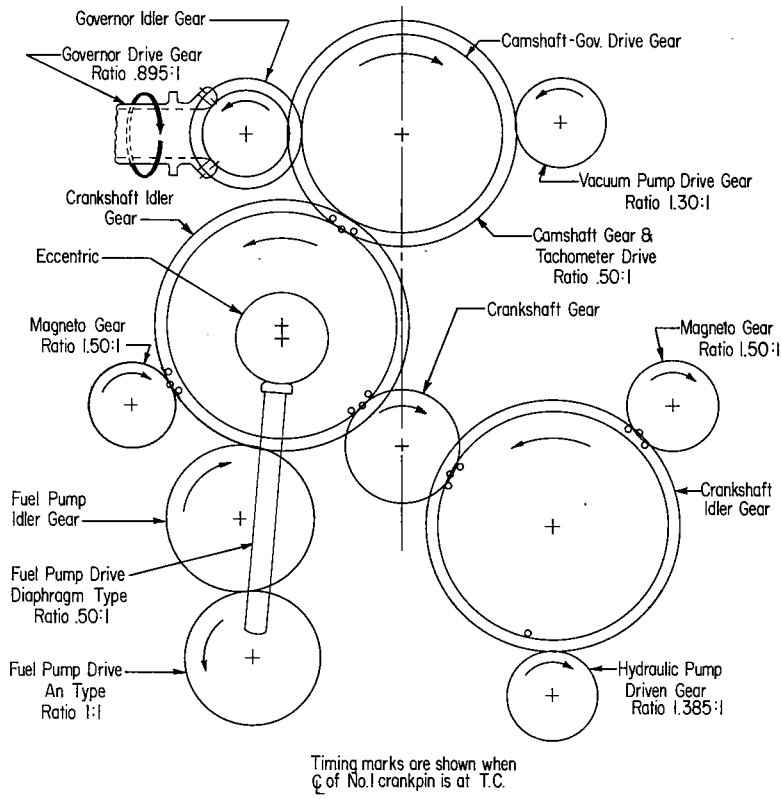

Figure 2-8. Gear Train Diagram - Typical 6 Cylinder Engine

2-16. INDUCTION SYSTEM (Engines Employing Carburetors). Subject engines may be equipped with either a float type or pressure type carburetor. Particularly good distribution of the fuel-air mixture to each cylinder is obtained through the center zone induction system, which is integral with the oil sump and is submerged in oil, insuring a more uniform vaporization of fuel and aiding in cooling the oil in the sump. From the riser the fuel-air mixture is distributed to each cylinder by individual intake pipes.

2-17. INDUCTION SYSTEM (Engines Employing Fuel Injectors). The fuel injection system schedules fuel flow in proportion to airflow and vaporization takes place at the intake ports. In addition, on the TIO-360 and TIO-540 series, a turbocharger furnished as an integral part of the engine provides constant air density to the fuel injector inlet from sea level to critical altitude.

2-18. TURBOCHARGER CONTROLS. The turbocharger control system consists of three components, namely, the exhaust bypass valve (waste gate), the density controller and the differential pressure controller.

The position of the exhaust bypass valve establishes the amount of supercharging delivered to the engine. Increasing oil pressure closes the valve and increases power. Decreasing oil pressure opens the valve and decreases power.

The density controller regulates the oil pressure to the bypass valve while the engine is operating at wide open throttle and limits manifold pressure below critical altitude.

The differential pressure controller regulates the oil pressure to the bypass valve while the engine is operating at part throttle settings below critical altitude.

2-19. IGNITION SYSTEM. Dual ignition is furnished for all subject engines. Several combinations of magnetos and various ignition harnesses are employed. Consult the applicable parts catalog for your particular installation. Consult the latest edition of Service Instruction No. 1042 for a list of Avco Lycoming approved spark plugs.

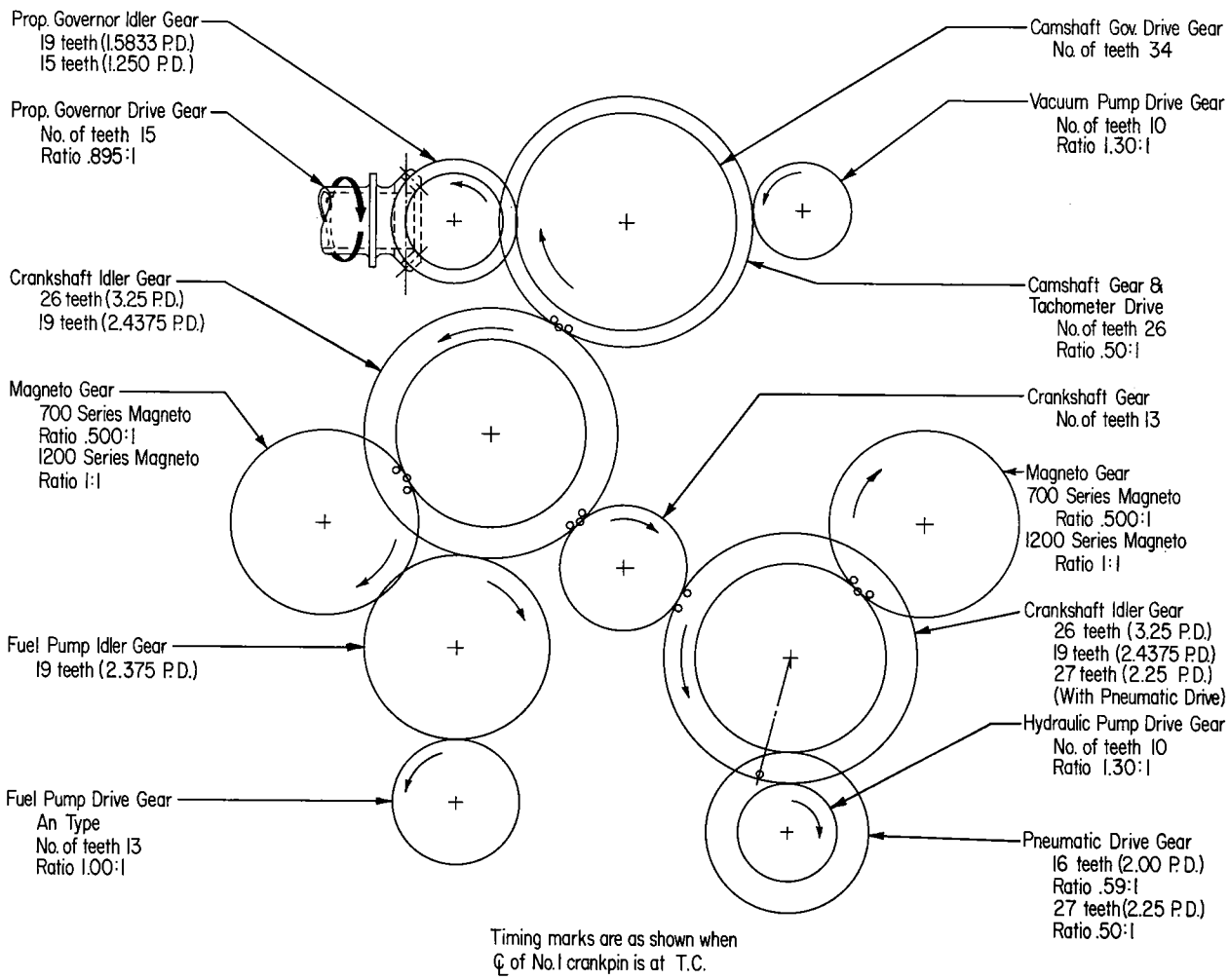

Figure 2-9. Gear Train Diagram - Typical 8 Cylinder Engine

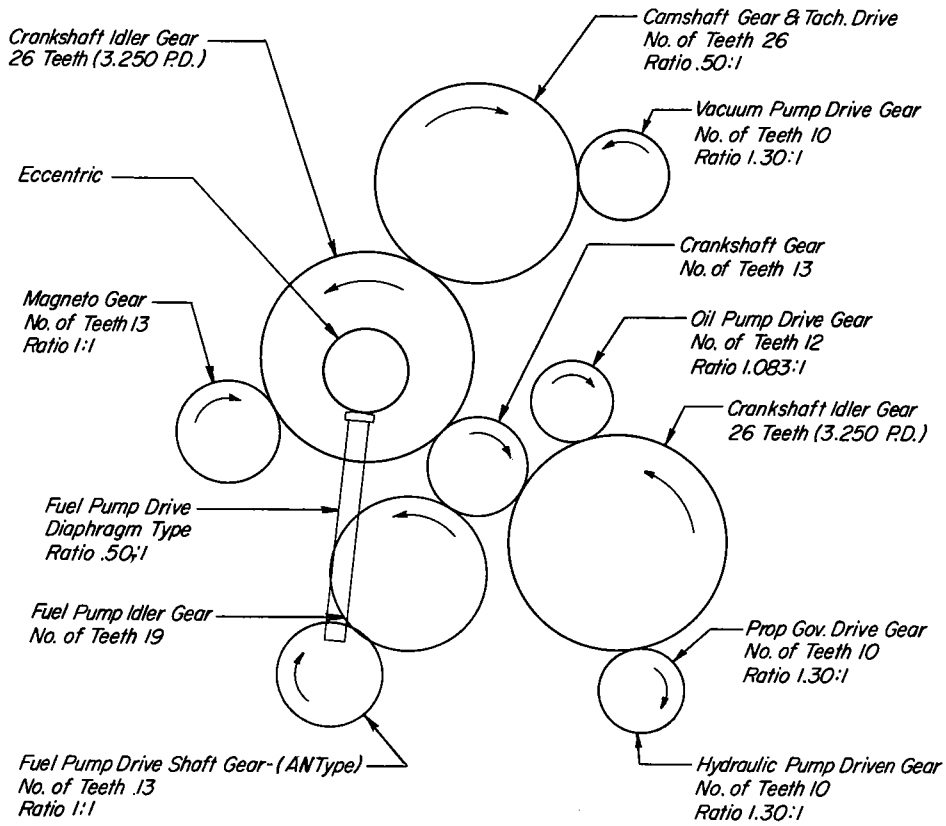

Figure 2-10. Gear Train Diagram - Typical 4 Cylinder (Dual Magneto Housing)

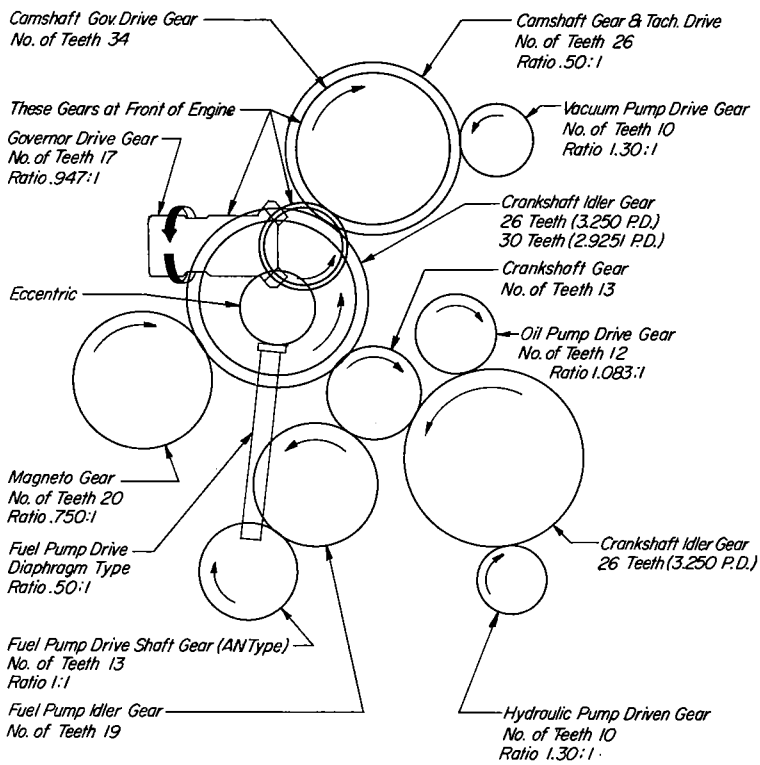

Figure 2-11. Gear Train Diagram - Typical 6 Cylinder (Dual Magneto Housing)

SECTION 3.
GENERAL OVERHAUL PROCEDURES

3-1. This manual will describe in separate sections the complete major overhaul procedures for each individual portion of the engine, thus dividing the manual for all practical purposes, into a series of individual handbooks dealing in turn with each component part. Since there are various overhaul practices and instructions of a non-specific nature, which apply equally to all basic engine components, these general instructions will be grouped together and described in this section, thus avoiding repetition.

3-2. No attempt shall be made to include overhaul procedures for the various trade accessories. These accessories are covered in overhaul manuals published by their respective manufacturer. Only such assembly and disassembly as required by engine installation will be covered.

3-3. Just prior to or immediately after removing the engine from the airframe, remove the oil drain plug and drain the oil from the engine.

3-4. Attach the engine lifting cable to the engine and remove from the airframe.

3-5. Place the skid (ST-278) in the overhaul stand (ST-162). Attach the engine overhaul adapter (ST-165) to the propeller flange and mount the assembly on the engine mounting ring.

3-6. Place the overhaul stand and skid into position and lower the engine to the stand and remove lifting cable. The engine is now in a position to be disassembled. Specific disassembly instructions are contained in the applicable section for each component.

3-7. Inasmuch as visual inspection should be made while disassembling and immediately after disassembly, all individual parts should be laid out in an orderly manner as they are removed from the engine. No cleaning operation should be performed until this initial visual inspection has been completed. All loose studs, cracked cooling fins, loose or damaged fittings, and the like, should be carefully noted and tagged to prevent their being overlooked during regular inspection.

CLEANING

3-8. It is imperative to clean all engine parts thoroughly to facilitate inspection. Two processes are involved in cleaning engine parts; degreasing to remove dirt and sludge (soft carbon) and the removal of hard carbon by decarbonizing, brushing or scraping and grit-blasting.

3-9. DEGREASING. Degreasing is accomplished by immersing or spraying the part in solution of white furnace oil (38-40 specific gravity) or a suitable commercial solvent such as Varsol or Perm-A-Chlor. Operators are warned against the use of solvents with which they are unfamiliar, since there are many products on the market which are injurious to aluminum and magnesium. Extreme care must be exercised if any water-mixed degreasing solutions containing caustic compounds or soap are used. Such compounds, in addition to being potentially dangerous to aluminum and magnesium, may become impregnated in the pores of the metal and cause oil foaming when the engine is returned to service. When using water-mixed solutions therefore, it is imperative that the parts be completely and thoroughly rinsed in clean boiling water after degreasing. Regardless of the method and type of solution used, coat and spray all parts with lubricating oil immediately after cleaning in order to prevent corrosion.

3-10. REMOVAL OF HARD CARBON. While the degreasing solution will remove dirt, grease and soft carbon, deposits of hard carbon will almost invariably remain on many interior surfaces. To facilitate removal, these deposits must first be loosened by immersion in a tank containing a decarbonizing solution (usually heated). A great variety of commercial decarbonizing agents are available, including such products as Gunk, Penetrol, Carbrax, Super-Chemaco, Gerlach No. 70, and many others. Decarbonizers, like the degreasing solutions previously mentioned, fall generally into two catagories, water-soluble and hydrocarbons, and the same caution concerning the use of water-soluble d egreasers is applicable to water-soluble decarbonizers.

CAUTION

> Extreme caution should be exercised when using a decarbonizing solution on magnesium castings. It is recommended that the use of heated solutions be avoided unless the operator is thoroughly familiar with the particular solution being used. In addition, the operator is strongly advised against immersing steel and magnesium parts in the same decarbonizing tank, because this practice often results in damage to the magnesium parts from corrosion.

3-11. Decarbonizing will usually loosen most of the hard carbon deposits remaining after degreasing; the complete removal of all hard carbon, however, generally requires brushing, scraping or grit-blasting. All of these operations demand care on the part of the mechanic to avoid damage to machined surfaces. In particular, wire brushes and metal scrapers must never be used on any bearing or contact surface.

3-12. When grit-blasting parts do not use sand or any metallic abrasives. It is recommended instead that mildly abrasive organic substances such as rice, baked wheat, plastic pellets, or crushed walnut shells be used. All machined surfaces must, of course, be adequately masked and all openings tightly plugged before blasting. The one exception to this is the valve seats, which may be left unprotected when blasting the cylinder head combustion chamber. It is often advantageous to grit blast the seats, since this will cut the glaze which tends to form (particularly on the exhaust valve seat) thus facilitating subsequent valve seat reconditioning. Under no circumstances should the piston ring grooves be grit blasted. If necessary, soak the piston in petroleum solvent and scrape with a wooden scraper. When grit-blasting housings, plug all drilled oil passages with rubber plugs or other suitable material to prevent the entrances of foreign matter.

3-13. The decarbonizing solution will generally remove most of the enamel from exterior surfaces. All remaining enamel should be removed by grit-blasting particularly in the crevices between cylinder cooling fins.

3-14. At the conclusion of cleaning operations, rinse the parts in petroleum solvent, dry and remove any loose particles by air-blasting. Apply a liberal coating of preservative oil to all surfaces.

INSPECTION

3-15. The inspection of engine parts during overhaul is divided into three catagories, visual, structural and dimensional. The first two deal with the structural defects in parts while the third is concerned with the size, shape and fit.

3-16. Visual inspection should precede all other inspection procedures. Do not clean any parts prior to visual inspection, since indications of dangerous operating condition can often be detected from the residual deposits found in some particular recess of the engine.

3-17. Structural failures can be determined by several different methods depending on the part involved. The following are a few of the methods employed: magnetic particle, dye penetrant, penetrant, x-ray and various electronic methods.

3-18. Dimensional inspections should be carried out in accordance with the measurements and tolerances as called out in the Table of Limits (Section 10).

3-19. It is recommended that an inspection and overhaul form, containing a list of all engine components, be utilized when disassembling an engine. This form should be prepared so that all inspection and overhaul procedures can be checked off and remarks noted. This will also assure that no part is inadvertenly overlooked.

3-20. BEARING SURFACES. All bearing surfaces should be examined for scoring, galling and wear. Considerable scratching and light scoring of aluminum bearing surfaces in the engine will do no harm and should not be considered cause for rejection of the part, provided it falls within the clearances set forth in the Table of Limits. Even though the part may come within specified limits it should not be reassembled into the engine unless inspection shows it to be free of other serious defects. Ball bearings should be examined visually and by feel for roughness, flat spots, flaking or pitting of races and for scoring on the outside of the races. All journal surfaces should be checked for galling, scores, misalignment and out-of-round condition. Shafts, pins etc. should be checked for straightness. This may be done in most cases by using vee blocks and a dial indicator.

3-21. GEARS. All gears should be examined for evidence of pitting and excessive wear. These conditions are of particular importance when they occur on the involute of the teeth; deep pit marks in this area are sufficient cause to reject the gear. Bearing surfaces of all gears should be free from deep scratches. However, minor abrasions may be dressed out with a fine abrasive cloth.

3-22. CORROSION ON STRESSED AREAS. Pitted surfaces in highly stressed areas resulting from corrosion can cause ultimate failure of the part. The following areas should be carefully examined for evidence of such corrosion; interior surfaces of piston pins, the fillets at the edges of crankshaft main and crankpin journal surfaces, and thrust bearing races. If pitting exists on any of the surfaces mentioned to the extent that it cannot be removed by polishing with crocus cloth or other mild abrasive, the part must be rejected.

3-23. SCREWED FITTINGS. Screwed fittings (any parts such as threaded fastenings or plugs) should be inspected for condition of threads. Badly worn or mutilated threads must not be tolerated; the parts should be rejected. However, small defects such as slight nicks or burrs may be dressed out with a small file, fine abrasive cloth, or stone. If the part appears to be distorted, badly galled, or mutilated by overtightening, or from the use of improper tools, it must be replaced with a new one.

3-24. MAGNETIC INSPECTION. All ferro-magnetic steel parts should be inspected by the magnetic particle method. The successful detection of structural failure by magnetic inspection demands skill and experience on the part of operating personnel. It must be remembered that almost any fabricated steel part will show indications of some kind, and it is important that the operator exercise good judgment in evaluating the indications. Too rigid an interpretation may result in the rejection of a sound part, while on the other hand, a part showing a dangerous indication may be returned to service as a result of a too casual diagnosis. In general, areas of stress concentration must be watched closely for fatigue cracks. These areas include such locations as keyways, gear teeth, splines, roots of threads, small holes and fillets.

3-25. Proper judgment must also be used in determining the amount of current (amperage) applied; too little current will not sufficiently magnetize the part, while too heavy an application will permanently dam-

age the part by overheating and burning thin areas adjacent to the electrodes. Again, skill and experience on the part of the operator are of the utmost importance. Consult the latest edition of Service Instruction No. 1285 for proper amperage.

3-26. CORROSION-PREVENTION. Upon completion of inspection, coat all steel parts with preservative oil.

REPAIR AND REPLACEMENT

3-27. DAMAGED PARTS. Abnormal damage such as burrs, nicks, scratches, scoring, or galling should be removed with a fine oil stone, crocus cloth, or any similar abrasive substance. Following any repairs of this type, the part should be carefully cleaned in order to be certain that all abrasive has been removed and then checked with its mating part to assure that the clearances are not excessive. Flanged surfaces that are bent, warped, or nicked may be repaired by lapping to a true surface on a surface plate. Again the part should be cleaned to be certain that all abrasive has been removed. Defective threads can sometimes be repaired with a suitable die or tap. Small nicks can be removed satisfactorily with Swiss pattern files or small, edged stones, pipe tapped threads should not be tapped deeper in order to clean them up, because this practice will invariably result in an oversized tapped hole. If scratches or galling are removed from a bearing surface of a journal it should be buffed to a high finish. Generally it is impossible to repair cracks; however, welding operations may be performed in some parts of housings, providing the area is not a stressed section of the part. For example, almost any area of a rocker box may be welded, but no part of the cylinder head except the fins may be welded.

3-28. PAINTED PARTS. Parts requiring use of paint for protection or appearance should be painted in accordance with the following recommendations using material from the following list of approved materials. Thinner - Toluene or equivalent (AMS3180 or equivalent Federal Spec. TT-T-548). Primer - Zinc chromate (AMS3110 or equivalent MIL-P-8585). Enamel - Phthalate resin type (AMS3125C or equivalent MIL-E-7729).

NOTE

All machined bosses should be masked before painting. Do not paint areas under hold down nuts where torque is required.

3-29. Aluminum and Steel Parts. Parts shall be cleaned and degreased prior to painting. Apply one coat sinc chromate primer, thinned with approximately two parts toluene, and air dry. Apply one coat of enamel and bake at 250°F, to 300°F, for one-half hour. Enamel may be allowed to air dry but an inferior finish will result. Parts from which paint has not been removed may be repainted omitting the primer coat.

3-30. Magnesium Parts. Magnesium parts should be cleaned thoroughly with a dichromate treatment prior to painting. This treatment consists of cleaning all traces of oil and grease from the part by using a neutral, non-corrosive degreasing medium followed by a rinse. After which the part is immersed for 45 minutes in a hot dichromate solution (3/4 lb. of sodium dichromate to one gallon of water at 180°F. to 200°F., quantity as required). The part should be then washed thoroughly in cold running water, dipped in hot water and dried in an air blast. Immediately thereafter the part should be painted with a prime coat and engine enamel in the same manner as prescribed for aluminum parts.

3-31. Shroud Tubes. Shroud tubes should be thoroughly cleaned and dipped in zinc chromate primer thinned to spraying consistency. After the primer is dried the shroud tube should be painted on the outside with engine enamel.

3-32. All paint applied in the foregoing operations should preferably be sprayed; however, if it is necessary to use a brush, care should be exercised to avoid an accumulation of pockets of paint.

3-33. REPLACEMENT OF STUDS. Any studs which are bent, broken, damaged or loose, must be replaced. The method of removing studs depends on the type of stud and manner in which it is broken. The procedure for removing and replacing studs is as follows:

a. If there is sufficient thread area available on stud, use a collet grip tool consisting of a tapered collet that threads onto stud and a housing that slips over the collet. Tighten bolt on top of the housing and draw collet into housing to lock puller on the stud with a tight grip.

b. If the collet type tool cannot be used, drill a small hole into the stud. Employ a pilot bushing to guide drill into center of stud when stud is broken beneath the surface of the crankcase. Redrill the hole to enlarge it to accomodate the proper size extractor. Using the extractor, remove the stud.

c. After studs have been removed, check for size and condition of threads in stud holes to determine whether oversize studs must be used for replacement. Coat threads of studs with thread lubricant, Specification JAN-A-669, and drive stud to correct depth by using a suitable stud driver.

3-34. CORROSION-PREVENTION. At the conclusion of all repair operations and subsequent inspection, coat all steel parts with preservative oil.

REASSEMBLY

3-35. CORROSION-PREVENTION. Prior to assembly of subassemblies, all parts should be cleaned to remove all traces of preservative oil and accumulated foreign matter. During assembly, cover all steel parts with a heavy coat of preservative oil. This mixture should be used on all machined surfaces, especially on bearing surfaces, cylinder bores and piston rings. The practice of using plain lubricating oil during assembly is not recommended.

3-36. PRE-LUBRICATION OF PARTS PRIOR TO ASSEMBLY. Many premature failure of parts have been traced directly to improper pre-lubrication at engine

Figure 3-1. Bevel Gear - Showing Extreme Pitch Alignment

assembly. If parts are not properly lubricated, or an inferior lubricant is used, many of the engine parts will become scored before the engine oil goes through its first cycle and has had a chance to lubricate the engine. This, of course, will lead to premature parts failure prior to normal service life, and in some cases, lead to engine failure before normal service hours have been accumulated. It is of utmost importance, therefore, that the following recommendations be adhered to at engine assembly. Consult the latest edition of Service Instruction No. 1059.

3-37. Coat the camshaft lobes, face of tappet bodies and rocker tips with lubri-bond (a) or equivalent.

3-38. Coat the valve stems and the interior of the valve guides with Texaco Molytex "O" or equivalent.

3-39. All other parts should be coated with a mixture of 15% pre-lubricant (STP or equivalent) and 85% SAE No. 50 mineral base aviation grade lubricating oil.

3-40. OILITE BUSHINGS. During overhaul cleaning operations it is possible to wash the oil from these bushings; also, if a bushing has been replaced and either reamed or broached, its porosity may be affected. Therefore, before the bushings are reassembled into the engine they must be impregnated by immersing them for at least fifteen minutes in engine oil that has been heated to 140°F.

3-41. PITCH ALIGNMENT AND BACKLASH IN BEVEL GEAR ASSEMBLIES. During disassembly of engines returned to our factory, inspection personnel occasionally find evidence of incorrectly assembled gears. This condition appears to be wholly confined to bevel gear assemblies wherein one of the gears has been replaced; that is, instances where a comparatively new bevel gear is meshed with an older worn gear. An exaggerated example of this sort is shown in figure 3-1. Note that the edges of the gear are not even; the one gear is too far forward on its longitudinal axis.

3-42. During manufacture of bevel gears, the relationship between the edges of the gear (or tooth length) is carefully controlled. Because of this relationship, the correct location of the interlocking teeth (pitch alignment) of the two bevel gears can be maintained if the mating edges of the gears are even.

3-43. In Avco Lycoming aircraft engines where bevel gears are employed, the gear mountings are similar to the arrangement shown in figure 3-2. That is, a laminated shim is usually provided between the mounting adapter and the housing thus permitting each gear to be moved in either direction, along its longitudinal axis.

3-44. Designs such as this not only provide a means of obtaining correct backlash between the mating gears but also permit adjustment to correct pitch alignment, by correcting uneveness of the edges of the gears. The following procedure is suggested for obtaining both backlash and pitch alignment during assembly of the bevel gears.

a. Assemble each gear and its associated parts in its housing using such gaskets and shims as are specified by the applicable parts catalog. Secure the gear mountings temporarily.

b. Remove or add shim laminations as required to obtain correct backlash.

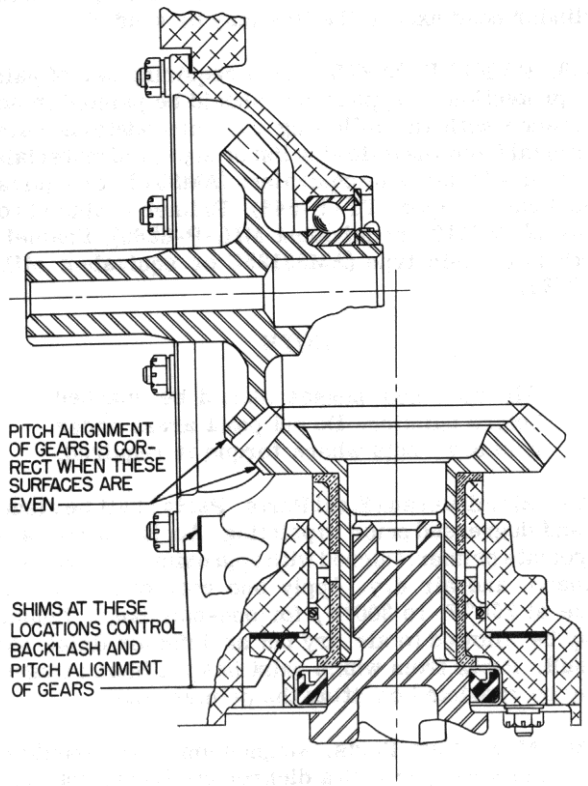

Figure 3-2. Typical Mounting for Support Bevel Gears

c. Visually, and by feel, determine if the edges of the mating gears are even. If the edge of one gear protrudes beyond the edge of the other, remove shims from the protruding gear and add shims of equal thickness to the other gear to achieve pitch alignment of the gears.

NOTE

It is possible to perform step (c) prior to step (b); that is, pitch alignment can be corrected before adjustment for backlash is made provided these precepts are observed. The removal or addition of an equal amount of shim material from both gear mountings will change backlash but not pitch alignment. The removal or addition of shim material from one gear only will change backlash and pitch alignment and the removal of shim material from one gear with the addition of an equal amount of shim material to the other gear will change pitch alignment but not backlash.

3-45. It is strongly recommended that all overhaul facilities adapt a firm policy of checking pitch alignment of bevel gears at the same time backlash is adjusted during engine overhaul.

3-46. TABLE OF LIMITS. The table of limits SSP-2070 should be consulted whenever it is desired to determine the backlash and end clearance of gears, the clearance between mating machined parts, the clearance between moving parts which are in close contact with each other and the torque limits for various nuts, screws and fastenings.

3-47. OIL SEALS AND GASKETS. When building up an engine during major overhaul, replace all oil seals and gaskets throughout the engine. For complete replacement sets of seals and gaskets available for these engines, consult applicable parts catalog.

3-48. ARBITRARY REPLACEMENT OF PARTS. It is recommended that certain parts throughout the engine be replaced at normal overhaul regardless of their apparent condition. Consult the latest edition of Service Bulletin No. 240 for information on the replacing of parts at overhaul. Included among these are the following:

- All engine oil hose
- All oil seals
- All gaskets
- All circlips, lockplates and retaining rings
- Piston rings
- All exhaust valves (except Inconel alloy valves)
- All exhaust valve retaining keys
- Crankshaft sludge tubes (where applicable)
- Cylinder fin stabilizers
- All bearing inserts (main and connecting rods)
- Magneto drive cushions
- Stressed bolts and fastenings
  - Camshaft gear attaching bolts
  - Connecting rod bolts and nuts
  - Crankshaft flange bolts
- Damaged Ignition cables
- All laminated shims
- Crankshaft counterweight bushings

3-49. FUEL SUPPLY LINES (Fuel Injected Engines) The fuel supply lines to the nozzles can become damaged and will leak if not properly installed and clamped at the correct locations. Consult Service Bulletins Nos. 335 and 342 for inspection procedures, configuration of lines and location of clamps, and Service Instruction No. 1301 for identification of fuel line.

SECTION 4.

IGNITION SYSTEM

4-1. GENERAL. All subject four, six and eight cylinder engines are equipped with high tension ignition systems which deliver high tension current directly to the spark plug outlets. Some eight cylinder engines are equipped with a low tension ignition system. This system carries the low tension current, produced by the magneto, through a lead to a transformer mounted on the magneto. The high tension current, produced by the transformer, is carried back through one outlet in the harness assembly to the magneto. The high tension current is then distributed, by the magneto distributor finger, to individual spark plug outlets.

4-2. MAGNETOS. Dual ignition is furnished by three types of magnetos on Avco Lycoming engines. (1) Conventional magneto, (2) impulse coupling magneto, and (3) retard breaker magneto. Either an impulse coupling or a retard breaker magneto is always used on the left side of the engine. A brief description of the impulse coupling magneto and the retard breaker magneto follows.

4-3. IMPULSE COUPLING MAGNETO. The purpose of the impulse coupling is: (1) To spin magnet (between impulse trips) faster than engine cranking speed, thus generating a better spark for starting; (2) automatically retard spark when starting engine. When engine is running, the impulse coupling acts as a drive coupling for the magneto.

4-4. RETARD BREAKER MAGNETO. The retard breaker magneto incorporated two sets of breaker points and provides a fixed retard and long duration boosted spark for easier starting. A source of DC power and a starting vibrator are required to complete the installation and it is recommended that the magneto manufacturer be contacted for information on the various vibrators and switching arrangements available. The -200, -700 and -1200 series magnetos incorporate an integral feed-thru capacitor and require no external noise filter in the magneto ground lead.

4-5. ENGINE FIRING ORDER. 4 cylinder engines (except LIO series) 1-3-2-4. LIO series 1-4-2-3. 6 cylinder engines, 1-4-5-2-3-6. LIO series 1-6-3-2-5-4. 8 cylinder engines, 1-5-8-3-2-6-7-4.

4-6. IGNITION HARNESSES. Ignition harnesses vary with the engine models; however, for purposes of description, all harnesses are composed of the same basic components. Basically, each lead is composed of a magneto terminal assembly, the ignition cable and the spark plug end assembly. The number of leads in the harness assembly is, of course, determined by the number of cylinders on the engine.

4-7. SPARK PLUGS. For information relative to approved spark plugs for the subject engines consult the latest revision of Service Instruction No. 1042 and Service Bulletin 359.

REMOVAL AND DISASSEMBLY

4-8. IGNITION HARNESS. Remove the terminals from the top and bottom spark plugs. Detach all clips, clamps and grommet plates securing the leads to the engine. Complete the removal of the harness by detaching the outlet plates from the magneto. Note that the Slick harness used on some engines is supplied as an assembly with the magneto and it will not be necessary to separate the two.

NOTE

Before detaching clamps, clips, grommet plates etc., mark the location of each. Differences in various installations make it impossible for this manual to point out the correct attaching points.

4-9. MAGNETOS. (Four Cylinder Engines). Loosen and remove the 5/16-18 nuts, washers (also clamps on Slick and -1200 series magnetos) which secure the magneto to the engine. See figure 4-1. Remove magneto and gasket (1) Note that an adapter (7) is used with the impulse coupling magneto. Remove this adapter and gasket (6). No further disassembly of the magneto is required other than the removal of the magneto gear (5) from the drive shaft. Replace the washer (4) and nut (3) to prevent damage to the drive shaft threads.

4-10. MAGNETOS. (Six Cylinder Engines). Loosen and remove the 5/16-18 nuts, washers and lockwashers (also clamps on -1200 series). See figure 4-1. Remove magnetos, gaskets (1), adapters (7) and gaskets (6). Reach inside the drive pad and remove drive cushions (11) magneto gear and cushion retainer (5) and ball bearing (12). Disassemble the nut (3) and bushing (10), (drive coupling (13) from conventional and retard breaker magnetos) and Woodruff keys (9) from the drive shaft.

NOTE

See Service Instruction 1252 for the conversion of 8 cylinder engine with -700 series magnetos to -1200 series magnetos engine.

4-11. MAGNETOS. (Eight Cylinder Engines). Loosen the 5/16-18 nuts and remove the nuts, lockwashers and clamps. Remove magnetos, gaskets (1), adapters (7) and gaskets (6). Reach inside the drive pad and remove the drive cushions (11), retainers (15), centering plates (16) and magneto gears (5). No disassembly of the -700 series magneto is required.

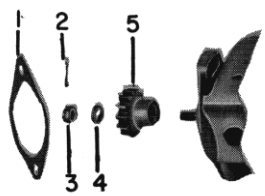

CONVENTIONAL AND RETARD BREAKER

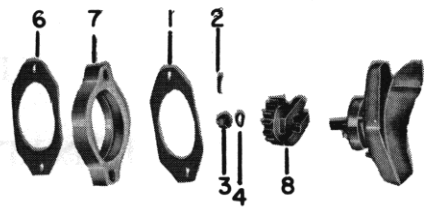

IMPULSE COUPLING

S4-20-200-1200 SERIES AND SLICK MAGNETO DRIVE ASSEMBLIES

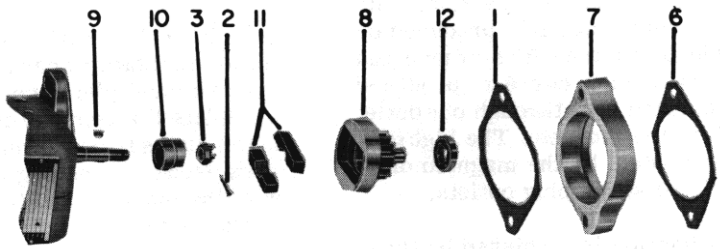

S6-20-1200 SERIES IMPULSE COUPLING MAGNETO DRIVE ASSEMBLIES

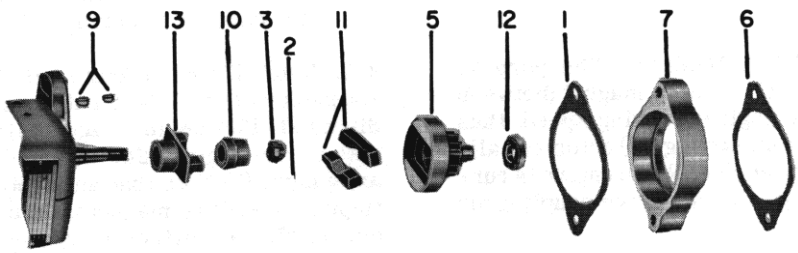

S6-20-200-1200 SERIES CONVENTIONAL AND RETARD BREAKER MAGNETO-DRIVE ASSEMBLIES

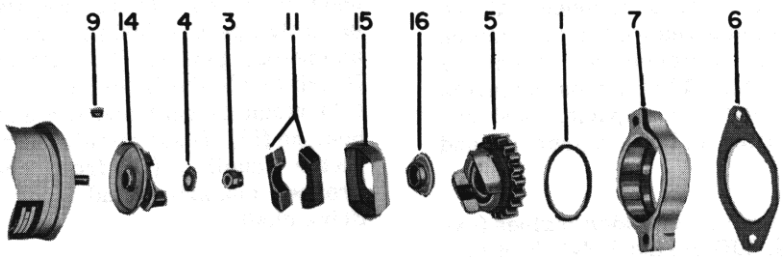

S8-700 SERIES MAGNETO DRIVE ASSEMBLIES

1. Magneto Gasket
2. Cotter Pin
3. Drive Shaft Nut
4. Washer
5. Magneto Gear
6. Adapter Gasket
7. Magneto Adapter
8. Impulse Coupling Gear
9. Woodruff Key
10. Bushing
11. Drive Cushions
12. Ball Bearing
13. Drive Coupling
14. Drive Plate
15. Cushion Retainer
16. Centering Plate

Figure 4-1. Magneto Drive Assemblies

NOTE

The gears mentioned in the preceding paragraphs are associated with and form a part of the accessory drives and should not be considered part of the ignition system. Their removal and reassembly is discussed in this section because they should be removed and reassembled at the times the magnetos are removed or reassembled.

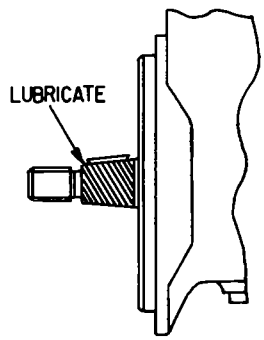

Figure 4-2. Location to Apply Compound

Slick) are given in detail in the latest editions of Service Instructions 1119 or 1153.

4-15. IGNITION HARNESS (Slick). Individual leads may be removed and new lead assemblies fabricated and installed in the following manner.

4-16. See figure 4-5. Remove the harness housing (5) from the magneto. Cut the cable with cutting pliers, close to the outside of the housing, and using a drift tap the ferrule (4) from the housing. Remove the spring (1) and electrode screw (2) from the lead by turning the spring counter-clockwise with a pulling action. Remove the sleeve (2). Remove the spark plug nut (7) from the cable and disassemble the spring (12) electrode screw (10) and sleeve (11) as described above. Discard the ferrules.

4-17. Cut the individual cable to the required length shown in Table 4-1. Make a mark 7/8" from the magneto end and 1" from the spark plug end. Flare out the copper shielding and insert the stripping tool (figure 4-6) beyond the mark. Do not allow the shielding to fold under while inserting tool. With a sharp knife, and using a rolling motion while cutting, cut and remove the copper shielding at the marks. Remove the stripping tool.

TABLE 4-1

LENGTH OF INDIVIDUAL CABLES
(Slick Harness)

Cylinder No. and Plug Location	Magneto No.	Cable Length (Inches)
1 Bottom	1 Right	32
3 Bottom	2 Right	24
2 Top	3 Right	38
4 Top	4 Right	32
1 Top	1 Left	41
3 Top	2 Left	34
2 Bottom	3 Left	32
4 Bottom	4 Left	25

INSPECTION

4-12. IGNITION HARNESS. Unless the harness assembly is in obviously new condition and is known to have been recently installed, it is recommended that the harness be replaced at overhaul.

4-13. MAGNETOS. As previously mentioned, this manual will not endeavor to describe overhaul procedures for trade accessories. Consult the manufacturer's applicable overhaul manual for inspection procedures.

REPAIR AND REPLACEMENT

4-14. IGNITION HARNESS. Although replacement of the ignition harness is recommended, it must be noted that many parts of the harness may be reused in fabricating a new assembly. Instructions for fabricating lead assemblies for all harnesses employed (except

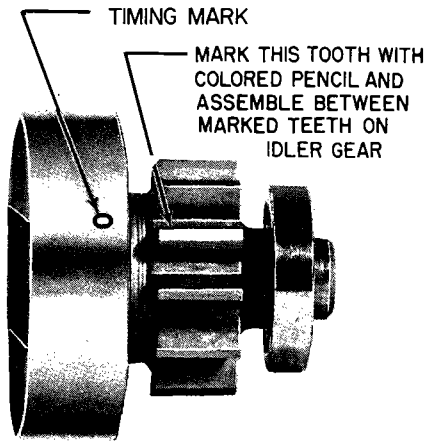

Figure 4-3. Magneto Gear Timing Mark

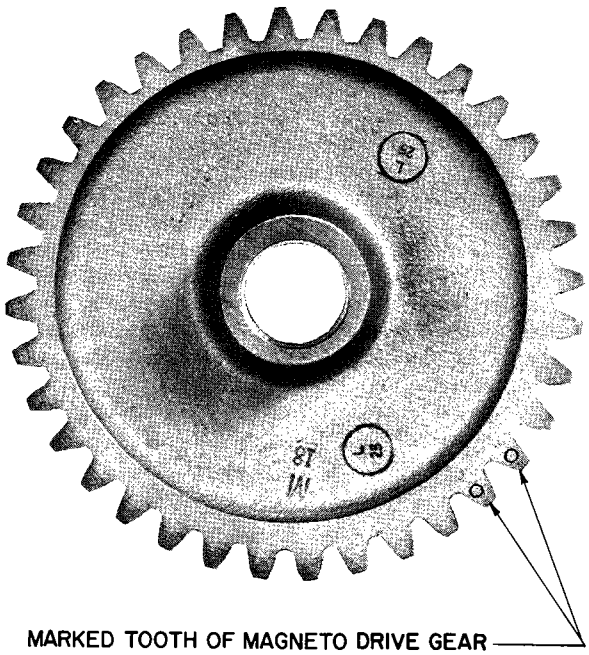

Figure 4-4. Marked Teeth on Crankshaft Idler Gear

4-18. At both ends cut the exposed insulation back from the end 1/16 inch. Do not pull insulation from wire, remove by turning clockwise. Trim the coiled conductor, conductor should protrude approximately two coils. Using the pin vise (figure 4-6) drill and remove silicone rubber from the inside of the coiled conductor, this will facilitate installation of the electrode screw in a later step.

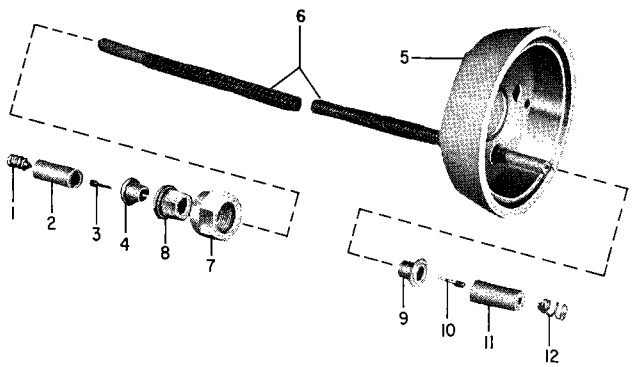

1. Spring
2. Sleeve (Insulator)
3. Electrode Screw
4. Drive Ferrule
5. Housing
6. Cable
7. Spark Plug Nut
8. Hex Ferrule
9. Drive Ferrule
10. Electrode Screw
11. Sleeve (Insulator)
12. Spring

Figure 4-5. Lead Assembly (Slick)

4-19. SPARK PLUG END. Install hex ferrule (8) over lead with flange end toward end of wire. After assembly of this ferrule, bend and rotate the silicone insulation to flare out the copper shielding. Install drive ferrule (9) over insulation and under shielding to within 1/16 inch of flange of hex ferrule. Slide hex ferrule over drive ferrule until tight. Mount drive plate (figure 4-6) in a bench vise. Set hex ferrule in slot of drive plate and, using the drive tool (figure 4-6) drive the drive ferrule flush against the hex ferrule. Install spark plug nut (7) on cable with threaded end toward ferrules.

4-20. MAGNETO END. Install lead through housing (5) and install drive ferrule (4) over insulation and under shielding. Place housing on drive plate and using drive tool, drive ferrule flush to housing.

4-21. BOTH ENDS. Clamp threaded end of electrode screw (3 and 10) in pin vise (figure 4-6) and assemble the screw into the center of the coiled conductor. Turn counter-clockwise and push the screw until the tapered pin portion is flush with the insulation. Place sleeve (2 and 11) over insulation and turn spring (1 and 12) onto electrode screw until the end of the screw is flush with the first large coil of the spring.

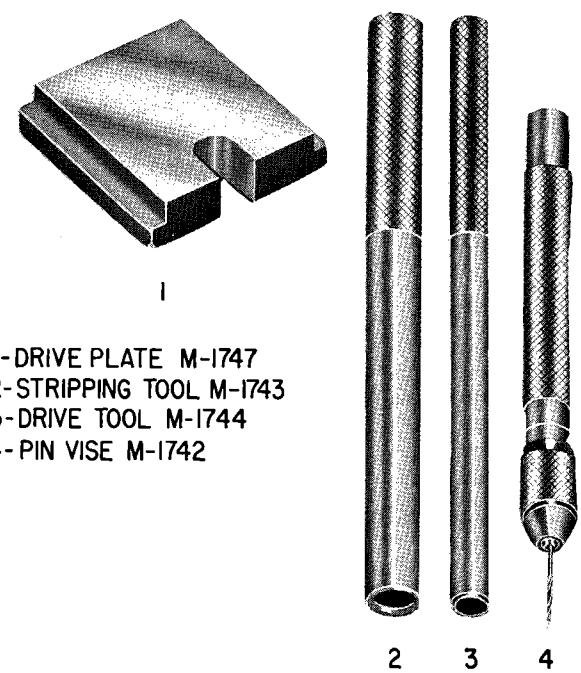

Figure 4-6. Tooling, Slick Harness

4-22. MAGNETOS. As previously mentioned, this overhaul manual will not endeavor to describe overhaul procedures for trade accessories. Consult the manufacturer's applicable manual for overhaul procedures. However, Avco Lycoming Service Bulletins Nos. 183A, 235A, 277, 311, 312, Service Instructions Nos. 1019, 1055, 1074, 1163, 1165 and Service Letters Nos. L122 and L134A, contain information relative to the magnetos covered in this manual. These publications should be consulted to ascertain if they affect your installation.

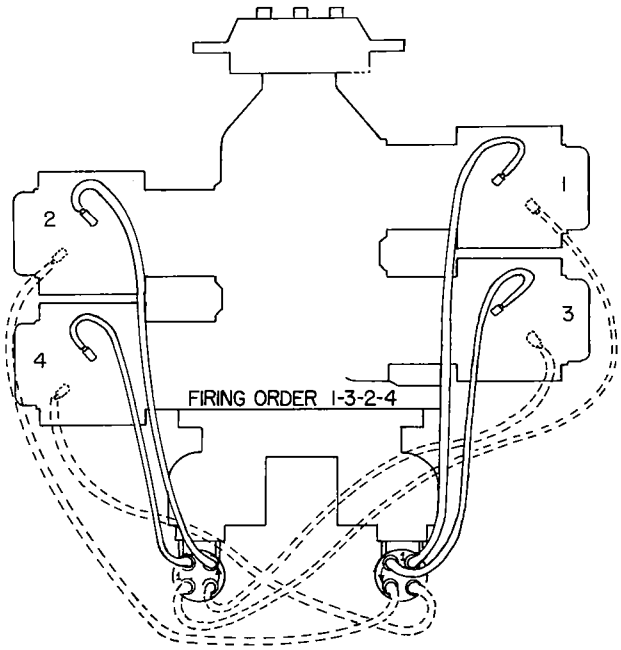

Figure 4-7. Ignition Wiring Diagram
Four Cylinder Engines

REASSEMBLY

4-23. MAGNETOS (All Engines). Before assembling the magneto gear or drive coupling (whichever is applicable) to the magneto drive shaft, apply a light coating of Go-Jo-No-Lox compound or equivalent to the tapered section of the magneto drive shaft. See figure 4-2. This compound is manufactured by Gojer, Inc. Akron 9, Ohio. After assembling gear or coupling, wipe excess compound from the drive shaft.

4-24. MAGNETOS (Four Cylinder Engines). See figure 4-1. Assemble a Woodruff key (9) in the shaft of the conventional or retard breaker magneto. Assemble the magneto gear (5) on the drive shaft, install the washer (4) and nut (3). Tighten to specified torque and secure with cotter pin (2).

4-25. MAGNETOS (Six Cylinder Engines). See figure 4-1. Assemble a Woodruff key (9) in the drive shaft of the conventional or retard breaker magneto and assemble the drive coupling (13) over the key. On all magnetos assemble the Woodruff key (9) and bushing (10) on shaft, install nut (3), tighten to specified torque and secure with cotter pin (2).

4-26. MAGNETOS (Eight Cylinder Engines). As the magneto drive plate was not removed at disassembly no reassembly is required.

INSTALLATION

4-27. MAGNETOS (Four Cylinder Engines). See figure 4-1. Assemble a gasket (1) on magneto mounting pads, note that when the magneto is of the impulse coupling type an additional gasket (6) and adapter (7) are required.

4-28. MAGNETOS (Six Cylinder Engines). See figure 4-1. Assemble a gasket (1), adapter (7) and gasket (6) on the magneto mounting pads. Assemble the ball bearing (12) on the magneto gear and retainer (5) and install the assemblies engaging the marked tooth of the magneto gear (See figure 4-3) between the two marked teeth on the crankshaft idler gear (See figure 4-4). Install the drive cushions (11) in the retainer.

NOTE

The magneto gear and retainer assemblies on engines employing two impulse coupling magnetos and TIO-540 engines use a different assembly on the left and right side. Consult parts catalog for correct part number.

4-29. MAGNETOS (Eight Cylinder Engines). See figure 4-1. Assemble a gasket (1), adapter (7) and gasket (6) on the magneto mounting pads. Assemble and centering plate (16) into the retainer (15) and assemble the drive cushions (11) around the centering plate. Install the magneto gear (5) and the above assemble meshing the magneto gear and the crankshaft idler gears as described for the six cylinder engines.

4-30. TIMING MAGNETO TO ENGINE. (Four, six and eight cylinder engines). Rotate the crankshaft in direction of normal rotation until No. 1 cylinder is on the compression stroke and approximately 35° BTC. Clamp the ignition timing pointer on the advance timing mark on the rear of the starter ring gear. The starter ring gear may be marked at 20° and 25°. Consult engine nameplate for correct advance timing mark to use. Continue rotating the crankshaft until the timing pointer and the parting flange of the crankcase align. Leave the crankshaft in this position until the magneto is installed.

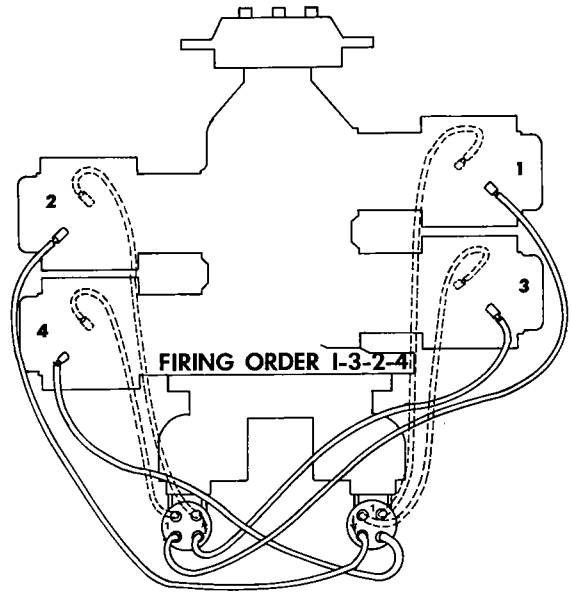

Figure 4-8. Ignition Wiring Diagram
Four Cylinder Engines - Optional

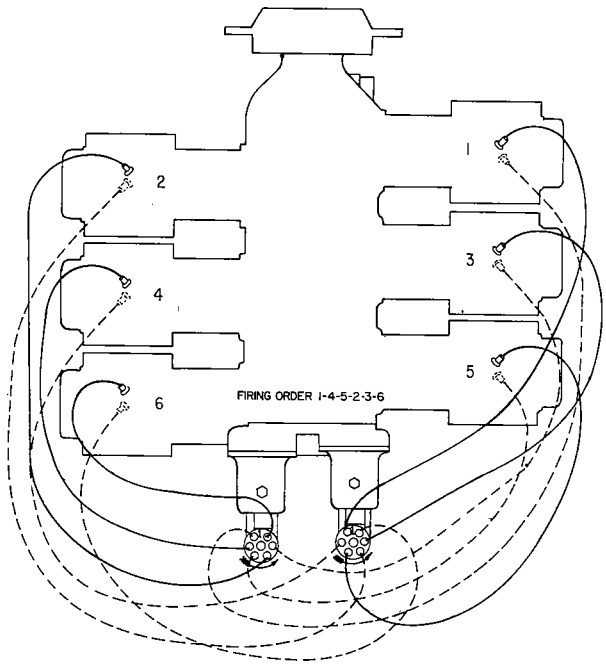

Figure 4-9. Ignition Wiring Diagram
Six Cylinder Engines

4-31. In the event that an ignition timing pointer is not available an alternate method may be used. Rotate the crankshaft in direction of normal rotation until No. 1 cylinder is on the compression stroke and continue rotating the crankshaft until the correct advance timing mark on the front of the starter ring gear is in exact alignment with the small drilled hole located at the two o'clock position on the front face of the starter housing. Leave the crankshaft in this position until the magneto is installed.

NOTE

The advance timing mark is specified on the engine nameplate.

4-32. (All magneto except S8 700 series). Remove the inspection plug from the magneto and rotate the drive shaft in direction of normal rotation until the painted chamfered tooth on the distributor gear is aligned in the center of the inspection window. The shaft on the impulse coupling magnetos can be turned by depressing the pawl on the coupling. Be sure the magneto gear does not move from this position and secure each magneto finger tight. The magnetos are now ready for final timing.

4-33. (Slick Magnetos) (Model 4-51, Impulse Coupling). Remove the bottom vent plug and "SPARK OUT" the magneto.

4-34. To "SPARK OUT" the magneto, hold the lead wire spring (with T1, or B1 on the spark plug nut) 1/16" to 1/8" away from the magneto frame, and turn the impulse coupling one (1) "click" at a time until a strong spark jumps between the spring and the magneto frams. You are to hold the magneto firmly so the coupling will not move beyond the point where it trips and the spark occurs. Reverse the rotation approximately 25° until the timing pin hole appears in the center of the vent plug hole.

4-35. Hold the rotor by inserting the timing pin, and line the timing pin with the center of the vent plug hole, and install the magneto on the engine.

4-36. For the Model 4050 magneto (without impulse), install the gear and hold the B1 lead 1/8" away from the frame.

4-37. Turn the gear counterclockwise (L. H.) vigorously through the flux lines until a strong spark occurs at this lead. Reverse the rotation into the flux until the timing pin hole appears. Insert the timing pin in the hole and install the magneto on the engine. The magnetos are now ready for final timing.

4-38. (S8-700 Series). Align the timing mark on the drive plate with the indent on the housing. See figure 4-12.

4-39. Hold the magneto in the above position and assemble it on the engine and tighten the mounting clamps sufficiently to hold the magneto in position yet permit it to be rotated.

4-40. FINAL TIMING (All Magnetos except the S8-700 series). Using a battery powered timing light, attach the positive lead to the ground or switch terminal (whichever is applicable) and the negative lead to any unpainted portion of the engine. Rotate the magneto in its mounting flange to a point where the light comes on, then slowly turn it in the opposite direction until the light goes out. Bring the magneto back slowly until the light just comes on. Repeat this procedure with the second magneto.

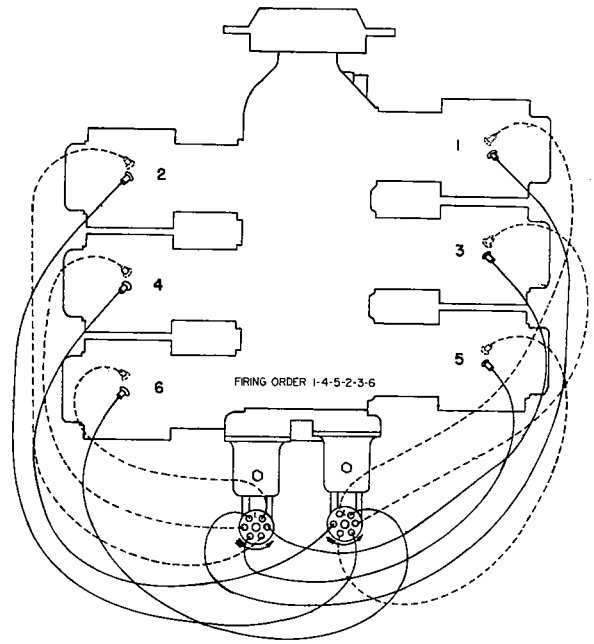

Figure 4-10. Ignition Wiring Diagram
Six Cylinder Engines - Optional

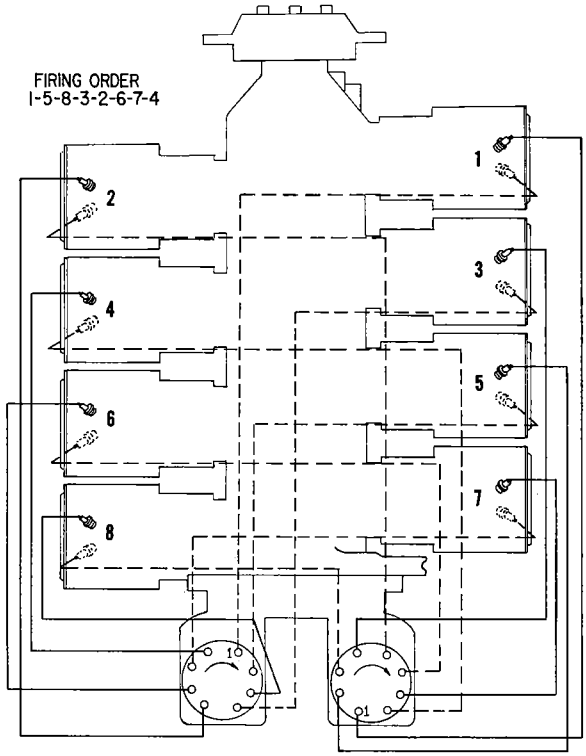

Figure 4-11. Ignition Wiring Diagram

NOTE

AC timing lights operate in the reverse manner as described above, the light goes out when the breaker points open.

4-41. After both magnetos have been timed, check as described in the next paragraph, to ascertain that both magnetos are set to fire together.

4-42. Back off the crankshaft a few degrees, the timing lights should go out. Bring the crankshaft slowly back in direction of normal rotation until the timing marks are in alignment. At this point, both lights should go on simultaneously. Tighten nuts to specified torque.

4-43. Final Timing D-2000 Dual Magneto. Using a battery power timing light, attach the red lead of timing light to the left switch terminal, green lead of timing light to right switch, black lead to an unpainted portion of the engine. Rotate the magneto in its mounting flange to a point where the light comes on, then slowly turn it in the opposite direction until the light goes out. Tighten the magneto clamps evenly.

4-44. Back off the crankshaft approximately 10° so the timing light goes on. Bring the crankshaft slowly back in direction of normal rotation until light goes out. Indicating the left main breaker opening at No. 1 firing position. The right main breaker monitored by the green light must open within ±2 engine degrees of No. 1 firing position. Completely tighten nuts to specified torque.

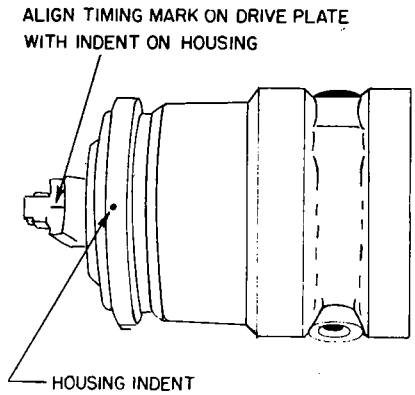

Figure 4-12. Timing Mark on Drive Plate Aligned With Indent on Magneto Housing

4-45. (Final Timing S8-700 Series). Remove the screw lockwasher and dust shield from the opening marked "T" on the side of the magneto. Then with a box wrench, remove the breather. See figure 4-13.

4-46. Connect a timing light to the switch wire (shielded capacitor wire) and to a good ground.

4-47. Insert a small screwdriver through the "T" marked opening and engage the painted rotor timing groove. (The painted lines on the distributor block and finger will be found in approximate alignment.) See figure 4-13. With a light force depress the screwdriver, moving the rotor in a counterclockwise direction, as viewed from the rear, sufficiently to remove any backlash while at the same time, rotate the magneto back and forth in both directions until the breaker points just begin to open, as indicated by the timing light.

NOTE

If inaccessability to the "T" marked hole prevents it from being used for holding out backlash, the magneto distributor block must be removed and the magneto rotor utilized for this purpose. This is accomplished as follows:

a. Disconnect the switch, coil and retard leads from their sockets in the cable outlet plate.

b. Remove the four screws that attach the ignition harness to the magneto.

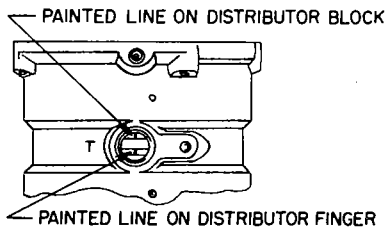

Figure 4-13. Painted Line on Distributor Finger and Block Viewed in Hole "T"

c. Remove the switch, coil and retard leads from their terminals in the distributor block.

d. Loosen the two setscrews mounted radially in the rear flange of the magneto and carefully remove the distributor block from the magneto.

e. Reach into the magneto and grasp the rotor. Note that when the rotor is turned counterclockwise to the point of breaker opening it will spring forward in a clockwise direction if it is released; therefore it must be held in the counterclockwise position while the magneto is rotated back and forth until the breaker points begin to open.

4-48. Tighten the magneto mounting clamps and replace the breather plug, shield, lockwasher and screw in the "T" opening, or if the distributor block was removed:

a. Connect the capacitor, coil and retard leads to their terminals in the distributor block and position the distributor block carefully in place in the magneto. Be sure the coil and retard leads are not pinched between the block and the housing.

b. Tighten the two setscrews that secure the block in the magneto.

c. Secure the harness to the magneto with four setscrews. Be sure the coil and retard leads are not pinched between the magneto and the cable outlet plate.

d. Replace switch, coil and retard leads.

4-49. When this has been accomplished the magneto is properly timed to the engine. If a recheck is required, or at anytime magneto timing is checked, it is necessary to hold out the backlash from the gears as described in paragraph 4-47 and the accompanying note, while a second person turns crankshaft through 20 degrees to firing position of No. 1 cylinder.

4-50. IGNITION HARNESS. After the magnetos have been timed to the engine, assemble the leads to the spark plugs. Consult the applicable wiring diagram for your installation. See figure 4-7, 4-8, 4-9, 4-10 or 4-11.

SECTION 5.

ACCESSORY HOUSING

5-1. It is assumed, at this time, that the magnetos and all accessories have been removed from the accessory housing.

5-2. Unless specifically called out to the contrary, all references to component parts will apply to all engines except those with a housing incorporating dual magnetos in a single housing. These housings will be identified as Dual Magneto Housings.

DISASSEMBLY

5-3. Fuel Pump (Diaphragm type) - See figure 5-3. The fuel pump, (7) located at the lower left of the accessory housing, is removed by unscrewing the two capscrews securing it to the housing.

5-4. Oil Pressure Screen Housing. (Where applicable) See figure 5-1. This housing (3) located just above the center of the accessory housing, is removed by unscrewing the four capscrews or three capscrews and one nut (whichever is applicable) that secure it to the accessory housing. On the O-290-D series, the oil cooler adapter is removed along with the oil pressure screen housing.

5-5. Thermostatic Valve and Oil Pressure Screen Housing. See figure 5-1. This unit, (5) used on some installations, is located at the same place as the oil pressure screen housing described in paragraph 5-4 and is removed in the same manner.

5-6. Oil Filter and Adapter. See figure 5-1. This unit, usually installed as an option, replaces either the oil pressure screen housing or the thermostatic valve and oil pressure screen housing. It can be removed as a unit from the accessory housing. Consult Service Letter 157 for more detail information on all models.

5-7. Oil Cooler Bypass Valve Assembly - See figure 5-1. This assembly is used only in conjunction with the oil pressure screen housing and opening is plugged when using either thermostatic valve or oil filter and adapter. Remove plug (8), gasket (2), spring (7), and plunger (12).

5-8. Oil Filter (Dual Magneto Housing) See figure 5-2. Remove filter assembly (11) by unscrewing the center bolt from the housing. Remove the thermostatic oil cooler bypass valve (21) and gasket (20). Remove retaining ring (10), sleeve (9), seat (8) and spring (7) of the oil filter by pass valve.

5-9. Fuel Pump Driven Gear, AN Type (Where applicable) See figure 5-4. Remove the adapter (3) and gear (5) from the mounting pad on the lower left side of the accessory housing.

5-10. Vacuum Pump Driven Gear (Where applicable) See figure 5-3. Remove the adapter (4) and gear (6) from the mounting pad on the upper right side of the accessory housing.

5-11. Hydraulic Pump Driven Gear (Where applicable) Remove the adapter and gear from the mounting pad on lower right side of the accessory housing.

5-12. Propeller Governor Driven Gear (Where Applicable) See figure 5-3. Remove the propeller governor oil line (12). Remove the adapter (10) from the mounting pad on lower right side of the accessory housing. Remove retaining ring (9), washer (5) from shaft gear and remove shaft gear (11) from adapter (10).

5-13. Dual Drives - Vacuum Pump and Hydraulic Pump - See figure 5-5. Remove brace (2), vacuum and hydraulic pump adapter (13), and dual drive adapter (8). Remove accessory drive gear (9), dual accessory drive gear (10), vacuum pump driven gear (12) and idler gear (11).

5-14. Dual Drives - Vacuum Pump and Propeller Governor - See figure 5-5. Remove brace (2), vacuum pump and propeller governor drive adapter (5), and dual drive adapter (8). Remove accessory drive gear (9), dual accessory drive gear (10), vacuum pump driven gear (12) and idler gear (11).

5-15. Removal from Engine. The accessory housing is removed from the engine by removing the attaching parts to the crankcase and oil sump. Since various gears are held in place through contact with the crankcase, put the housing on the bench with the inside up to avoid dropping loose gears.

5-16. See figure 5-4. If engine is equipped with "AN" type fuel pump drive, remove the fuel pump idler gear (7) from the idler gear shaft (8). Remove the idler gear shaft from the housing.

5-17. Oil Pump. See figure 5-6. Remove the oil pump body assembly from the accessory housing and detach the oil pump impellers. Pull oil pump drive shaft from the body. Do not remove the oil pump idler shaft unless obvious damage is apparent. A later oil pump assembly (see figure 5-7) employs sintered iron impellers and the idler shaft and driven impeller are one unit. In addition the oil pump drive shaft gear is keyed. These assemblies are not interchangeable.

5-18. Oil Suction Tube (Where applicable) Remove the cotter pins, nuts and washers from inside of housing and bolts from the outside of the housing and remove the oil suction tube.

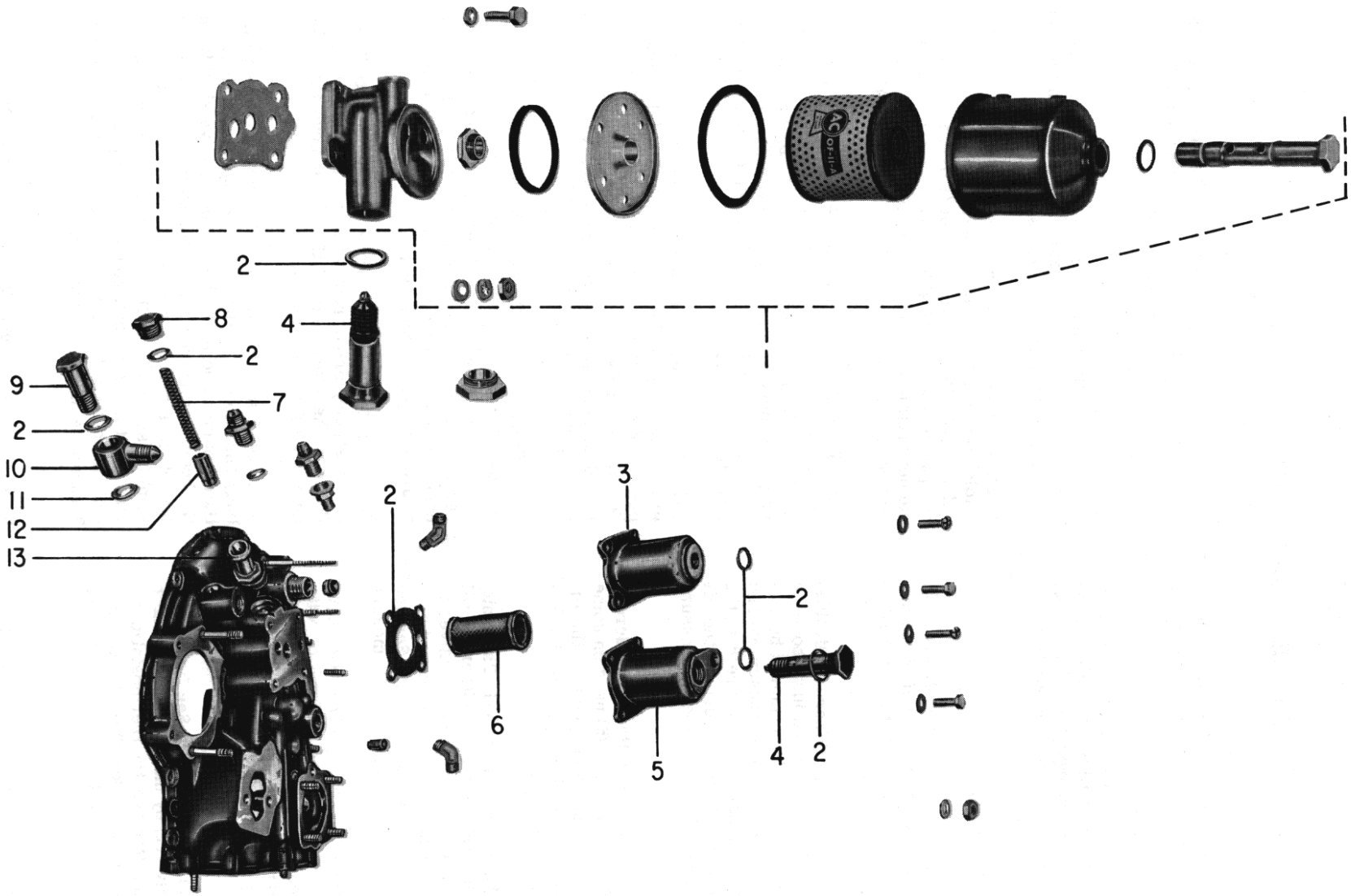

1. Oil Filter Kit
2. Gaskets
3. Oil Pressure Screen Housing
4. Thermostatic Valve
5. Thermostatic Valve and Oil Pressure Screen Housing
6. Oil Pressure Screen
7. Spring
8. Plug
9. Bolt
10. Elbow
11. Washer
12. Plunger
13. Breather Fitting

Figure 5-1. Oil Pressure Screen, Oil Cooler Bypass Valve and Full Flow Oil Filter

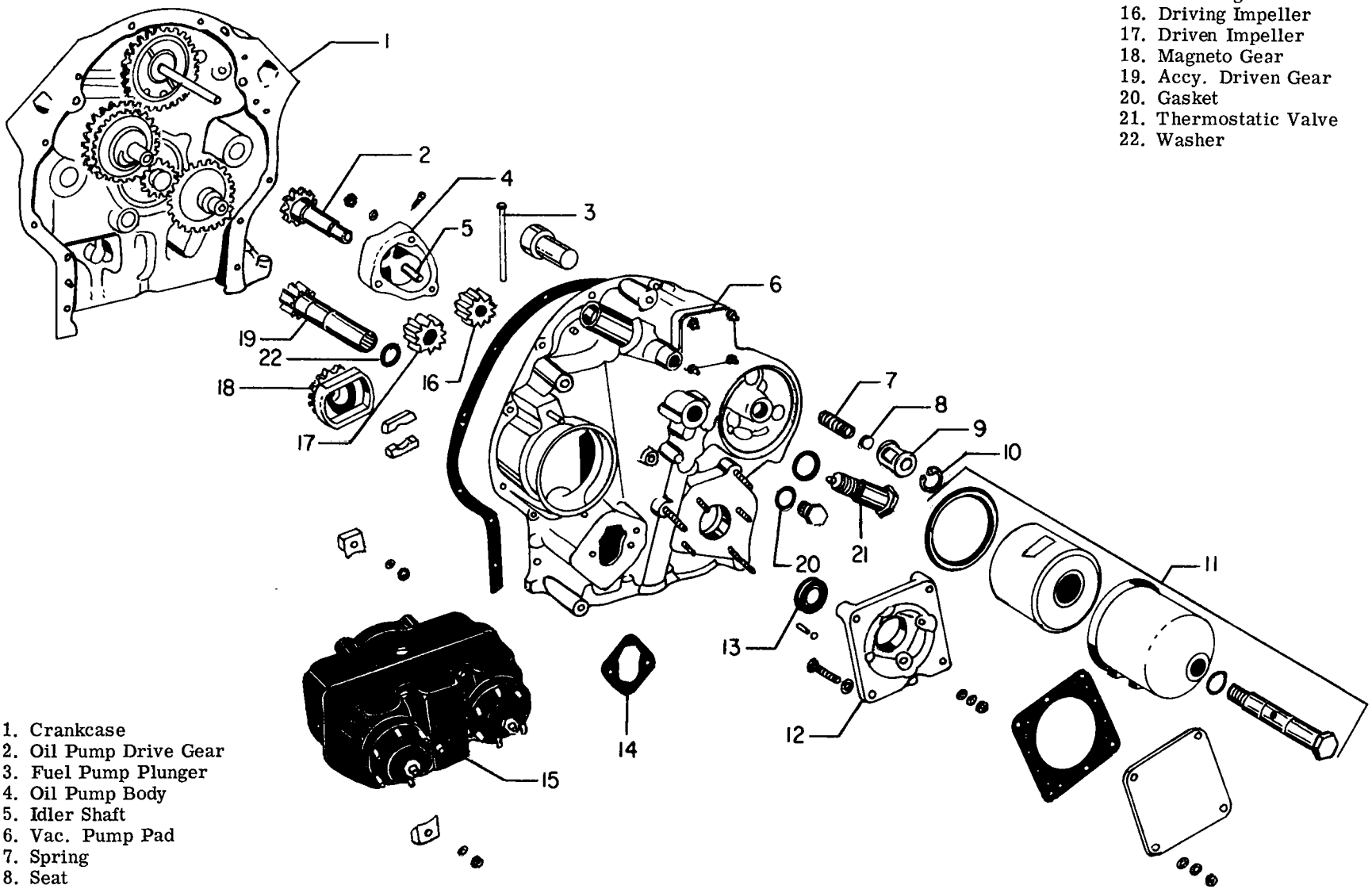

12. Hyd. Pump Drive Adapter
13. Oil Seal
14. Fuel Pump Gasket
15. Dual Magneto
16. Driving Impeller
17. Driven Impeller
18. Magneto Gear
19. Accy. Driven Gear
20. Gasket
21. Thermostatic Valve
22. Washer

1. Crankcase
2. Oil Pump Drive Gear
3. Fuel Pump Plunger
4. Oil Pump Body
5. Idler Shaft
6. Vac. Pump Pad
7. Spring
8. Seat
9. Sleeve
10. Retaining Ring
11. Oil Filter Assy.

Figure 5-2. Accessory Drive Components - Dual Magneto Housing

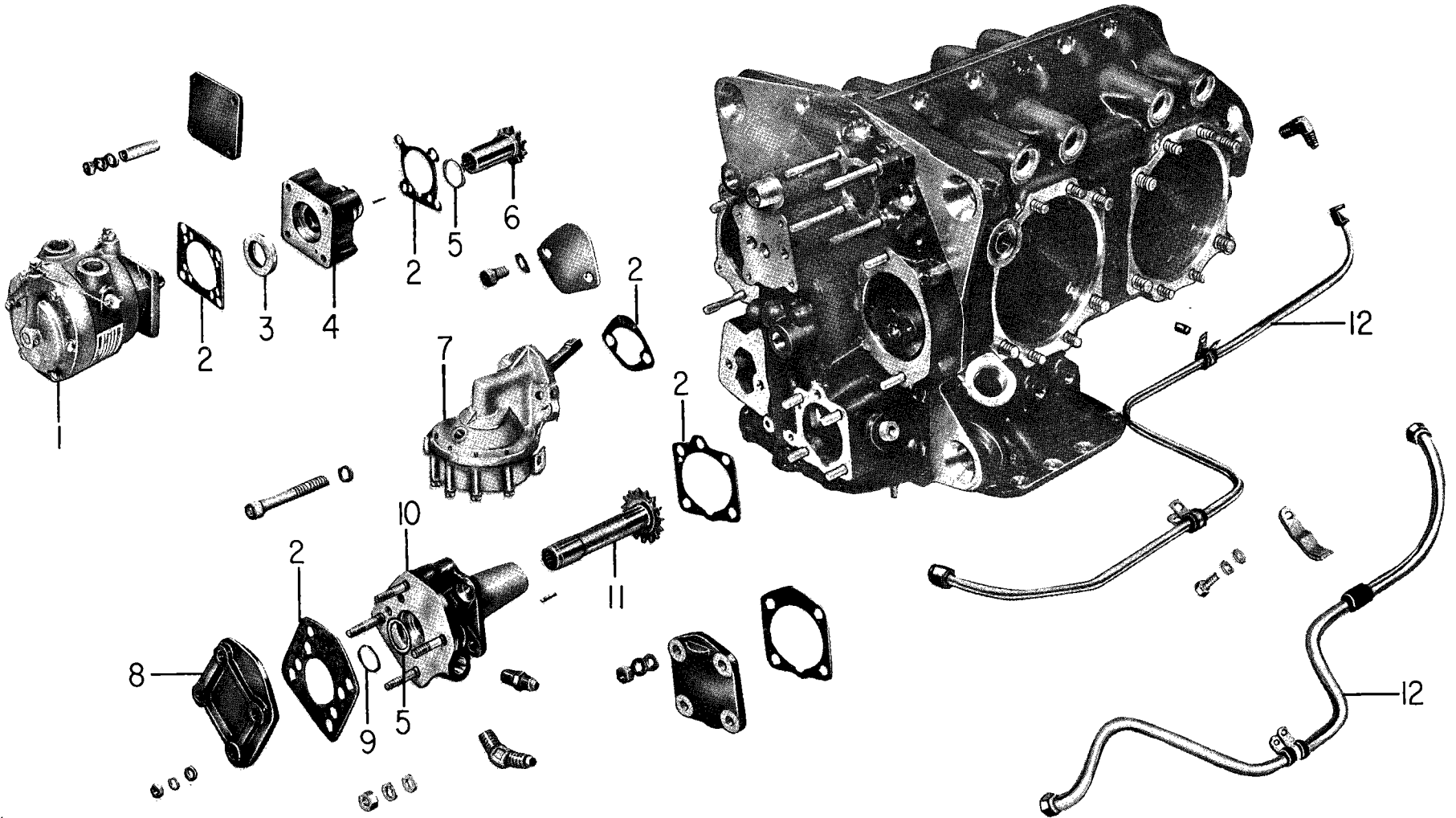

1. Vacuum Pump
2. Gasket
3. Oil Seal
4. Adapter
5. Washer
6. Vacuum Pump Driven Gear
7. Fuel Pump
8. Cover
9. Retaining Ring
10. Propeller Governor Drive Adapter
11. Propeller Governor Driven Gear
12. Propeller Governor Oil Line

Figure 5-3. Vacuum Pump and Propeller Governor Drive Assemblies and Propeller Governor Oil Line

5-19. Turbo Scavenge Pump (Where applicable) See figure 5-10 or 5-11. Disassemble as shown in the illustration.

5-20. Oil Scavenge Pump (AIO-360, -320) See figure 5-12. Disassemble as shown in the illustration.

CLEANING

5-21. Drilled Oil Passages. Remove all plugs from oil passages. Particular care must be given to see that oil passages are thoroughly cleaned. Employ a stiff bristle fibre brush and when the oil passages are cleaned, blow out the passages with a petroleum solvent and air. Reinstall all threaded plugs.

5-22. Clean all accessory housing parts in accordance with the general instructions as outlined in Section 3 of this manual

INSPECTION

5-23. Replace all gaskets, oil seals, circlips and retaining rings during reassembly.

REPAIR AND REPLACEMENT

5-24. Replace all gaskets, oil seals, circlips and retaining rings during reassembly.

REASSEMBLY

5-25. Oil Pump - See figure 5-6. Insert oil pump impellers into oil pump body. The driving impeller (4) is manufactured from steel and is installed in the upper compartment of the body. The aluminum driven impeller (5) is installed in the lower compartment. Assemble the oil pump idler shaft (7) in the body and through the driven impeller, secure the idler shaft to the body with a cotter pin. Assemble the oil pump drive shaft (1) through the housing and into the driving impeller. Install the assembly over the mounting studs on the accessory housing and assemble a washer and slotted nut on the studs. Tighten evenly and gradually, turning the drive shaft while tightening to assure free movement of the impellers. Tighten nuts to 150 inch pounds torque and lockwire. The later oil pump assembly employing sintered iron impellers is assembled in the same manner with these exceptions. The driven impeller and idler shaft are manufactured as a unit and the drive shaft is keyed. See figure 5-7.

CAUTION

Oil pump bodies are made for both clockwise and counterclockwise rotation engines. Be sure you use the correct oil pump body, these bodies are not interchangeable.

5-26. Oil Pump (Dual Magneto Housings) See figure 5-2. The oil pump assembly used in this series engines is similar to and assembled in the same manner as the first pump described in paragraph 5-25.

5-27. Oil Suction Tube. (Where applicable) Insert two drilled bolts from the outside of the housing. Assemble a gasket and the oil suction tube over the bolt ends and assemble plain washers, lockwashers and slotted nuts and tighten to 75 inch pounds torque. Secure with cotter pins.

5-28. Accessory Housing. Place a new accessory housing gasket over the locating dowels on rear of crankcase. Check assembly of two crankshaft idler gears. Should the engine be equipped with a diaphragm type fuel pump, the hub of the left hand gear should incorporate a cam. The fuel pump plunger should be inserted in the accessory housing as shown. Make certain that should the engine incorporate an "AN" fuel pump drive, the fuel pump idler gear shaft is in place on the inside of the accessory housing cover and is secured with two 1/4-20 hex head screws and a lockplate. Place the fuel pump idler gear on the idler shaft

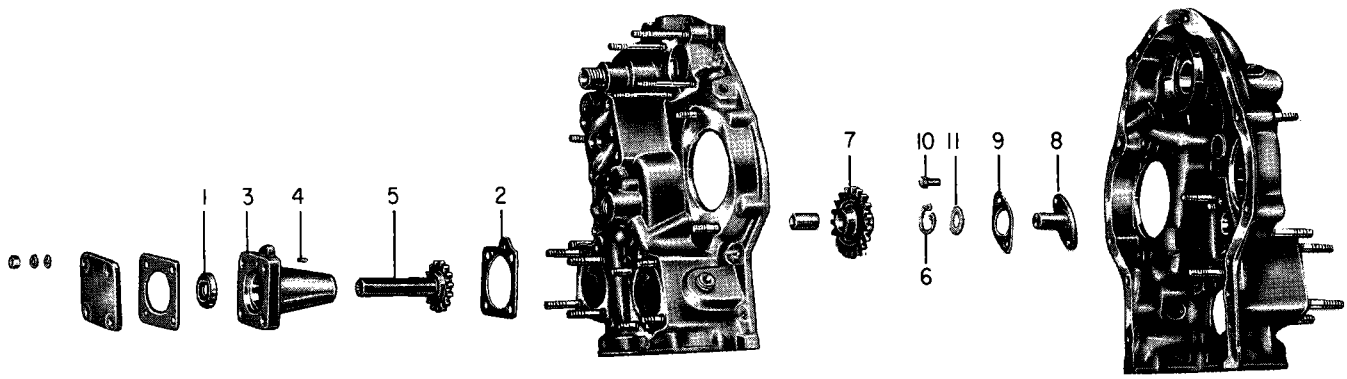

1. Oil Seal
2. Gasket
3. Fuel Drive Adapter
4. Pin
5. Fuel Pump Driven Gear
6. Retaining Ring
7. Fuel Pump Idler Gear
8. Idler Gear Shaft
9. Lockplate
10. Screw

Figure 5-4. AN Fuel Pump Drive Assembly

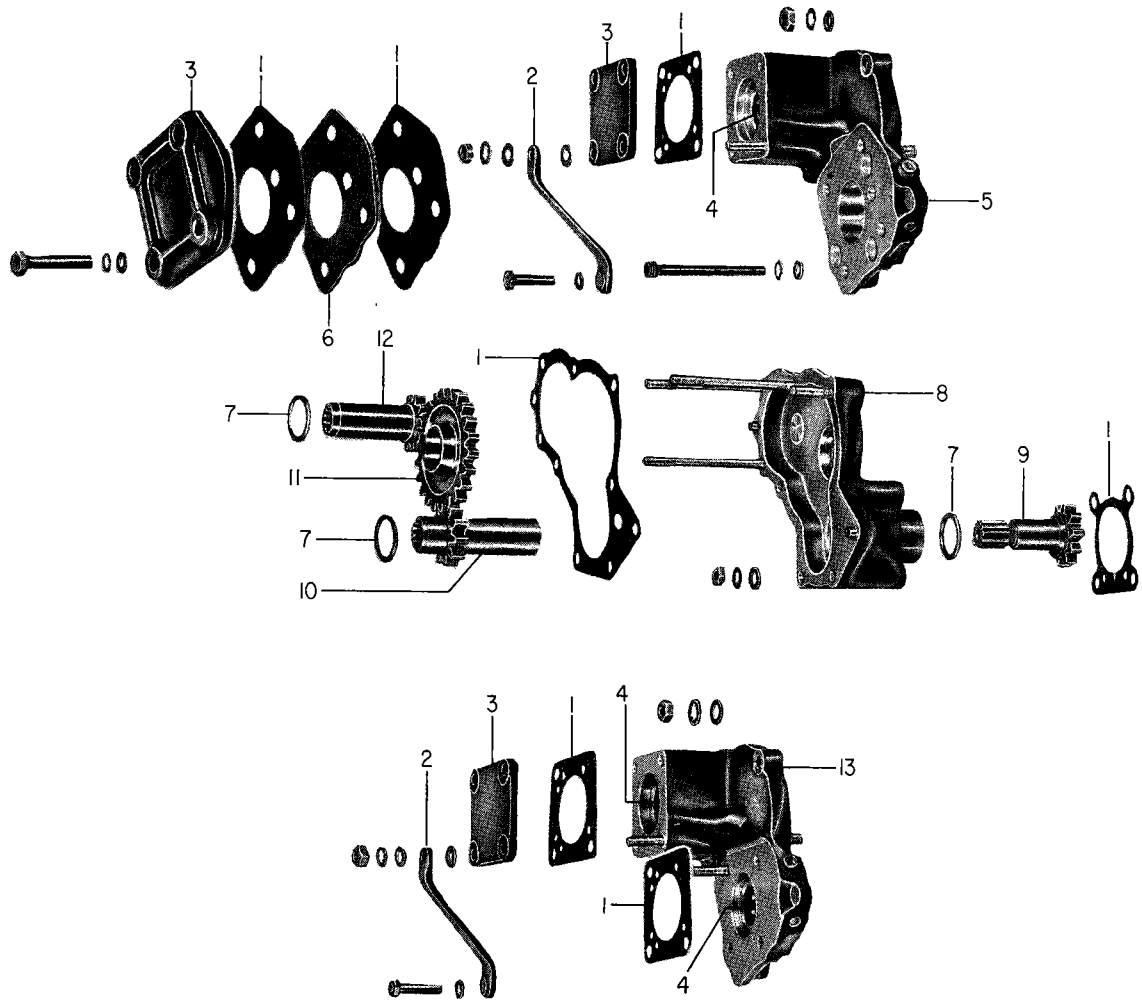

1. Gasket
2. Brace
3. Cover
4. Oil Seal
5. Vacuum Pump and Prop. Gov. Dual Drive Adapter
6. Spacer
7. Washer
8. Dual Drive Adapter
9. Accessory Drive Gear
10. Dual Accessory Drive Gear
11. Idler Gear
12. Vacuum Pump Driven Gear
13. Vacuum Pump and Hydraulic Pump Dual Drive Assembly

Figure 5-5. Vacuum Pump and Hydraulic Pump Dual Drive Assembly

(Engines with AN fuel pump drive) and install the thrust washer and retaining ring that holds the idler gear on the shaft. Be sure that a new oil seal has been inserted in the tachometer drive shaft bore. Rotate the oil pump drive shaft so that the lobes on the shaft align with slots in the crankshaft gear. Note that in the Dual Magneto Housing the oil pump drive shaft meshes with the crankshaft idler gear.

5-29. Apply a liberal coating of engine oil to the tachometer drive shaft and all other contact surfaces, such as gear teeth and idler gear hub. Carefully fit the accessory housing in place on rear of crankcase, guiding the housing first over the tachometer drive shaft and then on to the locating dowels: Secure the housing in place with ten 1/4-20 x 15/16 hex head bolts and two 1/4-20 x 1-3/4 bolts. Two of the 1/4-20 x 15/16 bolts are inserted from the crankcase side through holes in front of the right magneto. The two 1/4-20 x 1-3/4 hex head bolts are inserted in the two holes adjacent to the left magneto. Assemble all bolts with plain washers and lock washers.

5-30. Vacuum Pump Drive. See figure 5-3. If the engine is equipped with a vacuum pump drive, assemble the unit as follows: Insert a new oil seal (3) into the recess in the pump side of the vacuum pump adapter assembly (4). Make sure that seal is inserted with the grooved side toward the adapter. Place a new accessory driven gear washer (5) over the shaft of the vacuum pump driven gear (6), lubricate the shaft, and insert the gear into the adapter being careful not to push oil seal out of its seat. Using a new gasket attach the adapter to the upper right side of the accessory housing with

four 1/4-20 plain nuts, plain washers and lockwashers. If the engine is equipped with vacuum pump drive only, place a cover over the exposed end of the drive to prevent entrance of dirt and/or other foreign matter. If the engine is equipped with vacuum pump install the vacuum pump on the adapter instead of the cover.

5-31. Propeller Governor Drive. See figure 5-3. On those engines equipped with a propeller governor drive, lubricate and insert the propeller governor drive shaft gear (11) into the adapter (10). Place a new accessory driven gear washer (5) over the drive end of the shaft and secure shaft in place with a 13/16 inch diameter external retaining ring (9). Using a new gasket, attach the adapter to the lower right side of the housing with four 5/16-18 plain nuts, plain washers and lockwashers. Attach cover (8) on the exposed end of the drive as protection against dirt and foreigh matter. Assemble the propeller governor oil line (12).

5-32. Hydraulic Pump Drive. If the engine is equipped with a hydraulic pump drive, assemble the unit as follows: Insert a new oil seal into the recess in the pump side of the hydraulic pump adapter assembly. Make sure that the seal is inserted with the grooved side toward the adapter. Place a new accessory drive gear washer over the shaft of the hydraulic pump drive gear and insert the gear into the adapter being careful not to damage the oil seal. Using a new gasket, attach the assembly to the lower right side accessory housing with nuts, plain washers and lockwashers. If the engine is equipped with hydraulic pump drive only, place a cover over the exposed end of the drive. If the engine is equipped with a hydraulic pump, install the pump on the adapter instead of the cover.

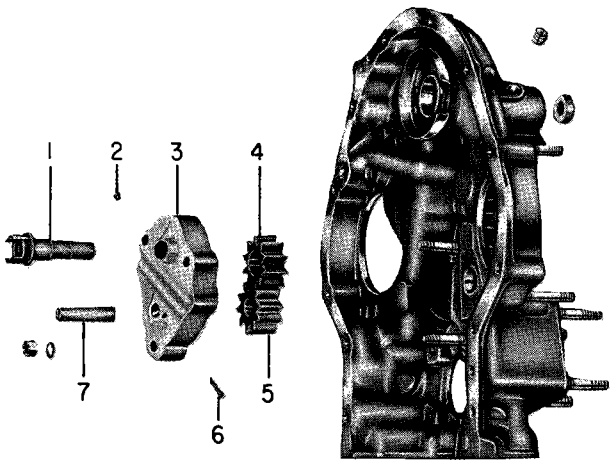

1. Drive Shaft
2. Plug
3. Body
4. Driving Impeller
5. Drive Impeller
6. Cotter Pin
7. Idler Shaft

Figure 5-6. Oil Pump Drive Assembly

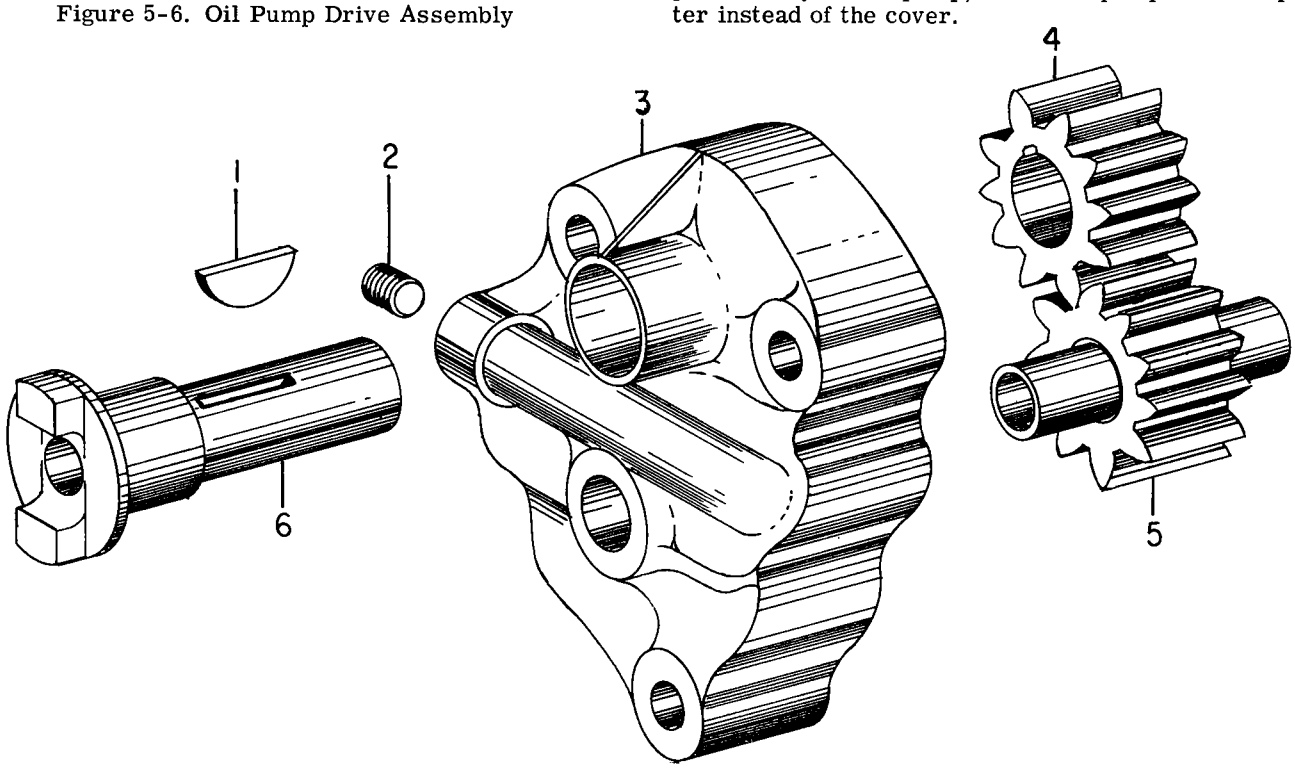

1. Woodruff Key
2. Plug
3. Oil Pump Body
4. Driving Impeller
5. Driven Impeller and Idler Shaft
6. Oil Pump Drive Shaft

Figure 5-7. Oil Pump Drive Assembly (Sintered Iron Impellers)

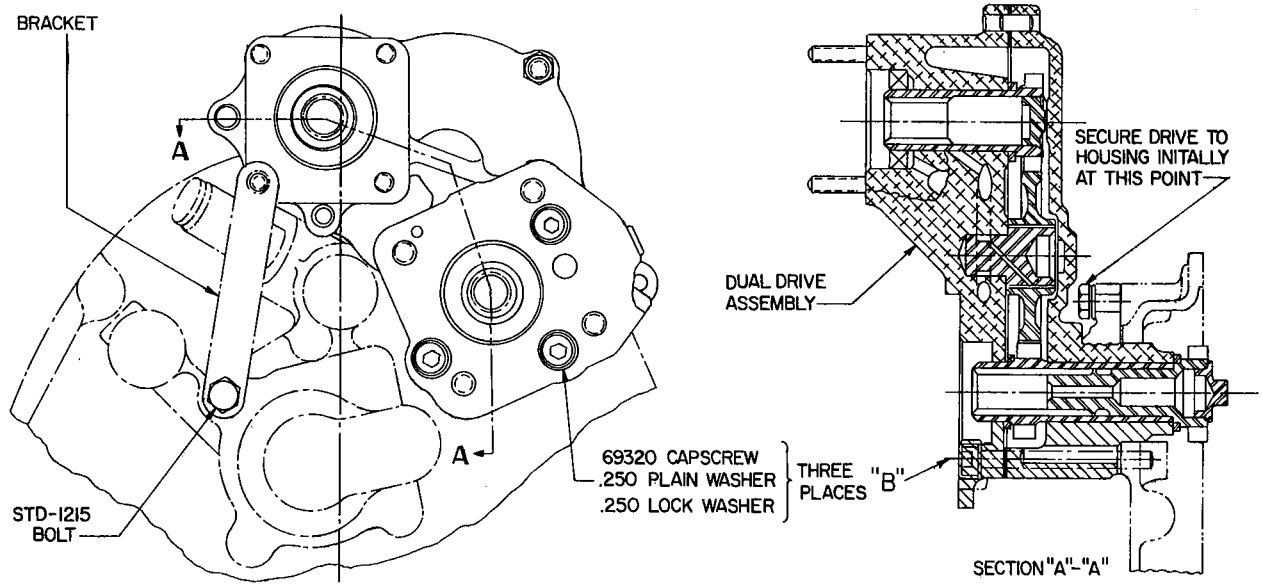

Figure 5-8. Dual Drive Assembly - Vacuum Pump and Propeller Governor

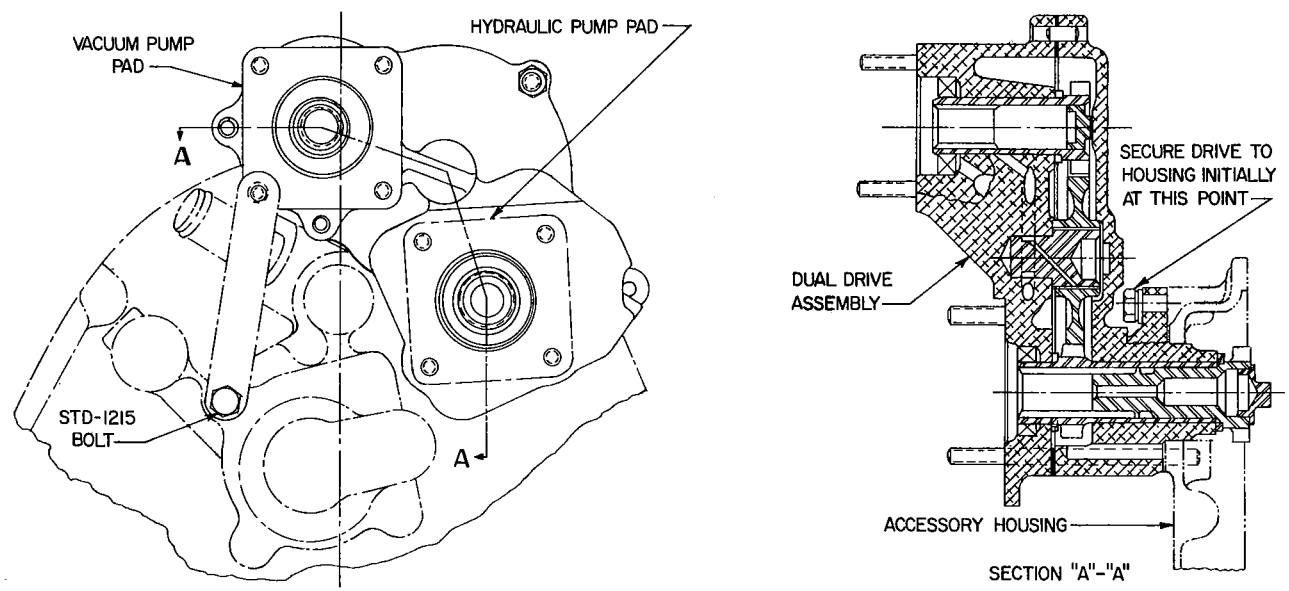

Figure 5-9. Dual Drive Assembly - Vacuum Pump and Hydraulic Pump

5-33. "AN" Fuel Pump Drive. See figure 5-4. If the engine is equipped with an "AN" fuel pump drive, assemble the unit as follows: Insert a new oil seal (1) into the recess in the pump side of the fuel pump adapter assembly (3). Make sure that the seal is inserted with the grooved side toward the adapter. Insert the fuel pump driven gear (5) into the adapter being careful not to damage the seal. Using a new gasket attach the assembly to the lower left side of the accessory housing with nuts, plain wahser and lockwashers. If the engine is equipped with fuel pump drive only place a cover over the exposed end of the drive. If the engine is equipped with an AN fuel pump, install the pump on the adapter instead of the cover.

5-34. See figure 5-5. Dual Drive (Vacuum Pump and Propeller Governor) If the engine is equipped with a vacuum pump and propeller governor dual drive, mount the drive assembly on the vacuum pump mounting pad at the upper right side and fasten with a 1/4-20 nut, three 1/4-20 socket head capscrews, and required plain washers and lock washers. Mount the vacuum pump and propeller governor on the dual drive housing, using a new gasket, and install the bracket between the vacuum pump pad and pressure screen housing mounting flange. Use spacer washers under ends of brace if required for proper seating.

CAUTION

Brace must be seated properly so there is no stress at either end of bracket when nuts are tightened.

5-35. See figure 5-5. Dual Drive (Vacuum Pump and Hydraulic Pump). If the engine is equipped with a vacuum pump and hydraulic pump dual drive, mount the drive assembly on the vacuum pump mounting pad at the upper right side and fasten with a 1/4-20 nut, plain washer and lock washer on the short stud in the accessory housing. Install the vacuum pump and hydraulic pump on the dual drive housing and fasten with required nuts and washers; then install the bracket between the vacuum pump pad and pressure screen housing flange. Use spacer washers under end of brace if required for proper seating.

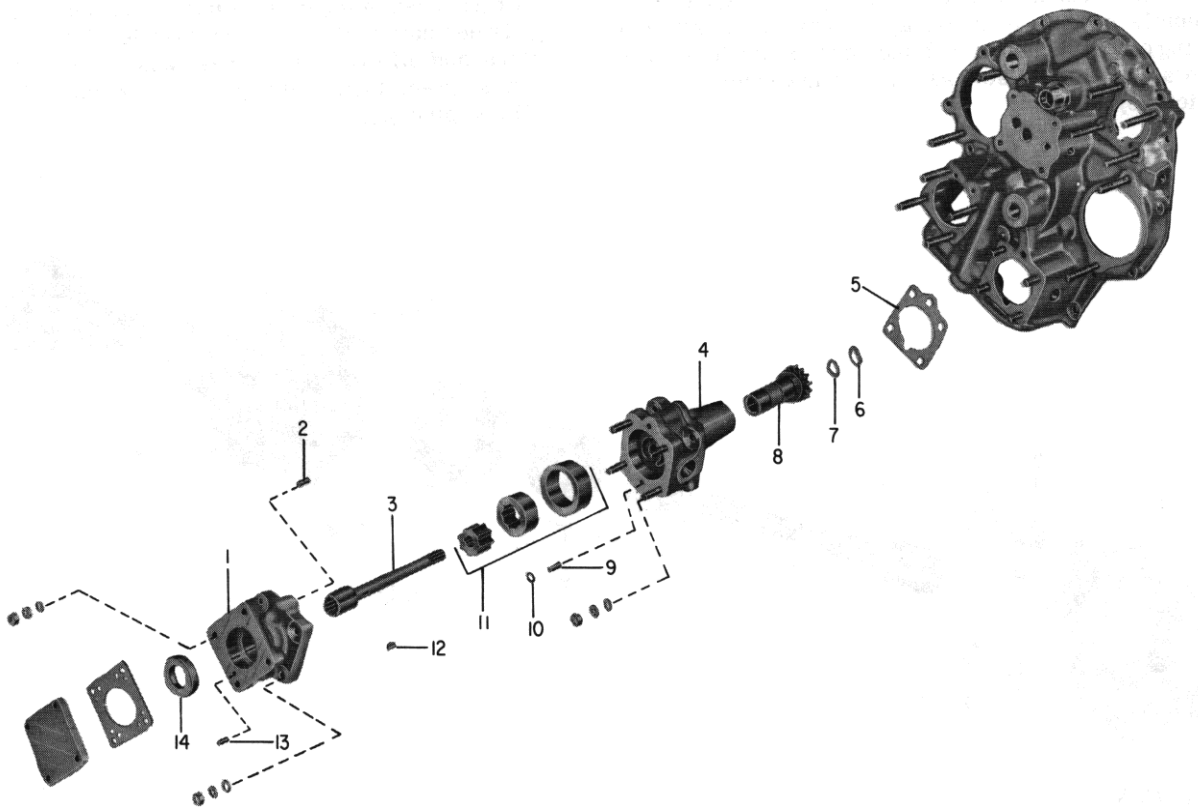

1. Hydraulic Pump Adapter
2. Dowel
3. Hydraulic Pump Drive Shaft Gear
4. Turbo Scavenge Pump Adapter
5. Gasket
6. Retaining Ring
7. Washer
8. Hydraulic Pump Drive Gear
9. Dowel
10. Oil Seal Ring
11. Gerotor Pump
12. Woodruff Key
13. Pin
14. Oil Seal

Figure 5-10. Turbo Scavenge and Hydraulic Pump Drive Assy. (O-540)

CAUTION

Brace must be seated properly so there is no stress at either end of bracket when nuts are tightened.

5-36. Fuel Pump (Diaphragm Type) See figure 5-3. Before installing the diaphragm type fuel pump make sure that the pump drive plunger is all the way up and the cam of gear is on the low side. If the plunger is down when the pump is installed the pump arm will contact the side of plunger and inturn will break out the accessory case at bottom of plunger.

5-37. Turbo Scavenge Pump (Where applicable.) See figure 5-10 or 5-11. Assemble the pump assembly in the reverse manner of disassembly and install on the mounting pad on the lower right side of the accessory housing.

5-38. Oil Scavenge Pump (AIO-360, -320). See figure 5-12. Assemble the pump assembly in the reverse manner of disassembly and install on the mounting pad on the lower right side of the accessory housing.

5-39. Oil Pressure Screen Housing. See figure 5-1. Assemble screen in housing, assemble gasket and housing on the mounting pad and secure with four capscrews or three capscrews and one nut (whichever is applicable).

5-40. Thermostatic Valve and Oil Pressure Screen Housing. See figure 5-1. Assemble screen, gasket and thermostatic valve in housing. Assemble gasket and housing on the mounting pad and secure with four capscrews or three capscrews and one nut (whichever is applicable).

5-41. Oil Filter and Adapter. See figure 5-1. Assemble gasket and thermostatic valve in adapter. Assemble component parts of the filter assembly and attach to the adapter with the center stud. Tighten center stud to 20-25 foot pounds torque. Consult Service Letter L-157 for detail information.

5-42. Oil Filter (Dual Magneto Housing) See figure 5-2. Assemble oil filter bypass valve spring (7), seat (8) and sleeve (9) in the accessory housing and secure in housing with an internal retaining ring (10). Assemble gasket and thermostatic oil cooler bypass valve (20) in the accessory housing. Assemble component parts of the mounting pad. Tighten center stud to 20-25 foot pounds torque. Consult Service Letter L157 for more detail information.

5-43. Oil Cooler Bypass Valve Assembly. See figure 5-1. This assembly is used only in conjunction with the oil pressure screen housing and the opening is plugged when using either a thermostatic oil cooler bypass valve and oil pressure screen assembly or oil filter and adapter. Install plunger (12), spring (7), washer (2) and plug (8).

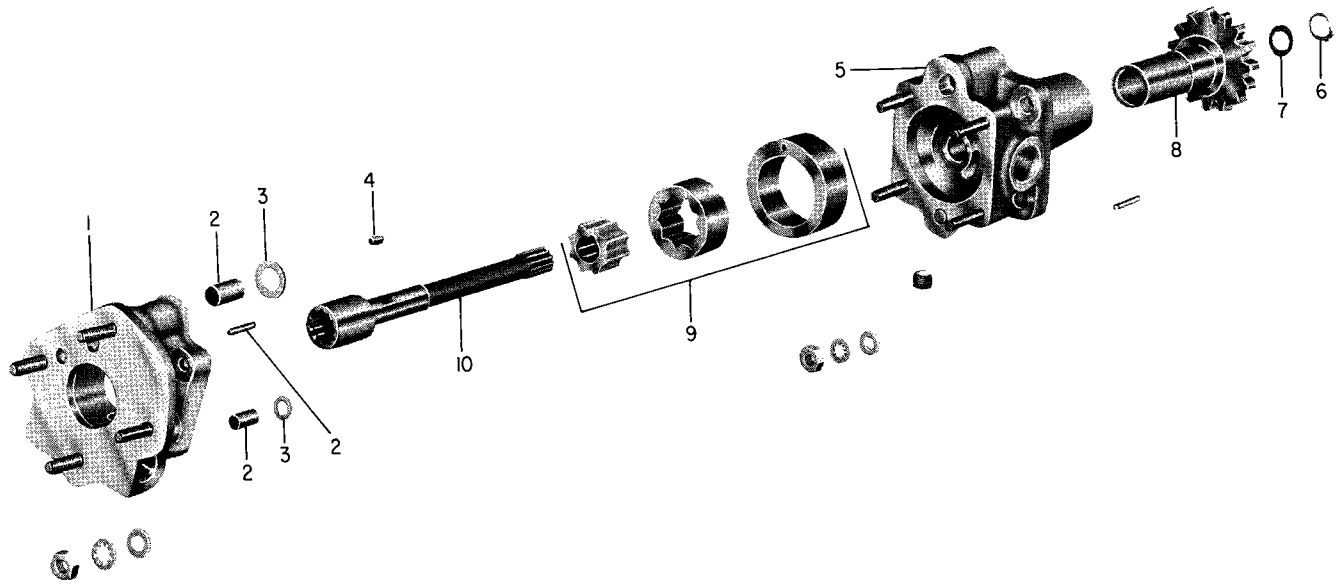

1. Prop. Gov. Drive Adapter
2. Dowel
3. Oil Seal Ring
4. Woodruff Key
5. Turbo Scavenge Pump Adapter
6. External Ring
7. Washer
8. Prop. Gov. Drive Shaft Gear
9. Gerotor
10. Prop. Gov. Drive Shaft

Figure 5-11. Turbo Scavenge Pump and Governor Drive Assembly (O-360)

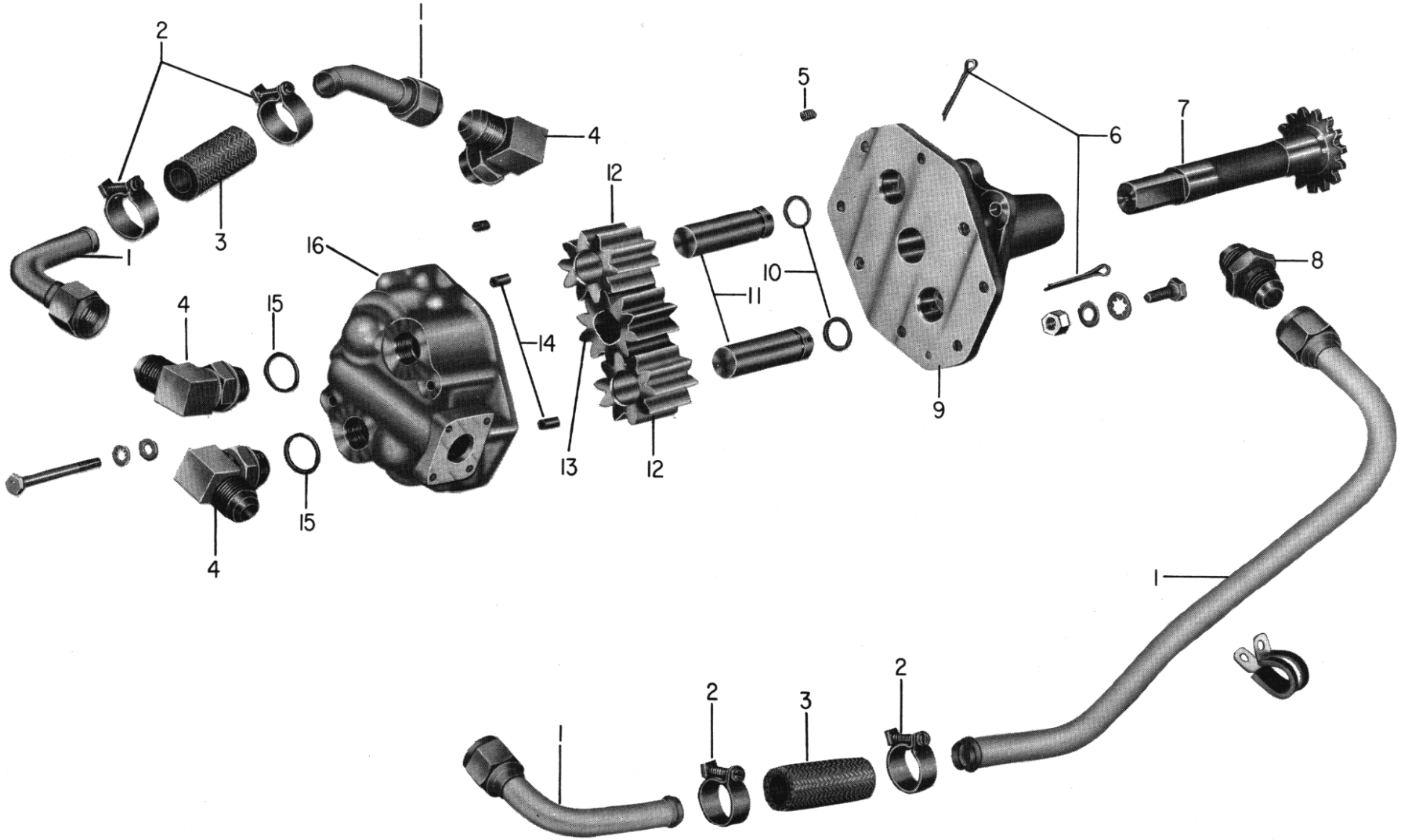

1. Tube Assembly
2. Hose Clamp
3. Hose
4. Fitting
5. Heli Coil
6. Cotter Pins
7. Pump Drive Shaft Assembly
8. Union
9. Pump Adapter Assembly
10. Oil Seals
11. Idler Shafts
12. Driver Impellers
13. Driving Impeller
14. Dowels
15. Oil Seals
16. Pump Housing Assembly

Figure 5-12. Oil Scavenge Pump Assembly (AIO-320, -360)

SECTION 6.
CYLINDERS, PISTONS AND VALVE TRAIN

6-1. The piston, being a reciprocating part, is normally grouped with the crankshaft in a theoretical breakdown of the engine into basic components. However, from a practical standpoint, it is felt that the piston should be considered with the cylinder insofar as overhaul procedures are concerned. For example, the basic configuration of the engine requires the removal and reassembly of the pistons at the same time the cylinders are removed or replaced.

6-2. For the purposes of this manual, the valve train will be considered as all parts of the valve operating mechanism beyond the camshaft, beginning with the hydraulic tappet assembly.

6-3. Although subject engines employ either parallel valve cylinders or angle valve cylinders with either up exhaust or down exhaust, basic overhaul procedures are the same for all cylinders. The overhaul procedures described in this section will be applicable to all cylinder assemblies except as noted.

6-4. Either plain steel, chrome plated, or nitride hardened steel cylinders may be employed on the engines discussed in this overhaul manual. The color code for these cylinders is as follows:

a. Plain steel	All grey
b. Chrome plated	Orange paint on cylinder fins below spark plug hole.
c. Nitride hardened steel	Blue paint on cylinder fins below spark plug hole.
d. .010 inch oversize plain cylinders	Green when applied to customer overhaul engines.
e. .020 inch oversize plain cylinders	Yellow when applied to customer overhaul engines.

NOTE

A yellow color, on fins ABOVE spark plug hole, indicates that long reach spark plugs are used.

REMOVAL FROM ENGINE

6-5. It is assumed that the ignition harness, intake pipes and primer or fuel injection lines have been previously removed.

6-6. INTERCYLINDER BAFFLES. (Where applicable) Using the intercylinder baffle tool (64885), turn the baffle retaining hook so that it disengages the retainer. Remove the intercylinder baffle and hook from between the cylinders.

6-7. OIL DRAIN TUBES. Loosen hose clamps at lower end of tube and slide tube out of hose. Loosen gland nut at cylinder head fitting and remove drain tube.

6-8. Deleted

6-9. Deleted

6-10. CYLINDER ASSEMBLY (All models) Remove rocker box covers and gaskets. Rotate the crankshaft to place the piston of No. 1 cylinder at top center of the compression stroke. (With the piston in this position both valves will be closed and the piston exgended away from the crankcase to avoid damage when the cylinder is removed.)

6-11. PARALLEL VALVE CYLINDERS (Except-O-235, O-290-D, -D2) See figure 6-1. Remove the valve rocker shaft (8) and remove valve rockers (5) and valve stem cap from exhaust valve stem. Remove the push rod by grasping the end and pulling through the shroud tube (1). Remove the plain nut (4) lockplate (3) spring (2) and spacer. Pull the shroud tube (1) through the cylinder head and discard the shroud tube seals.

6-12. (O-235, O-290-D, -D2). See figure 6-3. Remove valve adjusting nuts (19) and screws (18). Note that the shroud tubes on these models cannot be removed until the cylinder is removed. Remove the valve rocker shafts (14) and valve rockers (13 or 17). Remove the push rods (12) from the shroud tubes.

6-13. ANGLE VALVE CYLINDERS. See figure 6-5 or 6-6. Remove rocker shaft covers (31) and gaskets. Push valve rockers shafts (20) outward to allow clearance for removal of valve rockers (22) and thrust washers (23). Remove valve stem cap (32). Do not attempt to remove valve rocker shafts until the cylinder is removed. Remove the push rods (13) by pulling through the shroud tube (18). Using shroud tube wrench (ST-142) turn each shroud tube 90° either way, this releases the detent on tube from spring. Remove the tubes by first releasing them from the seal seats in cylinder head and then withdrawing tubes from seal retainers in crankcase. Remove shroud tube seal sleeves (19) and seals (14) from end of shroud tubes; also remove seals from crankcase. Discard all seals. Place washer (15), springs (17) and sleeves (19) in the cleaning basket.

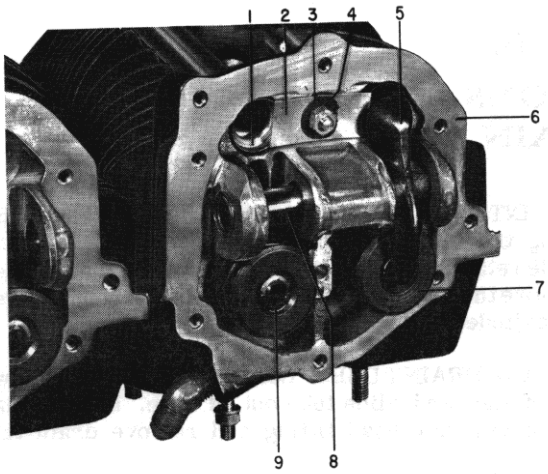

1. Shroud Tube
2. Shroud Tube Spring
3. Shroud Tube Lockplate
4. Plain Nut
5. Valve Rocker
6. Rocker Box
7. Valve Spring Seat
8. Valve Rocker Shaft
9. Valve Keys

Figure 6-1. Method of Securing Shroud Tubes Parallel Valve Cylinder (except O-235, O-290-D, -D2)

6-14. (All Models.) If cylinder base hold down nuts employ pal-nuts or are lockwired, remove. Neither pal-nuts nor lockwire are currently employed. Remove the cylinder base hold down nuts (and hold down plate where employed); then remove the cylinder by pulling straight away from the crankcase. As the cylinder is pulled away, catch and hold the piston to prevent it falling against the crankcase and being damaged. If the valve rocker shafts have not been previously removed, remove at this time. Discard cylinder base oil seal rings.

6-15. Pistons. Remove piston pin plugs from the piston. Using a piston pin puller (64843), pull pin from piston and remove piston.

CAUTION

After the removal of a cylinder and piston the connecting rod must be supported to prevent damage to the rod and crankcase. This is done by supporting each connecting rod with torque hold down plate ST-222, rubber band (discarded cylinder base on seal rings) looped around the cylinder base studs or using plates as shown in figure 6-2.

6-16. Removal of the other cylinders and pistons may be done in any desired order, but less turning of the crankshaft is involved if the cylinders are removed successively in the engine's firing order 1-3-2-4, 1-4-5-2-3-6 or 1-5-8-3-2-6-7-4.

CAUTION

Do not use a magnet to remove the socket or plunger assembly from the engine as it could cause the ball to remain off its seat making the unit inoperative.

6-17. HYDRAULIC TAPPET PLUNGERS. (Where applicable) Using hydraulic tappet tool (64941), remove the push rod socket by placing heavy grease on ball end of "T", inserting the ball end in socket and withdrawing, the socket will adhere to the grease. Using the hollow end of the tool pushing it over the plunger and withdrawing the hydraulic tappet plunger. In the event the hydraulic tappet tool is not available, remove the push rod sockets with fingers or by using a pair of needle-nose pliers. (See figure 6-7.) Bend a right angle in one end of a piece of wire and insert this end into the space between the plunger assembly and the tappet body. Turn the wire 90° to engage a coil of the spring and draw out the hydraulic tappet plunger assembly as shown in figure 6-8.

CAUTION

It is imperative that the various parts of each tappet assembly be kept together during all overhaul operations, in order that all component parts may be reassembled with theri original mating parts and each completed assembly inserted in its original location in the crankcase.

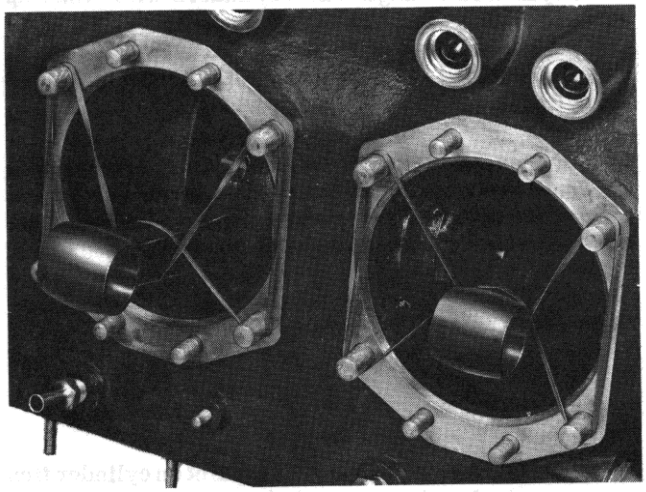

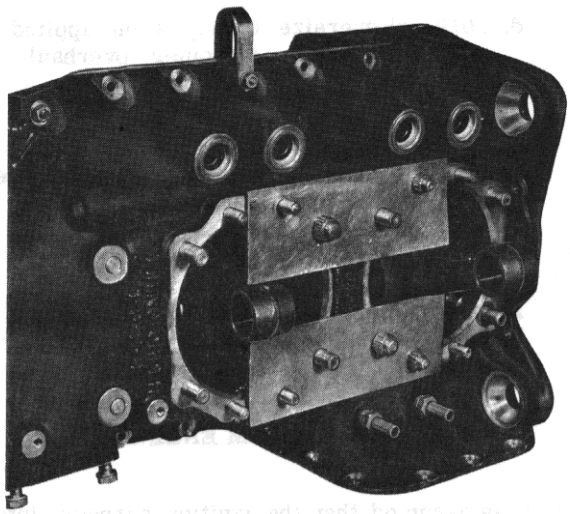

Figure 6-2. Two Methods of Supporting Connecting Rods

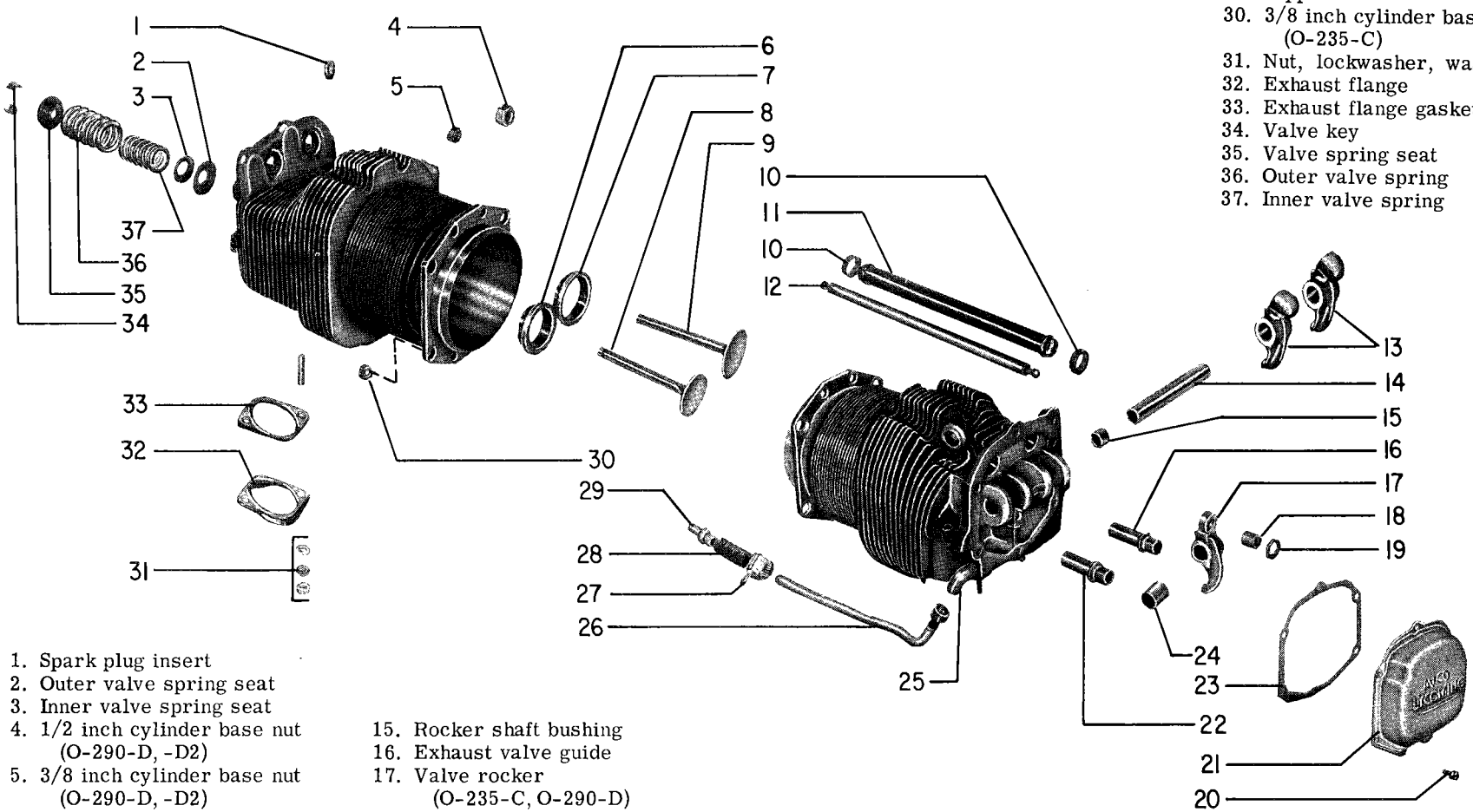

1. Spark plug insert
2. Outer valve spring seat
3. Inner valve spring seat
4. 1/2 inch cylinder base nut (O-290-D, -D2)
5. 3/8 inch cylinder base nut (O-290-D, -D2)
6. Exhaust valve seat
7. Intake valve seat
8. Exhaust valve
9. Intake valve
10. Shroud tube seal
11. Shroud tube
12. Push rod
13. Valve rockers (O-290-D2)
14. Valve rocker shaft
15. Rocker shaft bushing
16. Exhaust valve guide
17. Valve rocker (O-235-C, O-290-D)
18. Valve adjusting screw (O-235-C, O-290-D)
19. Nut (O-235-C, O-290-D)
20. Screw
21. Rocker box cover
22. Intake valve guide
23. Rocker box gasket
24. Valve rocker bushing
25. Elbow
26. Drain tube
27. Hose clamp
28. Hose
29. Nipple
30. 3/8 inch cylinder base nut (O-235-C)
31. Nut, lockwasher, washer
32. Exhaust flange
33. Exhaust flange gasket
34. Valve key
35. Valve spring seat
36. Outer valve spring
37. Inner valve spring

Figure 6-3. Parallel Valve Cylinder Assembly (O-235, O-290-D, -D2)

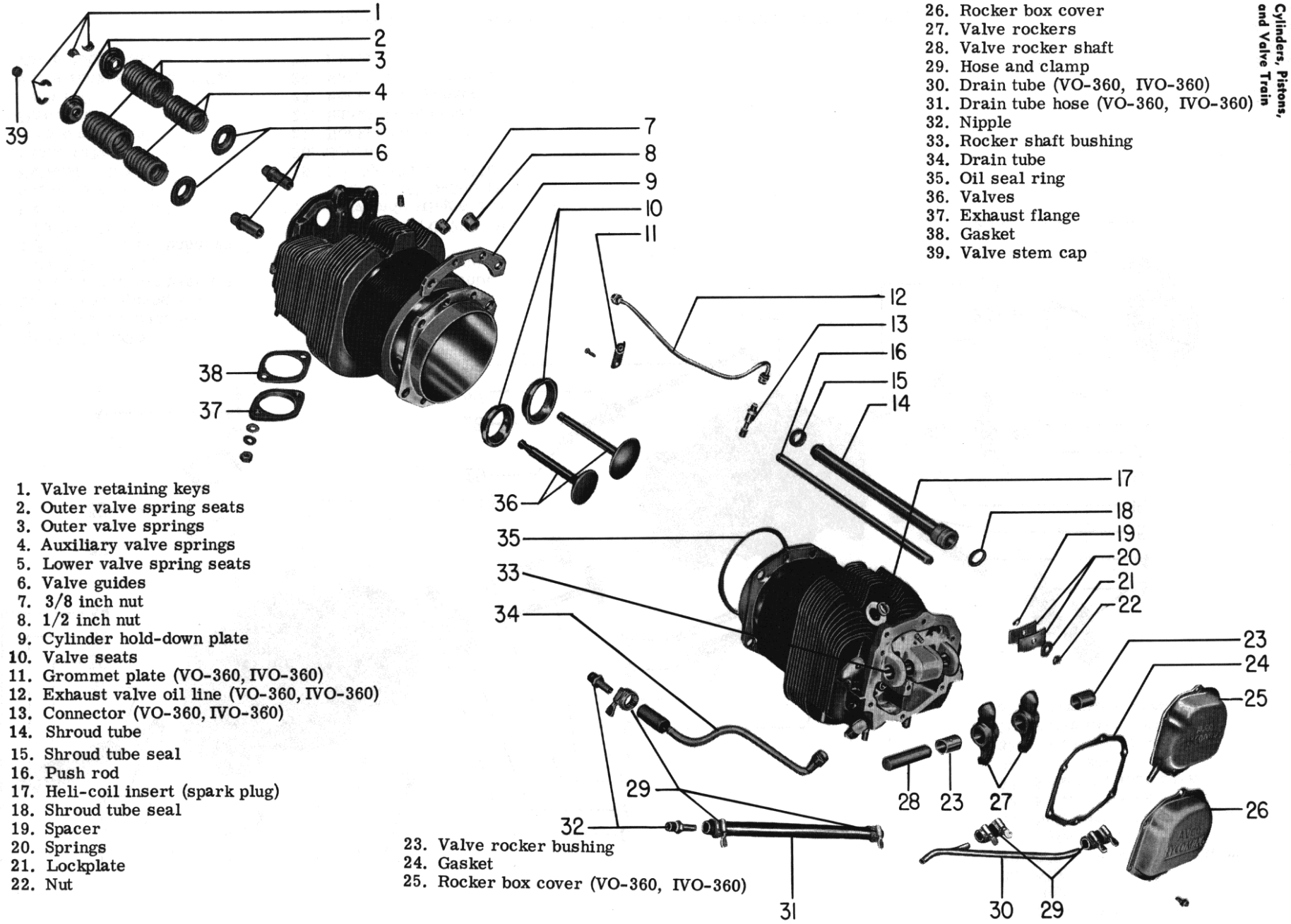

1. Valve retaining keys
2. Outer valve spring seats
3. Outer valve springs
4. Auxiliary valve springs
5. Lower valve spring seats
6. Valve guides
7. 3/8 inch nut
8. 1/2 inch nut
9. Cylinder hold-down plate
10. Valve seats
11. Grommet plate (VO-360, IVO-360)
12. Exhaust valve oil line (VO-360, IVO-360)
13. Connector (VO-360, IVO-360)
14. Shroud tube
15. Shroud tube seal
16. Push rod
17. Heli-coil insert (spark plug)
18. Shroud tube seal
19. Spacer
20. Springs
21. Lockplate
22. Nut
23. Valve rocker bushing
24. Gasket
25. Rocker box cover (VO-360, IVO-360)
26. Rocker box cover
27. Valve rockers
28. Valve rocker shaft
29. Hose and clamp
30. Drain tube (VO-360, IVO-360)
31. Drain tube hose (VO-360, IVO-360)
32. Nipple
33. Rocker shaft bushing
34. Drain tube
35. Oil seal ring
36. Valves
37. Exhaust flange
38. Gasket
39. Valve stem cap

Figure 6-4 Parallel Valve Cylinder Assembly (Except O-235, O-290-D, O-290-D2)

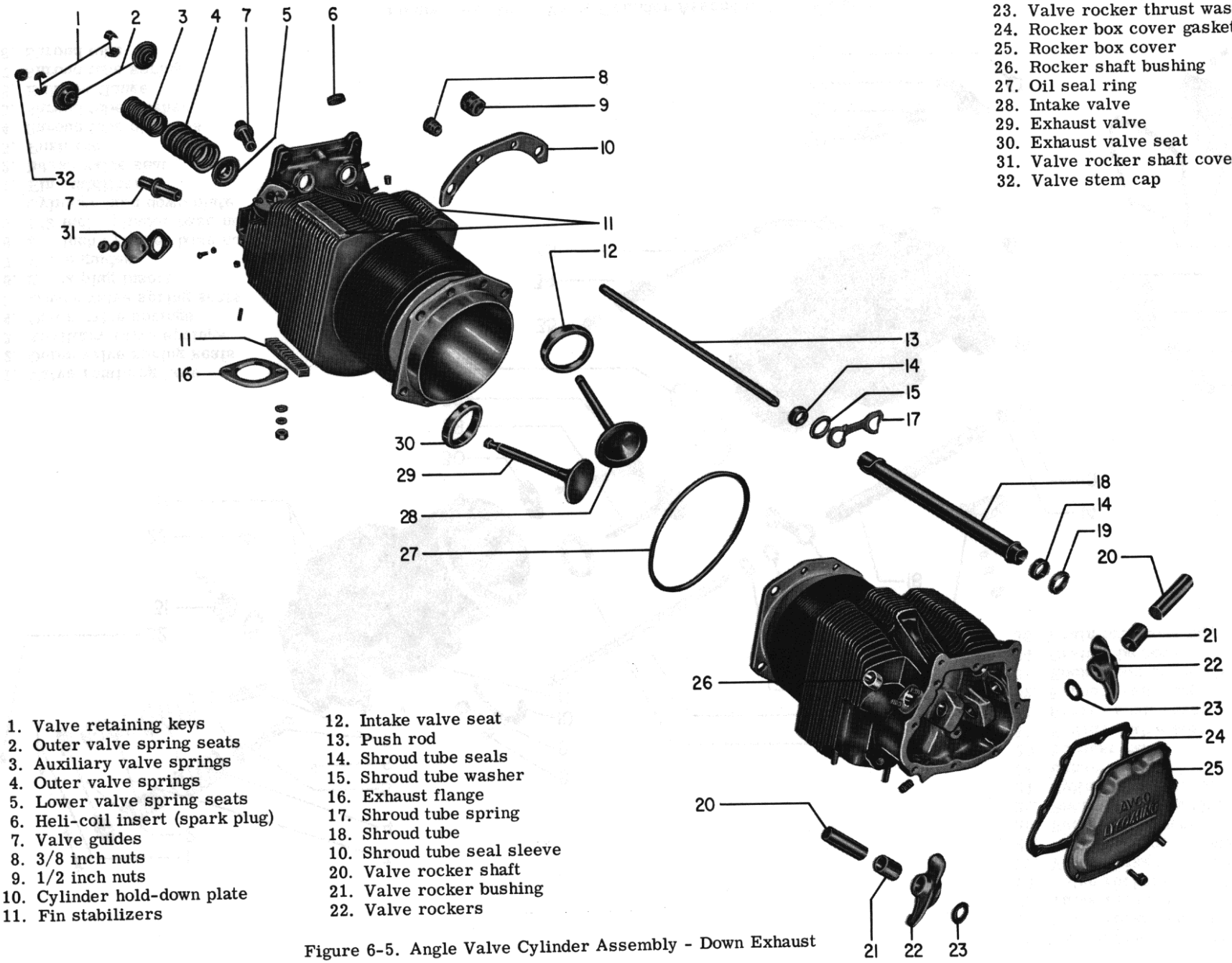

1. Valve retaining keys
2. Outer valve spring seats
3. Auxiliary valve springs
4. Outer valve springs
5. Lower valve spring seats
6. Heli-coil insert (spark plug)
7. Valve guides
8. 3/8 inch nuts
9. 1/2 inch nuts
10. Cylinder hold-down plate
11. Fin stabilizers
12. Intake valve seat
13. Push rod
14. Shroud tube seals
15. Shroud tube washer
16. Exhaust flange
17. Shroud tube spring
18. Shroud tube
10. Shroud tube seal sleeve
20. Valve rocker shaft
21. Valve rocker bushing
22. Valve rockers
23. Valve rocker thrust washer
24. Rocker box cover gasket
25. Rocker box cover
26. Rocker shaft bushing
27. Oil seal ring
28. Intake valve
29. Exhaust valve
30. Exhaust valve seat
31. Valve rocker shaft cover
32. Valve stem cap

Figure 6-5. Angle Valve Cylinder Assembly - Down Exhaust

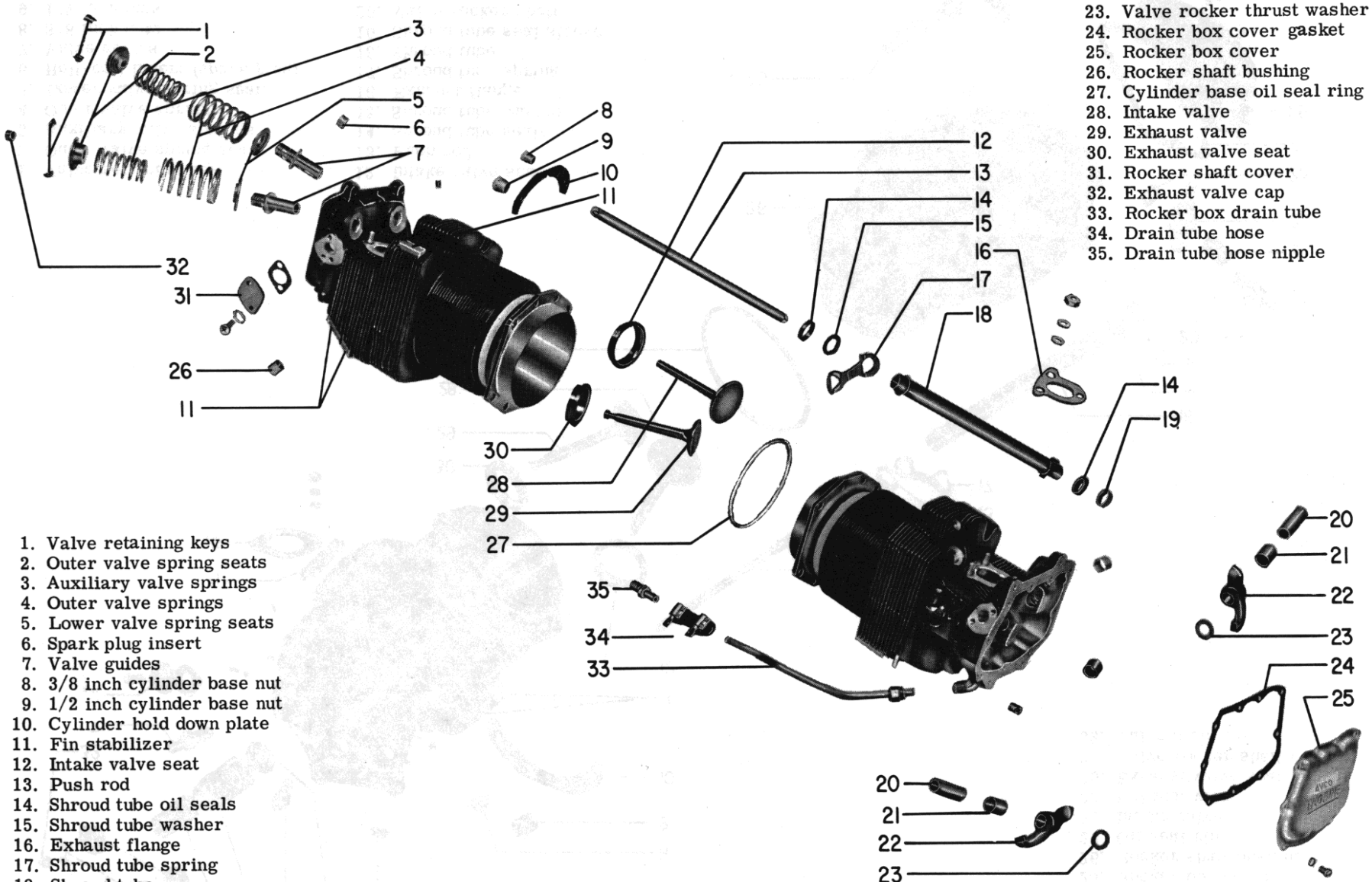

1. Valve retaining keys
2. Outer valve spring seats
3. Auxiliary valve springs
4. Outer valve springs
5. Lower valve spring seats
6. Spark plug insert
7. Valve guides
8. 3/8 inch cylinder base nut
9. 1/2 inch cylinder base nut
10. Cylinder hold down plate
11. Fin stabilizer
12. Intake valve seat
13. Push rod
14. Shroud tube oil seals
15. Shroud tube washer
16. Exhaust flange
17. Shroud tube spring
18. Shroud tube
19. Shroud tube seal sleeve
20. Valve rocker shafts
21. Valve rocker bushing
22. Valve rockers
23. Valve rocker thrust washer
24. Rocker box cover gasket
25. Rocker box cover
26. Rocker shaft bushing
27. Cylinder base oil seal ring
28. Intake valve
29. Exhaust valve
30. Exhaust valve seat
31. Rocker shaft cover
32. Exhaust valve cap
33. Rocker box drain tube
34. Drain tube hose
35. Drain tube hose nipple

Figure 6-6. Angle Valve Cylinder Assembly (Up Exhaust)

DISASSEMBLY

6-18. CYLINDER. Place cylinder over the cylinder holding block (64526-1, or -2), assemble valve spring compressor (ST-25) on cylinder, and compress valve springs far enough to remove the valve retaining keys.

NOTE

If keys are stuck tight in spring seat, a light blow with a leather mallet on top of compressor will release keys.

6-19. Remove all valve spring seats and springs from rocker box, keeping parts for each valve separate. Hold valves by the stems to keep them from dropping out of the cylinder, and remove cylinder from holding block. Now reach inside of cylinder and remove valves. If difficulty is experienced in pulling the tops of the valve stems through the valve guides, push the valves back in position and clean the carbon from the stems.

CAUTION

Do not drive the valves through the guides.

6-20. Place each valve, with its springs, seats and keys in its proper compartment of the cleaning and inspection basket (64553). No further disassembly of the cylinder is necessary unless inspection warrants the replacement of valve guides, valve seats, or primer nipple.

6-21. PISTONS. Using the piston ring expander (64528 or 64713), remove the rings from all pistons. Remove the rings in order, starting with the top ring and working down. Be careful not to scratch or score piston when removing rings.

6-22. HYDRAULIC TAPPETS. (See figure 6-9.) Push spring end of hydraulic tappet plunger, turn approximately one-quarter turn in clockwise direction and pull it from the cylinder. Do not further disassemble any parts of tappet assembly.

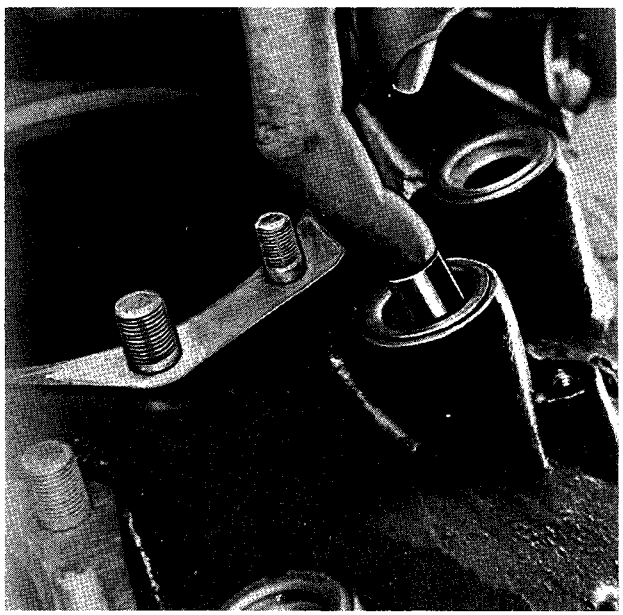

Figure 6-7. Removing Push Rod Socket

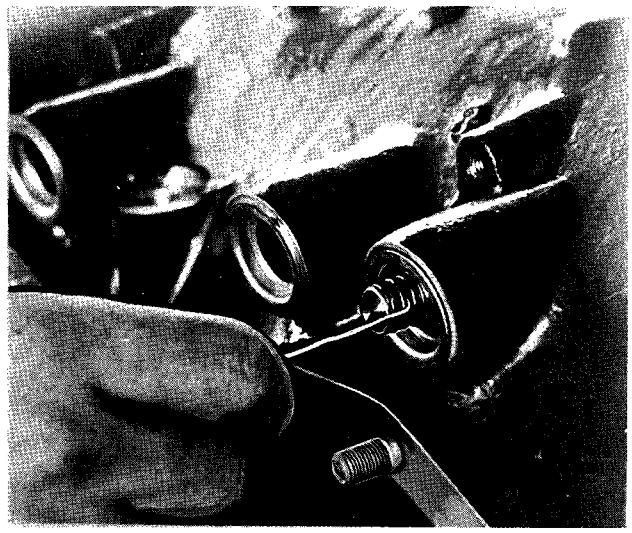

Figure 6-8. Removing Hydraulic Tappet Plunger Assembly

CAUTION

Keep plunger and cylinder of each assembly together. They are very closely and selectively fitted together during manufacture and are not interchangeable.

CLEANING

6-23. Clean all cylinder, piston and valve train parts in accordance with the general instructions described in Section III. Specific instructions follow:

6-24. HYDRAULIC TAPPETS. Use the cleaning basket in order to keep the valve operating mechanism parts separate. Dip the basket, with all parts contained in their proper compartment, in petroleum solvent. Hold the ball check valve in each plunger cylinder off its seat by inserting a light copper wire or other relatively soft material through the tube on the cylinder and wash thoroughly so that any dirt particles that may be under the ball seat will be washed out. After washing the parts of each hydraulic tappet assembly, replace the parts in the proper compartment of the cleaning basket.

CAUTION

It is imperative that various parts of each tappet assembly be kept together during the overhaul operations, in order that all component parts may be reassembled with their original mating parts and each completed assembly inserted in its original location in the crankcase. In the event parts are intermixed, discard, and install new assemblies.

INSPECTION

6-25. Inspect all cylinder, piston and valve train parts in accordance with the general instructions described in Section III. Specific instructions will be found in the following paragraphs, possible revisions will be found later in the section.

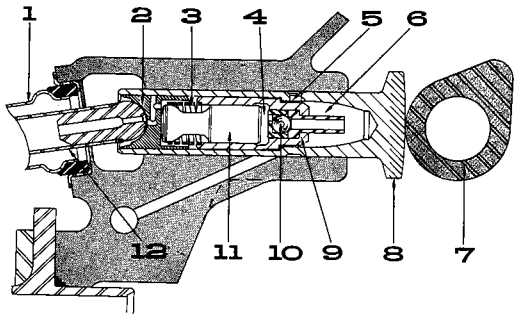

1. Shroud Tube
2. Push rod socket
3. Plunger spring
4. Oil pressure chamber
5. Oil hole
6. Oil supply chamber
7. Camshaft
8. Tappet body
9. Cylinder
10. Ball check valve
11. Plunger
12. Push rod

Figure 6-9 Diagram of Hydraulic Tappet

6-26. CYLINDER HEAD (VISUAL INSPECTION). Examine the cylinder head thoroughly, checking for the following possible defects.

a. Loose, scored, pitted or otherwise damaged valve seats. (Mark for replacement.)

b. Loose or damaged studs. (Replace with 0.003, 0.007 or 0.012 oversize studs).

c. Loose or damaged spark plug heli-coil inserts. (Mark for replacement with oversize insert.)

d. Loose, cracked or scored valve guides. (Mark for replacement.)

e. Nicked, scored or dented mounting pads. (Intake and exhaust ports, rocker box covers.)

f. Cooling fins. The following standards shall prevail insofar as acceptance or rejection of cylinder heads are concerned.

1. Cracked fins.

(a) Fin adjacent to the exhaust port flange.

(1) Stop drilling, a 3/16 inch diameter hole through the end of the crack is permissible providing the end of the crack is at least 1/4 inch from the base of the metal.

(2) Fin removal to eliminate crack and reduce vibrating mass is permitted provided:

aa. Maximum removal is no more than one half the total fin width.

bb. Maximum removal is in accordance with figure 6-10.

cc. No burrs or sharp edges are permitted.

dd. Minimum fillet at the root of the removed portion of the fin is one quarter inch radius. Minimum corner at top of fin adjacent to the removed portion is one half inch radius.

(b) Fins other than the above may be accepted provided not more than one crack per fin and its depth is no closer than 1/4 inch from the base of the metal and a fin stabilizer is used to reduce vibration and further deepening of the crack.

2. Physically damaged, broken or bent fins.

(a) The blended area for any one fin shall not exceed 3/8 square inches, nor 3/8 inch in depth.

(b) No more than two blended areas on any one fin.

(c) No more than four blended fins on the push rod side of the head. No more than six blended fins on the anti-push rod side of the head.

(d) In addition to the above, it is recommended that a fluorescent penetrant inspection of the cylinder be made. Pay particular attention to the following areas.

(1) Between the 15th and 20th cylinder fin (counting from the top) on exhaust port side of cylinder.

(2) The area around the lower spark plug counterbore.

6-27. CYLINDER HEAD (DIMENSIONAL INSPECTION). Check the ID of each intake valve guide (it is recommended that exhaust valve guides be replaced at overhaul) with the flat plug rejection gage (ST-81). Check the diameter and out-of-roundness of the guide bore by checking with the gage at a minimum of two positions 90° apart. If the gage enters the guide at any of the positions tested, mark the guide for replacement. Check the ID of the rocker shaft bushings in the cylinder head, using the flat plug rejection gage (64613). Be sure to use the end of the gage marked "Cyl. Head". The opposite end, marked "Rocker Bushing" is 0.0015 inch larger in diameter by virtue of the greater wear limit allowed on the valve rocker bushing. As in the case of the valve guides, check for out-of-roundness by trying the gage at several different points on each diameter being checked.

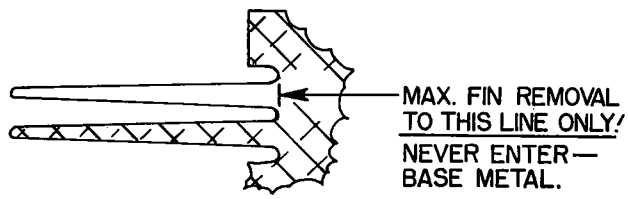

Figure 6-10. Maximum Fin Removal

6-28. CYLINDER BARREL (VISUAL INSPECTION). In addition to a thorough inspection of the cylinder barrel to ascertain its general condition, make the following specific checks:

a. Cooling Fins. It is recommended that notches or nicks be profiled with a hand grinder or file. A cracked cylinder barrel is cause for rejection of the cylinder.

b. Cylinder Skirt. Replace any cylinder having a bent, cracked or broken skirt.

c. Check mounting flange for cracks, nicks or warping.

d. Inspect interior of barrel for scoring or corrosion. Minor damage can be repaired by regrinding or honing; deep scoring or pitting, however, is cause for rejection of the cylinder.

e. Inspect interior of nitrided barrel for barrel glaze and a possible ring wear step at the point where the piston reverses travel at the top of the stroke. Repair of these items is fully described in service Instruction No. 1047.

6-29. CYLINDER BARREL (DIMENSIONAL INSPECTION). Dimensional inspection of the barrel consists of the following measurements (the numbers in parenthesis refer to the applicable reference numbers in the Table of Limits):

a. Fit between piston skirt and cylinder (519).

b. Maximum taper of cylinder walls (520).

c. Maximum out-of-roundness (521).

d. Bore diameter (522).

NOTE

All measurements involving cylinder barrel diameters must be taken at a minimum of two positions 90° apart in the particular plane being measured. All measurements of nitrided barrels must be made in the straight portion below the starting point of the choke, or at least two inches below the top of the barrel.

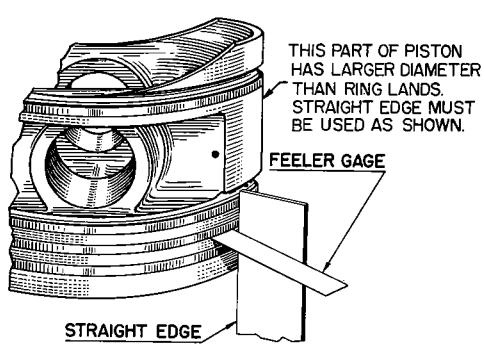

Figure 6-11. Method of Checking Piston Ring Side Clearance

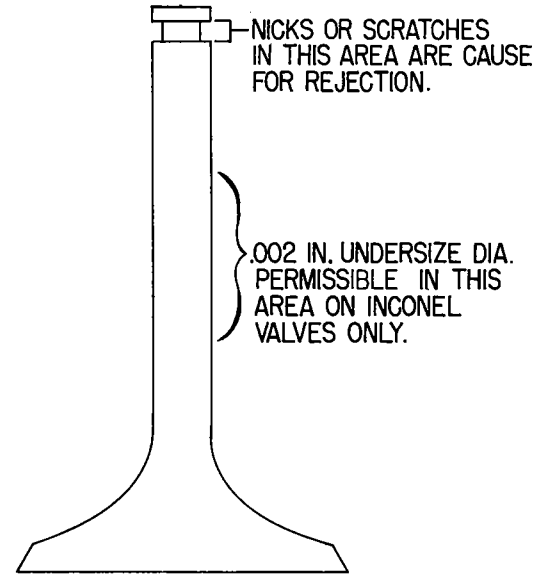

Figure 6-12. Area to Inspect Valve Stems

6-30. CYLINDER HOLD DOWN PLATE. The cylinder hold down plate must be flat within 0.003 inch when clamped with five pound pressure to a perfectly flat surface. If the plate is distorted or warped more than 0.003 inch, it must be replaced.

6-31. PISTON (VISUAL INSPECTION). Examine the top of the piston for excessive pitting, cavaties or surface distortion. The latter may be evidence of detonation, particularly if the piston has been in service for a relatively short time. Other critical points which must receive thorough visual examination are the piston ring lands and grooves, piston pin holes, and piston pin holes bosses.

6-32. PISTON (DIMENSIONAL INSPECTION). Make the following dimensional checks on each piston (the numbers in parenthesis refer to the applicable reference numbers in the Table of Limits.

a. Side clearance between piston ring and piston (514, 515, 516 and 517). Pistons for Avco Lycoming opposed engines are ground with a slight taper from the skirt to the head, with the exception of the lands between the top compression and oil control rings, which are ground parallel. The clearance on wedge type compression rings therefore, must be measured as shown in figure-6-11 in order to obtain a true check of the side clearance.

b. Inside diameter of piston pin hole (512).

c. Clearance between piston skirt and cylinder and piston diameter at top and bottom (519).

6-33. PISTON PIN AND PISTON PIN PLUGS. Check OD of piston pin against ID of hole in piston (reference 512, Table of Limits). Measure fit between piston and plugs and check OD of plugs (reference 513, Table of Limits). Examine interior surfaces of piston pin for corrosion or pitting.

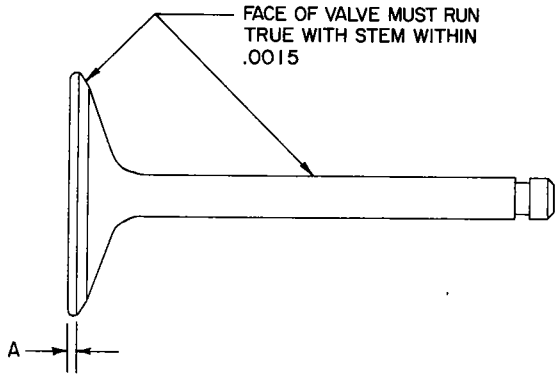

Figure 6-13. Valve Showing Locations for Checking Run-Out and Section for Measuring Edge Thickness

6-34. VALVE ROCKERS. Damaged, badly worn, pitted or scored tips and push rod sockets warrant replacement of the rocker. Check the ID of the rocker bushing at several different positions with a flat plug rejection gage (64613). This is a double-end gage; be sure to use the end marked "Rocker Bushing". If the gage enters the bushing at any point, mark the bushing for replacement.

6-35. PUSH RODS. Inspect push rods for wear or looseness of ball ends. If ball ends are loose, replace the rod. Rod must be straight within . 010 inch.

6-36. VALVES. Remove the valves from the cylinder and clean to remove soft carbon and examine visually for physical damage, damage due to burning or corrosion. Valves that indicate damage of this nature must not be released.

NOTE

Exhaust valves (except Inconel exhaust valves) should never be reused. Inconel exhaust valves may be reused if they comply with requirements of the following inspection.

6-37. Do not reuse valve in which stem diameter midway of valve measures less than that measured at the key end; excepting inconel valves which may be 0. 002 inch undersize on stem diameter as shown in figure 6-12.

6-38. Check runout of valve face. See figure 6-13. Total runout must not exceed . 0015 inch. Do not reuse any valves that exceed this limit.

6-39. Measure edge thickness of intake valve heads. See figure 6-13. If, after refacing, "A" is less than the limit shown in Table VI-I, the valve must not be reused.

NOTE

The edge of intake valve heads are generally formed as shown in figure 6-14. The thickness "A" can best be measured with an optical comparator; however, it can be measured with sufficient accuracy by means of a dial indicator and a surface plate, as shown in figure 6-15.

6-40. Using an optical magnifier, examing the valve in the stem area and the tip for evidence of cracks, nicks, tool marks, or other indications of damage. Damage of this nature seriously weakens the valve, making it liable to failure. Any valve having a nick, with ragged edges more than 1/16 inch in length should not be reused. A nick or tool mark of any sort in the keeper groove of an exhaust valve is sufficient reason for not reusing the valve. See figure 6-12.

6-41. If superficial nicks and scratches in the valve indicate that the valve might be cracked, it should be inspected by a magnetic particle or dye penetrant method. Dye penetrant procedures should be carried out strictly within the recommendations of the manufacturer of the penetrant.

TABLE VI-I

Intake Valve Part No.	Min. Permissible Edge Thickness	Engine Series
60037 66429 LW-11901	. 040 inch	O-235, O-290-D O-435-A
67905	. 050 inch	O-290-D2, O-320, O-360, IO-360, VO-360, O-540
73938	. 060 inch	O-290-D2, O-320, AIO-320, IO-320, LIO-320, O-340, O-360, IO-360, HO-360, HIO-360, IVO-360, VO-360, O-540, IO-540, TIO-540
73129 LW-13622	. 075 inch	IO-360, LIO-360, AIO-360, IO-540, TIO-540, LTIO-540,
67518 71953 72612 73117 73876	. 085 inch	IO-360, HIO-360, TIO-360, IO-540, IO-720

6-42. Critical areas include the face and tip both of which should be examined for pitting and excessive wear. Minor pitting on valve faces can sometimes be removed by regrinding; otherwise the valve should be rejected. Replace any valve that has operated with a collapsed hydraulic tappet, regardless of the number

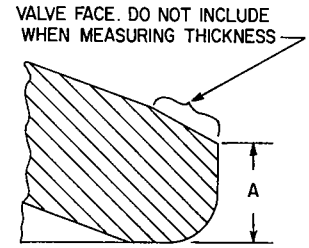

Figure 6-14. Section Through Edge of Valve

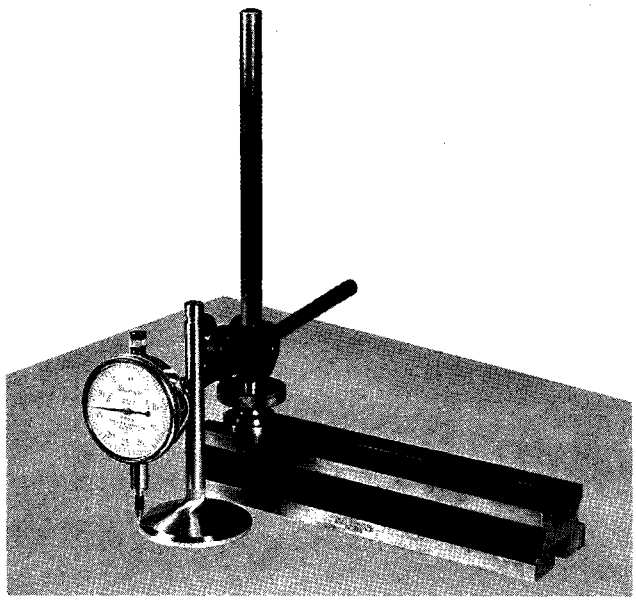

Figure 6-15. Method of Checking Valve Edge Thickness with Dial Indicator

of hours on the valve. (See inspection of hydraulic tappets.) Check the clearance between the valve stem and guide (reference 528, Table of Limits for exhaust valves, and reference 529 for intake valves).

6-43. HYDRAULIC TAPPET BODIES. If for any reason a new camshaft is to be installed in the engine, or the cam lobes are conditioned by regrinding, all of the tappet bodies must be discarded and replaced with new tappet bodies.

6-44. Check the tappet bodies for identification. Those bodies with no identification marks as shown in figure 6-16 must be discarded.

6-45. Check the face of the tappet body for signs of spalling or pitting (figure 6-17). Any face which shows this condition is cause for rejection, and the tappet body must be replaced with a new tappet body. It is recommended that a magnifying glass (min., 10 power) be used for this purpose.

6-46. When a tappet body is rejected because of spalling, a visual inspection of the nose of the cam lobe with a magnifying glass (min. 10 power) must be made.

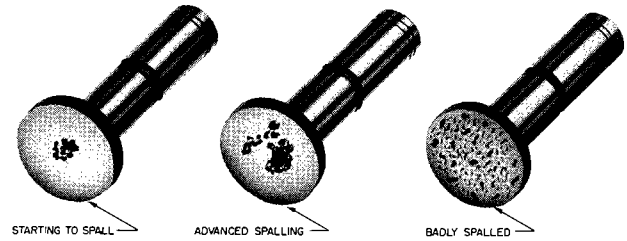

Figure 6-17. Appearance of Spalling Marks on Face of Hydraulic Tappet Bodies

Any indication of distress, surface irregularity or feathering at the edge of the lobe is cause for rejection of the camshaft.

NOTE

Each tappet face will have one or two Rockwell marks (figure 6-18) which is not cause for rejection, and this is not to be confused with a spalled or pitted condition as shown in figure 6-17.

6-47. Circular wear patterns on the face of the tappet body are also cause for rejection of the part. Each face may have circular discoloration due to rotation of the body which is not cause for rejection, however, if the surface has a wavy appearance the part should be rejected (figure 6-19).

6-48. Examine the interior of the bore in the tappet body using a small flashlight to illuminate the interior surfaces. If any appreciable amount of wear has occured at the interior shoulder (which serves as a seat for the plunger assembly) a feather or chipped edge will be visable around the shoulder (figure 6-20). The existence of this feather or chipped edge is cause for rejection of the entire tappet assembly.

6-49. Test the tappet body for structural failure through the use of the magnetic particle method. This requires a machine (which uses 440 line volts), a copper adapter and a holding fixture ST-387. The tappet bodies are inspected in the following manner:

a. Clean the edge of the face with medium grade sandpaper and any Ferrox coating (figure 6-22).

b. Place the tappet body in the holding fixture with the adapter inserted in the body.

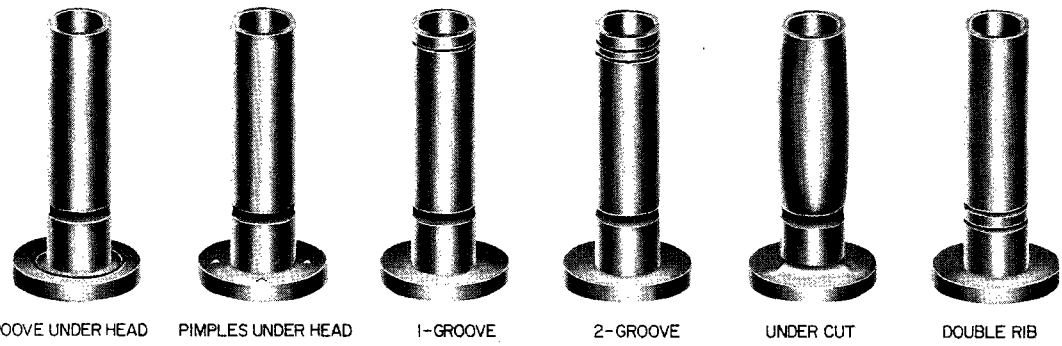

Figure 6-16. Identification of Hydraulic Tappet Bodies

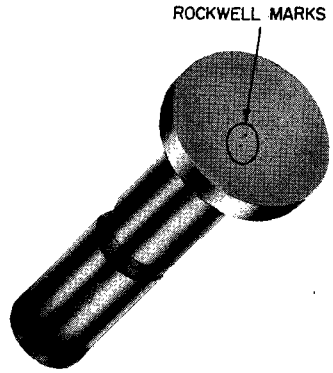

Figure 6-18. Rockwell Marks

c. Tighten to hold the assembly securely in the fixture.

d. Pass a current of 500 amps through the tappet body for 1/2 to 3/4 of a second while the solution is running over tappet body. Seams and cracks will be coated black and can be easily identified.

CAUTION

When it has been determined that a tappet body is serviceable, it must be installed in the same position from which it was removed. No attempt should be made to salvage rejected or marginal parts. Under no circumstances should the face of the tappet body be touched with abrasives as such a practice will result in early failure.

6-50. HYDRAULIC PLUNGER ASSEMBLY. Various hydraulic plunger assemblies are used in subject engines. (Consult Service Instruction No. 1011). These assemblies are differentiated by the leakdown rate. At disassembly of the engine check the P/N on the hydraulic plunger assembly. Hydraulic plunger assemblies must be used in sets and it is not permissible to mix assemblies in the same engine. It is recommended the following procedure be followed at overhaul:

CAUTION

All parts of each hydraulic plunger assembly are selectively fitted and these parts are not interchangeable. It is imperative that mating parts be kept together and not with other assemblies. If any doubt exists as to whether the parts have become mixed, install new hydraulic plunger assemblies.

6-51. As the hydraulic plunger assemblies are removed from the engine, check for chipping of the seating shoulder (figure 6-23).

6-52. Line the hydraulic plunger assemblies side by side on a flat surface and lay a straight edge across the shoulder surface (figure 6-24). Any plunger assembly that is more than 1/32 inch below the straight edge is "collapsed" and must be rejected.

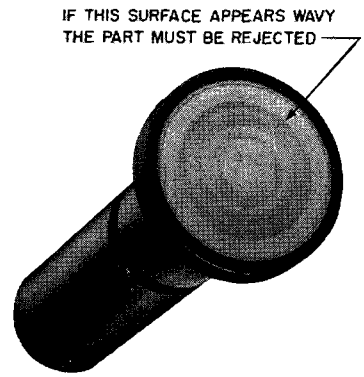

Figure 6-19. Circular Wear Pattern on Face of Hydraulic Tappet Body

6-53. Make a visual inspection of the body of the plunger assembly for cracks.

CAUTION

Although the tappet body may be submitted to the magnetic particle method, at no time is it permissible to submit any part of the hydrualic plunger assembly to this method.

6-54. The hydraulic plunger assembly may now be cleaned with clean solvent and then backflushed with clean solvent.

6-55. Check the plunger assembly for a leaking check valve in the following manner:

a. Dip the plunger in light machine or engine oil. (Extra fast leakdown only. All other plunger assemblies must be checked dry.)

b. Hold the hydraulic cylinder between the thumb and middle finger in a vertical position with one hand; then place the plunger in position so that it just enters the cylinder (figure 6-25).

c. Depress the plunger quickly with the index finger and if the plunger bounces back, the unit may be considered satisfactory.

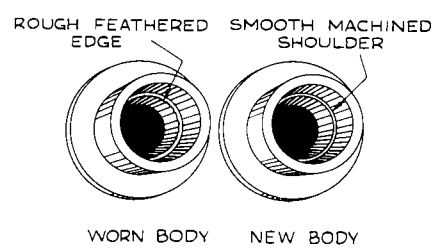

Figure 6-20. Appearance of Interior Shoulder in New and Worn Tappet Bodies

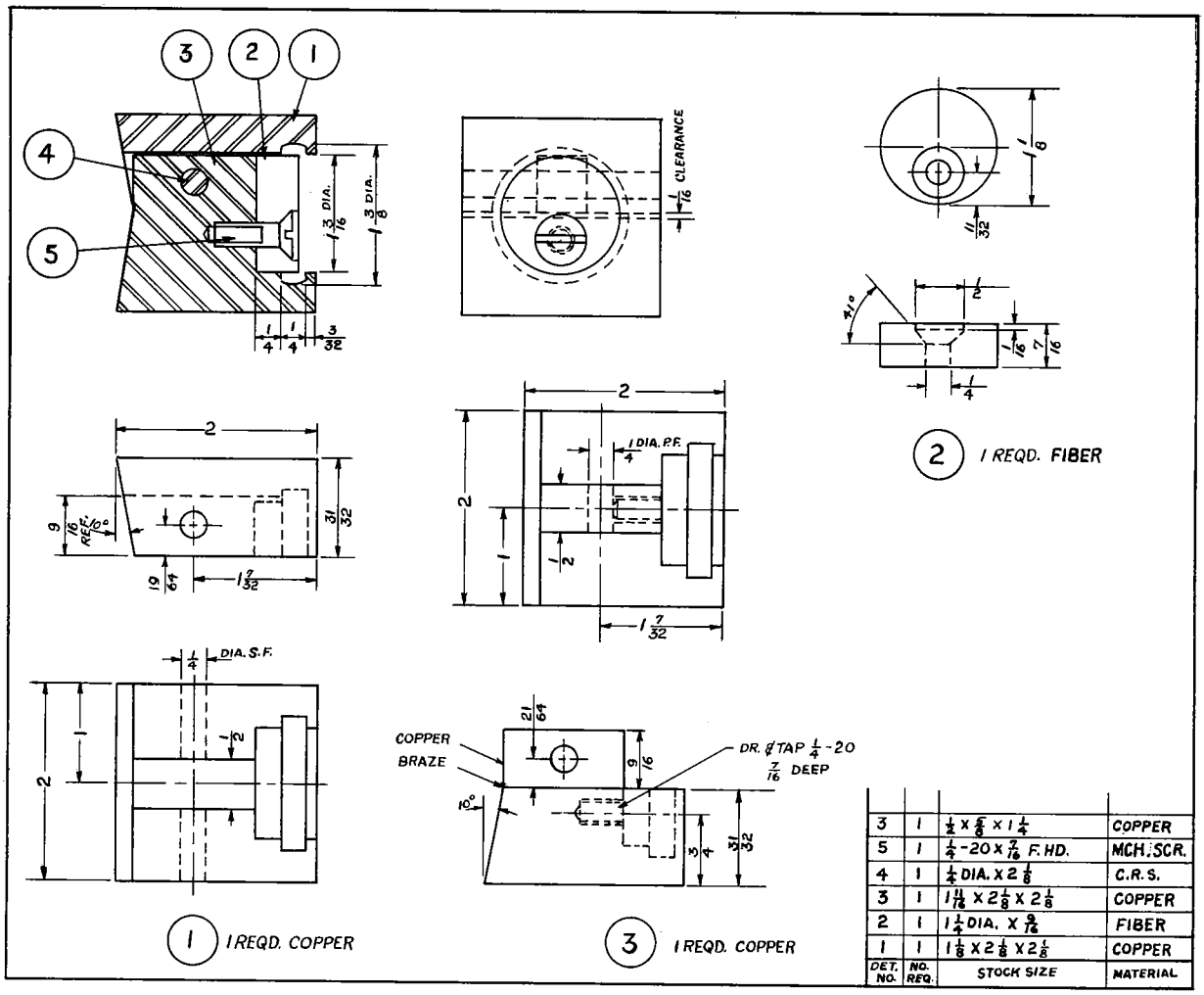

DET. NO.	NO. REQ.	STOCK SIZE	MATERIAL
3	1	1/2 X 5/8 X 1 1/4	COPPER
5	1	1/4-20 X 7/16 F.HD.	MCH. SCR.
4	1	1/4 DIA. X 2 1/8	C.R.S.
3	1	1 11/16 X 2 1/8 X 2 1/8	COPPER
2	1	1 1/4 DIA. X 9/16	FIBER
1	1	1 1/8 X 2 1/8 X 2 1/8	COPPER

Figure 6-21. Dimensions for Making Holding Fixture

d. When the plunger does not bounce back but remains collapsed, it is an indication that the ball check valve is not seating properly. When this condition exists, the hydraulic plunger assembly is defective and must be replaced.

NOTE

When an intake or exhaust valve hydraulic plunger assembly has proven to be defective, the valve itself must be replaced as well as the hydraulic plunger assembly.

6-56. To assemble the unit, unseat the ball by inserting a thin clean bronze wire through the oil inlet hole. With the ball off its seat, insert the plunger and twist clockwise so that the spring catches.

6-57. DETECTION OF MAGNETIZED HYDRAULIC PLUNGER ASSEMBLIES. If the parts of ths plunger assembly become magnetized the plunger may remain in a collapsed position. Check the parts for magnetization with a compass or small iron wire. In the event that any of the parts are magnetized, the plunger assembly must be replaced.

6-58. VALVE SPRINGS. Check the condition of all valve springs on a suitable spring tester, using the loads and deflections as given in references 800 and 801, Table of Limits.

MODIFICATIONS

6-59. Several modifications have been made to various installations of the subject engines. It is suggested that the following publications be consulted to ascertain whether or not your particular installation has been affected. Avco Lycoming Service Bulletin No. 253 and 273. Avco Lycoming Service Instruction No. 1035, 1073, 1123, 1135, 1136, 1262, 1280 and 1302.

REPAIR AND REPLACEMENT

6-60. General instructions for the repair of cylinder, piston and valve train parts will be found in Section III. Specific Instructions follow.

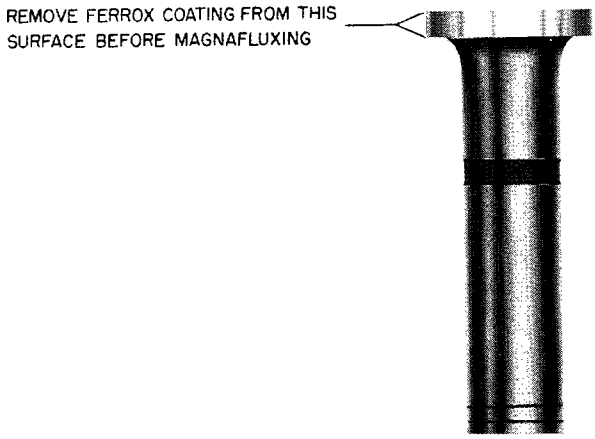

Figure 6-22. Surface to be Cleaned of Ferrox Coating

6-61. SPARK PLUG THREAD INSERT. Spark plug thread inserts which were rejected during inspection are removed and replaced as described in the following paragraphs.

6-62. Insert the extracting tool (64595) in the spark plug hole so that the edges of the tool cut into the top thread of the insert. Rotate the tool in a counter-clockwise direction, unscrewing the insert from the hole.

6-63. A new insert may be installed by use of the inserting tool (64594). Withdraw the mandrel part of the tool beyond the recessed section of its sleeve. The insert may then be assembled into the recess and the mandrel advanced to engage its slotted end with the tang of the insert. Rotate the mandrel clockwise and press forward slightly; this will engage the insert in threaded end of sleeve. Continue to rotate the mandrel while holding the sleeve thus securing the insert firmly on the inserting tool. The insert may then be wound through the threaded portion of the sleeve within one half turn from the end of the coil.

6-64. The adjustable brass screw on the sleeve tends to act as a brake, preventing the insert from unwinding. It is important that the insert be kept tight on the mandrel to facilitate its assembly in the threads of the cylinder head. The insert should be wound so that the adjacent turns of the insert are in contact with each other. This will eliminate the possibility of crossed threads.

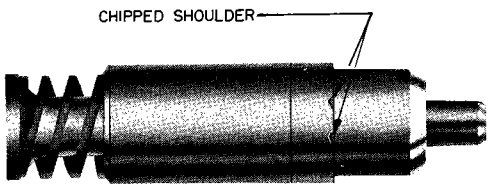

Figure 6-23. Chipped Shoulder

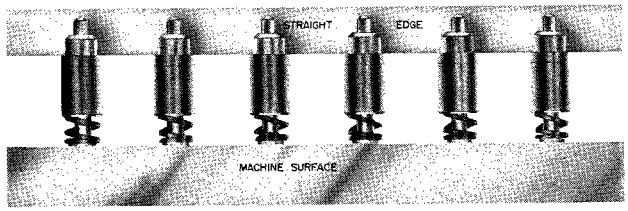

Figure 6-24. Checking Plunger Assembly

NOTE

When inspection reveals the necessity of replacing a spark plug heli-coil insert, it must be replaced with a .010 inch oversize insert. A .010 inch bottoming tap (64596-1) is available.

6-65. When screwing the insert into the hole in the cylinder head, be sure that the first coil picks up the first thread. As the tool is turned, the insert will advance into the hole. When the face of the sleeve is approximately 1/16 inch from the face of the boss, the inserting tool should be held tightly by the handle and the sleeve rotated counter-clockwise with the other hand, freeing the left half-turn of the insert. By sliding the sleeve toward the top of the mandrel, the end of the insert can be seen projecting above the boss. The mandrel should then be rotated in a clockwise direction until the insert disappears from sight. When this position is reached, the turning action should be stopped and the tool withdrawn. The top of the insert will be approximately one half turn from the face of the boss. However, if it is not, the tool should be reassembled and the insert turned until it is about one half turn from the face of the boss.

6-66. The tang of the insert can be broken off with needle-nose pliers at the location of the notch. Then

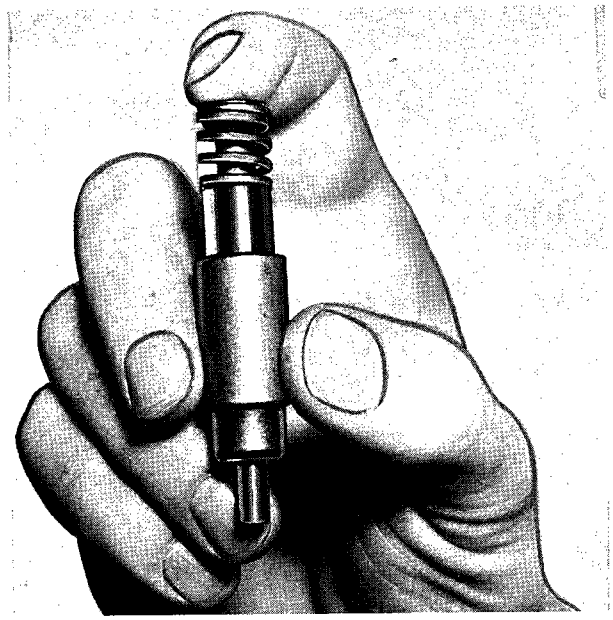

Figure 6-25. Checking Hydraulic Plunger Assembly for Leaks

using the expanding tool (P/N 64593), secure the insert firmly in the spark plug holes. The limit of expansion can be kept within the thread gage limits by fixing the stop nut on the expanding tool at the correct position. After expanding the insert, it may be staked by assembling the staking sleeve over the mandrel until the sleeve meets the boss. A slight blow on the top of the sleeve will impress a slight chamfered edge around the periphery of the tapped hole. The staking sleeve may then be removed and adjusting screw released, and the expanding mandrel removed from the insert.

6-67. GRINDING VALVE SEATS. See Figure 6-26. The ID of the valve guide is used as a piloting surface for all valve seat reconditioning operations. Grind valve seats, using suitable grinding equipment, to 30° angle on intake valve seats and 45° angle on exhaust valve seats. Grind to the dimensions called out in Figure 6-26. Proceed in the following manner:

6-68. On intake valve seats, use a 15° grinding wheel to grind the top surfaces of the valve seat to produce the outer face diameter (dimension “A”). Bring the face of the intake valve seats to the specified width (dimension “C”) by narrowing the throat with a 75° wheel.

6-69. On exhaust valve seats, use a 15° grinding wheel to grind the top surface of the valve seats to produce the outer face diameter (dimension “B”). The width of the exhaust valve seats should now conform to dimension “D”.

6-70. If seat wear has progressed to the extent that the entire face of the 15° narrowing wheel must be brought into contact with the seat in order to achieve the specified diameter, the seat must be replaced. (See Figure 6-27).

6-71. VALVE SEAT REMOVAL AND REPLACEMENT. Valve seats that are loose, damaged or worn to the extent that they cannot be reground to the dimensions shown in Figure 6-26 must be replaced.

NOTE

When it is necessary to replace intake or exhaust valve seats, the recess in the cylinder head must be cut .010, .020 or .030 oversize and the corresponding oversize seat installed.

6-72. VALVE SEATS. The “Flat” type seat employed on some earlier series engines differs from the “Allison” type seat employed on all current subject engines. See Figure 6-28 for sectional views of both seats. These seats are not interchangeable.

6-73. Place the applicable valve seat replacement fixture on a suitable surface and fasten securely. Fabricate a removal tool in accordance with the materials and dimensions shown in Figure 6-29.

6-74. Heat cylinder to a temperature of 600°F and secure to fixture. Soak the sponge of the removal tool in cold water. Insert the tool down through the valve seat, the seat will shrink and cling to the sponge. Withdraw the tool being careful not to cock the seat. This entire procedure should be performed as swiftly as possible after removing the cylinder from the heat.

6-75. Measure the I.D. of the valve seat recess in the cylinder head. Compare the measurement with the original manufactured diameter of the recess (see Table of Limits) and determine which oversize seat is to be installed.

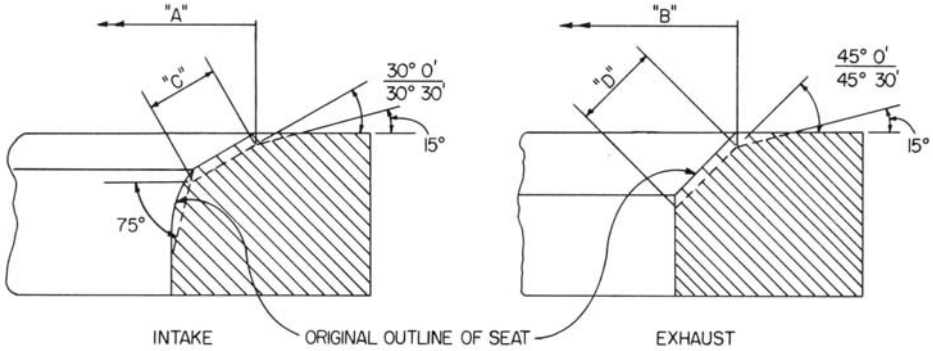

MODEL	“A” (INTAKE)	“B” (EXHAUST)	“C” (INTAKE)	“D” (EXHAUST)
All parallel valve head cylinder assemblies (except O-235-C, O-290-D, O-435-A)	2.145/2.155	1.740/1.750	.076/.117	.058/.077
O-235-C	1.965/1.975	1.722/1.732	.032/.067	.091/.106
All O-290-D, O-435-A	2.013/2.023	1.740/1.750	.076/.117	.058/.077
All angle valve head cylinder assys.	2.334/2.344	1.816/1.826	.074/.093	.091/.106

Figure 6-26. Valve Seat Dimensions for Reconditioning

TABLE VI-II

VALVE SEAT REPLACEMENT TOOLS

VALVE SEAT RECESS CUTTER

ID Valve Seat Hole in Cylinder Head	Part No.
2.280-2.281	ST-51-1, -2, -3
1.733-1.735	ST-52-1, -2, -3
2.073-2.075	ST-53-1, -2, -3
1.926-1.928	ST-54-1, -2, -3
1.918-1.920	ST-56-1, -2, -3
2.087-2.089	ST-57-1, -2, -3
1.994-1.996	ST-58-1, -2, -3

-1 Indicates .010 inch oversize
-2 Indicates .020 inch oversize
-3 Indicates .030 inch oversize

VALVE SEAT RECESS CUTTER PILOT

ID Valve Guide Hole in Cylinder Head	Part No.
.5913-.5923	ST-66, -1, -2, -3, -5
.6613-.6623	ST-67, -1, -2, -3, -5
.6247-.6257	ST-68, -1, -2, -3, -5

ST-66 is standard
-1 Indicates .010 inch oversize
-2 Indicates .020 inch oversize

ST-66 is standard
-3 Indicates .030 inch oversize
-5 Indicates .005 inch oversize

VALVE SEAT REPLACEMENT DRIFT

ID of Valve Seat	Part No.
1.870-2.060	ST-64
1.474-1.730	ST-65

VALVE SEAT REPLACEMENT FIXTURE

	Part No.
Parallel Valve Cylinder Heads	64520
Angle Valve Cylinder Heads	64696

VALVE SEAT RECESS CUTTER DRIVER

	Part No.
Used with all ST-series cutters	ST-62
Hand drive adapter	ST-63

6-76. Refer to Table VI-II and select the proper cutter and pilot. Install the pilot in the cutter, tighten and install cutter in special drive. Install on drill press and proceed to cut the recess in the cylinder heat to proper size. Note that the pilot engages the ID of the valve guide hole in the cylinder head. Remove no more metal from the bottom of the recess than is necessary to clean up the major diameter.

6-77. In the event the seats are to be cut by hand, install the hand drive adapter over the special drive and using a "T" handle proceed to cut the recesses as described in the proceding paragraph.

6-78. Heat cylinder to 600° to 650°F. (315° to 343° C.) and secure to applicable replacement fixture. Place new seat on replacement drift (refer to Table VI-II for correct drift) and drive seat into the recess in the cylinder head by tapping end of drift with hammer.

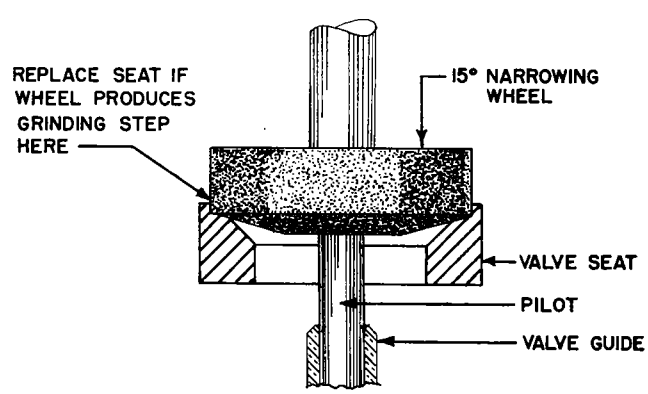

Figure 6-27. Rejection of Valve Seat

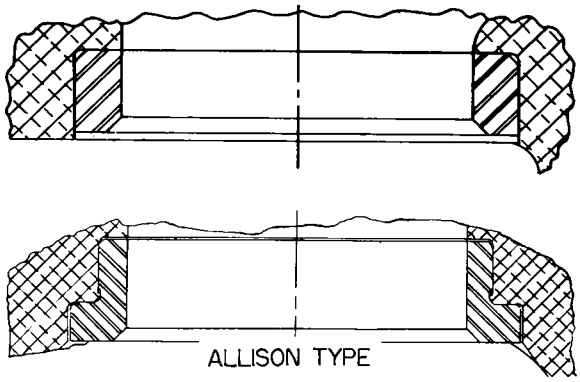

Figure 6-29. Difference Between "Flat" and "Allison" Type Valve Seat

6-79. Proceed to grind the faces of the newly installed valve seats as described in paragraphs 6-67 through 6-69.

NOTE

Whenever a new valve seat is installed, it is required that its matching valve guide be replaced. This will assure concentric grinding of the new seat.

6-80. VALVE REFACING. Place valve in a suitable valve refacing machine (Snap-On VR-300) or equivalent. Set refacer to 30° for intake valves and 45° for exhaust valves. Using a soft #80 grit wheel, remove no more metal than is necessary to clean up pits in the valve face or to correct any apparent warping condition. Round off with a hand stone any sharp or burred edges left around the valve face after refacing; this is best accomplished while valve is turning in the refacing machine.

6-81. VALVE GUIDE REPLACEMENT. Damaged or worn valve guides are removed and new guides installed in accordance with the procedures described in the following paragraphs.

6-82. VALVE GUIDE REMOVAL. Screw the nut of valve guide puller (ST-49) to the head of bolt (3/4-16). Place the retainer over valve guide inside of rocker box. Insert the bolt (3/4-16) into the retainer and valve guide. From cylinder barrel end insert the bolt (3/8-24) into the end of the 3/4 inch bolt. Tighten the 3/8 bolt until snug against the valve guide. Turn the nut in rocker box in a clockwise direction until valve guide is out of cylinder head.

6-83. VALVE GUIDE SELECTION. Check each valve guide hole in the cylinder head with the applicable valve guide hole plug gage. (See Table VI-III). Determine if the same size guide may be used or whether the next oversize guide is required.

6-84. VALVE GUIDE INSTALLATION. Mount the applicable valve guide replacement fixture (See Table VI-III) on a drill press table. Fasten cylinder securely in place on the fixture and set the fixture to the proper angle for the guide being installed. (11° 45 minutes for intake valve, 12° 40 minutes for exhaust valve).

6-85. If it has been determined that the next oversize guide is required, select the appropriate reamer (See Table VI-III) and proceed as follows. Mount the reamer in the drill press spindle and ream the valve guide hole in the cylinder head. Check the reamed hole with the corresponding gage (See Table VI-III).

6-86. Heat the cylinder to 350°F. -400°F. for a minimum of one hour. Place the new guide on the appropriate valve guide installation drift (See Table VI-III) and insert the guide in the hole in the cylinder head. Drive the guide to a firm seat with sharp hammer blows on the end of the drift. Allow the cylinder to cool. Ream the valve guide with the appropriate valve guide ID reamer and check the finished ID with the corresponding valve guide ID gage (See Table VI-III).

6-87. VALVE ROCKER THRUST WASHERS. Excessive side clearance between the valve rocker and cylinder head (reference 533, Table of Limits) caused by excessive wear on the inner rocker shaft support boss may be brought within limits in the following manner:

a. Use the inner rocker shaft spotfacer (64862) to clean up the surface of the inner rocker shaft support boss, removing no more metal than is necessary.

b. Select and fit any two of the three undersize washers that will bring the side clearance within the service limits.

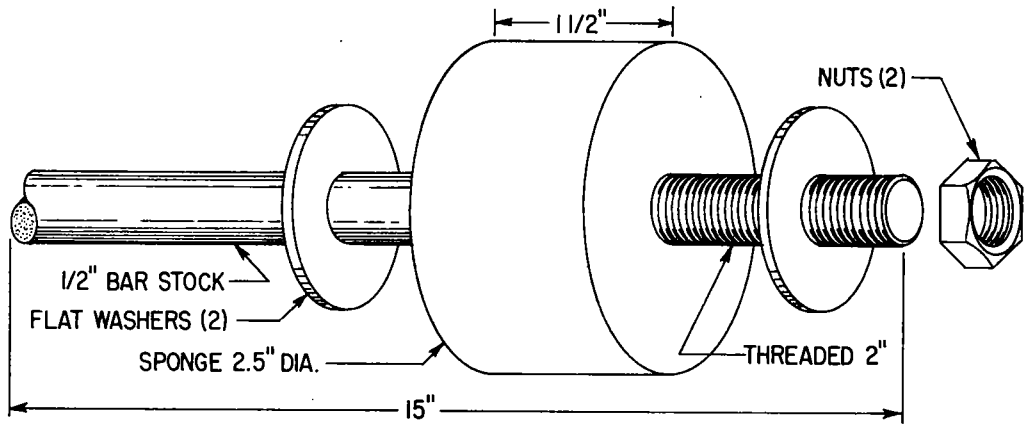

Figure 6-29. Valve Seat Removal Tool

TABLE VI-III

VALVE GUIDE REPLACEMENT TOOLS

GAGE	SIZE	REAMER
	Valve Guide Hole in Cylinder Head	
	(.5913/.5923 hole)	
64571	Standard	-------
64507	.005 oversize	64678-2
64509	.010 oversize	64678-3
64511	.020 oversize	64678-4
64639	.030 oversize	64678-5
	(.6247/.6257 hole)	
ST-89	Standard	-------
ST-89-5	.005 oversize	ST-90-5
ST-89-1	.010 oversize	ST-90-1
ST-89-2	.020 oversize	ST-90-2
ST-89-3	.030 oversize	ST-90-3
	(.6613/.6623 hole)	
64940	Standard	64924
64928	.005 oversize	64924-1
64929	.010 oversize	64924-2
64930	.020 oversize	64924-3
64931	.030 oversize	64924-4
	Valve Guide ID	
64514	All intake valves	64684
64514	.4040/.4050 exhaust valve	64684
64725	.4360/.4370 exhaust valve	64726
ST-26	.4370/.4380 exhaust valve	ST-27
64901	.4375/.4385 exhaust valve	64900
64927	.4985/.4995 exhaust valve (except ni-resist)	64925
64927	.4985/.4995 exhaust (Ni-resist) Pilot diameter	
	.4828/.4833	ST-113-1
	.4778/.4783	ST-113-2
ST-155	.4995/.5005 exhaust (Ni-resist) Pilot diameter	
	.4828/.4833	ST-143-1
	.4778/.4783	ST-143-2

REPLACEMENT FIXTURE

T/N	CYLINDER ASSEMBLY
64501	All 4-3/8" bore
64644	All 5-1/8" angle valve head
64714	All 5-1/8" parallel valve head

REPLACEMENT DRIFT

64505	All intake valve guides
64505	Valve guides with .4040/.4050 ID
64796	Valve guides with .4360/.4370, .4370/.4380, .4375/.4385 ID
64923	Valve guides with .4985/.4995, .4995/.5005 ID

6-88. REPLACEMENT OF VALVE ROCKER SHAFT BUSHING. On earlier models of some cylinder head assemblies the inner rocker shaft bushing was secured by a dowel pin. It will not be necessary to replace the dowel pin when the bushing is replaced. The dowel pin in this assembly is removed in the following manner:

6-89. Secure the cylinder to a suitable fixture on the workbench and insert the dowel hole drill jig (64808) beveled end up, through the outer bushing, securing it on the two valve rocker shaft cover studs. Bore out the dowel in the inner bushing with an 0.123/0.124 inch diameter drill.

6-90. (All Cylinders). Remove the outer and inner bushing using the rocker shaft bushing removal drift (64814).

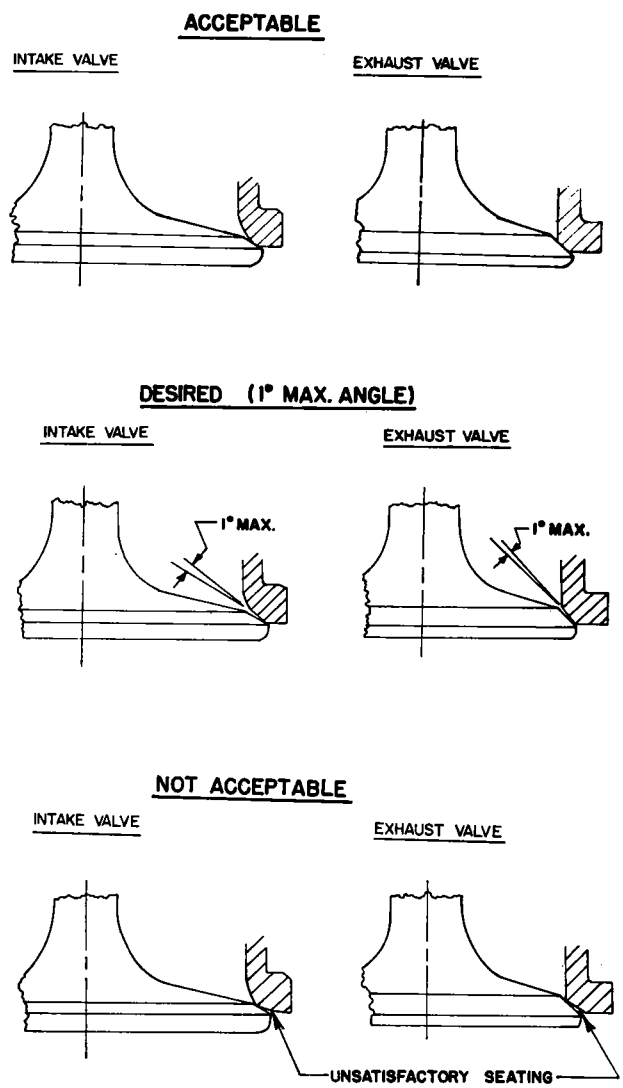

Figure 6-30. Acceptable, Desired and Not-Acceptable Valve Contact With Seat Face

6-91. Check each rocker shaft bushing hole in cylinder head with a standard plug gage (64810). If plug gage enters hole more than 1/8 inch an oversize rocker shaft bushing will be required. If the fit of plug gage in the hole is quite loose, it is evident that the bushing that was removed was an oversize bushing. Use the 0.005 oversize plug gage to determine what oversize bushing should be used for replacement. When the proper size replacement bushing has been determined, proceed to ream bushing hole in the cylinder head.

6-92. (Angle Valve Cylinder Heads.) Place the pilot of the outer rocker shaft bushing hole in cylinder head reamer (64812 or 64813) through the outer hole into the inner hole and proceed to ream the outer hole. Place the inner rocker shaft bushing hole in cylinder head reamer (64832 or 64833) through the outer hole and ream the inner hole. Clean cylinder and reamed holes thoroughly.

6-93. Parallel Valve Cylinders. Place the pilot of the rocker shaft bushing hole in cylinder head reamer (64838 or 64839) through the outer bushing and proceed to ream the parallel rocker shaft bushing holes. Clean the cylinder and reamed holes thoroughly.

6-94. Angle Valve Cylinders. Install new rocker shaft bushings in the following manner: place the stop of the outer rocker shaft bushing installation drift (64815) between the inner rocker shaft bushing boss and the outer rocker shaft bushing boss. Assemble new bushing on drift, insert drift pilot through boss into stop and tap bushing into place. Assemble the new bushing on the pilot of the inner rocker shaft bushing installation drift (64816) and position bushing and pilot. Insert drift through outer bushing into pilot and tap inner bushing into place.

6-95. Parallel Valve Cylinders. Install new rocker shaft bushings in the following manner: Place a new bushing on the driver of the inner rocker shaft bushing installation drift (64825) and locate bushing and driver in front of inner rocker shaft bushing hole in cylinder head. Insert the pilot of the inner rocker shaft bushing installation drift through the outer bushing hole and tap inner bushing in place. When installing the outer rocker shaft bushing, install the stop of the outer rocker shaft bushing installation drift (64824) between the inner and outer rocker shaft bushing holes in the cylinder head. Place a new bushing on the outer rocker shaft bushing installation drift and tap into place.

6-96. Angle Valve Cylinders. After installing new rocker shaft bushing in cylinder head, ream the bushing inside diameter. To do this, place the pilot of the outer rocker shaft bushing ID semi-finish reamer (64819) through the outer bushing. Place the inner rocker shaft bushing ID semi-finish reamer (64820) through the outer bushing and ream the inner bushing. Repeat the same procedure, this time using the outer and inner finish reamer (64821 and 64822). Check the finish ID hole in the rocker shaft bushings with the rocker shaft bushing ID plug gage (64823). Clean the cylinder and reamed hole thoroughly.

6-97. Parallel Valve Cylinders. After installing new rocker shaft bushings in cylinder head, place the pilot of the inner and outer rocker shaft bushing ID finish reamer (64826) through the outer bushing hole and ream the four bushings. Check the finished ID holes of the rocker shaft bushings with the rocker shaft bushing ID plug gage. Clean the cylinder and reamed holes thoroughly.

NOTE

After bushings have been reamed, they must be impregnated by immersing them for at least 15 minutes in engine oil that has been heated to 140°F. (60°C.).

6-98. Replacement of Valve Rocker Bushings. If valve rocker bushings are damaged or worn, they can be replaced in the following manner:

6-99. Place the valve rocker in position in the valve rocker holding fixture (64540) and, using a suitable drift, remove the bushing from the valve rocker.

6-100. Using a suitable arbor press, install a new bushing in the valve rocker. Make sure the oil hole in the bushing is aligned with the oil hole in the valve rocker.

6-101. Burnish the bushing by using an arbor press to pass the valve rocker bushing burnisher (64541) completely through the bushing. Remove the rocker from the fixture and check the finished ID with the valve rocker bushing finish ID gage.

6-102. Regrinding Cylinder Barrels. All unplated cylinder barrels which exceed allowable service limits in diameter, taper or out-of-roundness, must be reground to .010 or .020 oversize. Nitrided cylinder barrels employed on the O-360-B, -D and O-540-B low compression engines may be ground to .010 oversize. Do not attempt to regrind a barrel on light weight grinders such as block mounted automotive or similar type machine.

NOTE

Only the nitrided barrels employed on the series engines listed in the above paragraph may be reground oversize. All other nitrided barrels must be either re-barreled or reconditioned by chrome plating.

6-103. The oversize to which the cylinder is ground must be determined by adding 0.004 of an inch (clean up allowance) to the barrel diameter measured at the point of greatest wear. This measured addition should not exceed 0.002 of an inch per wall. The barrel is then ground to the oversize above this figure. Unplated barrels with wear exceeding .020 of an inch or applicable nitrided barrels with wear exceeding .010 of an inch must be replaced. See reference 522, Table of Limits.

6-104. The following data are included as a guide in selecting an efficient wheel and set up for grinding barrels to an oversize dimension.

A. Unplated Steel Barrels

1. Wheel

a. Friable Bond Material - 2A
b. Grain Size - 54
c. Grade -K
d. Structure - 5 porous
e. Vitrify Bond Treatment - V92
f. Diameter - 3-1/2 to 4 inches

2. Wheel Speed

a. 3-1/2 inch wheel - 5600 to 6000 surface feet per minute.
b. 4 inch wheel - 5350 to 5730 surface feet per minute.

3. Work Speed - 250 RPM

b. Nitrided Barrels

1. Wheel

a. Firable Bond Material - 1C
b. Grain Size - 54
c. Grade - H
d. Structure - 6
e. Vitrify Bond Treatment - V32
f. Diameter - 4 inches

2. Wheel Speed - 5350 to 5730 surface feet per minute.

3. Work Speed - 250 RPM

6-105. It is recommended that unplated steel barrels be ground to a surface finish of 25-35 micro-inches, nitrided barrels to 20-35 micro-inches. Such a finish can be obtained by grinding if the barrel diameter is brought to within 0.0005 to 0.001 inch of desired ID by roughing cuts. The wheel must then be redressed and the finished pass made. The wheel should then be allowed to run over the work four or five times. When setting up the job, make sure that the stops are arranged to prevent the edge of the wheel from running past the top of the barrel more than 1/8 of an inch. This protects the combustion chamber interior from damage.

6-106. Cylinders with barrels ground oversize must be fitted with corresponding oversize rings and pistons and identified as diredted in Service Instruction No. 1181.

6-107. In field service where one cylinder is worn beyond maximum limits, the worn cylinder and its opposite cylinder should be reground to the same oversize dimensions and oversize pistons and rings be used to maintain proper dynamic balance.

6-108. During complete engine overhaul when one or more cylinders require grinding, all cylinders should be ground to the same oversize dimension.

6-109. Reconditioning Nitrided Cylinder Barrels. Although only the series engines listed in paragraph 6-102 may be ground oversize, other nitrided barrels can be reconditioned by chrome plating or in some cases by re-barreling. Consult the latest edition of Service Instruction No. 1047 for information relative to reconditioning nitrided barrels.

6-110. Reconditioning Chrome Plated Barrels. Although it is not practical to remove wear steps by regrinding, such barrels can be restored by a stripping and replating process. Consult Service Instruction No. 1054 for facilities approved by Avco Lycoming to perform this chrome plating process.

6-111. Valve Repair. Repairs to valves are limited to removal of carbon, regrinding the face, and polishing superficial scratches. Bending processes, to straighten and puddling to restore the face must not be attempted.

6-112. Warped Exhaust Flanges. If a warped exhaust flange is noted, the flange should be straightened by grinding.

6-113. Valve Rocker Shafts (O-290-D, -D2). Sharp edges on valve rocker shafts, caused by contact with the rocker box cover may occur on this series. These sharp edges may be removed as follows. Chuck the rocker shaft in a lathe or drill press. With emery paper backed by a rubber pad or block, polish out any sharp edges from the ends of the shaft. Finish polish with crocus cloth.

NOTE

Tag rocker assembly so it will be reassembled in the original position from which it was removed at tear-down.

REASSEMBLY

6-114. Assembly of Pistons. Using the piston ring expander, assemble the new rings on pistons in the order described in the following paragraphs.

NOTE

On chrome cylinder and O-235 cylinder, the scraper ring is installed with the scraper edge toward the top of the piston. All other cylinders, the scraper edge is installed toward the bottom of the piston.

6-115. (All Pistons). With the piston lying top up on the workbench, install the oil regulating ring equalizer in the first groove above the piston pin hole. Assemble the regulating ring over the equalizer with its gap 180° opposite the equalizer gap. Compress the assembly several times with the fingers to make sure the ring lies free and loose in the groove. Both the equalizer and the regulating ring are symmetrical and may be installed with either side upward.

6-116. Install compression rings in the remaining top grooves. The compression rings are etched on one side with the work "Top" and this side must be installed with this side toward the top of the piston.

6-117. (O-235-C). Invert the piston on the bench and install the scraper ring in the groove below the piston pin hole. Install the scraper ring with the scraping edge toward the top of the piston.

WARNING

Do not under any circumstances assemble chrome plated piston rings in a chrome plated cylinder barrel. If in doubt as to the proper combination of rings to be used, refer to the latest edition of Service Instruction No. 1037 or contact the Service Department, Avco Lycoming Division.

6-118. (All Pistons.) Upon completion of assembly of the piston rings, check the side clearance of the rings in the grooves. Use feeler gage and straight edge as shown in figure 6-11.

NOTE

Under no circumstances should oversize piston rings be used in chrome plated barrels.

6-119. Assembly of Cylinder. See figure 6-5. Coat the valve guides and valves with a pre-lubricant as described in paragraph 3-39. Insert the intake and exhaust valve in their respective guides. The intake valve can be identified by the fact that it is slightly larger than the exhaust valve. Hold the ends of the valve stems and place the cylinder on the applicable cylinder holding block. Install on each valve a lower spring seat (5), outer and auxiliary valve spring (4 and 3), and outer valve spring seat (2).

NOTE

Assemble the dampener ends of springs (close wound coils marked with dye or lacquer) downward or next to lower spring seats.

6-120. Compress the valve springs with the valve spring compressor and assemble the valve retaining keys. If the valve is not seated properly the valve may be seated by using a wooden hammer handle against the tip of valve stem and hitting hammer with palm of hand. No other means should be used.

NOTE

Sodium-cooled exhaust valves are assembled with special keys and caps (32). Do not install caps until just before valve rockers are installed.

6-121. Installation of Pistons and Cylinders. See that all preservative oil accumulation on cylinder and piston assemblies is washed off with solvent and thoroughly dried with compressed air. Insert valve rocker shafts in their bores in the rocker box. Immediately prior to assembly of piston and cylinder to the engine, space the rings correctly and apply a generous coating of the oil mixture described in paragraph 3-39. Apply to the inside of the cylinder barrel and to piston and rings working the mixture well around the rings and into the grooves. Starting with No. 1 cylinder, proceed to install as follows:

6-122. Rotate crankshaft so that No. 1 piston, when installed, will be approximately at top dead center on the firing stroke; this is determined by both tappets of No. 1 cylinder being on the base circle of the cam lobes. Before any attempt is made to rotate the crankshaft support the connecting rods as shown in figure 6-2.

6-123. Assemble piston on connecting rod with piston number, which is stamped on bottom of piston head, toward the front of the engine. The piston pin should be palm or hand push fit. If the original piston pin is tighter than a palm push fit, it is porbably caused by

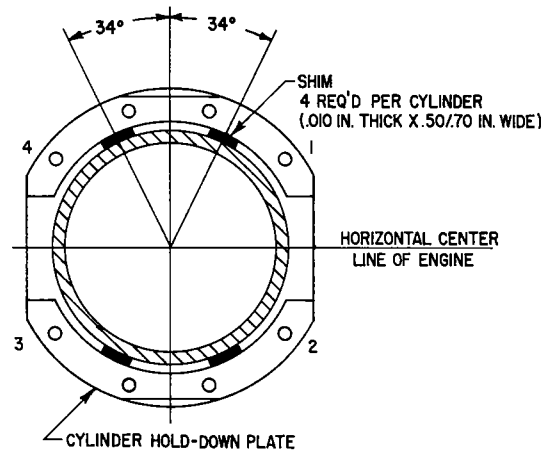

INSTRUCTIONS - ON ENGINES USING CYLINDER HOLD-DOWN PLATES, DURING INITIAL TIGHTENING, USE TWO SHIMS BETWEEN EACH PLATE AND THE BARREL, LOCATED AS SHOWN. REMOVE SHIMS BEFORE FINAL TIGHTENING.

Figure 6-31. Location of Shims Between Cylinder Barrel and Hold-Down Plates

nicks or slight carbon in the piston pin bore of the piston. If a new piston pin or piston is to be installed, select the pin to give a palm push fit at room temperature of 15° to 20°C. (60° to 70°F.). After piston pin is in place and centrally located, insert a piston pin plug at each end of the piston pin.

6-124. Place a rubber cylinder base oil seal ring (27, figure 6-5) around the cylinder base, assemble the applicable piston ring compressor over the top piston rings and install the cylinder over the piston, pushing the piston ring compressor ahead with the cylinder barrel. This will encircle and compress the oil scrapper ring of O-235-C pistons at the piston skirt. As the cylinder barrel approaches the crankcase, catch the piston ring compressor as it drops off the piston skirt. When the base of cylinder is seated on crankcase pad, secure the cylinder with 3/8 inch and 1/2 inch cylinder base nuts, tightening the nuts finger tight only.

NOTE

Cylinder hold-down plates (10, figure 6-5) are not employed on all engines. Consult the applicable Parts Catalog for model application. When applicable, install the hold-down plates before assembling hold-down nuts. Also note that on o-235, O-290-D and -D2 series shroud tubes must be inserted prior to assembling cylinder to crankcase.

6-125. To assure proper assembly of the crankcase halves and to eliminate the possibility of subsequent loosening of cylinder base nuts, a definite and specific sequence of tightening all crankcase and cylinder base nuts must be followed. Be certain that crankcase halves have been brought together, and fastenings secured as directed in Section 7, before installing cylinders. The cylinder base hold-down nuts are installed as described in the following paragraphs.

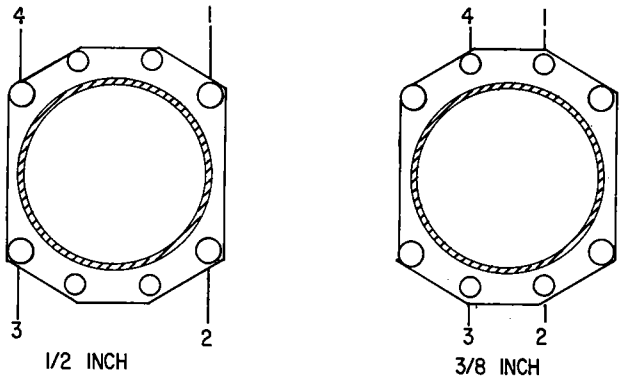

Figure 6-32. Sequence of Tightening Cylinder Base Nuts

6-126. When all cylinders have been initially installed on the crankcase as described in paragraph 6-124, begin tightening all cylinder base nuts as described below, using the proper cylinder base nut wrenches and handle in conjunction with a suitable torque indicator. Torque wrenches should employ the flexible beam design hydraulic principle or a dial indicator with rack and pinion.

NOTE

Before installing cylinder hold-down nuts, lubricate crankcase through stud threads with any one of the following lubricants, or combination of lubricants.

1. 90% SAE 50W engine oil and 10% STP.
2. Parker Thread Lube
3. 60% SAE 30 engine oil and 40% Parker Thread Lube.

a. Assemble hold down plates (where applicable) and cylinder base hold down nuts. Install shims between hold down plates and cylinder barrel as directed in figure 6-31.

b. Tighten 1/2 inch or 7/16 inch hold down nuts to 300 inch pounds (25 foot pounds) torque.

c. Remove shims and using the same sequence, tighten the 1/2 inch nuts to 600 inch pounds (50 foot pounds) torque or the 7/16 inch hold down nuts to 420 inch pounds (35 foot pounds) torque.

d. Tighten the 3/8 inch hold down nuts to 300 inch pounds (25 foot pounds) torque. Sequence is optional.

NOTE

All O-235 series engines, except the 125 HP series, employ only 3/8 inch hold down nuts. Tighten these nuts to 300 inch pounds (25 foot pounds) torque in the sequence shown for 1/2 inch hold down nuts in figure 6-32.

e. As a final check, hold the torque wrench on each nut for about five seconds. If the nut does not turn, it may be presumed to be tightened to correct torque.

f. Recheck clearance between hold-down plates and cylinder barrel. If .010 clearance is not obtained, loosen nuts and repeat steps b and c.

6-127. After all cylinder base nuts have been tightened, remove any nicks in the cylinder fins by filing or burring.

6-128. Install some type of vented plug in each spark plug hole after assembly of cylinder to prevent entrance of foreign matter and at the same time to permit the engine to be turned easily by hand.

6-129. (Except O-235, O-290-D). Install hydraulic tappet plunger and cylinder assemblies with spring end outward and sockets with concave end outward in the hydraulic tappet bodies.

CAUTION

Be sure that there is no oil inside tappet body and that the tappet plunger and cylinder assembly are thoroughly clean and dry. Wash any lubricating or preservative oil out of these parts, since tappet assemblies must be absolutely dry in order to check tappet clearance.

6-130. Assemble new shroud tube oil seals in both shroud tube oil seal retainers in crankcase and on outer end of the two push rod shroud tubes; then assemble a shroud tube seal sleeve over each of these seals, centering the sleeve on the seal.

6-131. Parallel Valve Cylinders. (Except O-235-C, O-290-D, -D2.) See figure 6-1. Install each shroud tube (1) through its hole in the rocker box and seat the end firmly in the crankcase. Place a spacer, two springs (2), a lockplate (3), and a plain 1/4-20 nut (4) over the stud provided in the rocker box. Tighten the nut to proper torque and secure by bending the lockplate over the nut and springs.

6-132. Angle Valve Cylinders. See figure 6-5. Assemble shroud tube spring (17) over the inner ends of the two shroud tubes (18) so that the detent notches in the spring are approximately 90° removed from detents on tubes. Place shroud tube washers (15), as many as necessary to bring minimum overlap between the spring and detent lugs to 1/8 inch, over end of each tube and insert tube ends through oil seals in crankcase. Hold both push rod shroud tubes with detent at inner end at unlocked position and insert the outer end of tubes in cylinder head rocker box. See that all rubber seals (14) are inserted squarely and then turn each shroud tube 90° thus locking the tubes by engaging the detents with the notches in the spring.

6-133. Select two push rods (13), dip in oil mixture described in paragraph 3-39 and insert full length through shroud tubes. Press tightly against outer ends and check for spring tension and free travel of unloaded or dry hydraulic tappet plungers.

6-134. Parallel Valve Cylinders. Pull rocker shaft out far enough to enable the rocker arm to be installed and push rocker shaft thru center hole, insert other rocker arm and secure with rocker shaft. Before installing exhaust rocker place special cap (39, figure 6-4) over the sodium cooled exhaust valve stem. Position rocker shaft until it protrudes equally from both outside bosses.

6-135. Angle Valve Cylinder. Slide rocker shaft back and install rocker (22, figure 6-6) and thrust washer (23, figure 6-6). Before installing exhaust valve rocker place special cap (32, figure 6-6) over the exhaust valve stem. Slide rocker shaft back into position. Repeat with the other rocker arm and thrust washer. If clearance between the valve rocker and cylinder head cannot be brought within limits (See Table of Limits) by the use of standard valve rocker thrust washers, clean up the worn valve rocker support boss as described in paragraph 6-87 and use any two of the selective fit undersize washers to bring clearance within limits.

CAUTION

Exhaust and intake rocker assemblies are different due to angle of valves. Be sure rockers are correctly assembled.

6-136. (All engines except O-235, O-290-D.) Check dry or unloaded valve tappet clearance by pushing in on push rod end of valve rocker and checking clearance between end of valve rocker and valve stem tip, using valve clearance gage. Valve rocker clearance on all subject engines is .028 - .080. If clearance is out of limits adjust by using a shorter or longer push rod. Inserting a longer rod will decrease the clearance. Consult Service Instruction No. 1060 for identification of push rods. At conclusion of valve rocker clearance check, assemble rocker shaft covers (31 figure 6-5 or 6-6) on angle valve cylinders temporarily to prevent displacement of valve rockers.

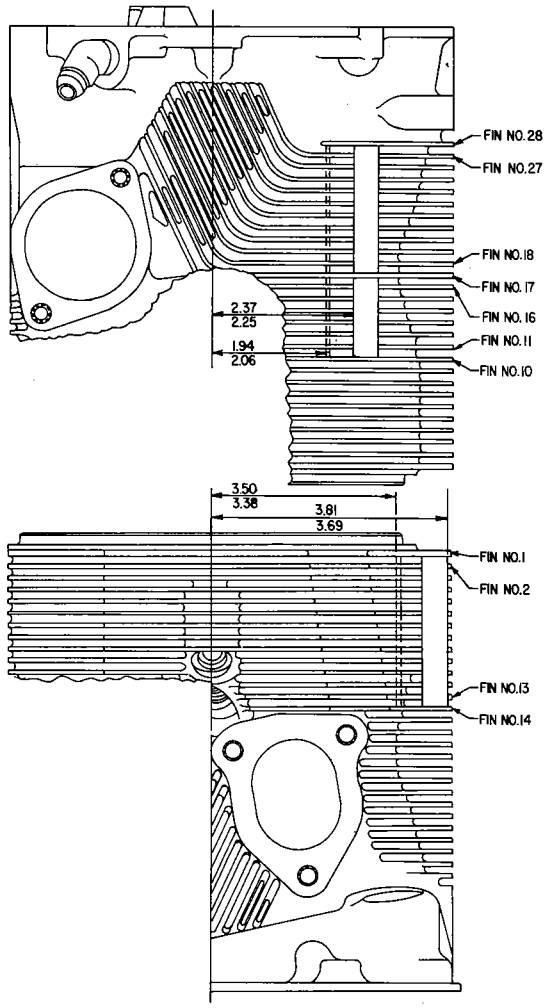

Figure 6-33. Cylinder Head Fin Stabilizers Angle Head - Up Exhaust

6-137. (O-235-C, O-290-D.) Set tappet clearance on these models in the following manner:

a. Set tappets on numbers 2 and 4 cylinders at zero clearance. This will load the camshaft on one side.

b. Rotate the crankshaft until No. 1 piston is at TDC of the compression stroke. Both valves will now be closed. Adjust each for a 0.007/0.009 clearance.

c. Following the procedure set forth in step "B" for numbers 3, 2 and 4 in that order.

d. Tappet clearance must be checked after engine run-in. At that time clearance desired is 0.010 inch. However, 0.006/0.012 is acceptable.

6-138. At completion of valve clearance check on each cylinder, recheck clearance on all cylinders and make necessary corrections. Coat all mechanism parts within rocker boxes as described in paragraph 3-37 and 3-39. Assemble rocker box cover gaskets and covers on each rocker box and tighten to specified torque. On the angle valve cylinder tighten rocker shaft covers to specified torque.

NOTE

On earlier models of the IO-540 series some leaking at the rocker shaft cover stud was experienced. This can be corrected by the application to the studs of Gasoila, a sealant manufactured by the Federal Process Co. Be certain to wipe off excessive sealant from the rocker shaft cover mounting surface.

6-139. Installation of Cylinder Head Fin Stabilizers. (Angle Valve Cylinders). Clean the stabilizers and affected fin areas thoroughly to remove all traces of grease, dirt or other foreign matter.

6-140. Apply Dow Corning Silastic 140 adhesive to the fin stabilizers and press surfaces together in the locations described in figures 6-33 and 6-34.

NOTE

Because of engineering changes two widths of fin stabilisers (one approximately .63 inch and one approximately .31 inch) may be encountered. See figures 6-33 and 6-34. Dotted lines call out measurements for narrow stabilizers, solid lines for wide stabilizers.

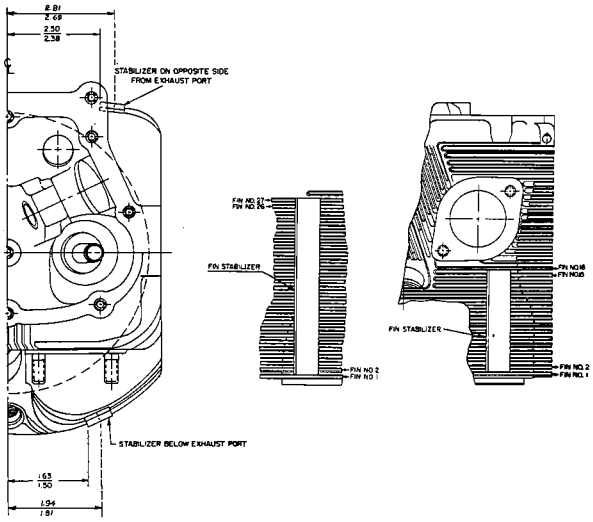

Figure 6-34. Cylinder Head Fin Stabilizers
Angle Head - Down Exhaust

6-141. Cylinder Painting. (All Models employing Cylinder Hold Down Plates.) This paragraph is intended to alert personnel to the extreme caution necessary when painting the cylinder base flange. Any excessive amount of paint between the cylinder hold down plate and the cylinder flange will lead to a loss of torque on the cylinder base nuts and eventual stud and/or cylinder failure. The following procedure should be followed when painting a cylinder:

a. Remove all old paint from the cylinder. A vapor degreaser is best suited for this purpose.

b. Mask off the following parts of the cylinder: Masking tape, corks, plugs, metal covers, etc. are acceptable for masking purposes.

1. Rocker box section including the rocker box flange. Both valve ports and flanges. Thermocouple hole. Spark plug holes. Push rod shroud tube holes. Valve rocker shaft cover flange. All other exposed threaded surfaces in which paint might accumulate.

c. Spray a very light coat of zinc chromate primer (.0005 maximum thickness) on the cylinder flange. See figure 6-35. If the correct amount of paint has been applied the color of the paint will be green with a yellowish tint and the metal will show through. If the paint is too thick the color will be zinc chromate yellow.

CAUTION

It is imperative that the paint thickness on the flange be held to .0005 maximum. To measure the thickness of the paint layer, one of two methods may be used. A Tinsley thickness gage which incorporates a magnetic needle and is scaled in tenth of thousandths is the most satisfactory method. If this type equipment is not available, use a micrometer to measure the thickness of the flange before and after painting. If the paint is too thick it must be removed and repainted.

d. Mask off the flange area as shown in figure 6-35. Proceed to paint the cylinder with a Phthalate resin type enamel (AMS3125C or equivalent MIL-E-7729) properly thinned with Toluene or equivalent (AMS3180 or equivalent Federal Spec. TT-T-548).

e. Use a cloth dipped in thinner to clean paint from all surfaces where paint may have accidentally accumulated.

f. The best finish will result if the cylinder is air dried for fifteen minutes and then baked in an oven until completely dry.

6-142. Intercylinder Baffles. (Where applicable.) All intercylinder baffles must be attached with an "S" type retaining hook and a slotted retainer. Hook the baffle retaining hook through the hole in the baffle. Place the baffle in position beneath and between the cylinders, running the hook up between the cylinder barrels. Place a baffle retainer in place between the cylinders and using a baffle installation tool, bring the retainer hook through the slot in the retainer. During the operation the retainer is forced down until the hook comes above the surface of the retainer far enough to be turned and hooked over the bridge between the slots in the retainer.

NOTE

The baffles on up exhaust cylinder assemblies are placed above and between the cylinders. The retainer is placed below and fastened in the same manner as described above.

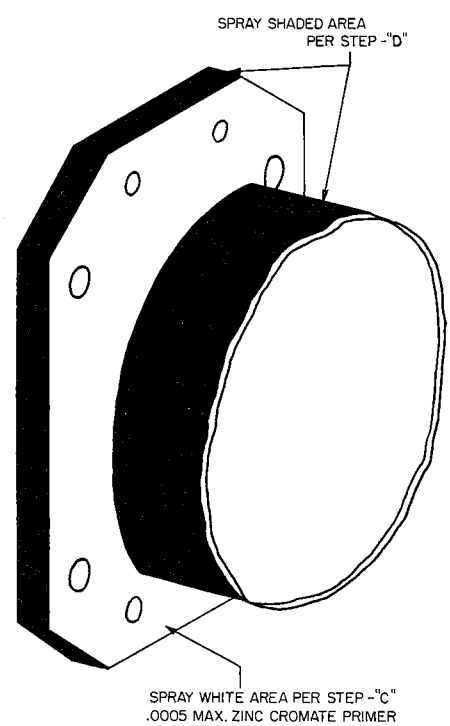

Figure 6-35. Cylinder Flange Area

SECTION VII

CRANKCASE, CRANKSHAFT AND RECIPROCATING PARTS

7-1. At this time it is assumed that all accessories, cylinders, accessory housing and sump have been removed from the engine.

DISASSEMBLY

7-2. Starter Ring Gear Support - Remove the starter ring gear support assembly (32, figure 7-5) from the crankshaft propeller flange by tapping lightly on the rear face of the assembly. The alternator or generator drive belt will be removed with this unit.

7-3. Propeller Governor Oil Line. (Engines equipped with propeller governor on accessory housing.) If this line was not disassembled when removing the accessory housing, remove from the front of the crankcase by unscrewing the threaded fitting.

7-4. See figure 7-5. Remove the crankshaft idler gears (22) from the idler gear shafts (29). On engines employing camshafts with separate gears, remove the breather slinger (19), camshaft gear (14), and tachometer shaft spacer (18) by removing the 4 hex head bolts (21) and lockplate (20) securing the assembly to the camshaft. Remove the tachometer drive shaft (16) by removing the pin (15). See figure 7-6. On engines using integral camshafts, remove the retaining ring (14) and tachometer shaft spacer (13). Remove pin (11) and tachometer shaft (12).

7-5. Remove the nuts and bolts, from the parting surface of the crankcase, which hold the crankcase halves together. Remove the crankcase from the overhaul stand and place on the work bench.

7-6. Remove oil filler tube. See figure 7-1. Remove oil pressure relief valve assembly (23 or 24). Remove oil seal retainer plates (19) (used on engines that do not have crankcase modified with machined groove to accept oil seal with retaining lip on OD).

7-7. Hydro Control Valve. (O-235, O-290 series. Where applicable.) See figure 7-15. Remove cotter pin, slotted shear nut and hex head screw and remove lever. Remove the two 1/4 inch bolts securing the cover to the crankcase and remove the cover and valve body.

7-8. Crankcases that are doweled at the thru-studs (#2 saddle on 4 cylinder engines, #2 and 3 saddles on 6 cylinder engines and #2 - 3 and 4 saddles on 8 cylinder engines) must be separated by the use of pressure plates (ST-122). Instructions for the use of the plates are given in figure 7-16. After the crankcase is separated past the dowels remove the plates and lay the crankcase on the right side. Crankcases that are not doweled may be separated by laying on the right side and gently tapping the thru-studs with a soft hammer. Wire the camshaft to the left crankcase half as shown in figure 7-2.

7-9. From this point disassembly is the same for all crankcases. Reach down through the cylinder pads and push the left half of each main bearing insert down on the crankshaft so they will not fall when the crankcase half is removed. Separate the crankcase by hand and remove the bearing inserts, tappets, camshaft and crankshaft assembly. Place each tappet body, as it is removed, in its proper location in the cleaning basket. This is important as tappet bodies must be replaced in the same location from which they were removed.

NOTE

> In the left crankcase half the intake tappet for its corresponding cylinder is located nearest the front of the crankcase, while in the right crankcase half the intake tappet is nearest the rear of the crankcase.

7-10. Propeller Governor Drive (Located on front left side of crankcase). See figures 7-3 and 7-4. Remove the hex head plug (6) and gasket (5) from the propeller governor housing. Remove the idler shaft (4) through the opening in the housing at the same time supporting the idler gear (9) to prevent dropping and damaging. Note that the idler shaft on four cylinder engines is pinned to the housing. Pull the governor driven gear (8) from the housing.

7-11. Crankcase - Remove all threaded plugs to facilitate cleaning. Remove and discard the rubber oil seals encircling the studs. (Doweled crankcases do not employ oil seals at the dowels). Where applicable remove the piston cooling oil jets (17, figure 7-1).

7-12. Remove the two crankshaft idler gear shafts from the rear of the crankcase halves. On the eight cylinder engines remove also the two magneto drive gear shafts.

7-13. Camshaft Governor Drive Gear (6 and 8 cylinder engines using camshaft with separate gears). See figure 7-5. Remove the governor drive gear (2) by removing the two external retaining rings (1) that secure it to the camshaft.

7-14. Crankshaft - With the crankshaft properly supported at front and rear main bearings, remove the nuts securing the rod caps to the connecting rod. Remove the rods by tapping on the rod bolts with a soft hammer. Discard the bearing inserts, bolts and nuts. Reassemble each cap with its corresponding rod. Rods and caps are not interchangeable.

7-15. To remove the crankshaft gear (26), flatten out the lockplate (24) and remove the hex head screw (23). Tap the crankshaft gear gently, with a fibre drift, to remove from the crankshaft. Do not remove the dowel from the rear end of the crankshaft unless it has been obviously damaged.

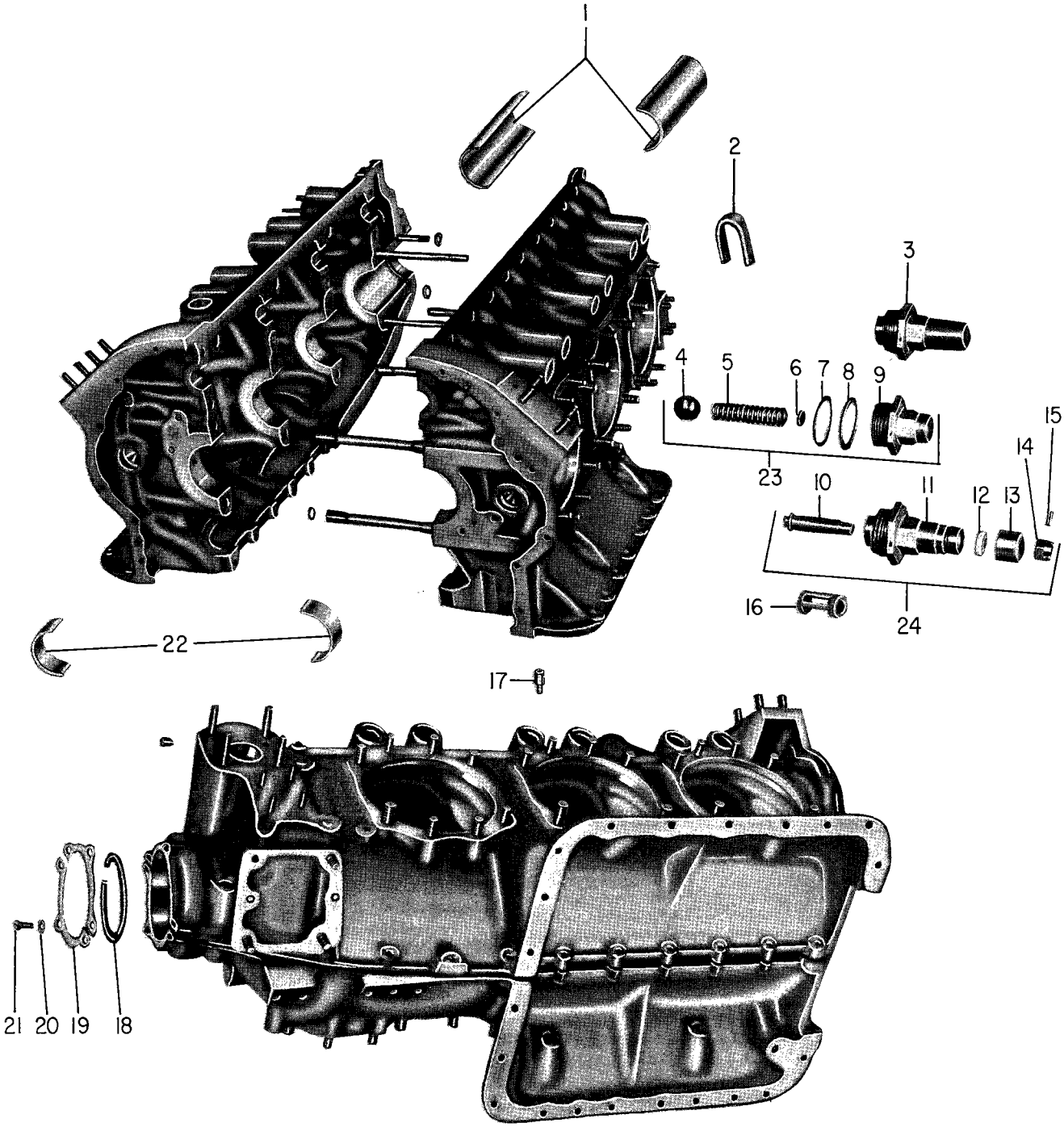

1. Front Main Bearing Insert
2. Lifting Strap
3. Oil Relief Valve Plug (Field Conversion)
4. Ball
5. Spring
6. Washer
7. Spacer
8. Gasket
9. Oil Relief Valve Plug
10. Oil Relief Valve Screw
11. Oil Relief Valve Plug
12. Oil Relief Valve Insert
13. Oil Relief Valve Cap
14. 3/8-24 NF-3 Nut
15. Spring Pin
16. Oil Relief Valve Sleeve
17. Piston Cooling Nozzle
18. Crankshaft Oil Seal
19. Retaining Plate
20. Washer
21. Screw
22. Main Bearing Insert
23. Oil Relief Valve Assy. (Non-adjustable)
24. Oil Relief Valve Assy. (Adjustable)

Figure 7-1. Typical Six Cylinder Crankcase

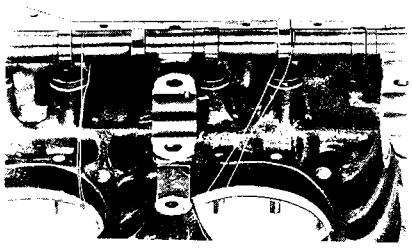

Figure 7-2. Camshaft Wired to Crankcase Half

7-16. Remove the crankshaft oil seal (18, figure 7-1) from the crankshaft. Do not remove the propeller flange bushings from the flange of the crankshaft unless they are damaged and/or loose.

7-17. Counterweights - See figure 7-5. Counterweights (8) are disassembled from the crankcase merely by removing the retaining rings (11), after which the washers (10), rollers (9) and counterweights (8) may be detached from the crankshaft lug.

NOTE

All counterweights and their related parts should be reassembled in the same location they occupied on the crankshaft before disassembly. For example, the retaining washers used with the counterweights are selectively fitted to the washer seats in the counterweights during manufacture. It is advisable, therefore, to mark all counterweight parts during disassembly to insure proper identification. These markings must be impermanent. No scoring, scratching, etching or other permanent marking of any kind is permissible on these parts.

7-18. Sludge Tubes (4 cylinder engines - where applicable). Remove the four crankshaft sludge tubes (30, figure 7-5) with the sludge tube removal drift (P/N 64548) by placing drift end of the tool in the tube and driving out the tube with the bar portion of the tool. Do not clean the tubes but lay them aside to ascertain the presence or absence of metal particles in the sludge deposits. Do not re-use sludge tubes.

7-19. Sludge Tubes (6 and 8 cylinder engines - where applicable). When removing either six or eight cylinder engine sludge tubes use slide hammer puller (P/N 64782) and an adapter. Adapter P/N 64547 for six cylinder engines and adapter P/N 64784 for eight cylinder engines. Remove the jaws from the slide hammer puller and assemble the puller adapter on the slide hammer puller. Remove collar from the adapter, insert the adapter through the sludge tube, and reassemble the collar. Pull the tube out of the crankshaft with a series of quick hard strokes of the slide hammer. Do not clean tubes but lay them aside for examination to ascertain the presence or absence of metal particles in the sludge deposits. Do not re-use sludge tubes.

CAUTION

All crankpin journal sludge tubes must be removed from the crankshaft; otherwise accumulated sludge loosened during cleaning will clog the crankshaft oil passages and cause subsequent bearing failures. The oil transfer tubes, however, which conduct oil from the main bearings to the crankpin journals must not be removed under any circumstances. Sludge tubes are not employed in later model crankshafts. However, this is not to imply that sludge tubes can be removed and not replaced in those crankshafts originally using sludge tubes.

CLEANING

7-20. All crankcase, crankshaft and reciprocating parts are cleaned in accordance with the general instructions outlined in Section 3. When cleaning the crankshaft, clean the inside of all crankpin and main bearing journals and all oil passages with suitable brushes, after which flush thoroughly with clean solvent and compressed air.

CAUTION

Do not attempt under any circumstances to clean the crankshaft without first removing the crankshaft sludge tubes (where applicable). The solvent will loosen but not remove accumulated sludge. This loose sludge is certain either to form a stoppage in the nearest oil passage, or to wash through and cause a bearing failure.

7-21. Piston Cooling Oil Jets. (Where applicable) Immerse the piston cooling nozzle in petroleum solvent. Hold the ball check valve off its seat in the nozzle by inserting a light copper wire or other relatively soft material through the threaded end of the nozzle and wash thoroughly so that any dirt particles that may be under the ball seat will be washed out.

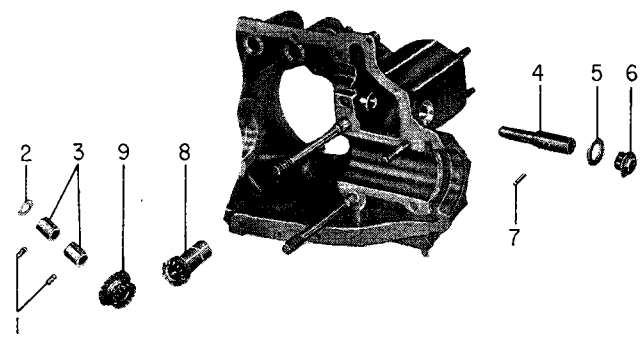

1. Dowel
2. Thrust Washer
3. Idler Gear Bushings
4. Idler Gear Shaft
5. Gasket
6. Hex Head Plug
7. Spring Pin
8. Prop. Governor Driven Gear
9. Prop. Governor Idler Gear

Figure 7-3. Propeller Governor Drive (4 cylinder engines with housing on crankcase)

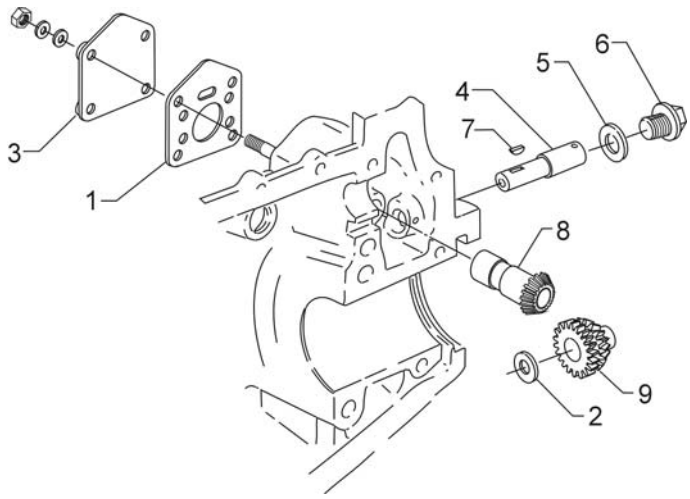

1. Gasket
2. Thrust Washer
3. Cover
4. Idler Gear Shaft
5. Gasket
6. Hex Head Plug
7. Woodruff Key
8. Prop. Governor Driven Gear
9. Prop. Governor Idler Gear

Figure 7-4. Propeller Governor Drive (6 and 8 Cylinder Engines)

INSPECTION

7-22. Inspect all crankcase, crankshaft and reciprocating parts in accordance with the general instructions contained in Section 3. Specific instructions follow.

7-23. Bearings (Precision Type). All precision type bearings used for main crankshaft bearings and connecting rod bearings will be replaced with new bearings at overhaul or upon removal from the engine.

7-24. Crankcase (Visual Inspection). Check carefully for burrs, nicks and cracks around the bearing support webs. Check bearing bores and inspect tang slots for any roughness that might cause improper seating of bearing inserts. Check all drilled holes.

7-25. Fretting on the contacting surfaces of the bearing saddle supports in the crankcase occurs on some engines. This condition is caused by slight motion between the contacting surfaces and results in abrasion of the metal surface. The affected areas have tiny pit holes and a frosted appearance, as contrasted to adjacent shiny unaffected surfaces. See figure 7-7. This condition can be misleading because of its trivial appearance; nevertheless it can be the cause of severe engine damage.

7-26. Fretting, by itself in this area, does not appreciably damage the structure of the metal, but the metal removed by the fretting action does change the size of the bearing saddles sufficiently to cause loose thru-studs and undersize main bearing bores. If not detected during overhaul, excessively tight crankshaft bearing fits will result in eventual engine failure.

7-27. Crankcase (Dimensional Inspection). The following paragraphs on crankshaft and camshaft dimensions will also describe dimensional requirements of the crankcase.

7-28. Crankshaft (Visual Inspection). Carefully inspect all surfaces of the shaft for cracks. If any cracks are found, replace the crankshaft. Check the bearing surfaces with particular care for scoring, galling, corrosion, pitting or other damage. If damage is found, the crankshaft must be repaired or replaced. See Section 3 and paragraphs 7-44 thru 7-66.

7-28A. Crankshaft (Magnetic Particle Inspection). Inspect the crankshaft using a magnetic particle inspection procedure performed by a certified operator.

a. Prior to magnetic particle inspection, completely remove all traces of oil, grease, and dirt. This can be accomplished best in a vapor degreaser using Trichlorethylene as a solvent or an equivalent environmentally friendly cleaning method. A 3 to 7 power magnifying glass must also be used to aid in the inspection.

b. Personnel performing the Magnetic Particle Inspection must be qualified and certified in accordance with the latest revision of ASNT Personnel Qualification SNT-TC-1A or NAS-410.

c. The inspection technique must be capable of detecting the smallest indication regardless of its orientation to the magnetic flux. This technique must be able to establish two magnetic fields, perpendicular to one another, in a plane parallel to the surface being inspected.

d. The Magnetic Particle Inspection must be performed in accordance with a written procedure that describes the technique, how to perform the inspection based on the technique, and the equipment being used.

e. A person who is qualified and certified to Level III, in accordance with ASNT Personnel Qualifications SNT-TC-1A or NAS-410, must approve the Written Procedure and Inspection Technique. ASTM E14444 Standard Practice to Magnetic Particle Examination must be used as a guideline for Magnetic Particle Inspection requirements.

f. If any cracks, including heat cracks, are found, replace the crankshaft.

7-28B. Crankshaft (Inspection of "PID" Stamped). The inspection of the "PID" crankshaft is made only after the removal of crankshaft from the engine and the Urethabond 104 has been machined off. The removal of the Urethabond 104 coating is as follows:

a. Verify that the STD-1211 front expansion plug and rear plugs have been removed prior to machining.

b. Locate crankshaft in lathe, gear end in chuck jaws (lined with brass).

c. Clamp chuck jaws on #4 main journal diameter. See figure 7-4A.

d. Secure steady rest on #1 main journal diameter. See figure 7-4B.

e. Set lathe at approximately 170 RPM and the feed rate at approximately 30 I.P.M. for proper stock removal.

f. Bore I.D. to remove Urethabond 104. Do not exceed required dimensions. See figure 7-4C.

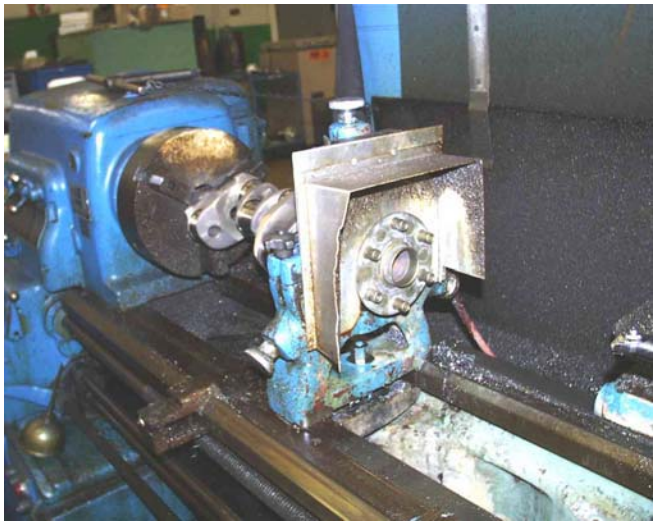

Figure 7-4A.

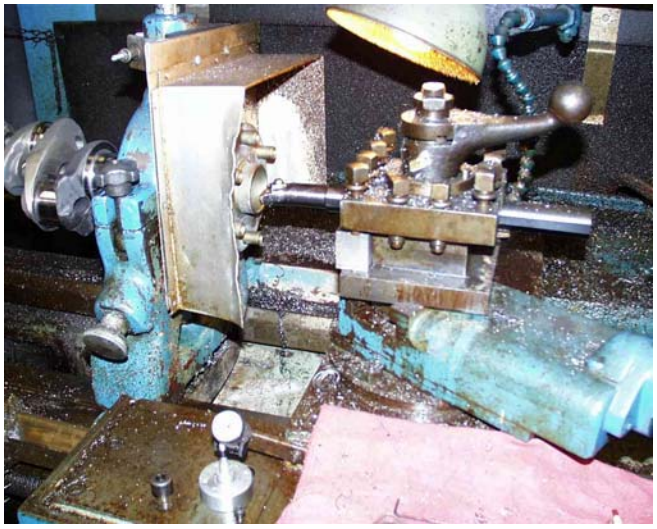

Figure 7-4B.

g. Gauge dimensions before removing crankshaft from lathe.

h. Remove crankshaft from lathe and clear I.D. of all machining chips.

i. At this point refer to the latest revision of Service Bulletin No. 505 for instructions to complete the crankshaft inspection.

j. Upon completion of inspection and all compliance is met refer to the latest revision of Service Bulletin No. 530 for recoating the surface I.D. of the crankshaft.

7-29. Crankshaft (Dimensional Inspection). Place the crankshaft in Vee blocks supported at the locations called out in Table of Limits (Reference 505) and using a surface plate and dial indicator measure the run-out at center main bearings. If this total indicator reading exceeds the dimensions given in Table of Limits (Reference 505) the shaft must not be reused. The crankshaft flange run-out may be checked at this time and if the total indicator reading exceeds the run-out given in Table of Limits (Reference 508) the shaft must be rejected.

CAUTION

Any attempt to straighten a bent crankshaft will result in rupture of the nitrided surface of the bearing journals, a condition that will cause eventual failure of the crankshaft.

7-30. Using new bearings at all main bearing locations, assemble crankcase halves together, temporarily torque all thru-bolts to 300 inch pounds and measure the I.D. of he bearings. Measure the O.D. of the crankshaft main bearing journals and compare the resulting clearances with the Table of Limits (Reference 500). Assemble the connecting rods

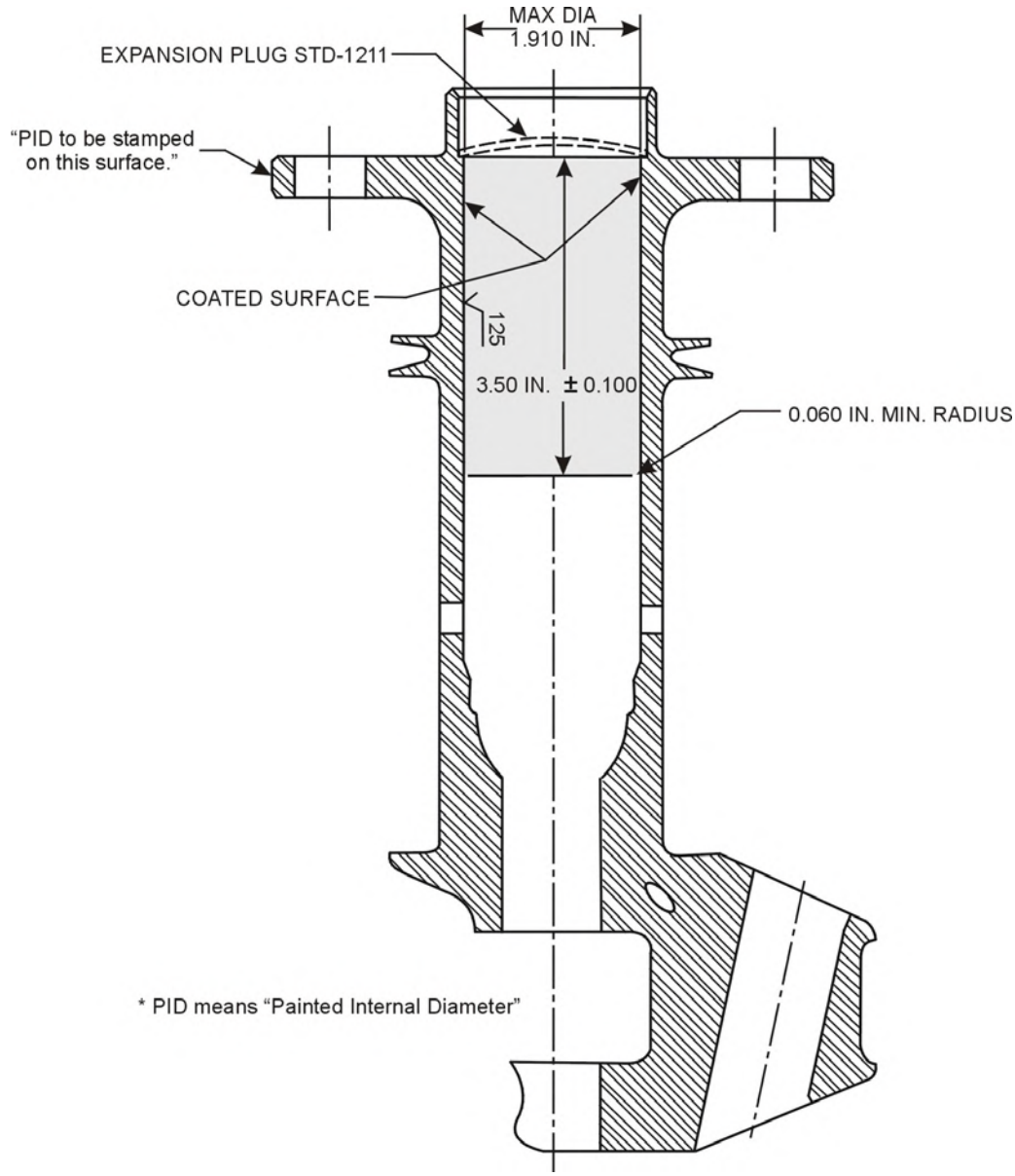

Figure 7-4C.

temporarily (using new bearings) and check the crankpin journal clearances in the same manner, see Table of Limits, Reference 501. If clearances do not fall within prescribed limits, the shaft must be brought undersize. See Repair and Replacement section for instructions for regrinding.

7-31. Camshaft (Visual Inspection). Carefully inspect all surfaces of the camshaft for cracks, scoring, galling, corrosion, pitting or other damage; be particularly careful when inspecting bearing surfaces. If a hydraulic tappet body has been rejected for spalling, inspect the corresponding cam lobe. Any indications of distress, surface irregularity or feathering at the edge of the cam lobe is cause for rejection of the camshaft.

7-32. Camshaft (Dimensional Inspection). Support the camshaft in Vee blocks at its front and rear bearing journals and check the run-out at the center bearing location. See Reference 516, Table of Limits. Slight bending operations are permissible on the camshaft providing careful magnetic inspection follows such procedures. Measure the diameter of the camshaft bearing journals and check them against the bearings formed by the crankcase. Reference 514, Table of Limits.

7-33. Crankcase – Main Bearing Clearance. The following inspection of the engine listed below must be accomplished unless thru-studs are marked as shown in figure 7-11.

O-320-B Series	Engines prior to 3815-39
O-340 Series	Engines prior to 405-30
O-360-A, -C Series	Engines prior to 3042-36
O-540 Series	Engines prior to 2790-40

7-34. Place the bearing plug (P/N 64906) so that the drilled clearance holes fit over the main bearing dowels of the center main bearing support to be checked and reassemble crankcase halves.

7-35. Using cylinder base hold down plates and nuts, torque all thru-studs in the sequence shown in figures 7-21, 7-22 or 7-23.

7-36. Attempt to insert a 0.004 inch tapered feeler gauge between the crankcase mating faces, see figure 7-10. If the gauge will not enter between the crankcase parting faces, the crankcase is considered satisfactory to be modified as directed in the Repair and Replacement section.

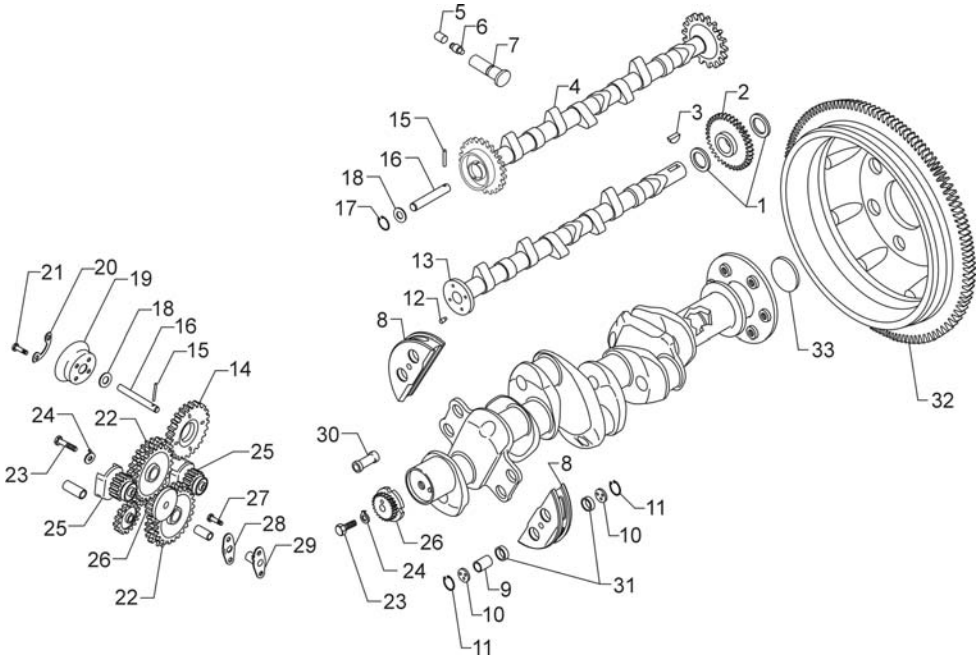

1. Retaining Rings
2. Camshaft Gov. Drive Gear
3. Woodruff Key
4. Camshaft (Integral Gear)
5. Tappet Socket
6. Tappet Plunger Assy.
7. Tappet Body
8. Counterweight
9. Roller
10. Washer
11. Retaining Ring
12. Stepped Dowel
13. Camshaft
14. Camshaft Gear
15. Pin
16. Tachometer Shaft
17. Retaining Ring
18. Spacer
19. Breather Slinger
20. Lockplate
21. Hex Head Screw
22. Crankshaft Idler Gears
23. Screw
24. Lockplate
25. Magneto Drive Gear
26. Crankshaft Gear
27. Hex Head Screw
28. Lockplate
29. Idler Gear Shaft
30. Sludge Tube (not used on current models)
31. Crankshaft Counterweight Bushing
32. Ring Gear Support Assy.
33. Expansion Plug

Figure 7-5. Typical Crankshaft and Related Parts

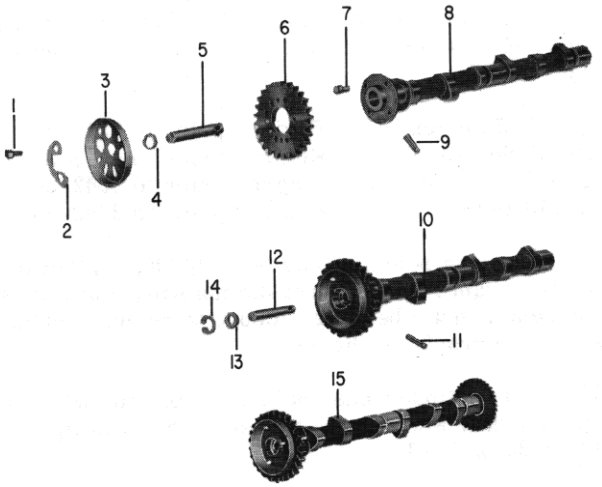

1. Hex Head Bolt
2. Lockplate
3. Breather Slinger
4. Spacer
5. Tachometer Shaft
6. Camshaft Gear
7. Dowel
8. Camshaft
9. Pin
10. Camshaft Integral Gear
11. Pin
12. Tachometer Shaft
13. Spacer
14. Retaining Ring
15. Camshaft (Prop. Governor Drive on Crankcase)

Figure 7-6. Camshafts - Integral and Separate Gears (4 Cylinder Engines)

7-37. When inspecting O-540 models, the above inspection procedure must be performed on both intermediate bearing saddles.

7-38. Connecting Rods (Dimensional Inspection). Discard all connecting rod bolts and nuts; new bolts and nuts are to be used on assembly. Check condition of bore in large end for seating of the bearing inserts. Check bore in small end of bushing with connecting rod bushing plug gage (P/N 64537). If the gage enters the bushing, bushing must be replaced.

7-39. Connecting Rod Parallelism Check. See figure 7-8. Using connecting rod parallelism and squareness gage (P/N 64530), insert tapered sleeves (1 and 2) in bearing holes in connecting rod. Be sure that bearing cap is assembled properly and securely tightened. Place arbors (3 and 4) through sleeves (1 and 2 respectively) and place gage arm (5) on arbor (3). Set adjusting screw (6) on gage arm to exact distance between arbors and lock the adjusting screw with nut (7). Then remove gage arm, place it on other end of arbor (3), and check distance between arbors. For exact parallelism or alignment, the distances checked on both sides will be the same. See reference 566, Table of Limits.

7-40. Connecting Rod Squareness Check. See figure 7-9. Using the same gage that was used in the parallelism check described above, place parallel blocks (1) on surface plate and, with sleeves and arbors still in place in connecting rod, place ends of arbor on parallel blocks. Check clearance at points (2) where arbors rest on parallel blocks, using a feeler gage. For exact squareness or zero twist, no clearance will exist at the designated points. See reference 567, Table of Limits.

7-41. Crankshaft Counterweight Bushings. Wear or damage to the crankshaft counterweight bushings, 31, figure 7-5, located in the crankshaft counterweight lugs, is almost impossible to detect by normal inspection procedures. Because of this situation and as damage to the crankshaft counterweight bushings could cause failure of the counterweight and/or the crankshaft, it is mandatory that these bushings be replaced at overhaul. The procedure for removal and replacement of the crankshaft counterweight bushings is contained in the Repair and Replacement section.

7-42. Counterweight Bushings. Wear in the counterweight bushings is usually evident as out-of-round on the inside diameter. Check each bushing with the bore gage, ST-73. The diameter should be between 0.7485 and 0.7505 inch. Out-of-round should not exceed 0.0005 inch. The ST-73 gage is specially made so that it can be set with a micrometer. If the diameter of any bushing is oversize, or excessively out-of-round, all the bushings in the counterweight must be replaced.

7-43. Piston Cooling Oil Jets (Where applicable). Present Avco Lycoming engines are incorporating a piston cooling nozzle designed to open at 37 to 50 psi. Test the nozzle assemblies for correct pressure in the following manner:

a. Use SAE #10 motor oil at a temperature of 65° to 90°F.

b. Direct a flow of oil through the nozzle. The oil stream must pass from the nozzle through a one inch diameter hole located on a center line through the nozzle and 4.5 inches from the face of the nozzle at 50 psi.

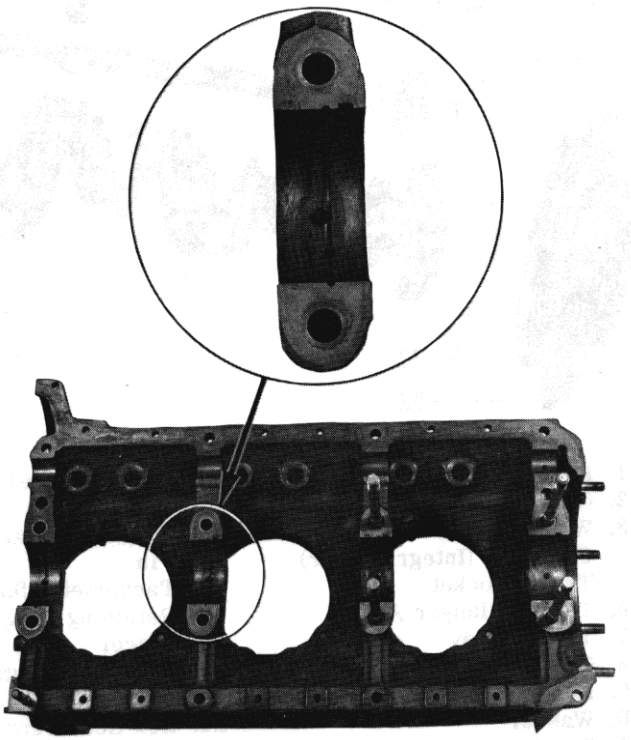

Figure 7-7. Crankcase Interior Showing Moderate Fretting at Stud Locations on Saddle Supports

REPAIR AND REPLACEMENT

7-44. Repair all crankcase, crankshaft and reciprocating parts in accordance with the general instructions contained in Section III. Specific instructions follow.

7-45. Crankshaft (Bearing Surfaces). During overhaul of the crankshaft, the operator must determine if it has standard or undersize bearing journals, then proceed with its overhaul accordingly. Undersize crankshafts are identified by a code symbol stamped on the front of the flange as a suffix to the part number. In addition to the code symbols the letters RN are stamped as a suffix to the serial number indicating the shaft has been renitrided. The code symbols are, M03MP (main and crankpin journals 0.003 inch undersize) M03M (main bearing journals 0.003 inch undersize) M03P (crankpin bearing journals 0.003 inch undersize). If the maximum service limits are exceeded (Reference 501 or 502, Table of Limits) standard shafts may be polished to 0.003 inch undersize and fitted with 0.003 inch undersize bearing inserts. Renitrided 0.003 inch undersize shafts may be polished to 0.006 inch undersize and fitted with 0.006 inch undersize bearing inserts. Do not allow lathe speed to exceed 150 RPM at any time during polishing operation.

NOTE

Note that if one surface is polished to .003 or .006 undersize all corresponding surfaces must be polished to same size. Polishing to undersize is preferred to grinding because shafts that are polished do not require renitriding whereas any grinding operation requires that the shaft be renitrided. This is necessary because of the nonuniformity of grinding tools. The possibility exists wherein the grinding wheel will cut through the nitrided surfaces on one or more of the journal radii causing areas of stress concentration that can develop into fatigue cracks and ultimately result in a broken crankshaft.

7-46. If it is necessary to make a standard shaft journal surface more than 0.003 inch undersize or a renitrided 0.003 inch undersize more than 0.006 inch undersize, the crankshaft must be ground to undersize and renitrided. Standard shafts may be ground to 0.006 inch or 0.010 inch undersize, renitrided 0.003 inch undersize shafts must be ground to 0.010 inch undersize. Shafts must be fitted with the corresponding undersize bearing inserts. Grinding the crankshaft is a delicate operation requiring adequate grinding facilities and a great degree of skill. A properly dressed wheel (Carborundum (GA54-J5-V10 or equivalent) must be used with generous amounts of coolant. The wheel must be fed to the journal or pin very slowly and the final ground finish maintained during the complete operation. This procedure must be followed to eliminate possibility of grinding cracks. After grinding, the crankshaft must be carefully inspected by the magnetic particle method. If any cracks or checks are found, the shaft must be rejected.

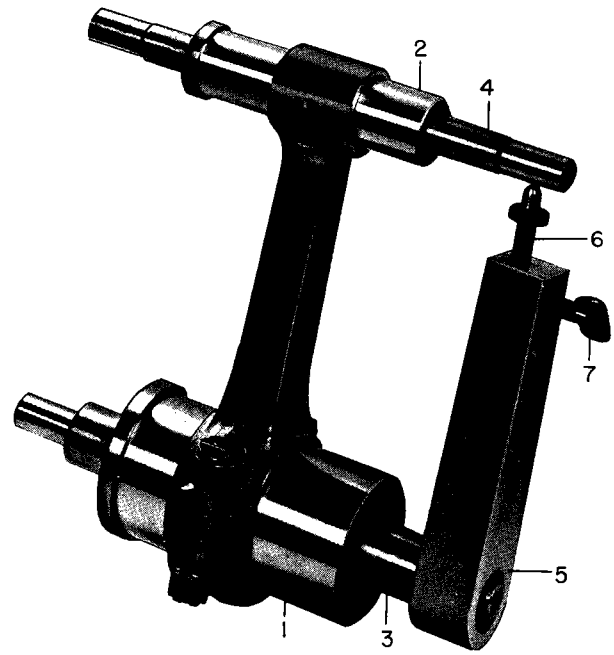

1. Tapered Sleeve (Crankpin End)
2. Tapered Sleeve (Piston Pin End)
3. Arbor (Crankpin Sleeve)
4. Arbor (Piston Pin Sleeve)
5. Gage Arm
6. Adjusting Screw
7. Wing Nut

Figure 7-8. Checking Parallelism of Connecting Rods

NOTE

If one crankpin bearing surface is ground undersize all crankpin bearing surfaces must be ground to same undersize. If one main bearing surface is ground undersize all main bearing surfaces must be ground to same undersize. Main bearing surfaces may be ground without affecting crankpin surfaces and similarly crankpin bearing surfaces may be ground without affecting the main bearing surfaces. After any grinding operation the crankshaft must be renitrided. It is recommended that the shaft be returned to Avco Lycoming for renitriding.

7-47. Crankshaft - Straightening Flange. Maximum permissible flange run-out is 0.018 inch TIR. If the flange run-out exceeds 0.018 inch the crankshaft must be rejected. If the flange run-out is less than 0.018 inch the flange may be straightened as described in the following paragraphs.

Before attempting any straightening operations, the flange bushings must be removed. When the surface distortion of the flange has been reduced as much as possible, the front face of the flange must be trued up by grinding. However, if the minimum width of the flange after grinding (Dimension "A", figure 7-12) is less than the dimensions called out in Table 7-1, the shaft must be rejected.

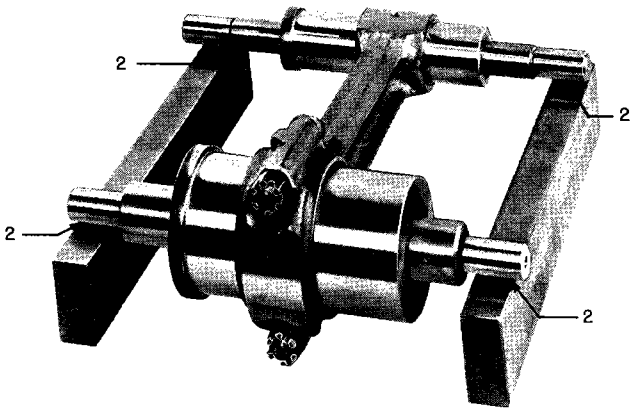

1. Parallel Blocks 2. Check Points

Figure 7-9. Checking Squareness of Connecting Rods

CAUTION

Extreme care must be exercised during any straightening operation to avoid damage to the nitrided surfaces of the crankshaft. The nitrided surfaces extend from the front face of the slinger to the crankshaft gear mounting surface. These nitrided surfaces are glass hard and will crack if shaft is bent, dropped or handled carelessly.

At the conclusion of any straightening operations, the entire crankshaft must be inspected by the magnetic particle method paying particular attention to the bearing surfaces and the fillet areas at the base of the flange.

7-48. After inspection, install the flange bushings and then cadmium plate the ground surfaces of the crankshaft flange. The plating, which should be 0.0005 inch maximum thickness, should be permitted to extend along the crankshaft proper only in the area shown in figure 7-12.

TABLE 7-1

Engine Model	Min. Width of Flange
O-235	0.190 inch
O-290-D	0.260 inch
O-290-D2	0.260 inch
O-320	0.260 inch
IO-320	0.260 inch
AIO-320	0.260 inch
O-360	0.370 inch
IO-360	0.370 inch
HO-360	0.370 inch
HIO-360	0.370 inch
AIO-360	0.370 inch
TIO-360	0.370 inch
O-540 (Except O-540-G)	0.370 inch
O-540-G	0.430 inch
IO-540 (Except IO-540-K, -M, -N and -R)	0.370 inch
IO-540-K, -M, -N, -R	0.430 inch
TIO-540-A	0.430 inch
TIO-540-C	0.370 inch
IO-720	0.370 inch

7-49. Reconditioning Worn Crankshaft Oil Seal Surface. If inspection personnel have found that the crankshaft oil seal surface on the shaft itself is damaged to the extent that the oil seal might leak, the following procedures are submitted to recondition this area of the crankshaft.

1. Remove propeller flange bushings from crankshaft flange and note the locations of long and short bushings replacement. Do not scribe on shaft. Use Avco Lycoming Special Tool ST-115 to remove flange bushings.

2. Strip cadmium plate from propeller flange and the area of the oil seal by immersing the shaft in a solution of ammonium nitrate (one pound of ammonium nitrate for each gallon of water).

3. Set up crankshaft in an external grinder and center carefully.

4. Use a No. 54 grit wheel and grind the area between the propeller flange and the oil seal face to remove nicks and scratches. Depth of grind must not exceed 0.005 inch. (0.010 inch u/s diameter).

NOTE

The grinding wheel, on the corner toward the propeller flange must be dressed to 0.50 inch radius while the opposite side, toward oil slinger, must be dressed 0.13 inch radius. Both radii must blend perfectly. Do not permit the side of the wheel to touch the propeller flange or face of oil slinger. See figure 7-13.

5. A No. 54 or 60 grinding wheel will produce a finish of approximately 8 to 10 microns. The surface roughness of the oil seal area should not exceed 10 microns before polishing with crocus cloth.

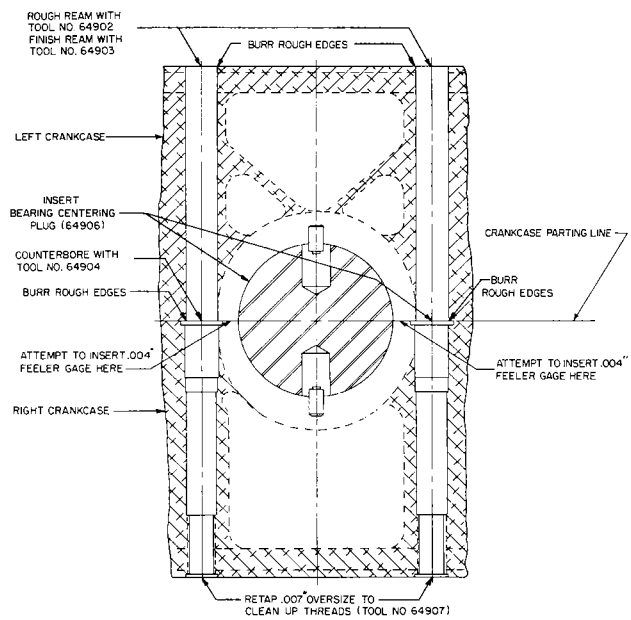

Figure 7-10. Cutaway of Crankcase Showing Steps to Install Body Fit Bolts

6. Polish the oil seal area of the shaft with crocus cloth while the shaft is rotated counter-clockwise when viewed from the flange (front) end of shaft. Do not move the cloth while polishing because the area must be free of spiral marks.

7. Clean the shaft to remove all traces of grinding dust and mask the bushing holes in the flange.

8. Cadmium plate (in accordance with AMS 2400) the flange and oil seal area of the crankshaft as indicated in figure 7-13. Do not plate beyond the 0.13 inch radius.

9. After plating, bake the crankshaft at 275°F. ± 10°F. for 5 hours to eliminate possibility of surface embrittlement.

10. See the applicable Avco Lycoming Parts Catalog for the particular engine model for correct propeller flange bushings and install new plated service bushings in the flange. Chill the bushings by refrigeration and install with Avco Lycoming Service Tool No. ST-115.

11. Support crankshaft in vee-blocks at the end journals and measure run-out at refinished area. Total indicated run-out must not exceed 0.002 inch.

12. Examine crankshaft by magnetic particle method.

7-50. Crankshaft, Counterweight Bushing Replacement (Where applicable). Wear or damage to the crankshaft counterweight bushings located in the crankshaft counterweight lugs, is almost impossible to detect by normal inspection procedures. Because of this situation and as damage to the crankshaft counterweight bushings could cause failure of the counterweight and/or the crankshaft, it is mandatory that these bushings be replaced at overhaul. The procedure for removal and replacement of the crankshaft counterweight bushings follows.

1. Thread the bolt of the counterweight bushing puller through the puller plate, positioning the plate so that the recess in it will be next to the crankshaft when the puller bolt is inserted through the bushing in the crankshaft. Install the small puller bushing over the end of the bolt and then place the puller nut over the end of the bolt and tighten. As the nut is tightened on the bolt the counterweight bushing will be pushed out of its recess in the crankshaft counterweight mounting ear and into the recess in the puller plate. See figure 7-14.

2. Measure the ID of the roller bushing hole in the crankshaft. If the hole measures 0.9369 - 0.9377 inch, no reaming of the hole is necessary and a standard bushing may be installed. If the roller bushing hole measures more than 0.9377 inch, the next oversize bushing must be installed and the hole reamed accordingly. See Table 7-2.

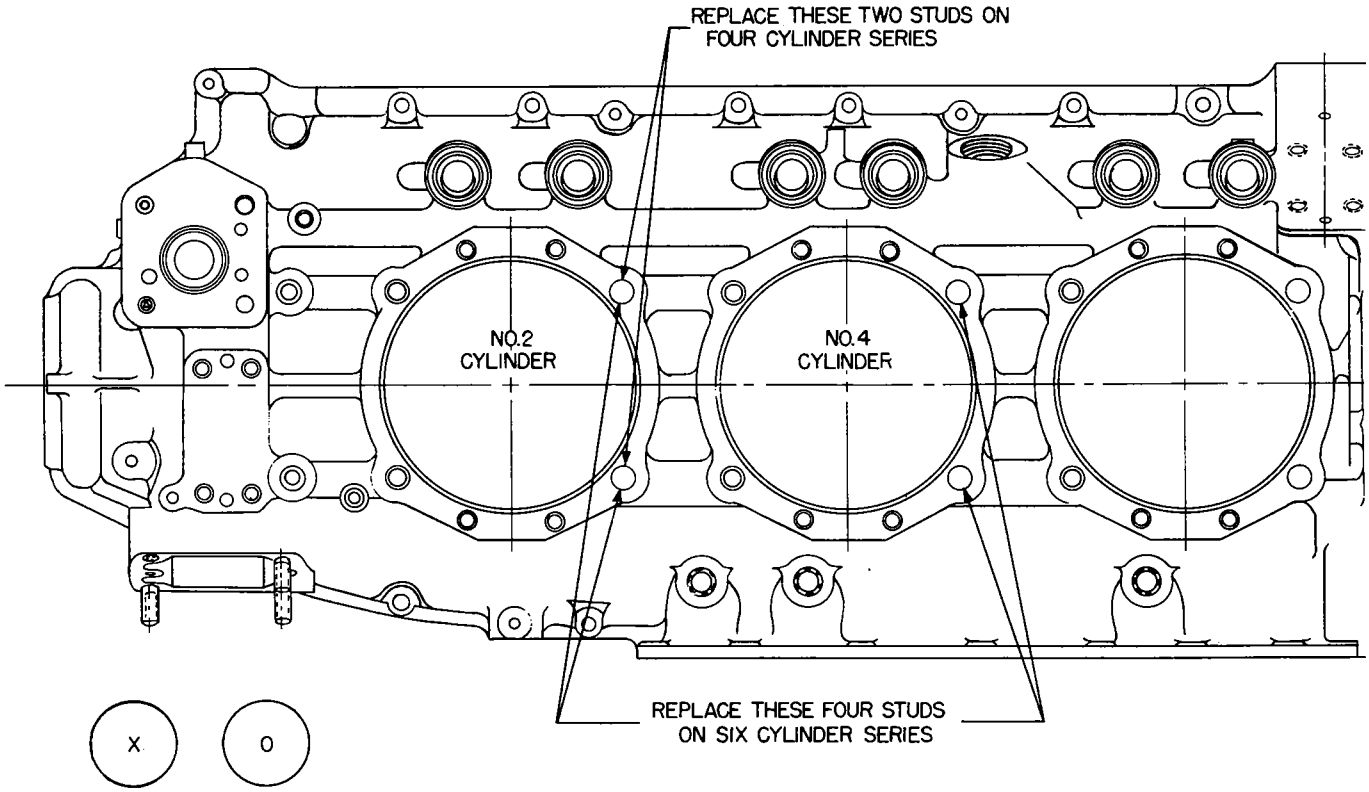

NOTE: ENGINES WHICH INCORPORATE BODY FIT THRU-STUDS AS INDICATED BY ARROWS WILL BE STAMPED "X" OR "O" AS SHOWN ABOVE. ENGINES WITH STUDS SO IDENTIFIED NEED NOT BE REWORKED

Figure 7-11. Location of Thru-Studs to be Modified

TABLE 7-2	
Hole Size	Reamer No.
.9369/.9377	None
.9420/.9425	64874
.9445/.9450	ST-210
.9470/.9475	64875
.9495/.9500	ST-211
.9520/.9525	64876

3. Determine the oversize reamer needed and assemble the reaming fixture over the crankshaft lug. Select the two openings in the fixture to line up with bushing holes and install the plugs provided to line up the holes in the fixture with the holes in the crankshaft lugs. Secure the fixture by tightening the set screw. Assemble the reamer to a suitable brace and proceed to hand ream the hole in the crankshaft lug to proper size.

4. Assemble the puller to the crankshaft in the same manner as described in "Step 1" except that the large puller bushing is used instead of small puller bushing. Place the correct size crankshaft bushing on the puller bolt, between the crankshaft lug and the large puller bushing. When the puller nut is tightened, the bushing will be forced into place in the crankshaft.

CAUTION

The inside diameter of these bushings is finished at the factory and no further machining of the bushing is necessary. Caution must be exercised when installing the bushings so that this finished ID is not damaged. Because of possible damage to the crankshaft, never, under any circumstances, remove or install the roller bushings by use of a drift.

5. After the bushing is installed, check its alignment with the main bearings by placing the crankshaft in vee blocks on a surface plate. Install the wedge blocks, Tool No. ST-212, in the bushing and compare parallelism of the wedge blocks with that of the main journals. Bushing must be parallel with .002 per inch. Support the crankshaft in the vee blocks at journals adjacent to the bushing location.

7-51. Counterweight Bushing Replacement - Consult the latest edition of Servie Instruction No. 1143 for information relative to rebushing counterweights and subsequent inspection.

7-52. Connecting Rod Bushings. If the bushing in the small end of the connecting rod is worn beyond service limits, it can be removed and replaced by accomplishing the following procedure:

1. Clamp the connecting rod on the connecting rod bushing replacement block (P/N 64597) in such a manner that the small bushing in the rod is in alignment with the hole stamped "Remove Bushing". Use the connecting rod bushing removal drift (P/N 64535) and drive the bushing out of the rod. Move the connecting rod to the "Install and Burnish" position and clamp it securely in place. Using the replacement drift (P/N 64536) drive a new bushing in place in the rod. Be sure the split in the bushing is located so that it is toward the piston end of rod and 45° off the centerline.

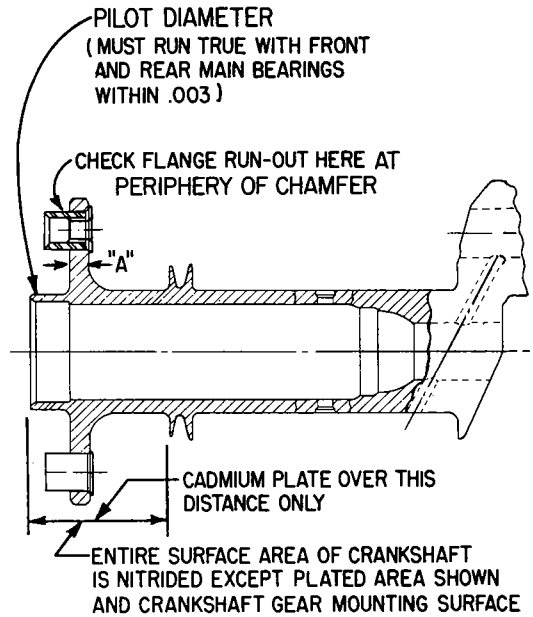

Figure 7-12. Limits for Straightening Bent Flange

2. Use a suitable arbor press and the connecting rod bushing burnisher (P/N 64580) to burnish bushing in place. Pass the burnisher completely through the bushing. Remove the rod from the holding block and finish bore the bushing to diameter shown in Table of Limits, SSP1776, Ref. 600. Check the bushing ID with finish ID gage (P/N 64767). Check alignment of the hole in the bushing with connecting rod parallelism and squareness gage (P/N 64530) as described in paragraphs 7-39 and 7-40. If the assembly does not meet the requirements shown in references 503 and 504, Table of Limits, SSP1776, the entire assembly must be replaced.

7-53. Crankshaft and Gear Assembly. Damage to the crankshaft gear and the counterbored recess in the rear of the crankshaft, as well as badly worn or broken gear alignment dowels are the result of improper assembly techniques or the reuse of worn or damaged parts during reassembly. Since a failure of the gear or the gear attaching parts would result in complete engine stoppage, the proper inspection and reassembly of these parts is very important. The procedures described in the following steps are mandatory.

CAUTION

Prior to making any repairs to the crankshaft, insure that the counterbored gear mounting face of the crankshaft is undamaged by fretting or galling. Damage of this nature is unrepairable.

1. Examine the threads in the gear retaining bolt hole of the crankshaft. Insure that the tapped hole is clean and

the threads are undamaged. The threads can be cleaned by running a tap through them. Use a standard .3125-24NF3 (P.D. .2854/.2878) tap for 5/16 inch threads. Use a standard .500-20NF3 (P.D. .4675/.4701) tap for 1/2 inch threads. Check the depth of the thread by threading a gear retaining bolt to the bottom of the hole and comparing the exposed length of the bolt with the thickness of the gear and lockplate.

CAUTION

Use extreme care when cleaning threads with tap.

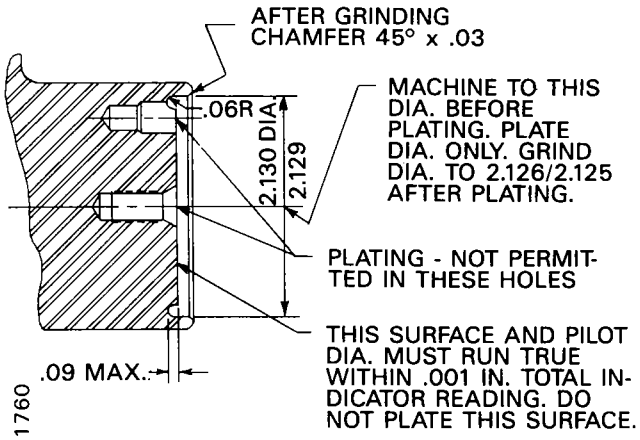

Figure 7-12A. Details for Repairing Pilot Diameter of Crankshaft

2. Check the condition of the dowel in the end of the crankshaft. It should be perfectly smooth with no indication of nicks or deformation. If it is out-of-round, it should be removed and replaced with a new one. Replacement instructions are in step 4. If dowel condition is acceptable, insure that it is installed as shown in Figure 7-12B. or Figure 7-12C.

CAUTION

If the dowel must be removed, it is very important to do so without damaging the hole in the crankshaft. A satisfactory method consists of drilling a 1/8 in. dia. hole through the center of the dowel; then fill the hole with oil and insert a piece of 1/8 in. dia. drill rod in the hole. Strike the end of the drill rod a sharp blow with a hammer. Hydraulic pressure of the oil will force the dowel from the crankshaft.

3. Check the pilot diameter of the counterbore on the end of the crankshaft for size and evidence of damage. The diameter should not exceed 2.1262 inches when measured at any location. If found to be oversize, the crankshaft may be repaired as described in the following steps. Do not attempt to reuse a crankshaft with an oversize pilot diameter.

a. After removing the dowel, machine the pilot diameter in the end of the crankshaft to 2.129/2.130 inch as shown in the illustration. See Figure 7-12A. Also, cut the .09 deep x .06R undercut as shown.

b. Chrome or nickel plate the surface of the pilot diameter with a firmly bonded deposit that is free of pin holes, blisters and any other imperfections that could impair the function of the parts.

c. After plating, stress relieve the shaft by baking at 390° to 410°F. for 3 to 5 hours.

d. Grind the plated pilot diameter surface to 2.125/2.126 inch. Note that the diameter must run true with rear main journal within .001 inch total indicator reading.

CAUTION

The crankshaft counterbored gear mounting face should be checked for damage. If the surface face requires repair other than specified in CAUTION following paragraph 7-53, the crankshaft should first be measured as shown in Figure 7-12G. If the crankshaft measures more than the minimum dimension shown in Figure 7-12G, the surface may be reworked down to the dimensions shown. (Do not plate the surface.) The surface must be true within .001 in. total indicator reading to rear main bearing and the surface finish must be held to 45 to 90 microinches.

e. Chamfer edge of pilot diameter 45° x .03 as shown in Figure 7-12A.

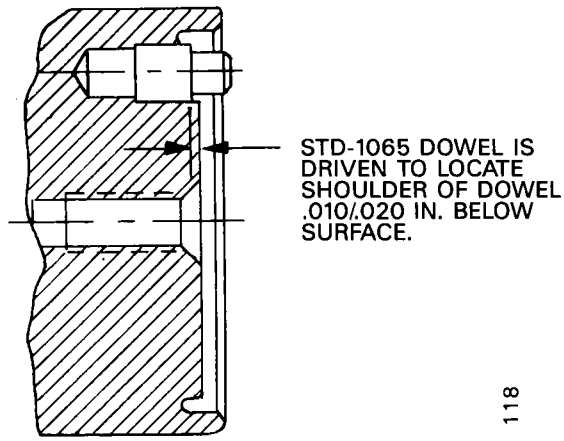

Figure 7-12B. Section Thru End of Crankshaft Showing Driven Height of STD-1065 Dowel

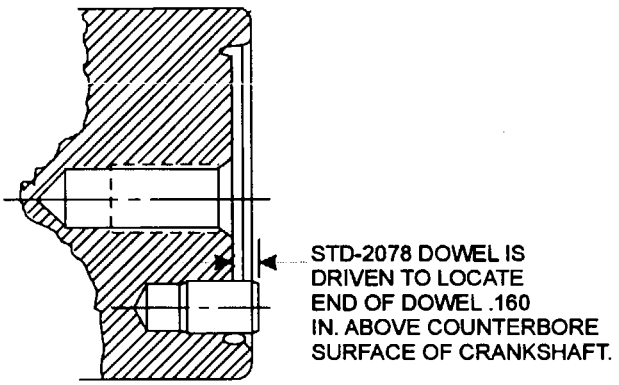

Figure 7-12C. Section Thru End of Crankshaft Showing Driven Height of STD-2078 Dowel

4. If the dowel has been removed, check the condition of the dowel hole in the crankshaft. If out-of-round or oversize, ream as required for installation of an oversize dowel. Available oversize dowels and the corresponding reamed holes are shown in Table 7-3.

TABLE 7-3. DOWELS & DOWEL HOLES

Dowel Part No.	Size Code on Dowel	Diameter of Dowel "A" (Fig. 7-12D)	Diameter of Dowel Hole in Crankshaft
STD-1065	None	.3095/.3100	.3085/.3095
STD-1065-P02	P02	.3115/.3120	.3105/.3115
STD-1065-P05	P05	.3145/.3150	.3135/.3145
STD-1065-P10	P10	.3195/.3200	.3185/.3195
STD-1065-P15	P15	.3245/.3250	.3235/.3245
STD-2078	None	.3760/.3765	.3750/.3760
STD-2078-P02	P02	.3780/.3785	.3770/.3780
STD-2078-P05	P05	.3810/.3815	.3800/.3810
STD-2078-P10	P10	.3860/.3865	.3850/.3860
STD-2078-P15	P15	.3910/.3915	.3900/.3910

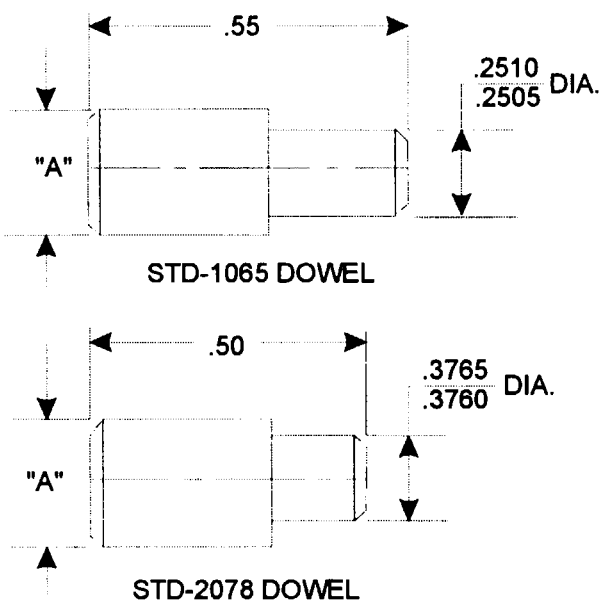

Figure 7-12D. Details of Crankshaft Dowels

CAUTION

Crankshaft gears for applicable engines are now manufactured with three ¾ inch radius scallops cut into the OD of the pilot flange and a counterbore on the back side of the gear. These enlarged scallops have been added to allow inspection of the gear and crankshaft assembly. Serviceable gears must be modified as shown in Figure 7-12E, prior to being reassembled on the crankshaft, or a new gear that has been manufactured to this configuration must be installed. Before modifying the gear, measure the diameter of the pilot flange. If it is less than 2.1245 inch, it should not be reused. The original 2.1250/2.1255 dimension of the crankshaft gear must be restored with a flash copper plate of up to .0005 inch max.

New Crankshaft Gear Part No.	Superseded Crankshaft Gear Part No.	Lockplate Part No.	Bolt Part No.	Dowel Part No.
13S19646 13S19647 13S19648	61155 67514 76786	LW-18639 LW-18638 LW-18638	STD-2213 STD-2209 STD-2209	STD-1065 (5/16 in. dia.)
13S19649	LW-10284	LW-10332	AN8-14A	STD-2078 (3/8 in. dia.)

CAUTION

Some old crankshaft gears are carborized all over. If carborized, they will not nick when a file is used on scallop. If carborized all over, gear should not be reworked.

7-54. Starter Ring Gear. The latest edition of Service Instruction No. 1141 contains all the information necessary to accomplish the replacement of the starter ring gear.

7-55. Crankcase - Modification of Center Main Bearing Supports to Incorporate Body Fit Thru-Studs. This modification to be performed on the following listed engines only.

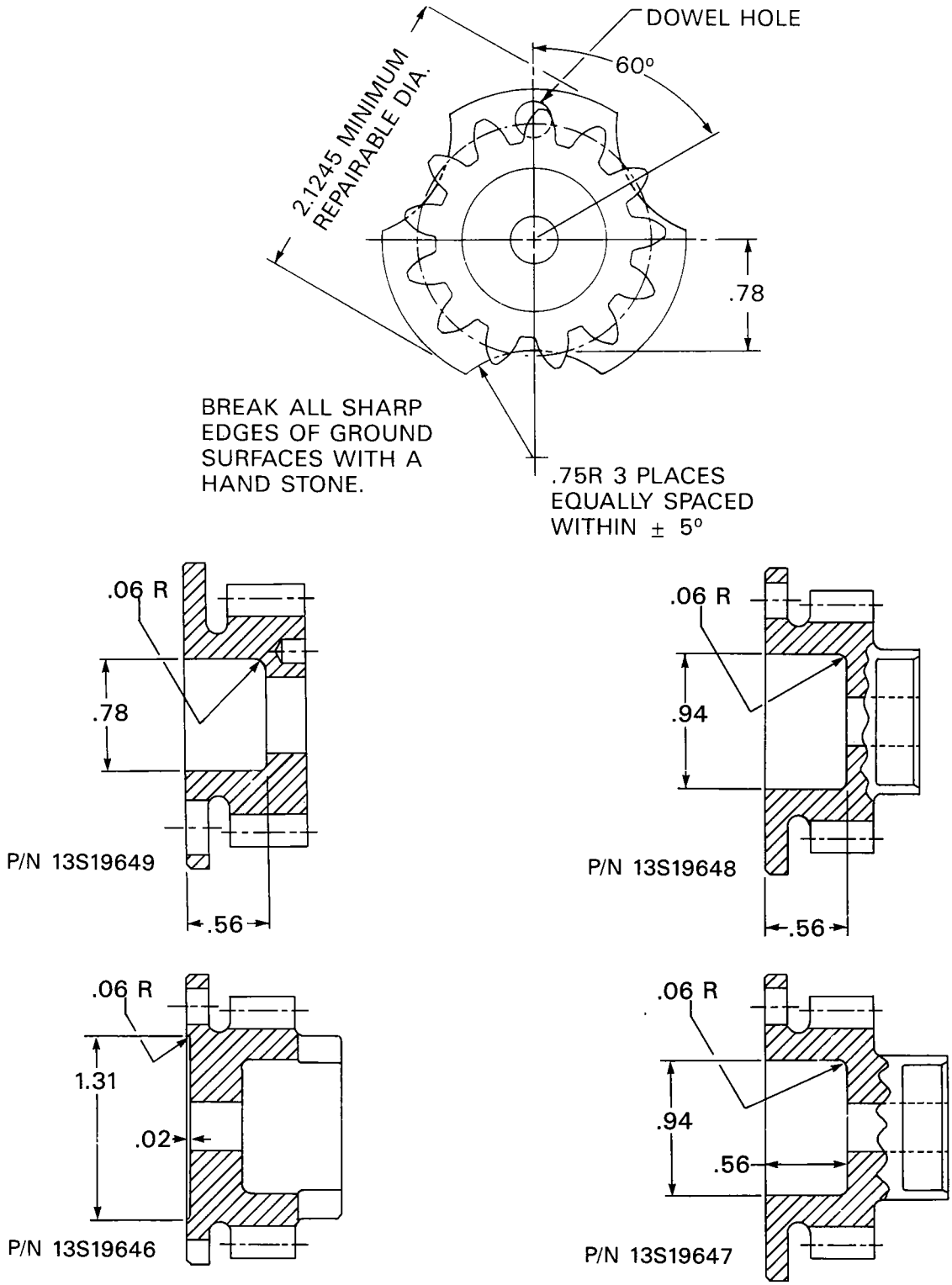

Figure 7-12E. Details for Rework of Crankshaft Gears to Current Configuration

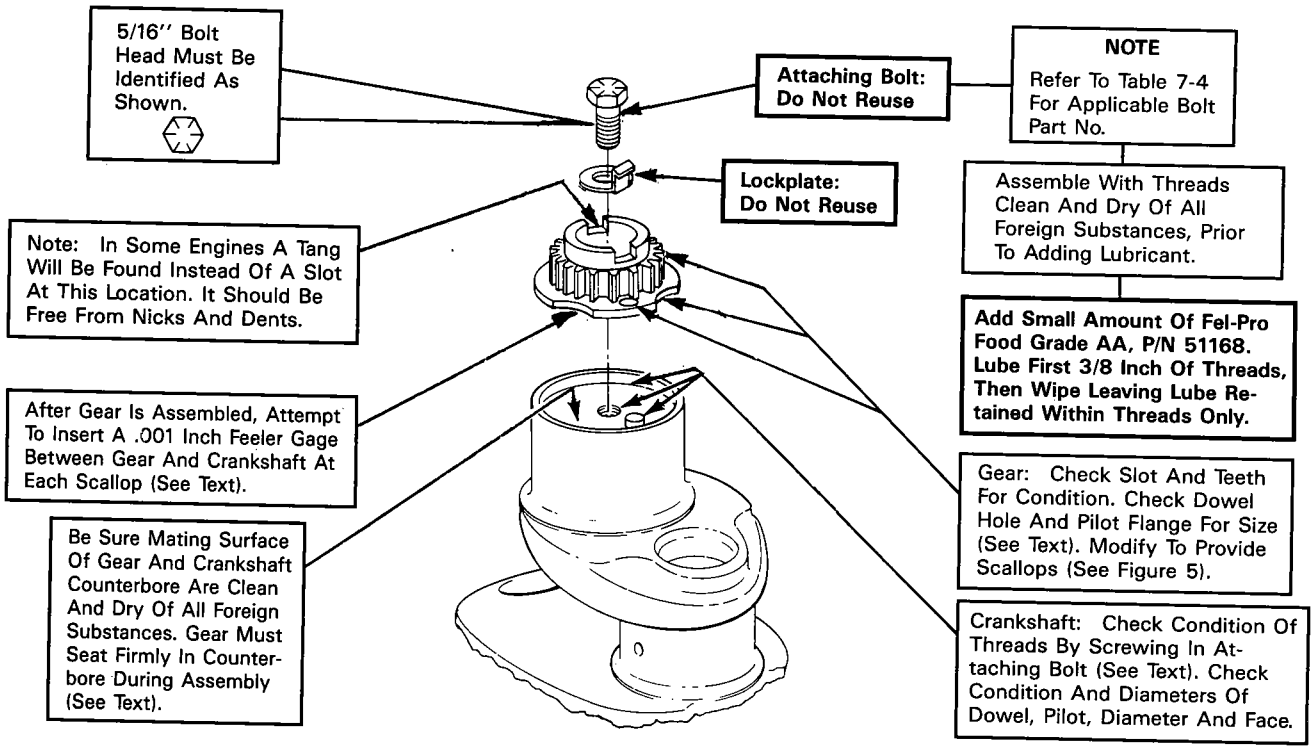

Figure 7-12F. Rear End View of Crankshaft Showing Associated Parts

CAUTION

No field repair of crankshaft gear attaching threads is permitted. Crankshafts requiring this type of repair **must be** returned to the factory through an authorized Textron Lycoming Distributor.

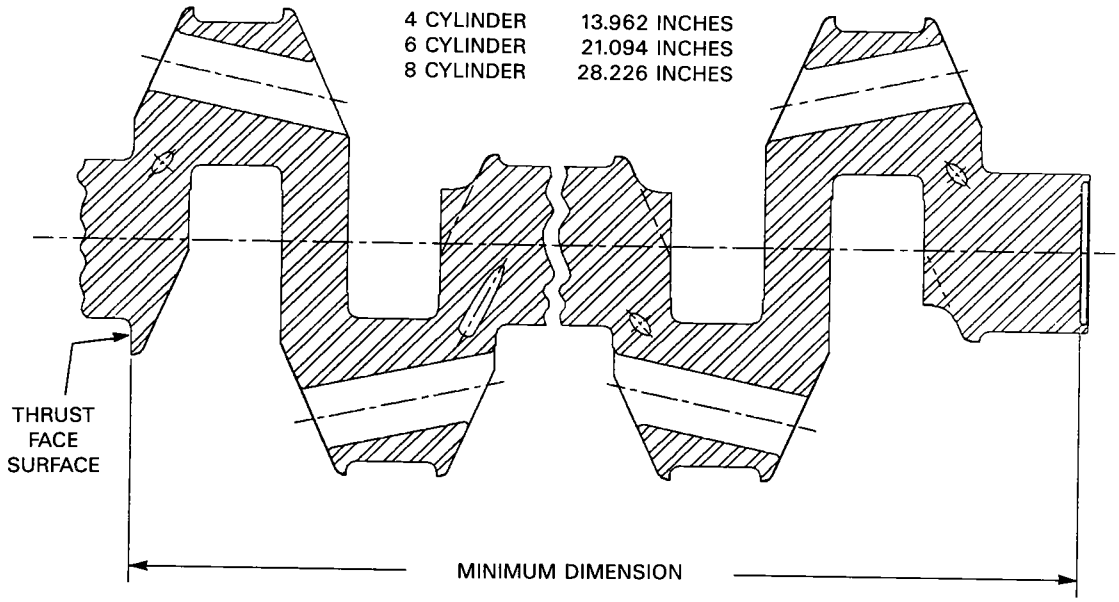

CAUTION

Insure minimum dimension is measured between thrust face surface and pilot.

Figure 7-12G. Minimum Dimension of Crankshaft

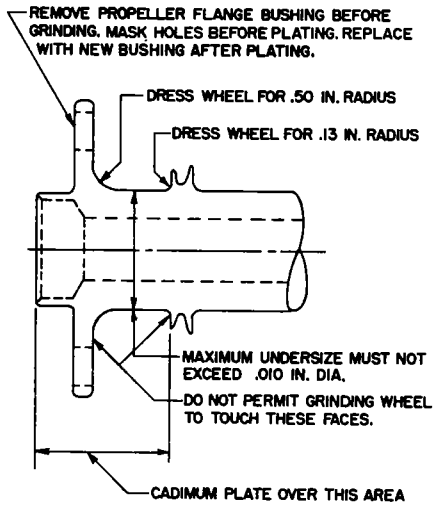

Figure 7-13. Reconditioning Crankshaft Oil Seal Surface

O-320-B Series	Engines prior to 3815-39
O-340 Series	Engines prior to 405-30
O-360-A, -C Series	Engines prior to 3042-36
O-540 Series	Engines prior to 2790-40

1. With the crankcase assembled as directed in paragraphs 7-34 and 7-35, loosen and remove the thru-studs from the locations shown in figure 7-11.

2. Place the crankcase with the odd numbered cylinder side down on eight inch parallel blocks.

3. Set the stop collar (P/N 64905) 5.75 inches above the cutting edge of special piloted reamer (P/N 64902).

4. Assemble the universal (P/N 64908) to a 1/2 inch electric drill motor, the reamer to the universal and proceed to ream 0.547 inch through thru-stud holes from the even cylinder number side. Continue reaming until the reamer reaches the collar. Make sure the drill and reamer has stopped before removal from the stud hole.

CAUTION

A liberal amount of kerosene must be constantly flowing into the hole as the reamer is passing through. This will prevent overheating and scoring.

5. Remove the stop collar from the 0.547 inch diameter reamer and assemble the collar 5.50 inches from the cutting edge of the 0.563 inch diameter finish reamer (P/N 64903).

6. Assemble reamer to universal and proceed to finish ream the holes, once again paying attention to the preceding "caution" note.

7. Disassemble crankcase halves and hand tap the anchor threads 0.007 inch oversize using tap (P/N 64907).

8. Use a 3/4 inch counterbore (P/N 64904) and standard tap handle to resize the oil seal counterbore hole. Exercise caution so as not to go deeper than the present depth. See figure 7-10.

9. Burr to clean up all rough edges caused by the reaming operations. Wash and clean the crankcase thoroughly.

10. Assemble new body fit thru-studs (P/N 72698-P07) in the threaded half of the crankcase. The same size "O" ring seal is used with the 9/16 inch thru-studs as was previously used.

7-56. Oil Relief Valve Sleeve (Non-adjustable oil relief valve). If the sleeve is badly scored or otherwise damaged, remove and replace the sleeve in the following manner.

1. Apply a liberal coating of heavy grease to the threads of a standard 1/2-20 bottoming hand tap. This will aid in subsequent cleaning of the relief valve bore, since loose metal particles resulting from the action of the tap will tend to adhere to the tap when it is withdrawn from the bore. Insert the tap into the relief valve bore, making sure that the tap is centered in the ball seat of the sleeve. Screw the tap into the sleeve a maximum of four full turns.

CAUTION

Do not rotate tap in excess of four full turns because the tap may damage the crankcase if it is inserted too far beyond the sleeve.

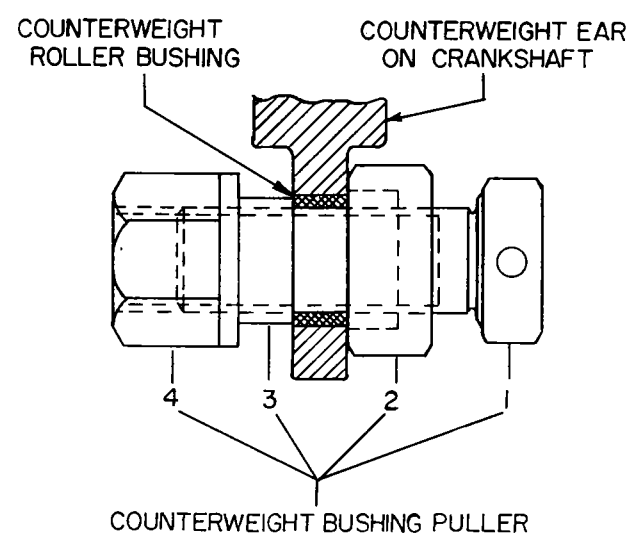

Figure 7-14. Removal of Crankshaft Counterweight Bushing

2. Draw the tap and sleeve straight out of the bore with a sharp quick pull.

3. Clean the relief valve bore thoroughly with petroleum solvent and a suitable bristle brush, taking care to see that all metal particles are removed. The sleeve seat in particular must be entirely free from foreign matter, or new sleeve will not seat properly.

4. Place a new relief valve sleeve into the crankcase bore with the seat end of the sleeve toward the crankcase. Make sure that the sleeve is centered in the bore, insert sleeve driver (ST-215) in the sleeve and drive sleeve into place with light hammer blows on the driver.

5. If the sleeve does not make a 0.001 press fit with the crankcase, but is loose, remove the standard size sleeve and install an 0.003 inch oversize sleeve exactly as described in Step "4" above.

CAUTION

In the event the hole in the crankcase is too small for installation of the 0.003 inch oversize sleeve, place the sleeve in a lathe and lap it sufficiently to fit the hole in the crankcase. Never ream the oil relief valve sleeve hole in the crankcase.

7-57. Oil Pressure Relief Valve (adjustable). The latest edition of Service Instruction No. 1172 contains the information relative to replacing the non-adjustable oil pressure relief valve assembly with the adjustable oil pressure relief valve assembly if required.

7-58. Crankcase - Fretting. Consult the latest edition of Service Instruction No. 1112 for information relative to inspection and repair of crankcases damaged by fretting.

7-59. Crankcase - Fretting. The latest edition of Service Instruction No. 1123 contains all the requirements necessary to modify the crankcase to prevent fretting.

7-60. Crankshaft Idler Gear Shaft Recess. Damaged or worn idler gear shaft recesses in the crankcase can be repaired as described in Service Instruction No. 1197.

REASSEMBLY

7-61. Crankshaft Sludge Tube Assembly (Where applicable). Support the crankshaft in a nearly vertical position and install new sludge tubes. Place a new sludge tube on the applicable drift, P/N 64547 for six and eight cylinder engines and P/N 64548 for four cylinder engines, and drive sludge tube to its correct depth. See figure 7-17 for four cylinder engines and figure 7-18 for six and eight cylinder engines.

NOTE

Sludge tubes are not employed in later model crankshafts. However, this is not to imply that sludge tubes can be removed and not replaced in those crankshafts originally using sludge tubes.

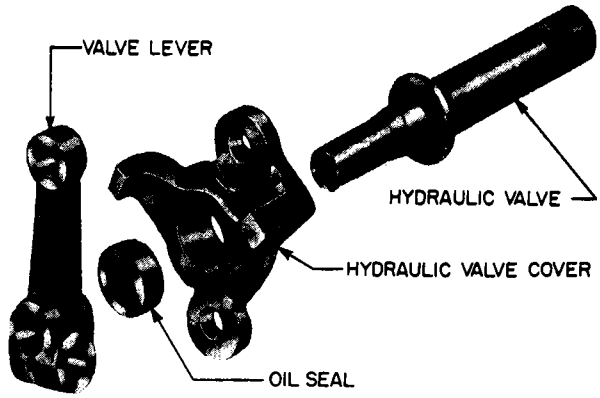

Figure 7-15. Hydraulic Valve Assembly

7-62. Expansion Plug. On engines equipped for fixed pitch propeller use the expansion plug installation drift (P/N 64681) to install a new expansion plug in place in the front of the crankshaft (see figure 7-17) with the convex side toward the front. Be sure the plug fits firmly against the shoulder provided for it on the inside diameter of the crankshaft.

7-63. Plug. On engines equipped for controllable pitch propeller, a plug is installed at the rear of the bore in the front of the crankshaft. If this plug has been removed during overhaul, install a new plug by sliding it sideways past the crankshaft propeller oil tube (see figure 7-17). When the plug is properly positioned in the rear of the bore (flange forward) insert the oil plug drift (P/N 64770 for 1-3/4 inch plug, P/N ST-46 for 1-3/8 inch plug) and seat the plug with several sharp hammer blows on the drift.

NOTE

Some crankshaft employ a 1-1/4 inch plug. This size plug cannot be replaced in the field. The crankshaft must be returned to Textron Lycoming for repair.

7-64. Propeller Flange Bushings. If the propeller flange bushings have been removed from the crankshaft, new bushings must be installed. Use the crankshaft flange bushing replacement tool (ST-115) to install new bushings. Consult the applicable Parts Catalog for proper location of the bushings.

7-65. Crankshaft Gear. Assemble the gear to the crankshaft **using both a new lockplate and bolt.** Refer to Figure 7-12F. The correct bolt, lockplate and dowel for each gear are shown in Table 7-4. Tighten the bolt to 125 inch lbs. torque, then with a hammer and brass drift, tap lightly around the pilot flange of the gear and listen for sharp solid sounds from the hammer blows that would indicate that the gear is seated against the crankshaft. As a check on seating against the crankshaft, attempt to insert a pointed .001 inch thick feeler gage or shim stock between the gear and crankshaft at each of the three scallops. The .001 feeler gage, or any smaller feeler gage, must **NOT** fit between the two sur-

faces at any location. (.001 feeler gage is used as an indicator, however there must be no clearance between crankshaft and gear.) Retighten the gear attaching bolt to the proper torque. Tighten the 5/16 inch bolt to 204 inch-pound torque or the 1/2 inch bolt to 660 inch-pound torque. Measure the clearance between the O.D. of the gear flange and the pilot I.D. of the crankshaft. There should not be more than .0005 inch clearance at any point. Bend the lockplate against the bolt head.

7-66. Counterweight Assembly. When assembling counterweights which have previously been installed on the engine, use the identifying marks, made on the various parts during disassembly, to enable matching each washer with the proper seat on the counterweight from which it was removed. Install washer (10) and retaining ring (11) on one side of the counterweight (8), place the counterweight on its proper ear on the crankshaft, insert the roller (9) and secure the assembly by installing the washer and retaining ring on the second

TO SEPARATE DOWELED CRANKCASES

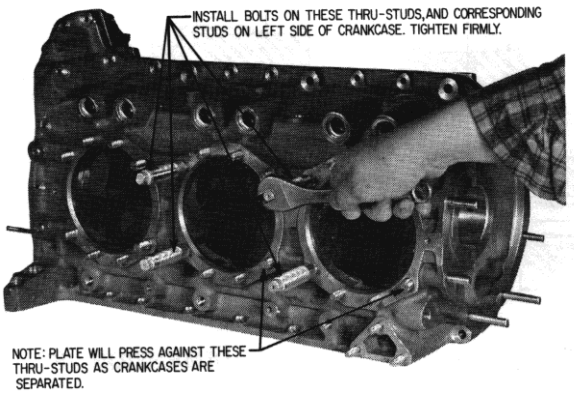

Step 1. Right Side of Crankcase Showing Installation of Bolts on Half-Inch Cylinder Studs

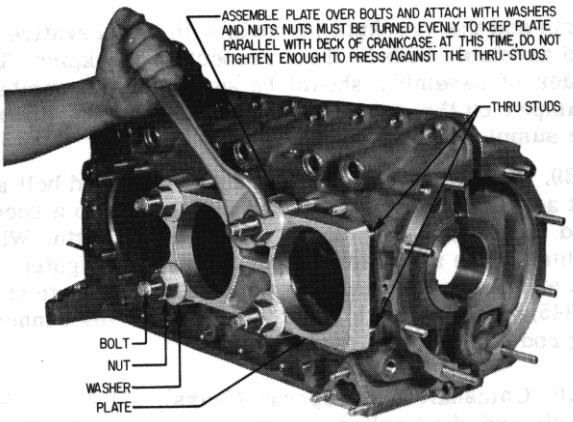

Step 2. Right Side of Crankcase Showing Installation of Plate

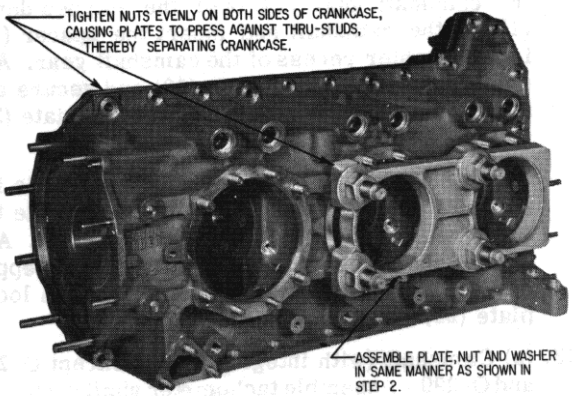

Step 3. Left Side of Crankcase Showing Installation of Plate

TO ASSEMBLE DOWELED CRANKCASES

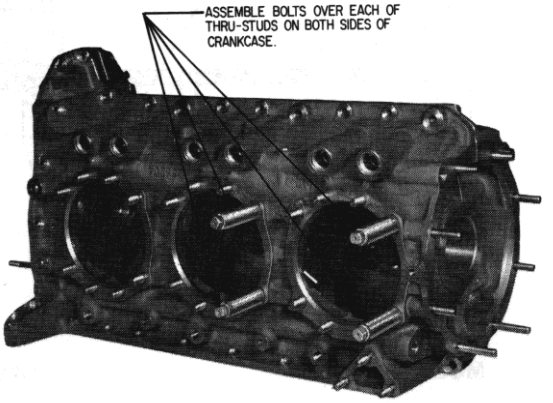

Step 1. Right Side of Crankcase Showing Bolts Installed on Thru-Studs

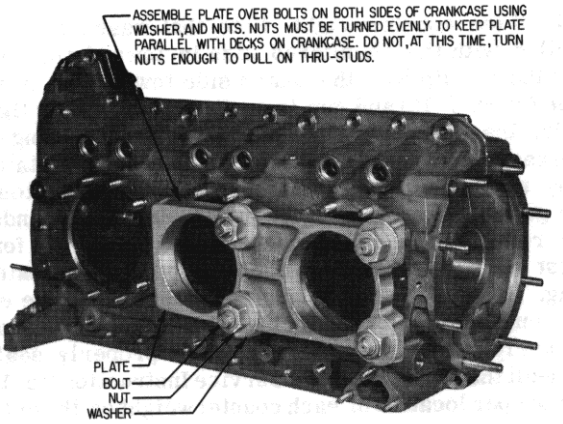

Step 2. Right Side of Crankcase Showing Plate Assembled Over Bolts

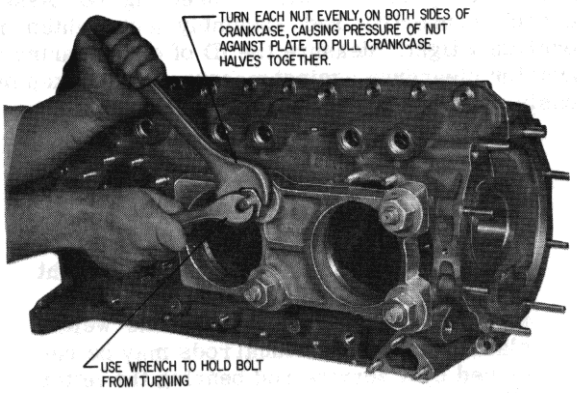

Step 3. Right Side of Crankcase Showing Pressure Plate Utilized to Pull Halves of Crankcase Together

Figure 7-16. Separation and Assembly of Doweled Crankcases Using Pressure Plates

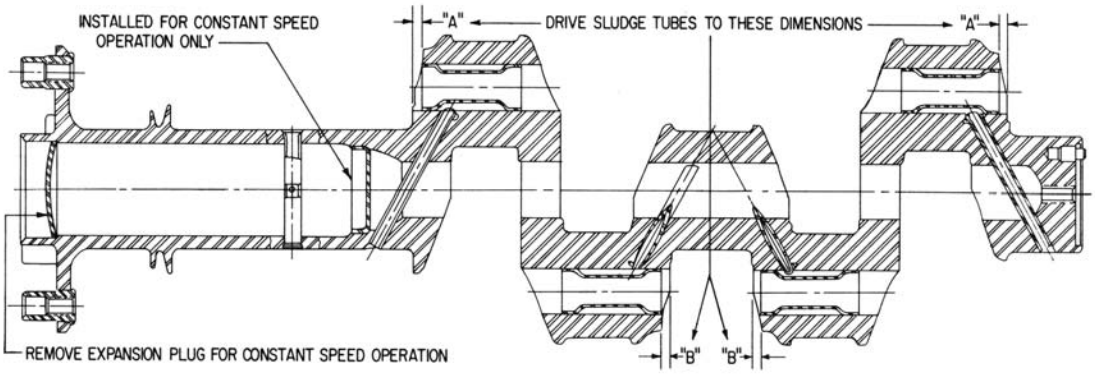

MODEL	DIMENSION "A"	DIMENSION "B"
O-235, O-290	0.20 inch	0.20 inch
O-320, O-340	0.20 inch	0.20 inch
O-360	0.25 inch	0.31 inch

Figure 7-17. Dimensions to Drive Sludge Tubes (Four Cylinder Engines)

side of the counterweight. Install the circlip with the sharp edge of the circlip towards the outside as shown in Figure 7-19. Insert one end of the counterweight retaining ring gap gage (P/N 64892) between the ends of the retaining ring, making sure the gage is resting on the bottom of the groove. The gage must pass between the ends of the retaining ring and, when rocked back and forth, must clear the inside edge of the top of the retaining ring. If the gage does not pass freely between the ends and under the top of the ring, the ring is not seated properly. Make sure all rings are properly seated. Consult the latest revision of Service Instruction No. 1012 for proper location of each counterweight on the crankshaft.

7-67. Connecting Rods. Assemble two new connecting rod bolts in each connecting rod cap and install new bearing inserts in the connecting rod and connecting rod cap, making sure the tang of each bearing insert enters locating slot in cap and connecting rod. Assemble each connecting rod assembly and tighten nuts moderately tight. Measure the ID of each bearing and check for clearance against measurements taken previously on the diameter of crankpin journals.

NOTE

Connecting rods are marked at manufacture with the part number followed by a letter (A through E) designating weight groups. Replacement sets of rods must be of the same weight classification. Individual rods may be replaced by a service rod bearing the letter "S".

7-68. Place the crankshaft on a suitable support on the bench so that all crankpins are free for installation of connecting rods. Disassemble connecting rods after checking ID, thoroughly coat both inserts and the crankpin journals with preservative oil and assemble rods on their respective crankpins. The order of assembly must be such that the numbers stamped on the caps and rods will be down (toward the sump).

7-69. There are two types of connecting rod bolt and nut assemblies employed. One is tightened to a specified torque and the other to a stretch length. When tightening to a stretch length alternately tighten the nut and check the length using stretch bolt gage (P/N 64945). If the stretch limit is exceeded. The connecting rod bolt must be replaced.

7-70. Camshaft (With Separate Gears). See Figure 7-5. On six and eight cylinder engines assemble the Woodruff key (3), install the governor drive gear (2) and secure with retaining rings (1).

7-71. (a) Camshaft (with separate gears) Except O-235 and O-290 – Secure the tachometer shaft (16) to the end of the camshaft with a pin (15). Assemble the camshaft gear (14) over the stepped dowel (12) on the camshaft and insert the spacer (18) into the center recess of the camshaft gear. Assemble the breather slinger (19) and secure assembly to the camshaft gear with lockplate (20) and hex. head screw (21).

(b) (O-235, O-290) – The tachometer shaft is installed in the accessory housing. Assemble the tachometer drive pin (15) in the camshaft. Assemble the camshaft gear (14) over the stepped dowel (12) and secure to the camshaft with lockplate (20) and hex. head screw.

7-72. (a) Camshaft (with integral gears) Except O-235 and O-290 – Assemble tachometer shaft centering spacer and install pin and tachometer shaft, secure with retaining ring.

(b) (O-235, O-290) – Install pin and tachometer shaft in camshaft gear and secure with retaining ring.

7-73. Crankcase. Place both crankcase halves on a suitable stand that allows the rods to pass freely through the crankcase with the interior of each half of the crankcase facing upward. Place new bearing inserts in the center and rear main bearings of both crankcase halves.

NOTE

The tang of each insert must fit into the recess in the crankcase.

Temporarily position the front main bearing in place in the left crankcase half. Ensure that the bearing is properly seated on the two dowels.

NOTE

The front main bearing, unlike the center and rear bearings, splits on the horizontal centerline of the engine.

Use a pencil to mark a vertical reference on each bearing and the crankcase, at any convenient point along the line of intersection, to locate the bearing radial and axial planes.

NOTE

These marks are necessary to ensure proper seating of the bearing halves on the two locating dowels when the crankshaft is placed into position in the crankcase.

NOTE

O-235-C, O-290-D, O-290-D2 series and O-320-E2D do not employ the front main bearing described. They employ the same main bearings in all locations. Also if the O-235-C, O-290-D and O-290-D2 use a hydro control valve they employ a different front main bearing. Consult the appropriate Parts Catalog.

7-74. Propeller Governor Drive. See Figures 7-3 and 7-4. The propeller governor drive is located on the front left-hand side of the crankcase.

NOTE

This drive assembly must be installed before the crankcase halves are assembled.

NOTE

Engines that are built with the set screw incorporated are assembled with a P/N LW-14021 idler gear shaft. Engines that are built with the P/N MS-9048-111 spring pin incorporated a P/N 77876 idler gear shaft. Replace P/N 77876 idler gear shaft with a P/N LW-14021 idler gear shaft.

a. Lubricate the propeller governor drive shaft gear with a mixture of 15% STP and 85% aviation-grade oil.

b. Place a new accessory driven gear washer over the end of the shaft.

c. Secure the shaft in place using a 13/16 inch diameter external retaining ring.

d. Insert the dowels in the propeller governor idler gear assembly.

e. Place the governor driven gear in the drive housing at the front left of the crankcase.

f. Place a washer on the threads of the hex head plug.

g. Screw the hex head plug into the end of the idler gear shaft.

h. Insert the set screw into the idler gear shaft. Ensure that the set screw enters the hole in the idler shaft before tightening the screw.

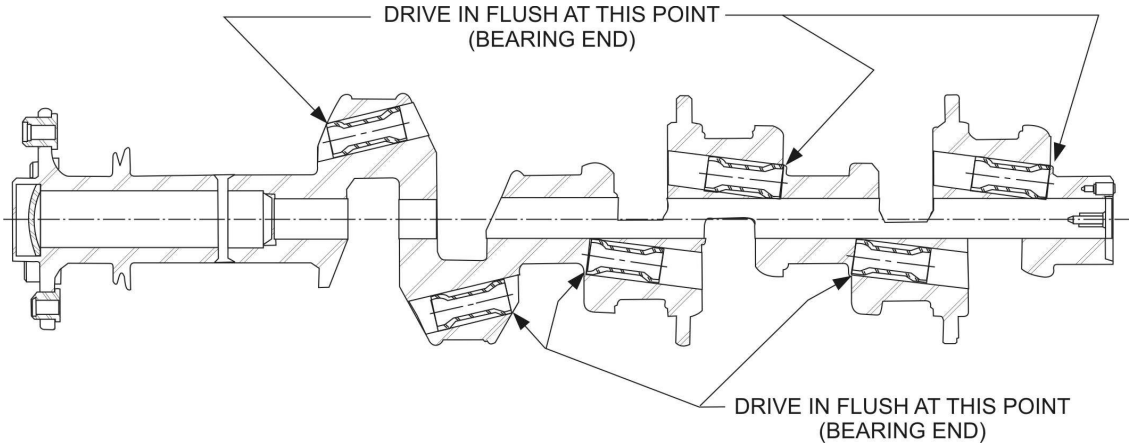

Figure 7-18. Dimensions to Drive Sludge Tubes (Six and Eight Cylinder Engines)

i. Remove the set screw and apply a light coat of Loctite 290 to the set screw. With a clean lint-free cloth wipe away any excess Loctite 290.

j. Install and tighten set screw.

k. Using a center punch with a 3/32 inch diameter shaft, at the top of the tapered point, peen the threads of the hole directly on top of the set screw to prevent the screw from backing out.

NOTE

To ensure that there is adequate material in the set screw hole to peen on top of the screw, it may be necessary to select a screw that is shorter than the one previously removed. Also, a smaller diameter center punch may be required to reach the top of the shorter set screw. (Lycoming personnel use one ground to an approximate 50°/60° included angle. Refer to Table 1 to determine the set screw dimension and part number.) See Figure 7-18A.

TABLE 1

DESRIPTION	PART NO.
Set Screw – 10-32 x .19 inch long	AN565B1032H3
Set Screw – 10-32 x .25 inch long	AN565B1032H4
Set Screw – 10-32 x .31 inch long	AN565B1032H5

l. Place the idler gear shaft through the opening in the housing and through the idler gear assembly inside the crankcase.

m. Install the bushings over the end of the idler gear shaft.

n. Determine the thickness of the thrust washer required to achieve a clearance of 0.021 inch using a feeler gauge between the crankcase and spacer.

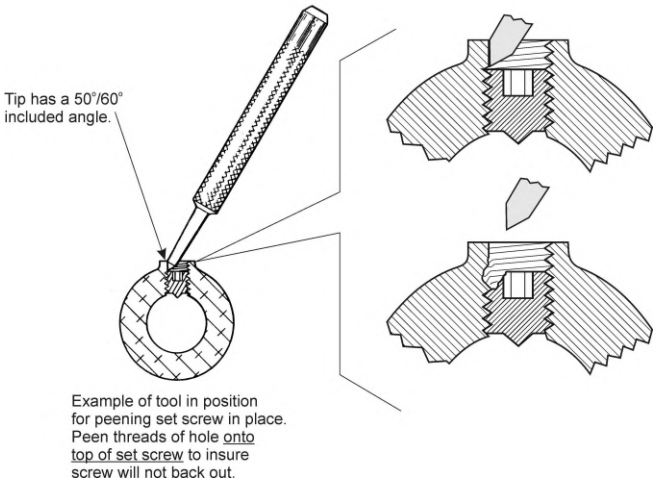

Figure 7-18A.

7-75. See Figure 7-5. Assemble an idler gear shaft (29) to the rear of each crankcase half in the following manner.

a. Insert the pilot of the shaft into the hole in the crankcase.

b. Turn the shaft until the holes of the pilot flange align with the drilled holes in the mounting pad of the crankcase.

c. Place a lockplate (28) over the flange.

d. Secure with the applicable fastenings (27). Consult the appropriate Parts Catalog.

7-76. Place the left crankcase half on a suitable support on the bench with the cylinder pads down.

CAUTION

THERE MUST BE APPROXIMATELY 6 INCHES OF CLEARANCE BETWEEN THE CRANKCASE AND THE BENCH.

7-77. Lay the right crankcase half on the bench with the cylinder pads down.

7-78. A counterbored recess is provided for an oil seal ring at each bolt and stud location. Install a new oil seal ring at the base of each stud.

NOTE

Oil seal rings are not used at center saddles that are doweled nor at center saddles on O-320 and O-360 wide cylinder flange models using thru-studs that are not attached by screw threads.

7-79. Lubricate the face of each tappet body with Lubri-Bond (A) or equivalent, and reinstall in the same location in the crankcase.

NOTE 1

New tappet bodies must be installed whenever a new camshaft is installed.

NOTE 2

Roller tappets are not field repairable and must be replaced at overhaul or after a propeller strike.

7-80. Using Texaco Molytex EPO or equivalent pre-lubricate the camshaft lobes and bearings. Lay the camshaft in position in the right crankcase half. Loop a soft wire around an adjacent cylinder pad stud in such a manner as to hold the camshaft in place when the crankcase is turned over. See Figure 7-2.

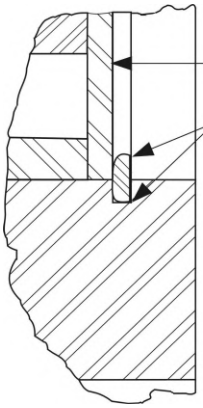

Figure 7-19. Assembly of Washer and Circlip In Counterweight

7-81. Using engine oil pre-lubricate the main bearing journals of the crankshaft and the rear and center main bearings in the left crankcase half. Remove the front main bearing halves from the left crankcase half and coat each bearing half liberally and assemble the bearing on the crankshaft. Rotate the bearing on the journal so that the three oil transfer holes will be uppermost when the crankshaft is placed in the left crankcase half. Pick up the assembled crankshaft by the odd numbered connecting rods and lower the crankshaft into the left crankcase half permitting the even numbered rods to protrude through their respective cylinder mounting pads. Using the reference marks made previously adjust the front main bearing so that the halves are seated squarely on the locating dowels.

7-82. See Figure 7-24. If either the crankcase or the crankshaft has been replaced, then the crankshaft end clearance must be checked. With the crankshaft seated in the left crankcase half, move the crankshaft as far aft as possible and check the clearance of the crankcase thrust point at Point A. The clearance must be between 0.009 and 0.026 inches (see Table of Limits, Reference 506). Move the crankshaft as far forward as possible and check the crankshaft oil slinger clearance at Point B. The clearance must be between 0.002 and 0.007 inches (see Table of Limits, Reference 507). If additional clearance is needed, regrind the front face of the crankshaft slinger (Point B) Recheck the clearance as indicated above.

7-83. Using engine oil, pre-lubricate the main bearings of the right crankcase half.

7-84. CAUTION

ONLY LYCOMING APPROVED SEALANTS ARE TO BE USED IN THIS APPLICATION. USE OF ANY OTHER NON-APPROVED SEALANT COUND RESULT IN A LOSS OF CLAMPING FORCE AND/OR TROQUE, WHICH WILL RENDER THE ENGINE UNAIRWORTHY.

NOTE

The choice of cleaning agents should be limited to approved consumables complying with local, state and federal regulations. The toxicity of cleansing agent will, however, depend on the type of contamination encountered on the part to be cleaned. Use the least toxic of available cleaning materials which will satisfactorily accomplish the work.

CAUTION

ON SOME LYCOMING PARTS, PROTECTIVE COATINGS ARE APPLIED TO THE PARENT METAL. TAKE PARTICULAR CARE WHEN SELECTING THE CLEANING METHOD TO ENSURE THAT THESE PROTECTIVE COATINGS ARE NOT REMOVED FROM THE PARENT METAL. DO NOT USE ALKALIES ON ALUMINUM, MAGNESIUM, ALUMINIZED AND PAINTED AREAS.

USING METHYL-ETHYL-KETONE OR EQUIVALENT, CLEAN ALL TRACES OF SEALANT AND SILK THREAD (IF PRESENT) FROM THE CRANKCASE PARTING SURFACES.

See Figure 7-19A for proper application of POB and silk thread or Figure 7-19B for application of RTV-102 or Loctite-515 sealants.

Sealing of crankcase parting surfaces with POB sealant and "00" silk thread is as follows:

POB sealant, a non-hardening compound, is to be applied only to one half of the crankcase. On the outside mating surfaces, as shown in Figure 7-19A, apply a thin film of POB sealant. No build-up is permissible. Visibly, where sealant is applied, it should produce only a wet appearance on the machined surface. If the crankcase halves are not mated together within one hour of the application of the sealant then the mating surfaces will need to be re-cleaned and the sealant reapplied. Note that this sealant is used primarily to hold the silk thread in place. Be certain to wipe clean all inner edges of any excess sealant. Also ascertain that no sealant has come in contact with the bolt holes or any surface other than the shaded area shown in Figure 7-19A.

After sealant is properly applied, run lengths of "00" silk thread on the inside of the bolt holes without touching together and press firmly into solvent to keep thread in place.

Sealing of crankcase parting surfaces with RTV-102 or LOCTITE-515 sealant is as follows:

NOTE

Silk thread is not required when RTV-102 or LOCTITE-515 is used.

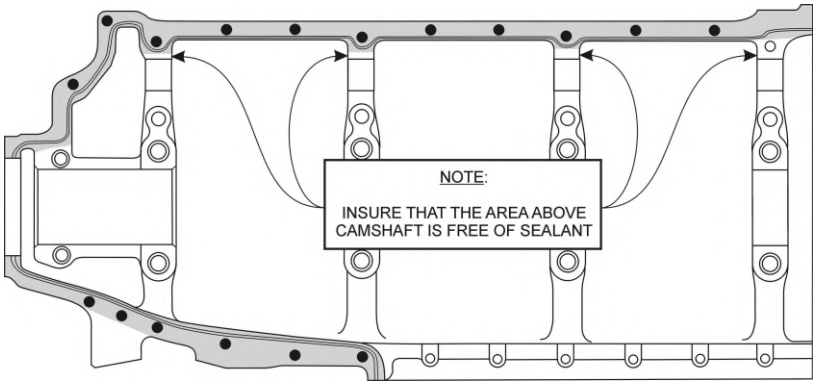

Figure 7-19A. Sealing Area for POB Sealant and "00" Silk Thread

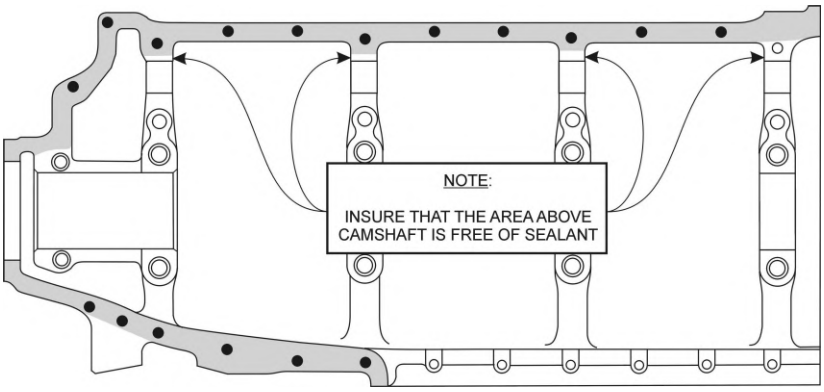

Figure 7-19B. Sealing Area for RTV-102 and LOCTITE-515

RTV-102 or LOCTITE-515 is to be applied only to one half of the crankcase. On the outside mating surfaces, as shown in Figure 7-19B, apply a thin film of sealant. No build-up is permissible for this application. RTV-102 sealant will be a white semi-solid as it is applied. LOCTITE-515 sealant will be a dark purple semi-solid as it is applied. If the crankcase halves are not mated together within one hour of the application of either sealant, then the mating surfaces will need to be re-cleaned and the sealant reapplied. Be certain to wipe clean all inner edges of any excess sealant. Also, clean all inner edge of excess sealant. Also ascertain that no sealant has come in contact with bolt holes or any surface other than the shaded areas shown in Figure 7-19B.

7-85. Lower the right half of the crankcase so that the studs align properly with the left half. If necessary, tap the right half gently with a mallet to facilitate assembly. However, no difficulty will be encountered if the two halves are kept parallel while the right is being lowered onto the left. After the cases are together, tap the right half with a mallet to seat it securely all around the periphery.

NOTE

Crankcases that are doweled at the thru-studs can only be brought together as described above to the point where the dowels are encountered. At this point assemble the pressure plate as described in Figure 7-16 and complete the assembly.

7-86. Install all crankcase fastenings. Consult the applicable Parts Catalog for correct attaching parts.

7-87. In order to insure uniform locating on the main bearings, it is necessary to tighten the studs and bolts in the following sequence.

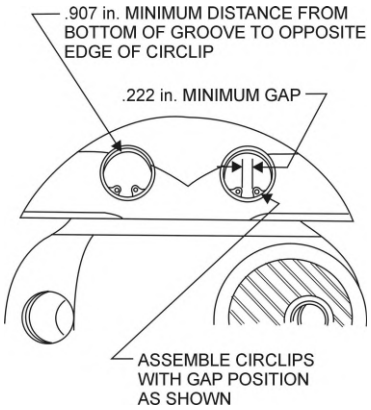

Figure 7-20. Location of Gap When Installing Retaining Rings

7-88. Install torque hold down plates (ST-222 or equivalent) at cylinder pads.

7-89. Install nuts on free ends of 1/2 inch thru-studs and using the sequence specified in figure 7-21, 7-22 or 7-23, whichever is applicable, tighten to 300 inch pounds.

NOTE

O-320 and O-360 wide cylinder flange models using 1/2 inch body fit thru-studs with both free ends must be tightened from both sides simultaneously. Make sure this type of thru-stud is assembled with equal lengths extending from both sides of the crankcase.

7-90. Using same sequence specified in paragraph 7-89, tighten nuts on the thru-studs to 600 inch pounds.

NOTE

O-235 series engines employ 3/8 inch thru-bolts and are only tightened to 300 inch pounds.

7-91. Torque 3/8 inch nuts at front main bearing (4, figure 7-21; 5, figure 7-22 or 6, figure 7-23) to 300 inch pounds.

7-92. Using sequence specified (5 thru 9, figure 7-21; 6 thru 12, figure 7-22 or 7 thru 15, figure 7-23) tighten 1/4 inch nuts at crankcase parting face to 75 inch pounds.

7-93. Torque 3/8 inch nut (10, figure 7-21; 13, figure 7-22 or 16, figure 7-23) at camshaft bearing to 300 inch pounds.

7-94. Using any sequence tighten the remaining 1/4 inch nuts at crankcase parting face to 75 inch pounds.

7-95. Assemble the crankshaft oil seal 18, figure 7-1 in the following manner. Assemble the seal with the

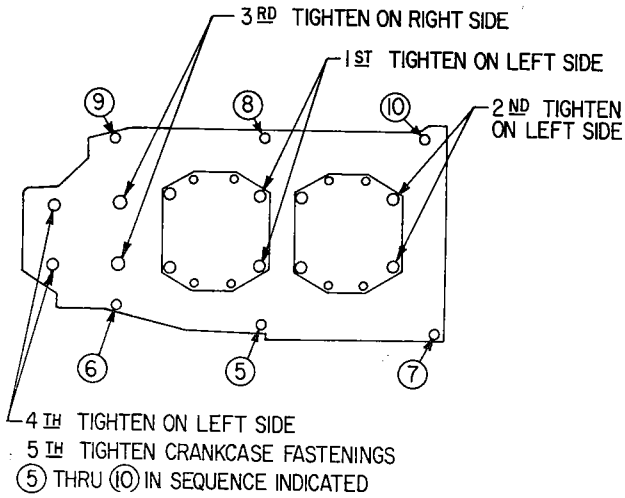

Figure 7-21. Crankcase Tightening Sequence (Four Cylinder Engines)

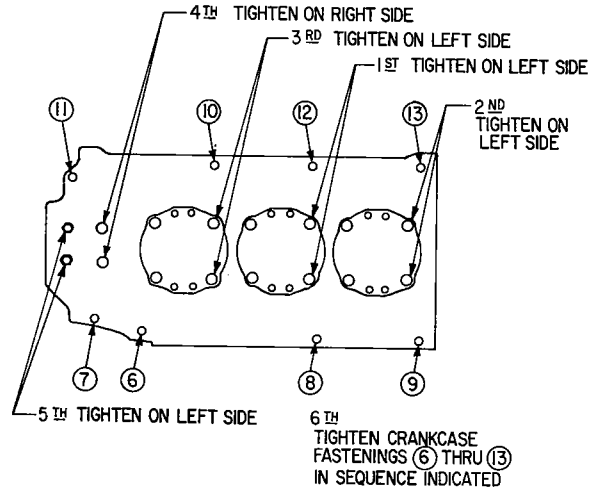

Figure 7-22. Crankcase Tightening Sequence (Six Cylinder Engines)

split located at the 1:00 o'clock position on right hand (standard) rotation and 11 o'clock position on left hand (reverse) rotation engines viewed facing propeller end of engine.

NOTE

Crankshaft oil seal may have either a flat surface OD and held in place by retaining plates (19, figure 7-1) or a raised lip on the OD to enter a machined groove in the crankcase. These seals are not interchangeable.

7-96. Coat the OD of the seal and the split of the seal with No. 20 Pliobond or Silastic 140 sealant. Assemble the seal uniformly in the crankcase with the lip matching at the split. Be sure no pliobond gets on the I. D. of the seal or on the crankshaft. See Service Instruction No. 1303 for method of installing solid ring oil seal.

NOTE

Crankshaft oil seal may have either a flat surface OD and held in place by retaining plates (19, figure 7-1) or a raised lip on the OD to enter a machined groove in the crankcase. These seals are not interchangeable.

7-97. Hydro Control Valve (O-235, O-290 series, where applicable). See figure 7-15. The oil seal in the valve cover should be replaced. This seal, which is a drive fit with the cover, should be driven into the bore with a suitable tool until it forms a flush surface with the face of the boss on the valve cover. Install valve body, valve cover and valve lever.

7-98. Generator or Alternator Drive Belt (where applicable) and Ring Gear Support Assembly. Place the drive belt in the pulley of the ring gear support and assemble the ring gear support over the propeller flange bushings. Be sure the bushing hole in the ring gear support bearing the identification "O" is assem-

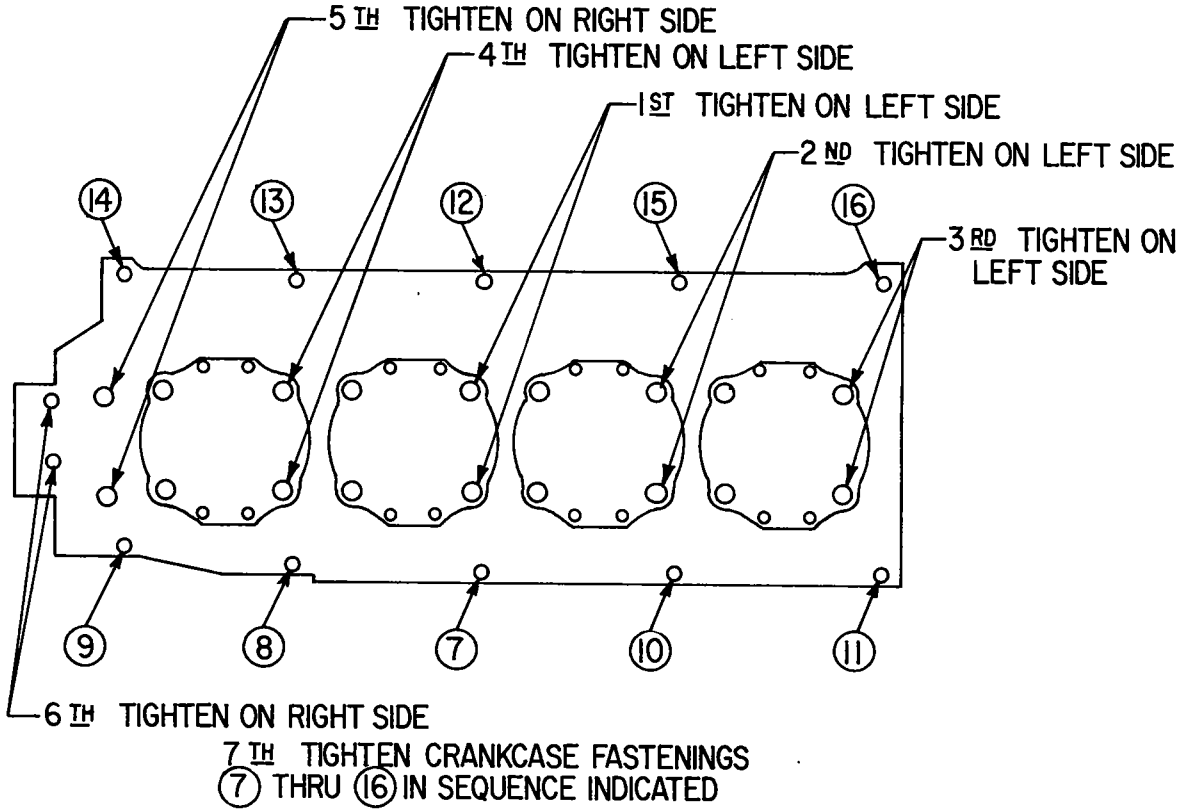

Figure 7-23. Crankshaft Tightening Sequence (Eight Cylinder Engines)

bled over the flange bushing also identified with "O" etched on crankshaft flange next to bushing. The starter ring gear must be located correctly to assure proper alignment of the timing marks on the ring gear.

7-99. Crankshaft Idler Gears (4 cylinder engines). Place the crankshaft idler gear on the idler gear shaft located to the left between the camshaft gear and the crankshaft gear. The crankshaft idler gear is marked in two places with a small etched circle. One of these marks is located at the space between gear teeth and the second is located on a gear tooth. The camshaft gear is marked with two etched circles on adjacent teeth, while the crankshaft is marked with an etched circle on one of the gear teeth. The marked tooth on the idler gear must mesh with the space between the marked teeth on the camshaft gear, while the marked space on the idler gear must mesh with the marked tooth of the crankshaft gear. See figure 2-7.

7-100. The crankshaft idler gear must be assembled in its proper relationship with both the camshaft gear and the crankshaft gear because no other combination of these three gears will permit correct valve timing. Assemble the second crankshaft idler gear on the idler gear shaft on the right side. The position of the timing mark on this gear is immaterial. Check the backlash between gears.

7-101. Crankshaft Idler Gears (6 cylinder engines). Place the left crankshaft idler gear on the idler shaft located to the left and between the camshaft and crankshaft gears. It will be noted that this dual gear is marked in three different places with timing marks in the form of small etched circles. The smaller diameter gear is marked at one place with the etched circles on two adjacent teeth and at another place a single tooth is marked. The larger diameter gear is marked at one place with the etched circles on two adjacent teeth, and the crankshaft gear has small etched circles on single gear teeth at two different locations. The single marked tooth on the idler gear must mesh with the two marked teeth of the camshaft gear while the marked teeth on the crankshaft gear must mesh with the marked teeth of the idler gear. (See figure 2-8).

7-102. Install the right crankshaft idler gear in place on the idler shaft making sure that the second marked tooth on the crankshaft gear meshes with the space between the two marked teeth on the smaller gear surface of the idler gear. (See figure 2-8).

7-103. Note that the magneto gears shown in figure 2-8 are marked with a circle on one tooth. This tooth must mesh between the two circles etched on adjacent teeth of the larger diameter gear of the crankshaft idler gears.

7-104. Crankshaft Idler Gears (8 cylinder engines). Place the left crankshaft idler gear on the idler shaft located to the left and between the camshaft gear and crankshaft gear. It will be noted that this dual gear is marked in three different places with timing marks in the form of small etched circles. The larger diameter gear is marked at one place with the etched circles on two adjacent teeth and at another place a single tooth

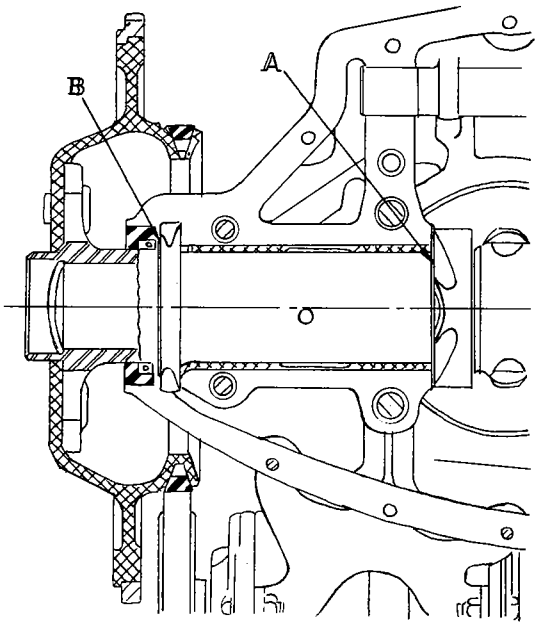

Figure 7-24. Checking Crankshaft End Clearance

is marked. The smaller diameter gear is marked at one location with the etched circles on two adjacent teeth. The camshaft is marked with small etched circles on two adjacent teeth and the crankshaft gear is marked at one location with one circle. The single marked tooth of the idler gear must mesh with the two marked teeth on the camshaft gear while the marked tooth of the crankshaft gear must mesh with the two marked teeth on the idler gear. See figure 2-9.

7-105. Install the right crankshaft idler gear in place on the idler shaft, meshing the etched circle on the crankshaft gear between the two marked teeth on the larger gear surface of the idler gear.

7-106. Note that the magneto gears shown in figure 2-9 are marked with an etched circle on two adjacent teeth. The single tooth etched with a circle on the smaller diameter idler gear surface must mesh between the two marked teeth on the magneto gear.

SECTION 8.

OIL SUMP AND FUEL INDUCTION

8-1. General. To accomodate the number of engine models, covered in this manual, a number of oil sump configurations are employed. Basically all oil sumps are similar and overhaul procedures will apply to all models unless specifically called out to the contrary.

8-2. Various carburetors and fuel injectors are employed on the engine models covered in this manual. No attempt will be made to describe their overhaul. Overhaul information for these trade accessories may be obtained from their respective manufacturers.

8-3. Two methods of assembling intake pipes are employed. One method employs a plain end intake pipe and connections in the oil sump. The second method employs a flanged end which is assembled directly into the oil sump or induction housing.

DISASSEMBLY

8-4. Intake Pipes. Loosen and remove the capscrews that attach the intake pipe flange to the cylinder intake port. Depending on installation, either loosen hose clamps and slide intake pipe off connection or pull intake pipe from the sump or induction housing. Discard the "O" rings. Mark the intake pipes as they are removed from the engine so they may be reassembled in the same location from which they were removed. Engines employing tunes induction will have intake pipes matched in length and diameter.

8-5. Carburetor or Fuel Injector. Remove the carburetor or fuel injector from either the air inlet housing or from the mounting pad on the sump. Remove the air inlet housing on installations employing same. Carburetor or fuel injector mounting pads may be incorporated on either the bottom, front or rear of the oil sump.

8-6. Oil Suction Screen. See figure 8-1 thru 8-4. The oil suction screen housing may be found at any number of locations on the sump. Unscrew the hex head plug and remove gasket and oil suction screen.

8-7. Induction Housing (IO-540, TIO-540). See figure 8-3. Remove the air inlet housing from the sump and induction housing. Remove the induction housing from the bottom of the sump. Remove the studs (14) and clamps (15) that secure the intake pipe extensions and remove the extensions (16).

8-8. Induction Housing (IO-720-A, -C). See figure 8-4. Remove the induction housing (8) from the bottom of the sump.

8-9. Induction Housing (IO-720-B). Remove the air inlet housing from the induction housing. Remove the induction housing cover and the induction housing. Remove the studs and clamps that secure the intake pipe extensions and remove the extensions.

8-10. Oil Sumps - Remove the fastenings from the periphery of the sump and remove the sump.

CLEANING

8-11. Oil Sump - Clean the sump according to the general instructions contained in Section 3. Clean the oil passages with solvent and a suitable brush and blow out with compressed air. Do not clean the oil suction screens until they have been inspected for metal particles.

8-12. Carburetors - Clean the carburetors in accordance with the manufacturer's instructions.

8-13. Fuel Injectors (Bendix). Remove and clean the fuel inlet screen on strainer. Clean the strainer in unleaded gasoline or Varsol cleaning fluid.

8-14. Fuel Injector (Simmonds). Clean all exposed surfaces of the fuel pump and throttle body assemblies with a dry lint free cloth.

8-15. Injector Nozzles - (Simmonds). To clean nozzle orifices use a stream of dry compressed air. Do not use a probe of any kind to clean nozzle orifices.

8-16. Injector Nozzles - (Bendix). Remove the nozzle and submerge it in cleaning solvent (Stoddard Solvent, Methyl Ethyl Ketone or equivalent). Remove nozzle from solvent, and dry with clean, dry compressed air. Under normal conditions, the shield and screen are NOT removed from the nozzle assembly. However, if either the shield or screen are removed from the nozzle, both must be thoroughly cleaned prior to reassembly and the shield must have a tight fit on body when installed.

NOTE

At no time is it permissible to use a sharp tool such as a wire to clean out an air bleed nozzle.

INSPECTION

8-17. Inspect the sump according to the general instructions contained in Section 3.

8-18. Oil Suction Screen. Before cleaning the screen, inspect for evidence of metal particles, which could serve as an aid to locate deterioration in some section of the engine. Inspect screen for distortion or openings of the mesh.

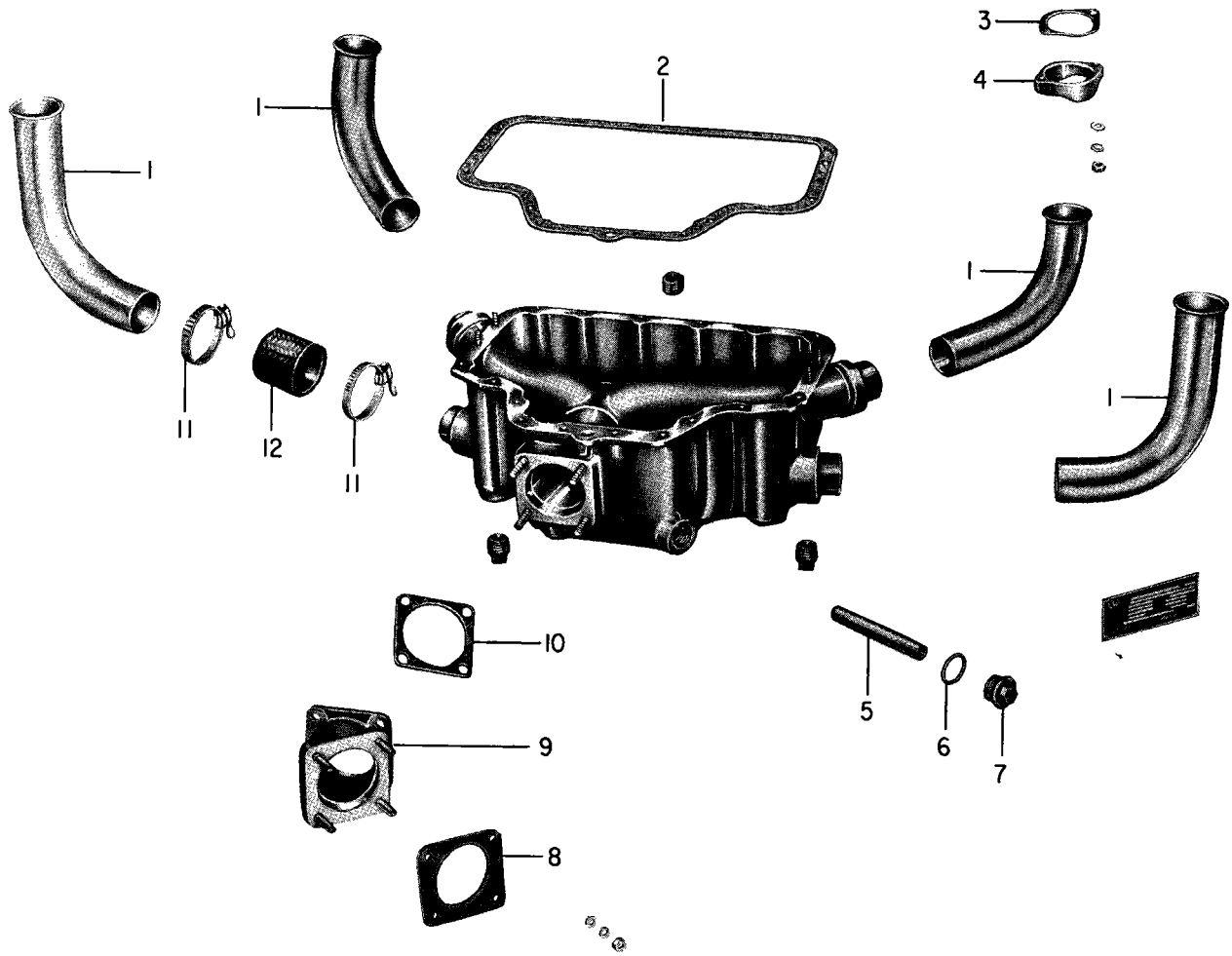

1. Intake Pipe
2. Gasket
3. Flange Gasket
4. Flange
5. Oil Suction Screen
6. Gasket
7. Plug
8. Gasket
9. Throttle Body Elbow
10. Gasket
11. Hose Clamps
12. Hose

Figure 8-1. Oil Sump and Related Parts Group

8-19. Carburetors. Inspection of carburetors must determine parts serviceablility and repair and replacement requirements. Check applicable manufacturer's publications for limits to be used when conducting inspection.

8-20. Bendix Fuel Injectors. The fuel metering section should be inspected along with its corresponding fuel lines and fittings for damage or fuel leakage. Check all fuel lines for deformation, restrictions and fuel leakage. Check throttle and mixture control rods for deformation.

8-21. Simmonds #530 Fuel Injectors - The following inspection procedures are applicable to Simmonds # 530 fuel injectors.

8-22. Pump Assembly - Inspect mounting surfaces and fastenings for security. Check for leakage, cracks or other damage to pump housing. Check pump fittings and lines connected to pump for cracks or other damage. Check mixture control lever for damage and wear. Inspect linkage connected to mixture control lever for damage and/or wear.

8-23. Throttle Body - Check all of the following parts for damage and/or wear. (a) Throttle lever and linkage. (b) Throttle body. (c) Accelerator pump linkage, levers and lines (d) Fuel manifold assembly, (e) All other fittings and lines.

8-24. Nozzle Assembly. Check nozzle lines for wear, damage or leakage. Inspect installed nozzles for security of mounting. Make sure fuel lines are connect-

ed securely to the nozzles. Check for clogged nozzles. Remove nozzles, if clogged, and conduct a priming operation to make certain fuel flows from the nozzle.

NOTE

Nozzles for this system are a matched set and are stamped "A", "B" or "C". Fuel flows for these nozzles are:

a. "A" - 280 to 284 cc per minute at 9.8 psi supply pressure.

b. "B" - 276 to 280 cc per minute at 9.8 psi supply pressure.

c. "C" - 272 to 276 cc per minute at 9.8 psi supply pressure.

Only matched nozzles must be used in each engine. If nozzles are mixed erratic engine operation and uneven fuel distribution will be experienced. Example: "A" nozzles may be required in one engine, and "B" or "C" nozzles in the other engine. Any combination may be used to match the needles, however, do not mix the nozzles in the same engine. The purpose of the three different rate nozzles is to provide adjustment of the fuel flows between engines to align fuel flow gage needles.

REPAIR AND REPLACEMENT

8-25. Intake Pipe Connection Removal. In the event that any of the intake pipe connections are loose or damaged, remove the defective connection by collapsing it with a chisel or punch.

8-26. Intake Pipe Connection - Installation. Place a new connection on the end of the swaging tool (64781) and tighten the screw until the rollers have expanded sufficiently to hold the connection on the tool. Insert the connection into the hole in the sump, making sure that the connection is fully inserted in the hole and seated on the machined shoulder provided. Begin to rotate the tool, stopping every couple of turns to expand the rollers by tightening the screw one or two full turns. When the groove in the connection is fully swaged in the groove in the sump, (this will be evidenced by the increased resistance of the screw) collapse the rollers and withdraw the swaging tool.

8-27. Repair of Intake Pipe Bores. Service Instruction No. 1168A describes in detail the procedures necessary to repair the intake pipe bores in the sump.

8-28. Carburetors - All repair and replacement procedures must be carried out in conjunction with the manufacturer's publications. Consult Avco Lycoming Service Bulletins nos. 297A, 306, 309 and 323 and be certain the carburetor has been modified to conform with these bulletins.

8-29. Fuel Injectors - All repair and replacement procedures must be carried out in conjunction with

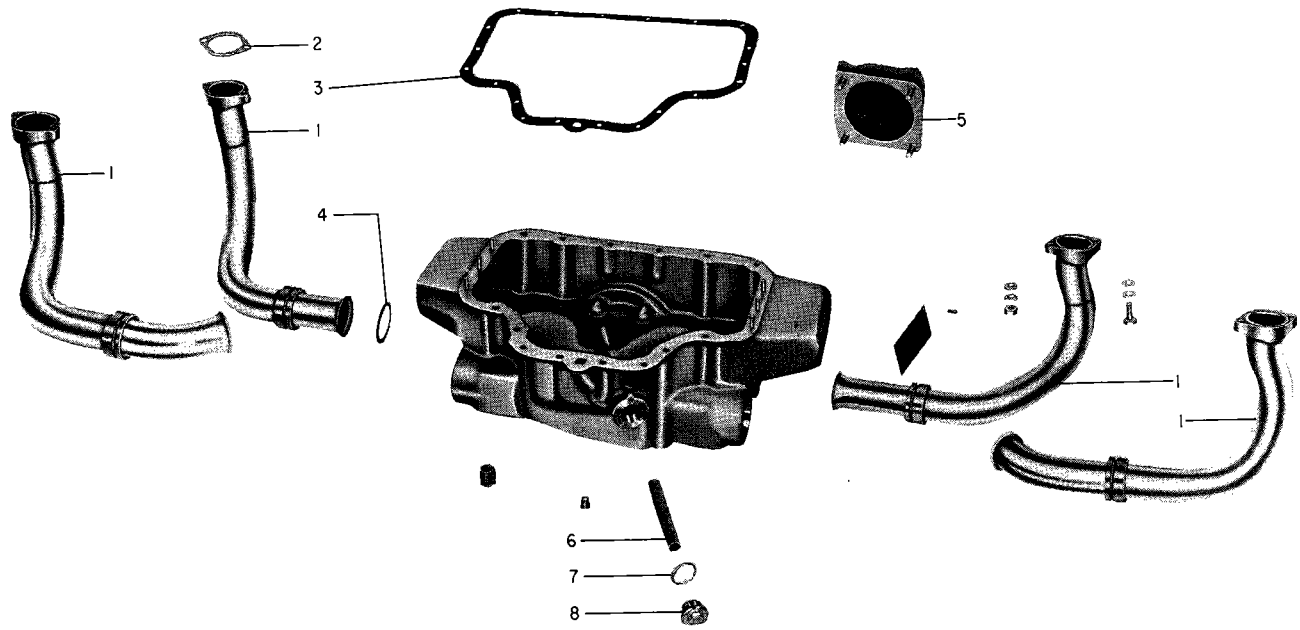

1. Intake Pipe
2. Flange Gasket
3. Gasket
4. "O" Ring Seal
5. Adapter
6. Oil Suction Screen
7. Gasket
8. Plug

Figure 8-2. Oil Sump and Related Parts Group

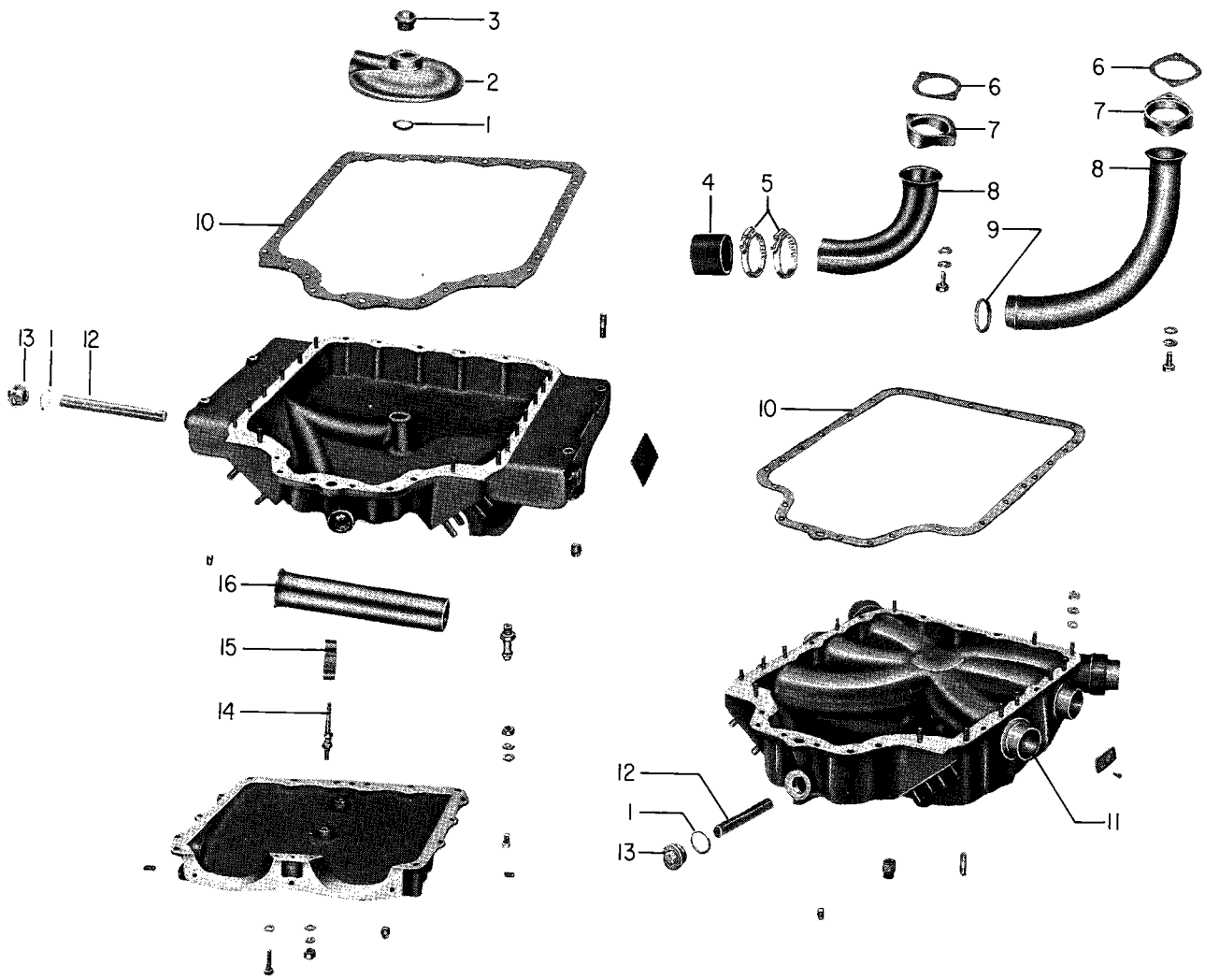

1. Annular Gaskets
2. Oil Sump Baffle
3. Plug, 7/8 - 14 x . 62
4. Hose
5. Hose Clamps
6. Flange Gaskets
7. Intake Pipe Flanges
8. Intake Pipes
9. "O" Ring
10. Gaskets
11. Intake Pipe Connection
12. Oil Suction Screen
13. Plug 1.00 - 20 x . 62
14. Intake Pipe Extension Studs
15. Intake Pipe Extension Clamps
16. Intake Pipe Extensions

Figure 8-3. Oil Sumps and Induction Housing (O-540)

the manufacturer's publications. Consult Avco Lycoming, Service Bulletins nos. 305B, 320, 321, 322A, 331, 335 and 342 and be certain the fuel injector and nozzle lines have been modified to conform with these bulletins.

REASSEMBLY

8-30. When engine build-up has progressed to the point where the crankcase and the accessory housing have been assembled and the cylinders installed, the sump may be assembled on the engine. Using a new gasket assemble the oil sump to the crankcase and accessory housing. Consult the applicable parts catalog for correct fastenings. Tighten all fastenings to proper torque.

8-31. Induction Housing (IO-540 and TIO-540 Where applicable). See figure 8-3. Assemble the intake pipe extensions (16) in the housing and secure with intake pipe extension clamps (15) and studs (14). Assemble the induction housing to the sump. When the induction housing is fastened to the sump it forms a housing for the air inlet housing. Install the air inlet housing.

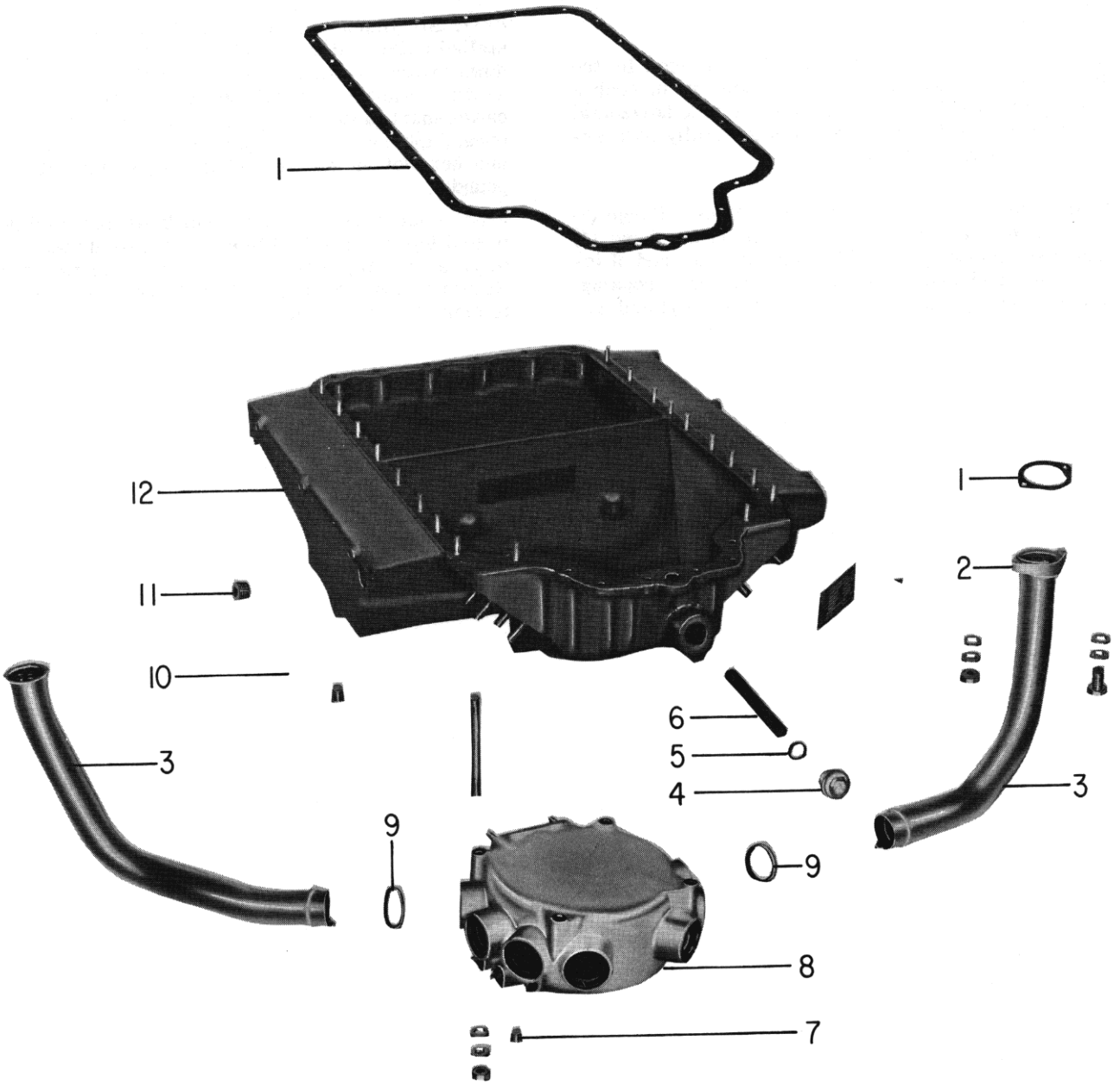

1. Gaskets
2. Intake Pipe Flange
3. Intake Pipes
4. 1 Inch Plug
5. Gasket
6. Oil Suction Screen
7. Helicoil
8. Induction Housing
9. Oil Seal
10. 1/2 Inch Plug
11. 3/4 Inch Plug
12. Oil Sump

Figure 8-4. Oil Sump and Induction System (IO-720)

8-32. Induction Housing (IO-720-A, -C). See figure 8-4. Assemble the induction housing (8) to the bottom of the sump.

8-33. Induction Housing (IO-720-B). Assemble the intake pipe extensions in the induction housing and secure with clamps and studs. Assemble the induction housing to the sump and the induction housing cover to the induction housing. Assemble the air inlet housing to the induction housing.

8-34. Carburetor or Fuel Injector - Using a new gasket, install the carburetor or fuel injector on its mounting pad. Note that the serial numbers of the pump assem-

bly and throttle body of the Simmons #530 fuel injector must be the same. These units are not interchangeable.

8-35. Flow Dividers. The flow divider used in the Bendix fuel injection system is mounted in such a fashion that its discharge nozzles are in a horizontal plane. The flow divider is mounted generally to a peripheral crankcase fastening.

8-36. Intake Pipes. See figure 8-3. Slide a flange (7) over each intake pipe (8). Assemble either hose (4) and hose clamps (5) or "O" rings (9) over end of intake pipe and install in sump or induction housing. Place a new gasket (6) over the intake port and secure the flange to the cylinder. Slide hose (4) over connection (11) and tighten clamps.

8-37. Air Bleed Nozzles. Air bleed nozzles are installed in the cylinder head. In upper side of head on down exhaust cylinders and lower side of head on up exhaust cylinders. Install nozzle so that the identification mark (letter or figure on .500 hex) is installed toward the bottom of the engine within approximately one hex flat of the tightening torque limit (60 inch pounds).

8-38. Fuel Lines. Assemble fuel lines from fuel pump to fuel injector and fuel injector to flow divider. Assemble fuel injector nozzle lines. Consult Service Bulletins nos. 335 and 342 for instructions relative to clamping the nozzle lines.

SECTION 9.
TEST PROCEDURE

9-1. At the completion of assembly of the engine after overhaul, it is recommended that the engine be mounted upon a test stand for its initial or run-in operation. The run-in serves a two-fold purpose; first, to seat piston rings and burnish any new parts that may have been installed and second, to give the operator control over the first critical hours of operation, during which time he can observe the functioning of the engine by means of the test cell instruments. Also, at this time any malfunction can be corrected and oil leaks repaired.

9-2. The test stand should be installed in a test cell that is clean and free of any articles that could be moved by the test club air blast.

9-3. The following instruments should be used, plus any additional instruments that may be deemed necessary by the operator. 0° to 600°F. temperature gage, counter tachometer, fuel flow meter, fuel pressure gage, manifold pressure gage, oil temperature gage, oil pressure gage and an oil flow measuring device.

NOTE

Avco Lycoming recommends that a test cell be used for run-in of engines after overhaul. Consult engine test equipment, SSP1169, for more detail list of cell equipment and schematic of oil supply system and fuel. In the event a test cell is not available, it is permissible to mount the engine in the airframe for the run-in providing the following requirements are observed.

1. The proper test club, not a flight propeller, is used.

2. A cooling shroud equivalent to a test cell cooling shroud is installed.

3. The airframe gages may not be used. All necessary calibrated gages shall be installed independent of the airframe.

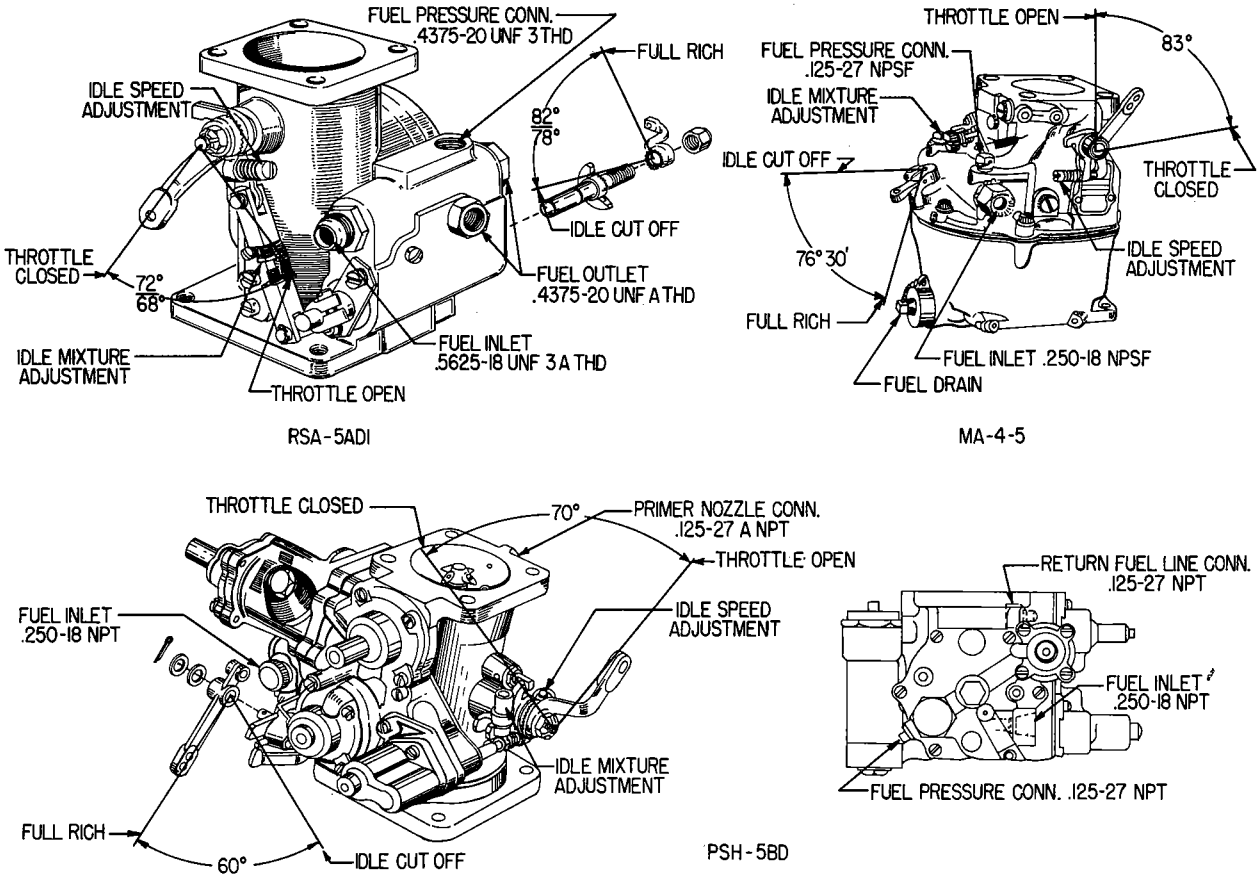

Figure 9-1. Fuel Metering Systems

TABLE 9-1

ENGINE RUN-IN TEST LIMITS

	Fuel Pressure psi - at inlet to carb. or injector	Fuel - Minimum Octane Rating Aviation Grade	Maximum Oil Consumption		Oil Press. Operating - psi		Oil Inlet Temp. °F.	Oil Outlet* Temp. °F.	Max. Cyl. Head Temp. Bayonet Location °F.	Full Throttle Engine Speed RPM
			Lbs./Hr.	Qt./Hr.	Normal	Idle				
O-235-C1, -C1B, -C2A -C2B, -E	2-5	80/87	0.9	.50	75-85	25	165-230	190-210	500	2800
O-235-F, -G, -J	2-5	100/130	0.9	.50	75-85	25	165-230	190-210	500	2800
O-235-C2C, -H2C	2-5	80/87	0.9	.50	75-85	25	165-230	190-210	500	2600
O-290-D, -D2	2-5	80/87	1.0	.56	75-85	25	165-230	190-210	500	2600
O-320-A, -E	2-5	80/87	1.2	.67	75-85	25	165-230	190-210	500	2700
O-320-B, -D	2-5	91/96	1.2	.67	75-85	25	165-230	190-210	500	2700
IO-320-A, -E	18-28	80/87	1.2	.67	75-85	25	165-230	190-210	500	2700
IO-320-B, -D	18-28	91/96	1.2	.67	75-85	25	165-230	190-210	500	2700
LIO-320-B	18-28	91/96	1.2	.67	75-85	25	165-230	190-210	500	2700
IO-320-C	18-28	100/130	1.2	.67	75-85	25	165-230	190-210	500	2700
LIO-320-C	18-28	100/130	1.2	.67	75-85	25	165-230	190-210	500	2700
AIO-320-A, -B, -C	18-28	91/96	1.2	.67	75-85	25	165-230	190-210	500	2700
O-340-A	2-5	91/96	1.3	.72	75-85	25	165-230	190-210	500	2700
O-360-A, -C(except-A1C, -C2B and -C2D	2-5	91/96	1.4	.78	75-85	25	165-230	190-210	500	2700
O-360-A1C, -C2B, -C2D	13-18	91/96	1.4	.78	75-85	25	165-230	190-210	500	2700
O-360-B, -D	2-5	80/87	1.4	.78	75-85	25	165-230	190-210	500	2700
IO-360-A, -C, -D	14-45	100/130	1.5	.83	75-85	25	165-230	190-210	500	2700
IO-360-B (except -B1A)	18-28	91/96	1.4	.78	75-85	25	165-230	190-210	500	2700
IO-360-B1A	-2-+2	91/96	1.4	.78	75-85	25	165-230	190-210	500	2700
IO-360-F	18-28	100/130	1.4	.78	75-85	25	165-230	190-210	500	2700
AIO-360	14-45	100/130	1.5	.83	75-85	25	165-230	190-210	500	2700
LIO-360-C	14-45	100/130	1.5	.83	75-85	25	165-230	190-210	500	2700
HO-360-A	2-5	91/96	1.4	.78	75-85	25	165-230	190-210	500	2700
HO-360-B	13-15	91/96	1.4	.78	75-85	25	165-230	190-210	500	2700
HIO-360-A, -C	14-45	100/130	1.5	.83	75-85	25	165-230	190-210	475	2900
HIO-360-B	14-45	91/96	1.5	.83	75-85	25	165-230	190-210	500	2900
HIO-360-D1A	14-45	100/130	1.5	.83	75-85	25	165-230	190-210	475	3200**
TIO-360-A	23-27	100/130	1.5	.83	70-80	25	165-230	190-210	475	2575
O-540-A, -D	2-5.5	91/96	1.8	1.0	75-85	25	165-230	190-210	500	2575
O-540-B	2-5.5	80/87	1.8	1.0	75-85	25	165-230	190-210	500	2575
O-540-E, -G, -H	2-5.5	91/96	1.4	.78	75-85	25	165-230	190-210	500	2700
IO-540-A, -B, -E, -G, -P	18-28	100/130	1.8	1.0	75-85	25	165-230	190-210	475	2575
IO-540-C, -J	18-28	91/96	1.8	1.0	75-85	25	165-230	190-210	500	2575
IO-540-D, -N, -R	18-28	91/96	1.4	.78	75-85	25	165-230	190-210	500	2700
IO-540-K, -L, -M, -S	18-28	100/130	1.8	1.0	75-85	25	165-230	190-210	475	2700
HIO-540-A	18-28	100/130	1.8	1.0	75-85	25	165-230	190-210	475	2575
TIO, LTIO-540-A	37-39	100/130	1.8	1.0	75-85	25	165-230	190-210	475	2575
TIO, LTIO-540-C, -E	37-39	100/130	1.8	1.0	75-75	25	165-230	190-210	500	2575
TIO, LTIO-540-J, -N, -F	37-39	100/130	1.8	1.0	75-85	25	165-230	190-210	475	2575
TIO, LTIO-540-H	37-39	100/130	1.8	1.0	75-85	25	165-230	190-210	500	2575
IO-720-A, -B, -C, -D	24-28	100/130	3.0	1.7	75-85	25	165-230	190-210	475	2650

* - Desired during oil consumption run.

** - Do not exceed 3150 RPM - for test stand at 24-25 inch Hg. manifold pressure. For oil consumption run, operate at 3100 RPM at 24 inch Hg. manifold pressure.

9-4. Test stand oil supply pressure to engines which can be run simulated wet sump shall be held to 1.5 - 2.0 psi throughout the run. Test stand oil supply pressure to engines run simulated dry sump shall be held to 0.5 - 3.0 psi at rated conditions. Personnel should consult Service Bulletin No. 113 when desiring to use dry sump test stand installation for wet sump engines.

9-5. Engines equipped with an integral full flow oil filter, should be run-in with a slave filter and the regular filter installed at the end of the run.

9-6. Turbocharged Engines. A slave filter should be installed between the oil supply hose and the turbocharger oil inlet. This slave filter should have a filtering capability of 100 microns or less and have a pressure relief valve set to 15 - 18 psi differential. This will assure that no metal particles are carried to the turbocharger lubrication system.

9-7. Any engine accessory drive, such as the propeller governor drive, which transmits oil pressure through oil passages in the engine and which is not pressurized by normal operation on the test stand shall be checked for leakage at normal oil pressure by means of a special drive cover with oil transfer holes as required. The oil passages involved shall be inspected for external leaks at the completion of the run.

9-8. It is desirable to have some method of maintaining the oil temperatures within the specified limits during the run-in. See Table 9-1. Engine should be idled until oil temperature is approximately 140° F. before starting the run-in schedule. See Table 9-2.

9-9. Operate during the run-in with (MIL-L-6082, Grade 1100) lubricating oil or if engine is to be stored with a mixture of 35% MIL-C-6529, type 1 and 65% MIL-L-6082.

9-10. Fuel shall conform to specifications. See Table 9-1.

9-11. Engines equipped with a fuel pump shall be tested with a test stand fuel system terminating in a float chamber vented to the atmosphere. The fuel level in this chamber shall be below the entrance to the fuel pump by at least one foot. The fuel pressure to the chamber shall be maintained at 2 to 5 psi.

9-12. Engines not equipped with a fuel pump shall be tested with either a remote or installed representative fuel pump.

9-13. PRESSURE CARBURETORS. New or reconditioned pressure carburetors must undergo a minimum of eight hours soaking before being placed in service. This can be accomplished before or after installation on the engine and is accomplished in the following manner. With the throttle lever wide open and the mixture control lever in "full rich" position, inject fuel into the fuel inlet connection until fuel flows from the fuel outlet. Close the throttle and move the mixture control to "idle cut-off".

9-14. Pre-Oiling 6 and 8 Cylinder Engines. After assembly of engine is complete, engines to be primed with the same lubricating oil as used in the engine by forcing 35 psi oil thru one main gallery until oil flows from the opposite gallery with the front end of the gallery open.

9-15. Attach the instrument connections and connect oil and fuel lines. Connect throttle and mixture control levers to the stand controls. Be sure the cables are free and not binding and that the travel is sufficiently long enough to completely open and close the throttle and to move the mixture control lever from full rich to idle cut-off. Install the applicable cooling shroud, test club and adapter. See Section 11. Be certain the test club will turn up rated RPM ± 50. See Table 9-1.

9-16. It is desirable to keep a log sheet and record the instrument readings during each speed of the run-in schedule. See Table 9-2.

9-17. Before starting be certain that the magneto switch is in the "off" position. Turn the engine over a few revolutions to ascertain that no interference exists within the arc of the test club or within the engine itself. If it does not turn freely, do not try to force it or attempt to start until the cause has been determined and the fault corrected.

9-18. RUN-IN. Start the engine in accordance with the following procedure.

a(1). Float type carburetor or Simmonds Injector - Place mixture control in "full rich" position.

a(2). Pressure Carburetor or Bendix Fuel Injector - Place mixture control in idle cut-off position.

b. Turn fuel valve to "on" position.

c. Set throttle at 1/10 open position.

d(1). Turn magneto switch to "left" and engage starter.

TABLE 9-2

RECOMMENDED RUN-IN SCHEDULE

RPM	LOAD	TIME (MINUTES)	REMARKS
1200	Prop. Load	10	
1500	Prop. Load	10	
1800	Prop. Load	10	Check magneto drop-off.
2000	Prop. Load	10	Do not exceed 125 RPM on either
2200	Prop. Load	10	magneto or 35 RPM between
2400	Prop. Load	10	magnetos.
Normal Rated*	Prop. Load	15	
Normal Rated*	Prop. Load	60	Oil Consumption Run.

* - See Table 9-1.

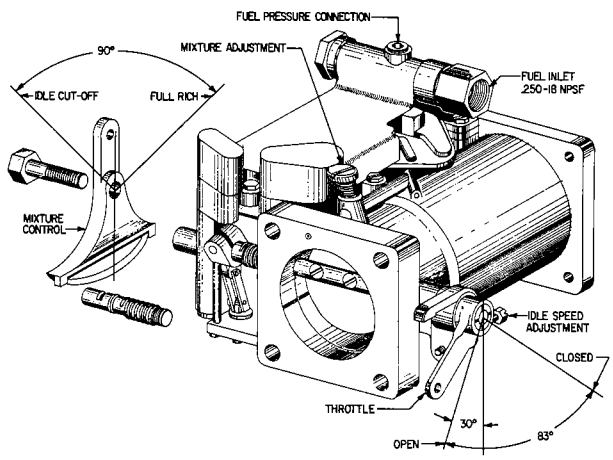

Figure 9-2. Carburetor - HA-6

d(2). Turn combination magneto-starter switch to "start".

e(1). When engine fires, move mixture control smoothly to "Full Rich" on pressure carburetor or Bendix fuel injectors.

e(2). Leave float type carburetors and Simmonds injectors in "full rich".

f(1). Move magneto switch to "both".

f(2). Combination spring loaded switches will return to "both".

CAUTION

If oil pressure is not indicated within ten seconds, stop engine and determine cause.

9-19. Operate engine at approximately 1000 RPM until a minimum oil in temperature of 140° F. is obtained. Check magneto drop-off and general operation of the engine. Check the engine for oil leaks. Any malfunction or oil leak should be remedied before continuing the run.

9-20. Complete the run in accordance with the schedule listed in Table 9-2.

9-21. OIL CONSUMPTION RUN. An oil consumption run should be made at the end of the run-in schedule. Oil consumption can be determined by the use of a scale tank through which the oil lines pass and the scale reading taken at the beginning and end of the oil consumption run. Or it can be determined by draining and weighing the oil supply before and after the oil consumption run. Oil temperature should be held as closely as possible to the limits shown in Table 9-1. Oil consumption should not exceed the maximum as listed in Table 9-1.

9-22. OIL PRESSURE RELIEF VALVE. Subject engines may be equipped with either an adjustable or a non-adjustable relief valve. A brief description, of both types, follows.

9-23. Non-adjustable Oil Pressure Relief Valve - Although the valve is not adjustable, the oil pressure can be controlled by the addition of STD-425 washers under the cap as required (maximum of three) to increase pressure or the use of a spacer (P/N 73629 or 73630) to decrease pressure. A later modification to the relief valve eliminates the need of the spacer and uses STD-425 washers as required (maximum of nine). Particles of metal or other foreign matter between the ball and the seat can cause the oil pressure to drop or fluctuate. Therefore, if a drop or excessive fluctuation is noted it is advisable to disassemble, inspect and clean the valve.

9-24. Adjustable Oil Relief Valve - The adjustable oil pressure relief valve enables the operator to maintain engine oil pressure within the specified limits (see Table 9-1). The oil pressure can be adjusted by turning the adjusting screw in to increase pressure or out to decrease pressure. The adjusting screw can be turned with either a screw driver or a socket wrench.

9-25. IDLE SPEED AND MIXTURE ADJUSTMENT - (Except Simmonds Fuel Injector). See figures 9-1 and 9-2. With engine thoroughly warmed up, check magneto drop-off. If the drop-off is excessive, check for fouled plugs. If drop-off is normal, proceed with idle adjustment. Close the throttle, engine should idle at approximately 600 RPM (turbocharged engines, approximately 1000 RPM). If the RPM increases appreciably after a change in the idle mixture adjustment during the succeeding steps, readjust the idle speed adjustment to restore the desired RPM.

9-26. Move the mixture control lever with a smooth, steady pull into the idle-cut-off position and observe the tachometer for any change during the leaning process. Caution must be exercised to return the mixture control lever to "full rich" before the RPM can drop to a point where the engine cuts out. An increase of more than 50 RPM while "leaning out" indicates an excessively rich mixture. An immediate decrease in RPM (if not preceded by a momentary increase) indicates the mixture is too lean.

9-27. If it is indicated that the mixture is either too lean or too rich, turn the idle mixture adjustment one or two notches in the direction required for correction. Check this setting by repeating the above procedure. Each time the adjustment is changed, the engine should be run up to 2000 RPM to clear the engine before proceeding with the idle speed check. The final adjustment of the idle speed should be made with throttle closed.

9-28. IDLE SPEED AND MIXTURE ADJUSTMENT - (Simmonds Injector). See figure 9-3. Three adjustments can be made for proper engine idling conditions. All three are made on the throttle body assembly.

1. Throttle Lever Stop Adjustment - This adjustment changes idle speed and mixture simultaneously. If engine idles too slowly turn adjustment screw clockwise until satisfactory idle is obtained.

2. Idle Air Bleed Adjustment. If a satisfactory idle is not obtained by the first adjustment proceed as follows.

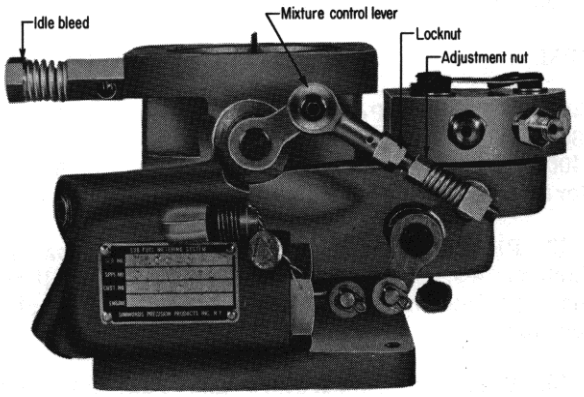

Right Side View

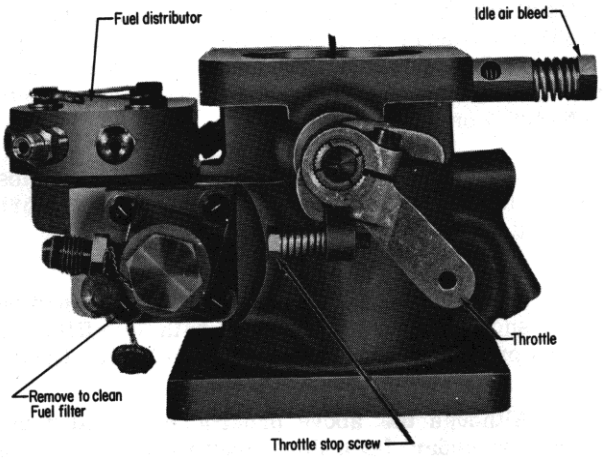

Left Side View

Figure 9-3. Simmonds Type 530 Fuel Injector Throttle Body

a. Move the mixture control lever toward the idle cut-off position with a smooth, steady pull and note tachometer. An increase of more than 10 RPM indicates an excessively rich mixture while an immediate decrease (if not preceded by a momentary increase) indicates the mixture is too lean. If mixture is too rich, turn idle air bleed adjustment screw counter-clockwise, if the mixture is too lean turn the idle air bleed adjustment screw clockwise. Make adjustments until a check results in a pick-up of five (never more than 10 RPM). Each time an adjustment is made the engine should be run up to 2000 RPM to clear the engine before the check is made. If idle speed is affected by this change turn throttle lever stop adjustment in the direction required to obtain proper idle speed.

3. Mixture Control Lever Linkage. If proper idle cannot be obtained by the first two steps proceed as follows.

CAUTION

This is a sensitive adjustment, factory pre-set and normally not requiring adjustment. If, however, adjustment is necessary the nut should be moved only 1/6 (one-sixth) of a turn at a time.

a. First unloosen locknut. If mixture is too rich as determined in step 2, turn adjustment nut 1/6 of a turn counter-clockwise. Lock with locknut and check mixture. Repeat 1/6 turn adjustments until a check results in a pick up of five (never more than 10 RPM).

b. If idle mixture is too lean, unloosen locknut and turn adjustment nut clockwise 1/6 of a turn. Lock with locknut and check mixture. Repeat 1/6 turn adjustments until proper idle mixture is obtained.

c. If the preceding adjustments change the idle speed, turn throttle lever stop adjustment in the required direction until proper idle speed is obtained.

9-29. PRESERVATION AND STORAGE. In the event the engine is to be stored at the completion of the run-in the engine should be preserved in the following manner.

9-30. Upon completion of the run-in, drain the oil. Refill the engine with a 1 to 1 mixture of MIL-L-6529, Type 1, and Bayol "D" or equivalent.

9-31. Remove top spark plugs, and with the crankcase full of oil, slowly turn the propeller through two (2) revolutions. Let engine stand for ten (10) minutes after which the propeller should be turned back and forth through 90° for twelve (12) cycles. Drain the preservative oil.

9-32. Spray the exhaust port and valve of each cylinder with the piston approximately 1/4 turn before top center of the exhaust stroke using MIL-C-6529 oil, Type 1.

9-33. Spray each cylinder with an airless spray gun (Spraying Systems Company "Gunjet" model 24A-8395 or equivalent) through the spark plug holes with MIL-C-6529 oil, Type 1. Spray approximately two (2) ounces of oil into each cylinder.

9-34. For all spraying the spray nozzle temperature shall be maintained between 200°F. and 220°F.

NOTE

In the event an airless spray gun is not available, it is recommended that a moisture trap be installed in the air line of a conventional spray gun and the oil shall be 200°F. to 220°F. at the nozzle.

9-35. Seal the breather openings with oil and moisture resistant caps or dehydrator plug, P/N 40238 or AN4062-11.

9-36. All accessory drives for which oil seals are provided shall be liberally coated with MIL-C-6529 oil, Type 1, before applying the drive covers.

9-37. Engines shall have spark plugs installed in the bottom cylinder location and dehydrator plugs, P/N 40238 installed in the upper cylinder location. The ignition harness shall be attached to the spark plugs in the bottom locations and have ignition cable protectors (AN-4060) on the top locations.

9-38. Exhaust ports and other openings should be closed with suitable covers. The turbine outlet on turbocharged engines should be covered.

9-39. All exposed cadmium plated and machined surfaces should be liberally coated with soft-film, corrosion preventive compound, MIL-C-16173, Grade 2.

9-40. Although the above procedure should prevent corrosion under favorable conditions it is recommended that the engine be periodically inspected for evidence of corrosion. If corrosion should be present, the affected part should be cleaned and the engine represerved. Also, engines preserved by the above procedures are not adequately protected for extended periods of storage. If at the end of 60 days it is found that the engine must remain in storage it must be represerved.

9-41. REPRESERVATION RUN - The represervation run should be accomplished under the same conditions as the run-in after overhaul except that only the following time schedule must be followed.

TABLE 9-3

RECOMMENDED REPRESERVATION SCHEDULE

RPM	LOAD	TIME (MINUTES)
1200	Prop. Load	5
1800	Prop. Load	5
2400	Prop. Load	5
Normal Rated	See Table 9-1	15

9-42. PRESERVATION AND STORAGE - Float Type Carburetors. Carburetor shall be emptied of all residual gasoline and the throttle locked in the closed position.

9-43. Pressure Carburetors and Fuel Injectors - Carburetors and fuel injectors shall be emptied of all residual fuel and flushed with oil, MIL-O-6081, Grade 1010. Injectors will have approximately one (1) ounce poured into inlet under gravity head. The injector will be rocked to cover all interior surfaces. Injectors with fluoro-silicone diaphragms and seals (no cure date) do not require flushing. Carburetors shall have the oil supplied to the inlet port at a pressure of from 5 to 8 psi. Mixture controls shall be at full rich during the flushing operation. Under no circumstances shall the regulator air chambers, air passages, or automatic mixture control be flushed with oil; these must be kept dry at all times. Drain excess oil and install plugs or caps. Lock the throttle in the closed position.

SECTION 10
TABLE OF LIMITS

This section of the manual has been reserved for the Special Service Publication No. SSP-1776 Part I, Table of Limits and Tightening Torque Recommendations.

Upon receipt of the owner's registration card, attached in the front of this manual, at Textron Lycoming, a copy of the Special Service Publication SSP-1776 Part I will be forwarded to the registered owner.

The SSP-1776 Part I should then be inserted in the manual at this location.

Revised November, 1990

TEXTRON Lycoming

SERVICE TABLE OF LIMITS AND TORQUE VALUE RECOMMENDATIONS

DIRECT DRIVE

NOTICE

The basic Table of Limits, SSP2070 (including SSP2070-1, SSP2070-2, SSP2070-3 and SSP2070-3A) has been completely revised and reissued herewith as SSP1776. It is now made up of the following four parts, each part contains five sections.

PART I	DIRECT DRIVE ENGINES (Including VO and IVO-360)
PART II	INTEGRAL ACCESSORY DRIVE ENGINES
PART III	GEARED ENGINES
PART IV	VERTICAL ENGINES (Excluding VO and IVO-360)

SECTION I	500 SERIES	CRANKCASE, CRANKSHAFT & CAMSHAFT
SECTION II	600 SERIES	CYLINDERS
SECTION III	700 SERIES	GEAR TRAIN
SECTION IV	800 SERIES	BACKLASH (GEAR TRAIN)
SECTION V	900 SERIES	TORQUE AND SPRINGS

This publication supersedes and replaces the previous publications SSP2070, SSP2070-1, SSP2070-2, SSP2070-3 and SSP2070-3A; it is not to be used in conjunction with them. To make sure that SSP1776 will receive the attention of maintenance personnel, a complete set of pages for the book is sent to all registered owners of Overhaul Manuals. These recipients should remove all previous Table of Limits material from the Overhaul Manual and discard.

Additional copies of this revised Table of Limits, bound in a plastic cover, are available as indicated in the latest edition of Service Letter No. L114.

Reference numbers in the Table of Limits vary from previous Table of Limits therefore, the current as well as the old numbers are listed. The shaded columns contain the old reference numbers.

* - Indicates cut-off date for data retrieved prior to publication.

TECHNICAL PUBLICATION REVISION

REVISION NO.	PUBLICATION	PUBLICATION NO.	PUBLICATION DATE
SSP-1776-B	**Service Table of Limits**	**SSP-1776**	**APRIL 1979**

This page(s) furnished herewith are intended to replace the corresponding pages(s) of the publication indicated above.

PREVIOUS REVISIONS	CURRENT REVISION
October 2010 1-35, 1-37	**January 2011** 1-37, 1-38, Adds Page 1-38A

©2011 by Avco Corporation. All Rights Reserved
Lycoming Engines is a division of Avco Corporation.

INTRODUCTION
SERVICE TABLE OF LIMITS

This Table of Limits is provided to serve as a guide to all service and maintenance personnel engaged in the repair and overhaul of Textron Lycoming Aircraft Engines. Much of the material herein contained is subject to revision; therefore, if any doubt exists regarding a specific limit or the incorporation of limits shown, an inquiry should be addressed to the Textron Lycoming factory for clarification.

DEFINITIONS:

Ref. (1st column)	The numbers in the first column headed "Ref." are shown as a reference number to locate the area described in the "Nomenclature" column. This number will be found in a diagram at the end of each section indicating a typical section where the limit is applicable.
Ref. (2nd column)	Indicates the old reference number. There are no diagrams in this manual for these numbers. These numbers are only to be found in previous publications.
Chart (3rd column)	The letter or letter and number in this column are used as symbols to designate engine models to which the specific limits is applicable. A list of the letter or letter and number and the engine to which they refer is shown below.
Nomenclature (4th column)	This is a brief description of the parts or fits specified in the adjacent columns and indicated in the diagram at end of each section.
Dimensions (5th & 6th columns)	The dimensions shown in column 5 are the minimum and maximum dimensions for the part as manufactured. The dimensions shown in column 6 indicate the limit that must not be exceeded. Unless it can be restored to serviceable size, any part that exceeds this dimension must not be rebuilt into an engine.
Clearance (7th & 8th columns)	Like the dimensions shown in the 5th and 6th columns, the clearance represents the fit between the two mating surfaces as controlled during manufacture and as a limit for permissible wear. Clearances may sometimes be found to disagree with limits for mating parts; for example, maximum diameter of cylinder minus minimum diameter of piston exceeds limit for piston and barrel clearance. In such instances, the specified maximum clearance must not be exceeded.

In some instances, where a parts revision has caused a dimensional or tolerance change, the superseded dimenional data has been deleted from the list; provided compliance with the change is not mandatory.

Letters of the alphabet and numbers are used as symbols throughout the Table of Limits to represent specific interpretations and to designate engine models. Letters in parenthesis refer to dimensional characteristics; letters (or combinations of letters and numbers) without parenthesis indicate engine models. They are listed below with their separate definitions.

(A)	These fits are either shrink fits controlled by machining, fits that may readily be adjusted, or fits where wear does not normally occur. In each case, the fit must be held to manufacturing tolerance.
(B)	Side clearance on piston rings must be measured with face of ring flush with piston .
(D)	The dimensions shown are measured at the bottom of the piston skirt at right angles to the piston pin.
(E)	Permissible wear of the crankshaft (rod and main bearing journals) to be minus 0.0015 on the diameter.
(L)	Loose fit; wherein a definite clearance is mentioned between the mating surfaces.
(T)	Tight fit; shrink or interference fit.
(WD)	Wide Deck Crankcase.

Introduction

The illustrations shown are typical of the referenced limit or fit described in the Table and in no instance are these illustrations intended to represent a specific part or engine model unless specified. Also, the terms used to designate cylinder, piston and ring materials such as "nitride, chrome, half-wedge" are more fully explained in the latest edition of Service Instruction No. 1037.

PART I DIRECT DRIVE ENGINES (Including VO and IVO-360)

CHART	MODELS
A	0-235
A1	0-235-F, -G, -K, -L
B	0-290
B1	0-290-D2
D	0-435-A
BD	0-320-H (76 Series)
G	O, IO, LIO, AEIO-320
G1	O, IO-320 With Gov. at Front (0-320-E1F, -E1J, -D1F & IO-320-D1B)
G2	AIO-320
J	0-340
Y	VO, IVO-360
S	O, IO, LIO, HIO, LHIO, TO, TIO, AEIO-360
S1	TO-360
S2	AIO-360
S3	TIO-360
S4	0-360-A With Gov. at Front (0-360-A1H, -A1LD)
S5	IO, LIO-360-A, -C (Angle Valve)
S6	IO, LIO-360-A, -C With Gov. at Front (IO, LIO-360-C1E6 & IO-360-A1D6)
S7	HIO-360-D
S8	HIO-360-B
S9	HIO-360-C, -E
S10	HIO-360-A
T	O, IO, LIO, AEIO, TIO, LTIO-540
T1	0-540-G, -H & IO-540-N, -R (Large Mains - Parallel Valve)
T2	IO-540-A, -B, -E, -G, -P (Angle Valve)
T3	IO-540-K, -M, -S; TIO, LTIO-540-A, -F, -J, -N, -R (Large Mains - Angle Valve)
T4	TIO-540-C, -E, -G, -H
AF	IO-720
BE	O, LO-360-E (76 Series)

NOTE: In "Chart" column, a number appearing after a letter shows exception to the basic model.

SERVICE TABLE OF LIMITS

PART 1 DIRECT DRIVE ENGINES

SECTION I CRANKCASE, CRANKSHAFT, CAMSHAFT

Ref. New	Ref. Old	Chart	Nomenclature	Dimensions Mfr. Min. & Max.	Dimensions Serv. Max.	Clearances Mfr. Min. & Max.	Clearances Serv. Max.
500	501	A	All Main Bearings and Crankshaft			.0025L / .0055L	.0060L
		B-D-G-J-S-T-Y-BD-BE-AF	Main Bearings and Crankshaft (Thin Wall Bearing - .09 Wall Approx.)			.0015L / .0045L	.0060L
		B-G-J-S-T-Y-AF	Main Bearings and Crankshaft (Thick Wall Bearing - .16 Wall Approx.)			.0011L / .0041L	.0050L
		A	Diameter of Main Bearing Journal on Crankshaft	2.3735 / 2.375	(E)		
		B-D-G-J-S-T-Y-BD-BE	Diameter of Main Bearing Journal on Crankshaft (2-3/8 in. Main)	2.3745 / 2.376	(E)		
		T1-T3-AF	Diameter of Main Bearing Journal on Crankshaft (2-5/8 in. Main)	2.6245 / 2.626	(E)		
		S8-S10	Diameter of Front Main Bearing on Journal on Crankshaft (2-3/8 in. Main)	2.3750 / 2.3760	(E)		
		T1-T3-AF	Diameter of Front Main Bearing Journal on Crankshaft (2-5/8 in. Main)	2.6245 / 2.6255	(E)		
500	955	A-B-B1-D-G*-BD-BE	Crankcase Bearing Bore Diameter (All) (Thin Wall Bearing) (2-3/8 in. Main)	2.566 / 2.567	2.5685		
		G**-J-S-T-Y	Crankcase Bearing Bore Diameter (All Except Front) (Thick Wall Bearing) (2-3/8 in. Main)	2.6865 / 2.6875	2.6890		
		T1-T3-AF	Crankcase Bearing Bore Diameter (Front Only) (Thin Wall Bearing) (2-5/8 in. Main)	2.816 / 2.817	2.8185		
		T1-T3-AF	Crankcase Bearing Bore Diameters (All Except Front) (Thick Wall Bearing) (2-5/8 in. Main)	2.9365 / 2.9375	2.9390		
		S1-T-AF	Crankcase Bearing Bore Diameter (All) (Thin Wall Bearing) (2-5/8 in. Main)	2.816 / 2.817	2.8185		
		G**-J-S-T-Y * 0-320-A, -E Narrow Deck. ** 0-320-A, -E Wide Deck.	Crankcase Bearing Bore Diameter (Front Only) (Thin Wall Bearing) (2-3/8 in. Main)	2.566 / 2.567	2.5685		
501	502	ALL	Connecting Rod Bearing and Crankshaft			.0008L / .0038L	.0050L
		A-B-D-G-J-S-T-Y-BD	Diameter of Connecting Rod Journal on Crankshaft (2-1/8 in.)	2.1235 / 2.125	(E)		

SECTION I Direct Drive

SERVICE TABLE OF LIMITS

PART 1 DIRECT DRIVE ENGINES

SECTION I CRANKCASE, CRANKSHAFT, CAMSHAFT

Ref. New	Ref. Old	Chart	Nomenclature	Dimensions Mfr. Min. & Max.	Dimensions Serv. Max.	Clearances Mfr. Min. & Max.	Clearances Serv. Max.
501	502	S-T-AF	Diameter of Connecting Rod Journal on Crankshaft (2-1/4 in.)	2.2485 / 2.250	(E)		
	954	A-B-D-G-J-S-T-Y-BD-BE	Connecting Rod Bearing Bore Diameter (2-1/8 in.) (Measured At Axis 30° on Each Side)	2.2870 / 2.2875			
		S-T-AF	Connecting Rod Bearing Bore Diameter (2-1/4 in.) (Measured At Axis 30° on Each Side)	2.4205 / 2.4210			
502	564	ALL	Connecting Rod - Side Clearance			.004L / .010L	.016L
503	566	ALL	Connecting Rod - Alignment			.010 in 10 Inches	
504	567	ALL	Connecting Rod - Twist			.012 in 10 Inches	
505	556		Crankshaft Run-Out at Center Main Bearing				
		4 CYLINDER	Mounted on No. 1 and 4 Journals Max. Run-Out No. 2 Journal			.002	.002
			Mounted on No. 1 and 4 Journals Max. Run-Out No. 3 Journal			.005	.0075
			Mounted on No. 2 and 4 Journals Max. Run-Out No. 3 Journal			.003	.0045
		6 CYLINDER	Mounted on No. 2 and 5 Journals Max. Run-Out No. 1 Journal			.002	.002
			Mounted on No. 2 and 5 Journals Max. Run-Out No. 3 Journal			.005	.0075
			Mounted on No. 2 and 4 Journals Max. Run-Out No. 3 Journal			.003	.0045
			Mounted on No. 3 and 5 Journals Max. Run-Out No. 4 Journal			.003	.0045
		8 CYLINDER	Mounted on No. 2 and 6 Journals Max. Run-Out No. 1 Journal			.002	.002
			Mounted on No. 2 and 4 Journals Max. Run-Out No. 3 Journal			.003	.0045
			Mounted on No. 3 and 5 Journals Max. Run-Out No. 4 Journal			.003	.0045
			Mounted on No. 4 and 6 Journals Max. Run-Out No. 5 Journal			.003	.0045
			Mounted on No. 2 and 6 Journals Max. Run-Out No. 3,4 and 5 Journals			.005	.0075
506	568	ALL	Crankshaft and Crankcase Front End Clearance			.009L / .016L	.026L
507	938	ALL	Clearance - Front Face of Crankshaft Oil Slinger to Front Face of Recess in Crankcase (Crankshaft Against Thrust Face)			.002 / .007L	(A)

SERVICE TABLE OF LIMITS

PART 1 DIRECT DRIVE ENGINES

SECTION I CRANKCASE, CRANKSHAFT, CAMSHAFT

Ref. New	Ref. Old	Chart	Nomenclature	Dimensions Mfr. Min. & Max.	Dimensions Serv. Max.	Clearances Mfr. Min. & Max.	Clearances Serv. Max.
508	607	ALL	Crankshaft Prop. Flange Run-Out			.002	.005
509	941	ALL	Starter Ring Gear and Support			.014T / .022T	(A)
510	504	A-B-D-G-J-S-T-Y-AF BD-BE	Crankshaft Timing Gear and Crankshaft			.0005T / .0010L	(A)
511	536	A-B-D-G-J-S-T-Y-AF	Tappet Body and Crankcase			.0010L / .0033L	.004L
		BD-BE	Tappet Body and Crankcase			.0010L / .0030L	.004L
		A-B	O.D. of Tappet	.6232 / .6240	.6229		
		B1-D-G-J-S-T-Y-AF	O.D. of Tappet	.7169 / .7177	.7166		
		BD-BE	O.D. of Tappet	.8740 / .8745	.8737		
		A-B	I.D. Tappet Bore in Crankcase	.6250 / .6263	.6266		
		B1-D-G-J-S-T-Y-AF	I.D. Tappet Bore in Crankcase	.7187 / .7200	.7203		
		BD-BE	I.D. Tappet Bore in Crankcase	.8755 / .8773	.8776		
512	559	B1-D-G-J-S-T-Y	Tappet Plunger Assembly and Body - Chilled			.0010L / .0047L	.0067L
		S7-S1-AF	Tappet Plunger Assembly and Body - Hyperbolic			.0010L / .0067L	.0087L
513	560	B1-D-G-J-S-T-Y	Tappet Socket and Body			.002L / .005L	.007L
		S7-S1-AF	Tappet Socket and Body (Hyperbolic)			.002L / .007L	.009L
514	537	ALL	Camshaft and Crankcase			.002L / .004L	.006L
515	538	ALL	Camshaft - End Clearance			.002L / .009L	.015L
516	539	ALL	Camshaft Run-Out at Center Bearing Journal			.000 / .001	.006
517	578	All Models Using Counterweights	Counterweight Bushing and Crankshaft			.0013T / .0026T	(A)
518	579	All Models Using Counterweights	Counterweight Roller - End Clearance			.007L / .025L	.038L
519	580	All Models Using Counterweights	Counterweight and Crankshaft - Side Clearance*			.003L / .013L	.017L
520	696	All Models Using Counterweights	Counterweight Bore and Washer O.D.			.0002L / .0030L	(A)
521	775	All Models Using Counterweights	I.D. of Counterweight Bushing	.7485 / .7505	.7512		
		* Measure below roller next to flat.					

SERVICE TABLE OF LIMITS

PART 1 DIRECT DRIVE ENGINES

SECTION I CRANKCASE, CRANKSHAFT, CAMSHAFT

Ref. New	Ref. Old	Chart	Nomenclature	Dimensions		Clearances	
				Mfr. Min. & Max.	Serv. Max.	Mfr. Min. & Max.	Serv. Max.
522	774	ALL (AS APPLICABLE)	O.D. of Counterweight Roller (See latest edition of Service Instruction No. 1012)				
523	503	D	Thrust Bearing and Propeller Shaft			.0000 / .0012L	.002L
524	509	D	Thrust Bearing and Thrust Bearing Cap Clamp Fit (Shim to this Fit)			.003T / .005T	(A)
525	555	D	Thrust Bearing Tilt		.027 Tilt		
526	505	D	Crankshaft Run-Out - Rear Cone Location				.003
527	506	D	Crankshaft Run-Out - Front Cone Location				.007
528	508	D	Thrust Bearing and Thrust Bearing Cage			.0016L / .0034L	.0045L

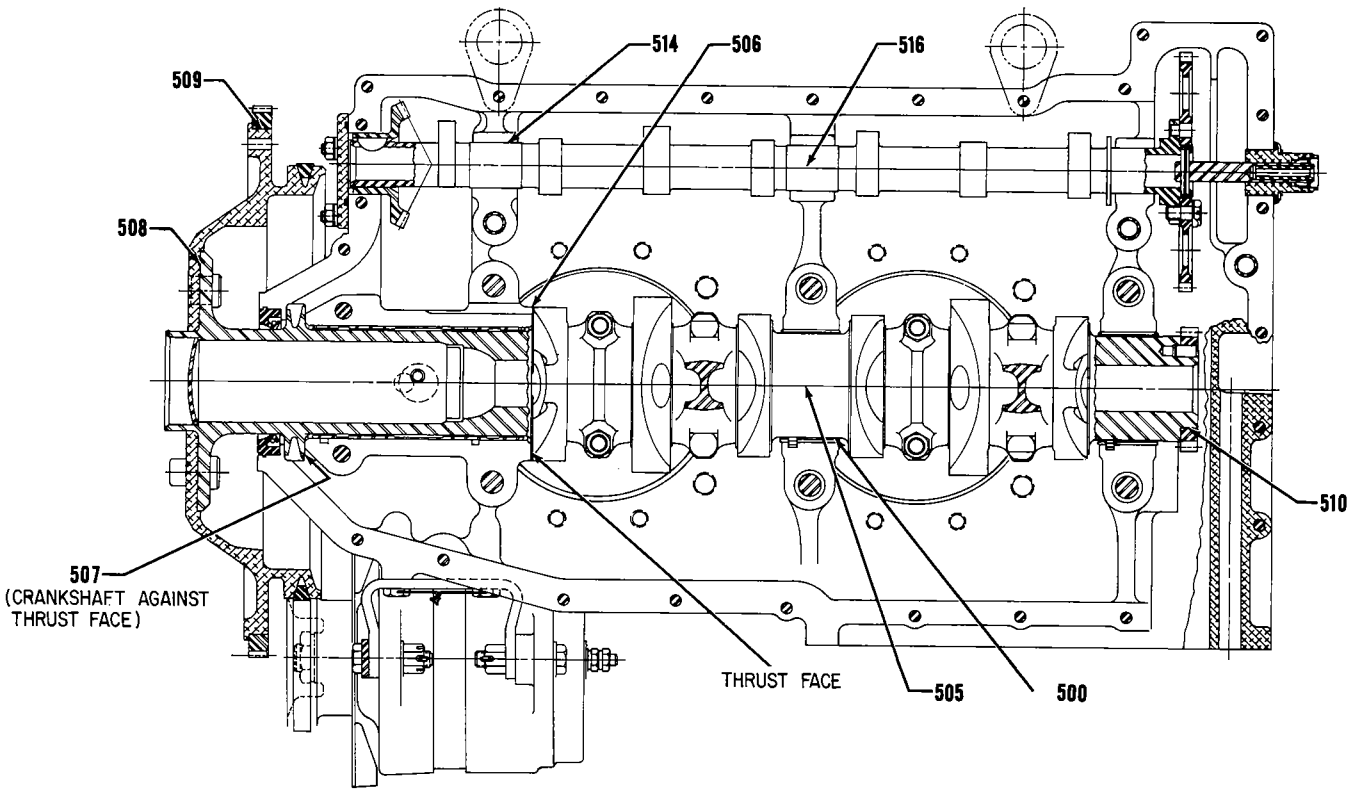

Longitudinal Section Thru Engine

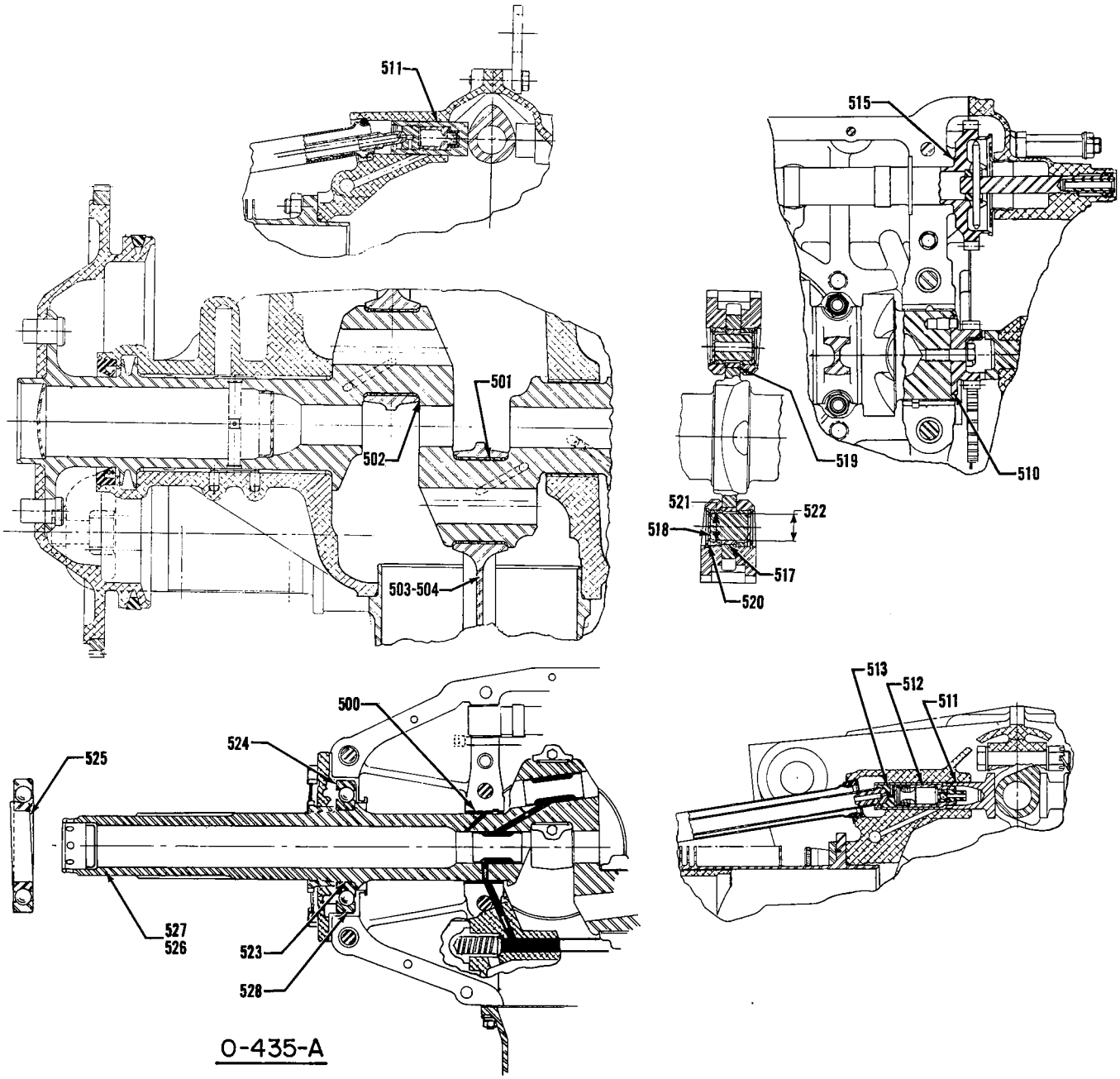

Crankcase, Crankshaft, Camshaft and Related Parts

SERVICE TABLE OF LIMITS

PART 1 DIRECT DRIVE ENGINES

SECTION II CYLINDERS

Ref. New	Ref. Old	Chart	Nomenclature	Dimensions Mfr. Min. & Max.	Dimensions Serv. Max.	Clearances Mfr. Min. & Max.	Clearances Serv. Max.
600	510	ALL	Connecting Rod and Connecting Rod Bushing	Bushing To Be Burnished in Place			
		ALL	Finished I.D. of Connecting Rod Bushing	1.1254 / 1.1262			
601	510	A-B-D-G-J-BD	Length Between Connecting Rod Bearing Centers	6.4985 / 6.5015			
		S-T-Y-AF-BE	Length Between Connecting Rod Bearing Centers	6.7485 / 6.7515			
602	511	ALL	Connecting Rod Bushing and Piston Pin			.0008L / .0021L	.0025L
603	512	ALL	Piston Pin and Piston			.0003L / .0014L	.0018L
		ALL	Diameter of Piston Pin Hole in Piston	1.1249 / 1.1254			
		ALL	Diameter of Piston Pin	1.1241 / 1.1246			
604	513	A-G-J-S-T-AF-BD-BE	Piston and Piston Pin Plug			.0002L / .0010L	.002L
		A-G-J-S-T-AF-BD-BE	*Diameter of Piston Pin Plug	1.1242 / 1.1247			
605	513	B-D-G-J-S-T-Y-AF	Piston Pin and Piston Pin Plug (Optional)			.0005L / .0025L	.005L
		G-J-S-T-Y-AF	*Diameter of Piston Pin Plug	.5655 / .5665			
		B-D	Diameter of Piston Pin Plug (Thin Wall Pin)	.8405 / .8415			
		*See latest edition of Service Instruction No. 1267.					
606	514	A-B	Piston Ring and Piston - Side Clearance (Top Ring Comp.) (Plain) Full Wedge			.000 / .004L	.006L(B)
		B-D	Piston Ring and Piston - Side Clearance (Top Ring Comp.) (Chrome) Full Wedge			.0025L / .0065L	.008L(B)
		G-J-S-T-Y-AF-BD-BE	Piston Ring and Piston - Side Clearance (Top Ring Comp.) Half Wedge			.0025L / .0055L	.008L(B)
606	515	B	Piston Ring and Piston - Side Clearance (2nd Ring Comp.) (Chrome) Full Wedge			.0025L / .0065L	.008L(B)
		A-B-D-G-J-S-T-Y-AF-BD-BE	Piston Ring and Piston - Side Clearance (2nd Ring Comp.) Full or Half Wedge			.000 / .004L	.006L(B)
		J	Piston Ring and Piston - Side Clearance (3rd Ring Comp.) Half Wedge			.000 / .004L	.006L(B)
606	516	ALL	Piston Ring and Piston - Side Clearance (Oil Regulating)			.002L / .004L	.006L(B)

SERVICE TABLE OF LIMITS

PART 1 DIRECT DRIVE ENGINES

SECTION II CYLINDERS

Ref. New	Ref. Old	Chart	Nomenclature	Dimensions Mfr. Min. & Max.	Dimensions Serv. Max.	Clearances Mfr. Min. & Max.	Clearances Serv. Max.
606	517	A	Piston Ring and Piston - Side Clearance (Bottom)			.003L / .0055L	.007L(B)
607	615	ALL	Piston Ring Gap (Compression) Plain and Chrome Cylinders (Straight Barrels)			.020 / .030	.047
		ALL	Piston Ring Gap (Compression) Nitrided and Chrome Cylinders (Choke Barrels)			.045 / .055	.067
		ALL	Piston Ring Gap (Oil Regulating) (All Barrels)			.015 / .030	.047
		A-T2	Piston Ring Gap (Oil Scraper) (All Barrels)			.015 / .030	.047

For Choke Barrels - Ring gap is measured within 4 inches from bottom. Ring gap at top of travel must not be less than .0075.

For all Other Barrels - Ring gap is measured at top limit of ring travel.

		Engine and Piston Application		Min. Piston Diameter			Cylinder Barrel		
		Engine Chart Code Letter	Piston Number	Top	Bottom	Type of Piston	Type of Surface	Maximum Diameter	Max. Clearance Piston Skirt & Cyl.
608	519	A	61147, 73851	4.3470	4.3555	Cast-Round	P	4.3795	.021L
608	522		61333	4.3470	4.3555	Forged-Round	P	4.3795	.021L
609	520		LW-11621*, LW-13623*	4.3290	4.3605	Cast-Cam	N	4.3805	.018L
610	521	B	69841*, 69958, 70396	4.8290	4.8620	Cast-Cam	P - C	4.8805	.018L
		D	69958	4.8290	4.8620	Cast-Cam	P	4.8805	.018L
		G,S,T	73196, 74059, 75413	5.0790	5.1090	Cast-Cam	P-C-N	5.1305	.018L
		G	69337	5.0790	5.1090	Forged-Cam	P - C	5.1305	.018L
		J,S,Y,T	71594*, 72967*, 74530*, 75089*	5.0790	5.1090	Cast-Cam	P-C-N	5.1305	.018L
		B D	LW-15357*	5.0790	5.1090	Cast-Cam	N	5.1305	.018L
		S,T,AF	73264*, 75617*, 76966, 78203*, LW-10207*, LW-13358*, LW-14610*, LW-11487*, LW-10545	5.0790	5.1090	Forged-Cam	N - C	5.1305	.018L
		T	LW-13396*	5.0790	5.1090	Cast-Cam	N	5.1305	.018L

NOTES:

To find the average diameter of cylinder in an area 4" above bottom of barrel: First, measure diameter at right angles from plane in which valves are located. Second, measure diameter through the plane in which valves are located. Add both diameters; this sum, divided by 2, represents the average diameter of the cylinder.

*=High Compression.

Cylinder Barrel: P=plain steel, N=nitride hardened, C=chrome plated.

To find the average out-of-round, measure diameter of cylinder in an area 4" above bottom of barrel: First, measure diameter at right angles from plane in which valves are located. Second, measure diameter through the plane in which valves are located. Difference between diameters must not exceed .0045 inch.

Maximum taper and out-of-round permitted for cylinder in service is .0045 inch.

See Service Instruction No. 1243 for identification of cast and forged pistons. The suffix "S" that will be found with the part number on 76966, 78203, LW-10207, LW-10545, LW-11487, LW-13358, LW-14610 pistons indicates the piston weight is within the limits specified for any group of pistons and may be substituted for any like piston on a particular engine. Other pistons are manufactured within weight limits that do not require any weight controlled piston for replacement.

Piston diameter at top is measured at top ring land (between top and second compression ring grooves) at right angle to piston pin hole; diameter at bottom of piston is measured at the bottom of the piston skirt at right angles to the piston pin. See Service Instruction No. 1243 for illustration.

SERVICE TABLE OF LIMITS

PART 1 DIRECT DRIVE ENGINES

SECTION II CYLINDERS

Ref. New	Ref. Old	Chart	Nomenclature	Dimensions Mfr. Min. & Max.	Dimensions Serv. Max.	Clearances Mfr. Min. & Max.	Clearances Serv. Max.
611	523	A	Exhaust Valve Seat and Cylinder Head			.0065T / .010T	(A)
		B-D-G-J-S-T-Y-BD-BE	Exhaust Valve Seat and Cylinder Head			.0045T / .008T	(A)
		S1-S2-S3-S5-S6-S7-S9-S10-T2-T3-AF	Exhaust Valve Seat and Cylinder Head			.0075T / .011T	(A)
		A	O.D. Exhaust Seat	2.0025 / 2.004			
		B-D-G-J-S-T-Y-BD-BE	O.D. Exhaust Seat	1.7395 / 1.741			
		S1-S2-S3-S5-S6-S7-S9-S10-T2-T3-AF	O.D. Exhaust Seat	1.9355 / 1.937			
		A	I.D. Exhaust Seat Hole in Cylinder Head	1.994 / 1.996			
		B-D-G-J-S-T-Y-BD-BE	I.D. Exhaust Seat Hole in Cylinder Head	1.733 / 1.735			
611	523	S1-S2-S3-S5-S6-S7-S9-S10-T2-T3-AF	Exhaust Seat Hole in Cylinder Head	1.926 / 1.928			
612	524	A	Intake Valve Seat and Cylinder Head			.0070T / .0105T	(A)
		B-D-G-J-S-T-Y-AF-BD-BE	Intake Valve Seat and Cylinder Head			.0065T / .010T	(A)
		A	O.D. Intake Seat	2.0965 / 2.0975			
		A1-B-D	O.D. Intake Seat	1.9265 / 1.928			
		B1-C-J-S-T-Y-BD-BE	O.D. Intake Seat	2.0815 / 2.083			
		S1-S2-S3-S5-S6-S7-S9-S10-T2-T3-AF	O.D. Intake Seat	2.2885 / 2.290			
		A	I.D. Intake Seat Hole in Cylinder Head	2.087 / 2.089			
		A1-B-D	I.D. Intake Seat Hole in Cylinder Head	1.918 / 1.920			
		B1-G-J-S-T-Y-BD-BE	I.D. Intake Seat Hole in Cylinder Head	2.073 / 2.075			
		S1-S2-S3-S5-S6-S7-S9-S10-T2-T3-AF	I.D. Intake Seat Hole in Cylinder Head	2.280 / 2.282			
613	526	ALL	Exhaust Valve Guide and Cylinder Head			.001T / .0025T	(A)
613	527	A-B-D-G-J	O.D. Exhaust Valve Guide	.5933 / .5938			

SERVICE TABLE OF LIMITS

PART 1 DIRECT DRIVE ENGINES

SECTION II CYLINDERS

Ref. New	Ref. Old	Chart	Nomenclature	Dimensions Mfr. Min. & Max.	Dimensions Serv. Max.	Clearances Mfr. Min. & Max.	Clearances Serv. Max.
613	527	Y	O.D. Exhaust Valve Guide	.6267/.6272			
		G-J-S-T-AF-BD-BE	O.D. Exhaust Valve Guide	.6633/.6638			
		S1	O.D. Exhaust Valve Guide	.6953/.6958			
		A-B-D-J	I.D. Exhaust Valve Guide Hole in Cylinder Head	.5913/.5923			
613	527	Y	I.D. Exhaust Valve Guide Hole in Cylinder Head	.6247/.6257			
		G-J-S-T-AF-BD	I.D. Exhaust Valve Guide Hole in Cylinder Head	.6613/.6623			
		S1	I.D. Exhaust Valve Guide Hole in Cylinder Head	.6933/.6943			
614	527	ALL	Intake Valve Guide and Cylinder Head			.0010T/.0025T	
		ALL	O.D. Intake Valve Guide	.5933/.5938			
		ALL	I.D. Intake Valve Guide Hole in Cylinder Head	.5913/.5923			
615	528	A-B-D	Exhaust Valve Stem and Valve Guide			.0020L/.0038L	(A)
		A1-G-J-S-T-BD-BE	Exhaust Valve Stem and Valve Guide (Parallel Valve Heads)			.0040L/.0060L	(A)
		Y	Exhaust Valve Stem and Valve Guide			.0035L/.0053L	(A)
		S1-S2-S3-S5-S6-T2-T3-AF	Exhaust Valve Stem and Valve Guide (Angle Valve Heads)			.0037L/.0050L	(A)
		S7-S9-S10	Exhaust Valve Stem and Valve Guide (Angle Valve Heads - Helicopter)			.0035L/.0055L	(A)
		A-B-D	O.D. Exhaust Valve Stem	.4012/.4020			
		A1	O.D. Exhaust Valve Stem	.4320/.4333			
		G-J-Y	O.D. Exhaust Valve Stem	.4332/.4340			
		G-J-S-T-BD-BE	O.D. Exhaust Valve Stem (Parallel Valve Heads)	.4935/.4945	.4915		
		S1-S2-S3-S5-S6-S7-S9-S10-T2-T3-AF	O.D. Exhaust Valve Stem (Angle Valve Heads)	.4955/.4965	.4937		

Service allowable limits of .4937 or .4915 is applicable only to inconel or nimonic valves.

SERVICE TABLE OF LIMITS

PART 1 DIRECT DRIVE ENGINES

SECTION II CYLINDERS

Ref. New	Ref. Old	Chart	Nomenclature	Dimensions Mfr. Min. & Max.	Dimensions Serv. Max.	Clearances Mfr. Min. & Max.	Clearances Serv. Max.
615	527	A-B-D	Finished I.D. Exhaust Valve Guide	.4040 / .4050			
		A1-G-J	Finished I.D. Exhaust Valve Guide	.4370 / .4380			
		Y	Finished I.D. Exhaust Valve Guide	.4375 / .4385			
		G-J-S-T-BD-BE	Finished I.D. Exhaust Valve Guide (Parallel Valve Heads)	.4985 / .4995			
		S1-S2-S3-S5-S6-T2-T3-AF	Finished I.D. Exhaust Valve Guide (Angle Valve Heads)	.4995 / .5005			
		S7-S9-S10	Finished I.D. Exhaust Valve Guide (Angle Valve Heads - Helicopter)	.5000 / .5010			
		1/2 inch diameter exhaust valves may have exhaust valve guides that are .003 in. over the maximum inside diameter limit, anytime up to 300 hours of service. After 300 hours of service, inside diameter of exhaust valve guide may increase .001 in. during each 100 hours of operation up to the recommended overhaul time for the engine, or not to exceed .015 inch over the basic I.D. See latest edition of Service Instruction No. 1009 for recommended overhaul time.					
616	529	ALL	Intake Valve Stem and Valve Guide			.0010L / .0028L	.006L
		ALL	O.D. Intake Valve Stem	.4022 / .4030	.4010		
616	527	ALL	Finished I.D. Intake Valve Guide	.4040 / .4050			
617	951	ALL	Intake and Exhaust Valve and Valve Cap Clearance (Rotator Type Small Dia. Head)			.000 / .004L	.005L
618	952	A-B	Solid Tappet Clearance (After Engine in Run)			.006 / .012	
		G-D-J-S-T-Y-AF-BD-BE	Dry Tappet Clearance			.028 / .080	
619	530	A	Valve Rocker Shaft and Cylinder Head (No Bushing)			.0001L / .0013L	.0025L
619	611	B-D-J-S-T-Y	Valve Rocker Shaft and Valve Rocker Bushing (Parallel Valve Heads)			.0001L / .0013L	.0025L
		S1-S2-S3-S5-S6-S7-S9-S10-T2-T3-AF	Valve Rocker Shaft and Valve Rocker Bushing (Angle Valve Heads)			.0001L / .0013L	.0025L
619	530	A	Finished I.D. of Valve Rocker Shaft Bores in Cylinder Head (No Bushings)	.6246 / .6261	.6270		
619	611	B-D-G-J-S-T-Y	Finished I.D. of Valve Rocker Shaft (Bushing) in Cylinder Head (Parallel Valve Heads)	.6246 / .6261	.6270		

SERVICE TABLE OF LIMITS

PART 1 DIRECT DRIVE ENGINES

SECTION II CYLINDERS

Ref. New	Ref. Old	Chart	Nomenclature	Dimensions Mfr. Min. & Max.	Dimensions Serv. Max.	Clearances Mfr. Min. & Max.	Clearances Serv. Max.
619	611	S1-S2-S3-S5-S6-S7-S9-S10-T2-T3-AF	Finished I.D. of Valve Rocker Shaft (Bushing) in Cylinder Head (Angle Valve Heads)	.6246 / .6261	.6270		
620	531	ALL	Valve Rocker Shaft and Valve Rocker Bushing			.0007L / .0017L	.004L
		ALL	Finished I.D. of Rocker Arm Bushing	.6252 / .6263	.6270		
		ALL	O.D. Valve Rocker Shaft	.6241 / .6245	.6231		
621	532	ALL	Valve Rocker Bushing and Valve Rocker	Bushing Must Be Burnished In Place			
622	612	ALL	Valve Rocker Shaft Bushing and Cylinder Head			.0022T / .0038T	(A)
		ALL	Valve Rocker Shaft Bushing Hole in Cylinder Head	.7380 / .7388			
623	533	A-B-D-G-J-Y-S-T	Valve Rocker and Cylinder Head - Side Clearance (Parallel Valve Heads)			.005L / .013L	.016L
		S1-S2-S3-S5-S6-S7-S9-S10-T2-T3-AF	Valve Rocker and Cylinder Head - Side Clearance (Angle Valve Heads)			.002L / .020L	.024L
624	535	A-B-J	Push Rod and Ball End			.0005T / .0025T	(A)
625	971	A	Intake and Exhaust Valve Guide Height	.705 / .725			
		ALL	Intake Valve Guide Height (Parallel Valve Heads)	.705 / .725			
		ALL EXCEPT 0-235	Exhaust Valve Guide Height (Parallel Valve Heads)	.765 / .785			
		ALL	Intake and Exhaust Valve Guide Height (Angle Valve Heads)	.914 / .954			
			MEASURE VALVE GUIDE HEIGHT FROM THE VALVE SPRING SEAT COUNTERBORE IN THE CYLINDER HEAD TO THE TOP OF VALVE GUIDE.				

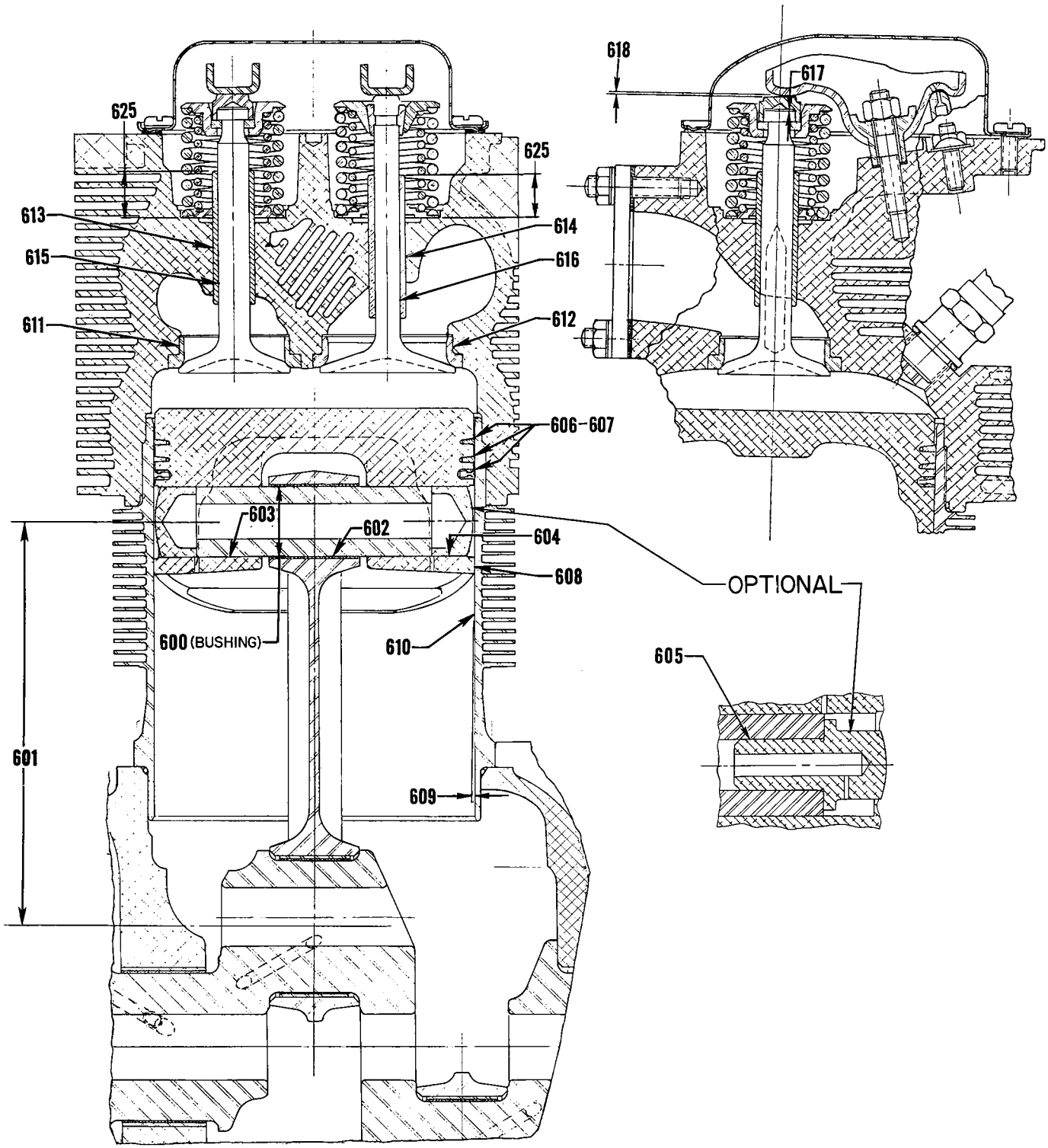

Cylinder, Piston and Valve Components

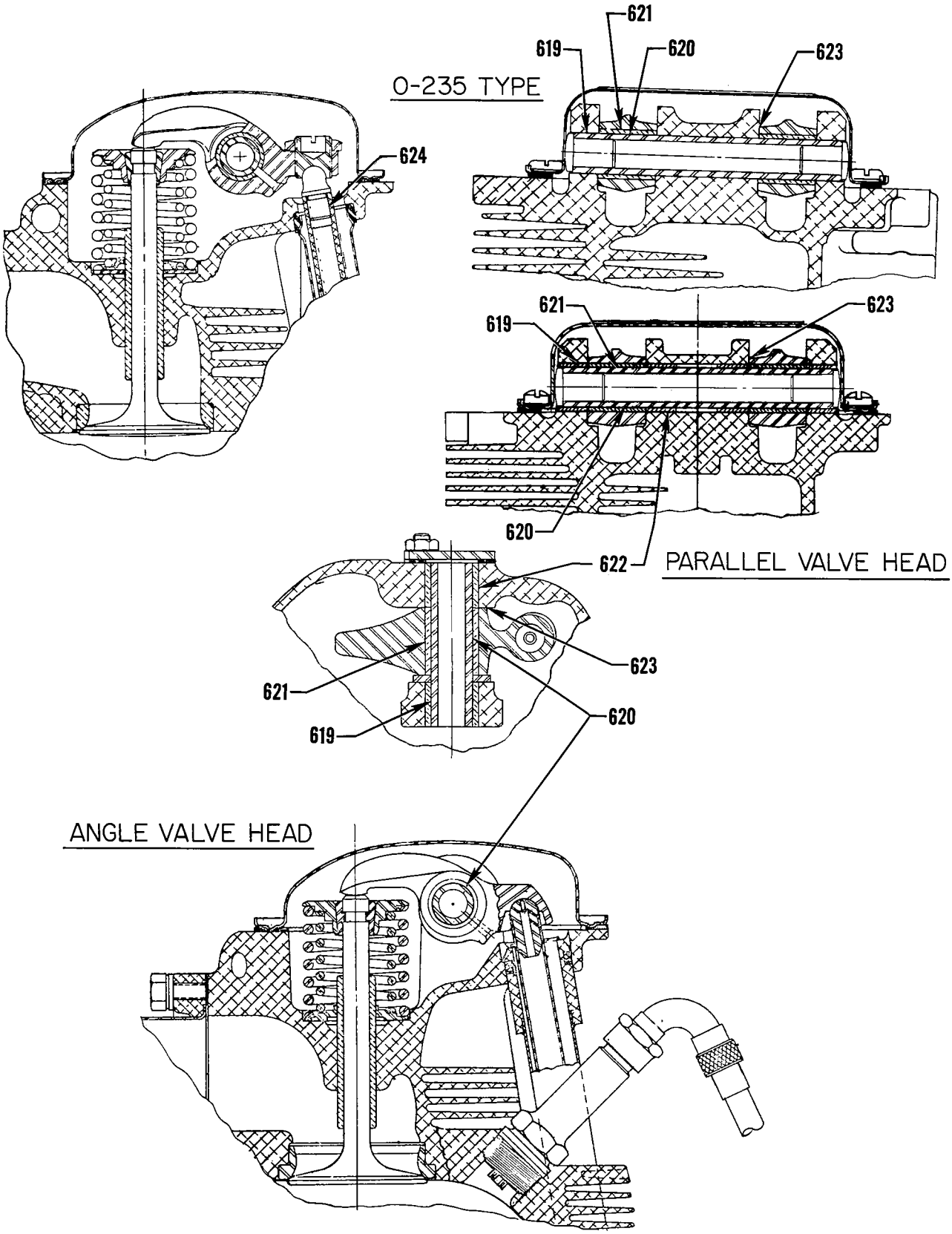

Cylinder, Piston and Valve Components

SERVICE TABLE OF LIMITS

PART 1 DIRECT DRIVE ENGINES

SECTION III GEAR TRAIN SECTION - OIL PUMP

Ref. New	Ref. Old	Chart	Nomenclature	Dimensions Mfr. Min. & Max.	Dimensions Serv. Max.	Clearances Mfr. Min. & Max.	Clearances Serv. Max.
700	545	ALL	Oil Pump Drive Shaft and Oil Pump Body or Cover			.0010L / .0025L	.004L
701	601	A-B-D-G-J-S-T-AF	Oil Pump Drive Shaft and and Accessory Housing			.0015L / .0030L	.006L
		Y	Oil Pump Drive Shaft and Accessory Case			.0015L / .0030L	.006L
		BD-BE	Oil Pump Drive Shaft and Crankcase			.0010L / .0025L	.004L
702	980	S-T-AF (DUAL MAGNETO)	Oil Pump Drive Shaft - End Clearance			.015L / .050L	.065L
		BD-BE	Oil Pump Drive Shaft - End Clearance			.017L / .037L	.047L
703	542	A-B-D-G-J-S-T-Y-AF	Oil Pump Impellers - Diameter Clearance			.002L / .006L	.008L
		BD-BE	Oil Pump Impellers - Diameter Clearance			.0035L / .0075L	.009L
704	543	ALL (Except BD-BE)	Oil Pump Impeller - Side Clearance			.002L / .0045L	.005L
		BD-BE	Oil Pump Impeller - Side Clearance			.003L / .005L	.006L
		AS APPLICABLE	Width of Oil Pump Impellers	.622 / .624	.621		
		AS APPLICABLE	Width of Oil Pump Impellers	.747 / .749	.746		
		AS APPLICABLE	Width of Oil Pump Impellers	.995 / .997	.994		
		BD-BE	Width of Oil Pump Impellers	.622 / .623	.620		
705	544	S-T-AF (DUAL MAGNETO)	Oil Pump Impeller and Idler Shaft			.0010L / .0025L	.004L
		A-B-D-G-J-S-T-Y-AF	Oil Pump Impeller and Idler Shaft			.001T / .003T	(A)
		BD-BE	Oil Pump Impeller and Idler Shaft			.002T / .004T	(A)
706	558	A-B-D-G-J-S-T-Y-AF	Oil Pump Idler Shaft and Oil Pump Body			.0005L / .0020L	.003L
		BD-BE	Oil Pump Idler Shaft and Oil Pump Body			.0010L / .0025L	.003L
		S-T-AF (DUAL MAGNETO)	Oil Pump Idler Shaft and Oil Pump Body			.0000 / .0015T	(A)
707	602	A-B-D-G-J-S-T-Y-AF	Oil Pump Idler Shaft and Accessory Housing			.0010L / .0025L	.0035L
		BD-BE	Oil Pump Idler Shaft and Crankcase			.0010L / .0025L	.0035L

SERVICE TABLE OF LIMITS

PART 1 DIRECT DRIVE ENGINES

SECTION III GEAR TRAIN SECTION - SCAVENGE PUMP

Ref. New	Ref. Old	Chart	Nomenclature	Dimensions Mfr. Min. & Max.	Dimensions Serv. Max.	Clearances Mfr. Min. & Max.	Clearances Serv. Max.
708	545	G2-S2	Scavenge Pump Drive Shaft and Adapter			.0010L / .0025L	.004L
709	546	G2-S2	Scavenge Pump - End Clearance			.000 / .045L	.060L
710	542	G2-S2	Scavenge Pump Impellers - Diameter Clearance			.007L / .011L	.014L
711	543	G2-S2	Scavenge Pump Impellers - Side Clearance			.003L / .005L	.006L
		G2-S2	Width of Impellers	1.496 / 1.498	1.495		
712	544	G2-S2	Scavenge Pump Impellers and Idler Shaft			.0010L / .0025L	.004L
713	544	G2-S2	Scavenge Pump Body and Idler Shaft			.0000 / .0015T	(A)
714	772	S3-T4-AF (WIDE DECK)	Turbocharger Scavenge Pump Drive and Adapter			.0010L / .0025L	.004L
715	986	S3-T4-AF (WIDE DECK)	Turbocharger Scavenge Pump Shaft and Adapter			.0010L / .0020L	.0035L
716	949	S3-T4-AF (WIDE DECK)	Gerotor Pump - Rotor - Side Clearance			.0015L / .003L	.004L
717	950	S3-T4-AF (WIDE DECK)	Gerotor Pump Housing and Adapter			.0005L / .0020L	(A)
718	985	S3-T4-AF (WIDE DECK)	Turbocharger Scavenge Pump - End Clearance			.0055L / .0365L	.0415L
		T4 (DUAL MAGNETO)	Turbocharger Scavenge Pump - End Clearance			.0105L / .0395L	.0445L
		SECTION III GEAR TRAIN SECTION - FUEL PUMP					
719	629	A-B-D-G-J-S-T	AC Fuel Pump Plunger and Accessory Housing			.0015L / .003L	.005L
720	619	J-S-T-AF	Crankshaft Idler Gear and Crankshaft Idler Gear Shaft			.001L / .003L	.005L
721	983	S-T-AF (DUAL MAGNETO)	Crankshaft Idler Gear Shaft and Accessory Housing			.0020L / .0035L	.0065L
		S-T-AF (DUAL MAGNETO)	Crankshaft Idler Gear Shaft and Crankcase			.0020L / .0035L	.0065L
722	767	S-T-AF	AN Fuel Pump Idler Gear and Shaft			.001L / .003L	.005L
723	984	S-T-AF (DUAL MAGNETO)	AN Fuel Pump Idler Gear Shaft and Accessory Housing and Crankcase			.0020L / .0035L	.0065L
		S-T-AF (DUAL MAGNETO)	AN Fuel Pump Idler Shaft and Crankcase			.0020L / .0035L	.0065L

Ref. New	Ref. Old	Chart	Nomenclature	Dimensions Mfr. Min. & Max.	Dimensions Serv. Max.	Clearances Mfr. Min. & Max.	Clearances Serv. Max.
724	620	A-B	Crankshaft Idler Gear - End Clearance			.003L / .043L	.058L
		G-J-S-Y	Crankshaft Idler Gear - End Clearance			.005L / .040L	.055L
		T-AF	Crankshaft Idler Gear - End Clearance			.007L / .037L	.052L
		S (DUAL MAGNETO)	Crankshaft Idler Gear - End Clearance			.020L / .030L	.040L
		T (DUAL MAGNETO)	Crankshaft Idler Gear - End Clearance			.015L / .038L	.046L
725	768	S	AN Fuel Pump Idler Gear - End Clearance			.010L / .045L	.055L
		T-AF	AN Fuel Pump Idler Gear - End Clearance			.002L / .018L	.024L
		S-T-AF (DUAL MAGNETO)	AN Fuel Pump Idler Gear - End Clearance			.015L / .038L	.045L
726	769	S-T-AF-Y	AN Fuel Pump Drive Shaft Gear and Adapter			.0010L / .0025L	.004L
727	770	S	AN Fuel Pump Drive Shaft Gear - End Clearance			.035L / .069L	.079L
		T-AF	AN Fuel Pump Drive Shaft Gear - End Clearance			.044L / .081L	.091L
		T-AF (DUAL MAGNETO)	AN Fuel Pump Drive Shaft Gear - End Clearance			.035L / .073L	.083L
		Y	AN Fuel Pump Drive Shaft Gear - End Clearance			.000L / .067L	.075L
		SECTION III GEAR TRAIN SECTION - GOVERNOR & HYDRAULIC PUMP					
728	668	T-AF (NARROW DECK)	Front Governor Drive Idler Shaft (Both Ends) and Crankcase			.0010L / .0025L	.004L
729	668	G1-G2-S2-S4-S6-T-AF (WIDE DECK)	Front Governor Idler Gear and Shaft			.0010L / .0025L	.004L
730	668	BD-BE	Front Governor Drive Gear and Crankcase			.0010L / .0025L	.004L
		BD-BE	Front Governor Drive Gear and and Camshaft			.0005L / .0025L	.004L
731	670	G1-G2-S-T-AF	Front Governor Gear and Crankcase			.0010L / .0025L	.004L
		BD	Front Governor Gear and Crankcase			.0010L / .0030L	.004L
732	674	G1-G2-S-T-AF	Front Governor Gear - End Clearance			.008L / .016L	.021L
		BD-BE	Front Governor Gear - End Clearance			.0045L / .0165L	.021L

SECTION III GEAR TRAIN SECTION - GOVERNOR & HYDRAULIC PUMP (CONT.)

Ref. New	Ref. Old	Chart	Nomenclature	Dimensions Mfr. Min. & Max.	Dimensions Serv. Max.	Clearances Mfr. Min. & Max.	Clearances Serv. Max.
733	675	G-J-S	Rear Governor Gear and Adapter			.0010L / .0025L	.005L
		G-S (DUAL MAGNETO)	Rear Governor Gear and Accessory Housing			.0010L / .0025L	.005L
734	674	G-J-S	Rear Governor Gear - End Clearance			.002L / .024L	.034L
		G-S (DUAL MAGNETO)	Rear Governor Gear - End Clearance			.002L / .037L	.044L
735	772	T-AF	Hydraulic Pump Gear and Adapter			.0010L / .0025L	.004L
		T-AF (DUAL MAGNETO)	Hydraulic Pump Gear and Accessory Housing			.0010L / .0025L	.004L
736	773	T-AF	Hydraulic Pump Gear - End Clearance			.010L / .066L	.076L
		T-AF (DUAL MAGNETO)	Hydraulic Pump Gear - End Clearance			.007L / .032L	.039L
		SECTION III GEAR TRAIN SECTION - VACUUM & TACHOMETER					
737	622	A-B-G-J-S-T-Y-AF	Vacuum Pump Gear and Adapter			.0010L / .0030L	.0045L
737	989	S-T-AF (DUAL MAGNETO)	Vacuum Pump Gear and Accessory Housing			.0010L / .0025L	.004L
737	589	D	Vacuum Pump Gear and Accessory Housing			.0010L / .0025L	.006L
738	590	A-B-G-J-S-T-AF	Vacuum Pump Gear - End Clearance			.010L / .057L	.075L
		D	Vacuum Pump Gear - End Clearance			.003L / .020L	.030L
		Y	Vacuum Pump Gear - End Clearance			.000 / .067L	.075L
		S (DUAL MAGNETO)	Vacuum Pump Gear - End Clearance			.012L / .044L	.055L
		T-AF (DUAL MAGNETO)	Vacuum Pump Gear - End Clearance			.017L / .039L	.050L
739	625	A-B-Y	Tachometer Drive Shaft and Adapter			.0015L / .0035L	.006L
		BD-BE	Tachometer Drive Shaft and Adapter			.0010L / .0050L	.0065L
739	540	D-G-J-S-T-AF	Tachometer Drive Shaft and Accessory Housing			.0015L / .0035L	.006L
740		G-J-S (DUAL DRIVE)	Vacuum Pump Gear and Adapter			.0010L / .0025L	.004L
741	789	G-J-S (DUAL DRIVE)	Vacuum Pump Gear - End Clearance			.000 / .017L	.027L

SECTION III GEAR TRAIN SECTION - VACUUM & TACHOMETER (CONT.)

Ref. New	Ref. Old	Chart	Nomenclature	Dimensions Mfr. Min. & Max.	Dimensions Serv. Max.	Clearances Mfr. Min. & Max.	Clearances Serv. Max.
742	791	G-J-S (DUAL DRIVE)	Idler Gear and Shaft			.0010L / .0030L	.005L
743		G-J-S (DUAL DRIVE)	Idler Gear - End Clearance			.021L / .041L	.060L
744	764	G-J-S (DUAL DRIVE)	Propeller Governor Gear and Adapter			.0013L / .0028L	.005L
		G-J-S (DUAL DRIVE)	Hydraulic Pump Gear and Adapter			.0013L / .0028L	.005L
745	794	G-J-S (DUAL DRIVE)	Propeller Governor or Hydraulic Pump - End Clearance			.000 / .054L	.074L
		SECTION III GEAR TRAIN SECTION - MAGNETO, GENERATOR, STARTER					
746	677	T	Magneto Bearing and Gear			.0005T / .0001L	.0005L
746	549	D	Magneto Bearing and Gear			.0008T / .0001L	.0005L
747	677	T	Magneto Bearing and Crankcase			.0002T / .0007L	(A)
747	561	D	Magneto Drive Bearing and Adapter			.0006T / .0008T	(A)
748		S7	Magneto Bearing and Gear			.0001T / .0010T	(A)
749		S7	Magneto Bearing and Adapter			.000 / .0012L	.0015L
750	987	S-T-AF (DUAL MAGNETO)	Magneto Drive Gear and Crankcase			.0010L / .0025L	.003L
751	988	S-T-AF (DUAL MAGNETO)	Magneto Drive Gear - End Clearance			.005L / .073L	.083L
752		AF	Magneto Drive Gear and Shaft			.001L / .003L	.005L
753		BD-BE	Magneto Drive Gear and Crankcase			.001L / .003L	.005L
754	784	Y	Magneto Shaft Gear and Magneto Case			.001L / .003L	.005L
755	786	Y	Magneto Shaft Gear and Support Assembly			.001L / .003L	.005L
756		Y	Magneto Shaft Gear and Accessory Drive Shaft Gear - End Play			.0075 / .0125	.015
757	787	Y	Accessory Drive Shaft Gear and Support Assembly			.001L / .003L	.005L
758		S	Magneto Gear and Bushing (S4LN-21 and S4LN-1227)			.0005L / .0020L	.0035L
		T	Magneto Gear and Bushing (S6LN-21 and S6LN-1227)			.0015L / .0035L	.0055L

SERVICE TABLE OF LIMITS

PART I DIRECT DRIVE ENGINES

SECTION III GEAR TRAIN SECTION - MAGNETO, GENERATOR, STARTER (CONT.)

Ref. New	Ref. Old	Chart	Nomenclature	Dimensions Mfr. Min. & Max.	Dimensions Serv. Max.	Clearances Mfr. Min. & Max.	Clearances Serv. Max.
758		T-AF (DUAL MAGNETO)	Magneto Gear and Bushing			.0015L / .0035L	.0055L
7095		BD, BE	Bushing - Magneto Drive and Crankcase			.0025T / .0045T	(A)
759	627	D	Generator Gear Bushing and Generator Gear			.0020T / .0035T	(A)
760	628	D	Generator Gear Bushing and Generator Drive Coupling Adapter			.001L / .0028L	.005L
761	632	D	Bendix Drive Gear Bushing and Crankcase			.0005T / .0025T	(A)
762	633	D	Bendix Drive Gear and Bendix Drive Gear Bushing			.0010L / .0025L	.005L
763	634	D	Bendix Drive Shaft and Bendix Drive Housing			.003L / .005L	.010L
764	637	D	Bendix Drive Shaft - End Clearance			.000 / .0059L	.080L

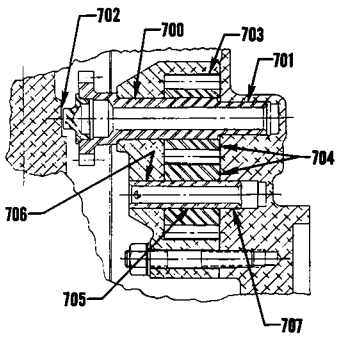

6 CYL-DUAL MAG

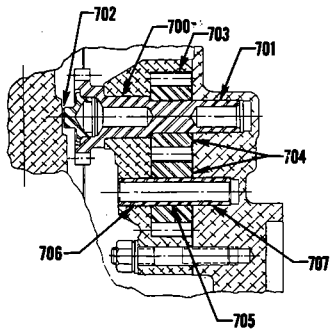

4 CYL-DUAL MAG

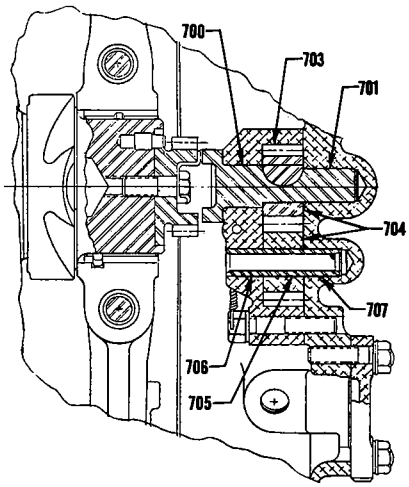

STANDARD TYPE

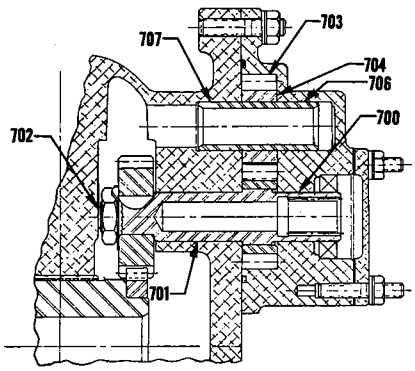

O-320-H,O,LO-360-E

Oil Pumps

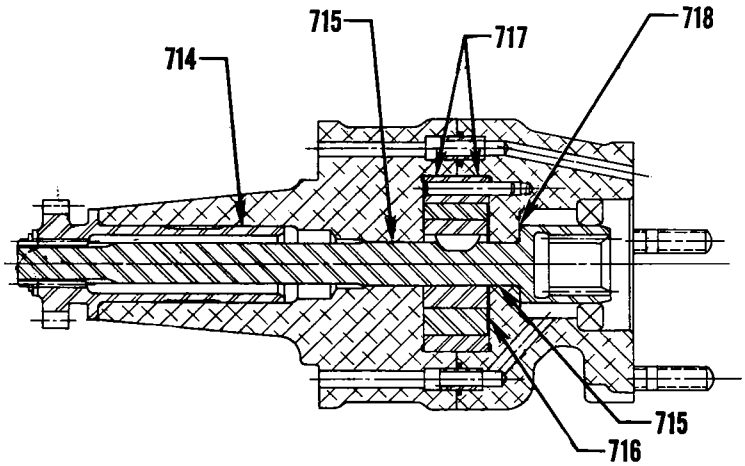

TURBO SCAVENGE PUMP & HYD PUMP (TIO-540-C)
TURBO SCAVENGE PUMP & GOV. (TIO-360)

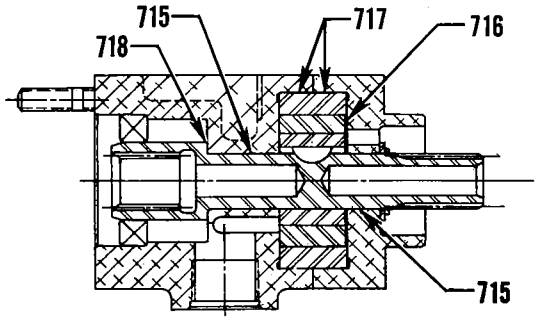

DUAL MAG: TURBO SCAVENGE PUMP & HYD. PUMP

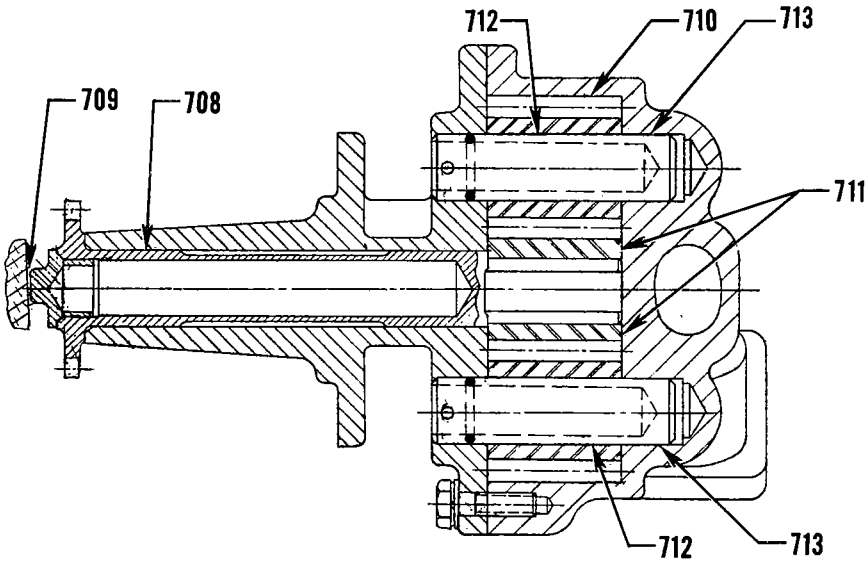

SCAVENGE PUMP AIO 320 & AIO-360

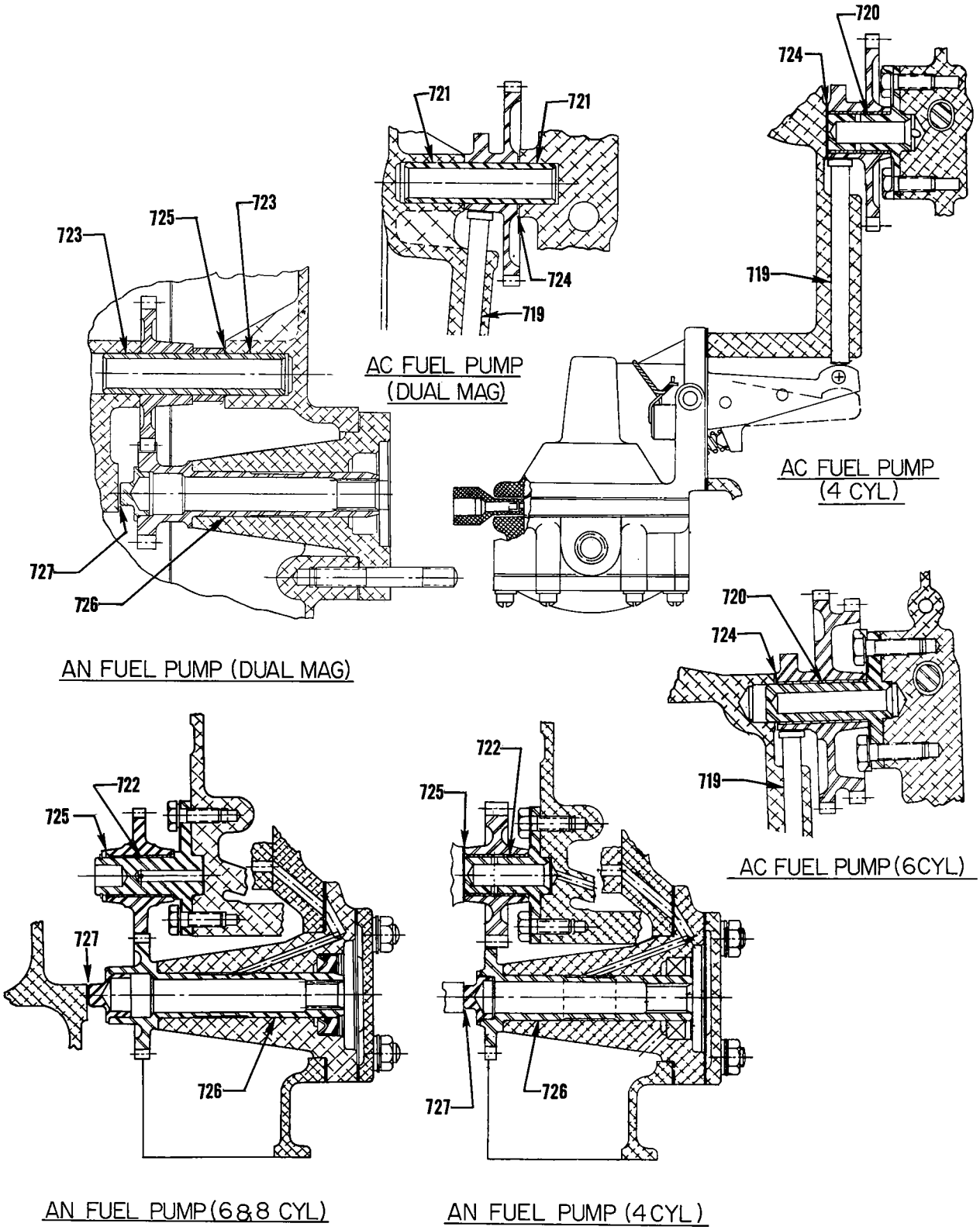
720
724
721
721
723
725
723
724
719
719
AC FUEL PUMP
(DUAL MAG)
AC FUEL PUMP
(4 CYL)
727
726
AN FUEL PUMP (DUAL MAG)
720
724
719
AC FUEL PUMP (6CYL)
722
725
722
725
727
726
727
726
AN FUEL PUMP (6&8 CYL)
AN FUEL PUMP (4 CYL)

Fuel Pumps

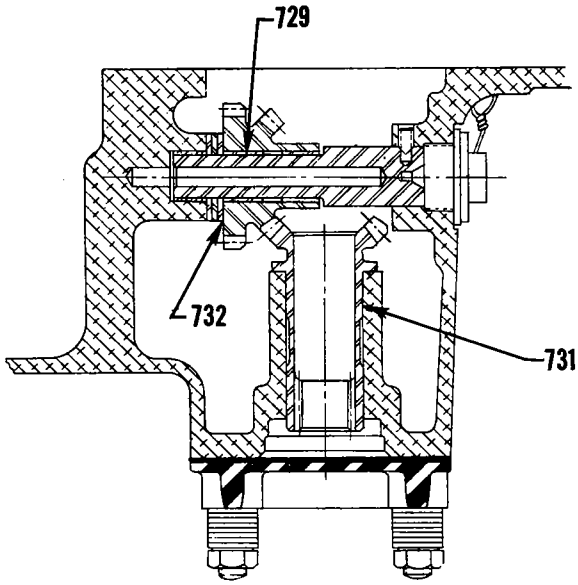

4 & 8 (WIDE DECK)

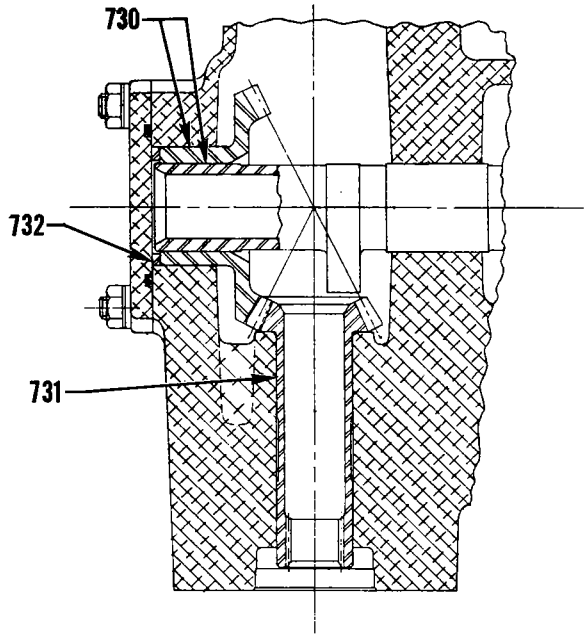

O-320-H O,LO-360-E

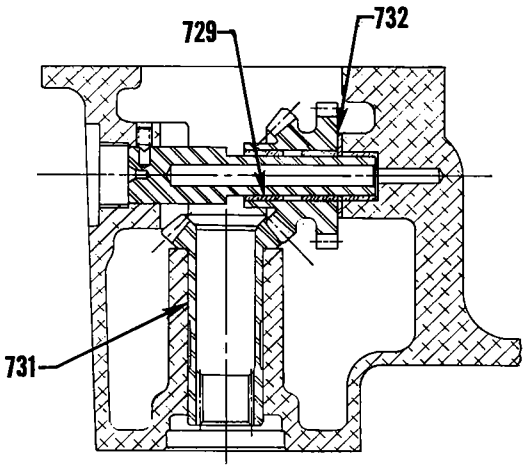

6 CYL. (WIDE DECK) (2200 LB.)

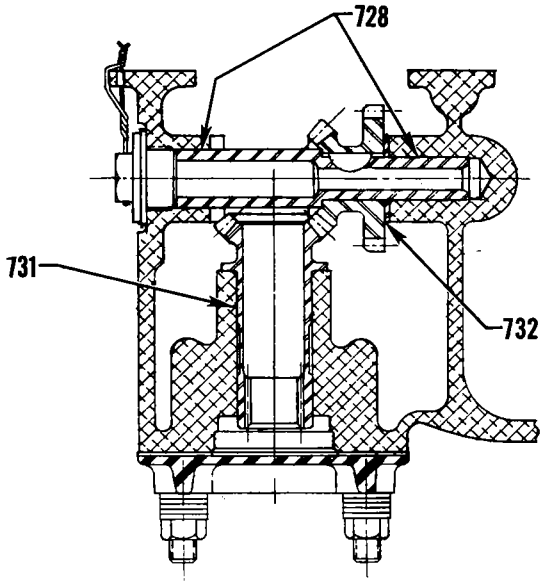

NARROW DECK (6 & 8 CYL.

Front Governor

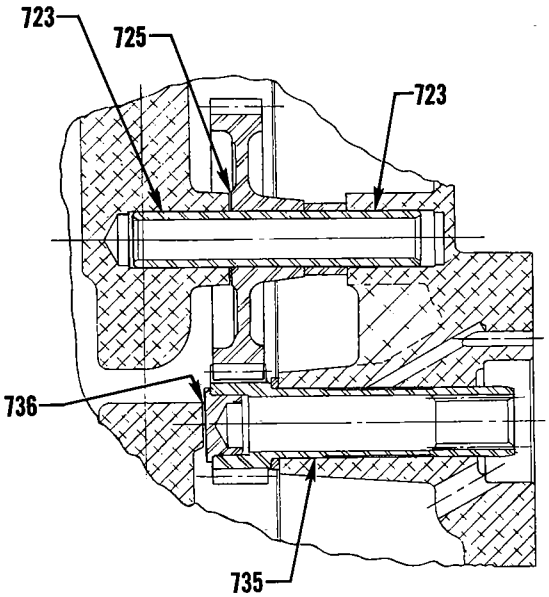

HYDRAULIC PUMP-DUAL MAG

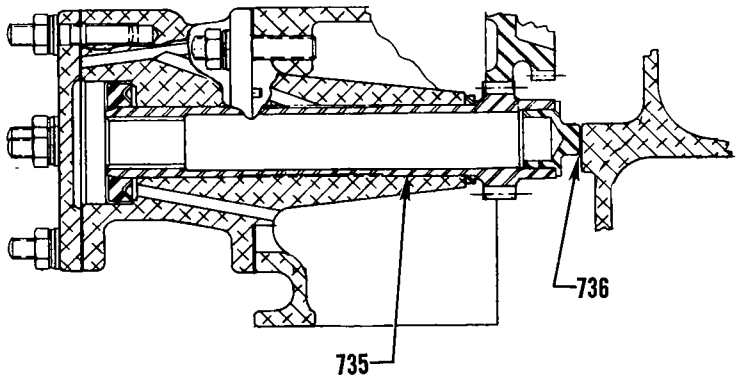

HYDRAULIC PUMP

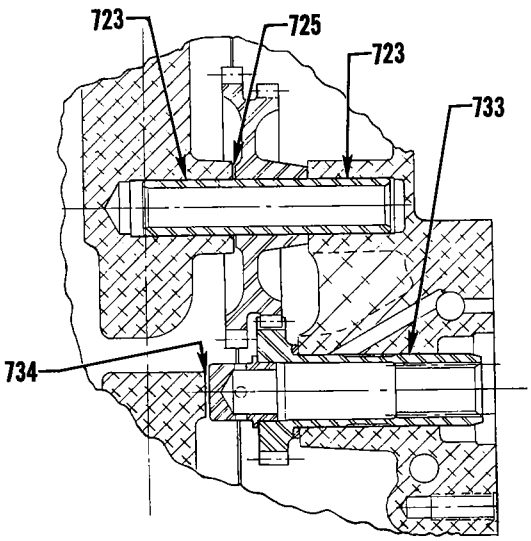

REAR PROP. GOV. (4 CYL.)
(DUAL MAG.)

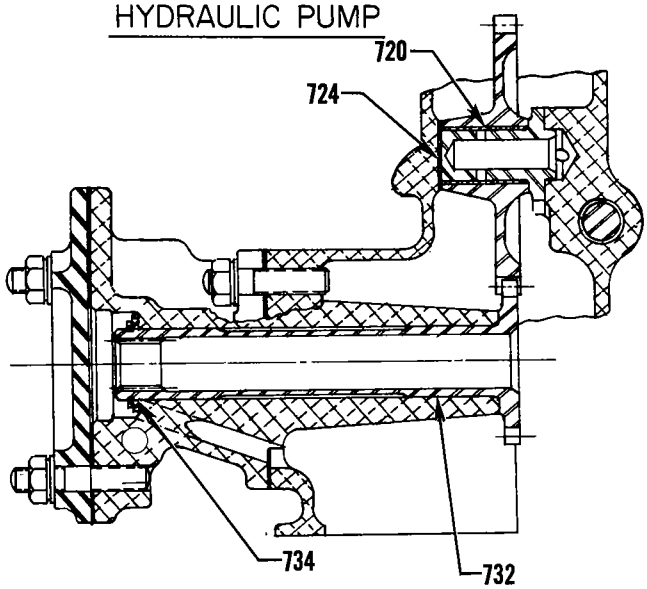

REAR PROP. GOV. (4 CYL.)
(STANDARD)

Rear Governor and Hydraulic Pumps

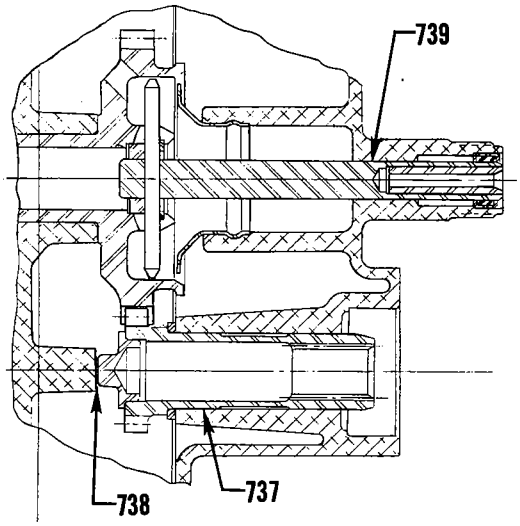

VACUUM PUMP & TACHOMETER

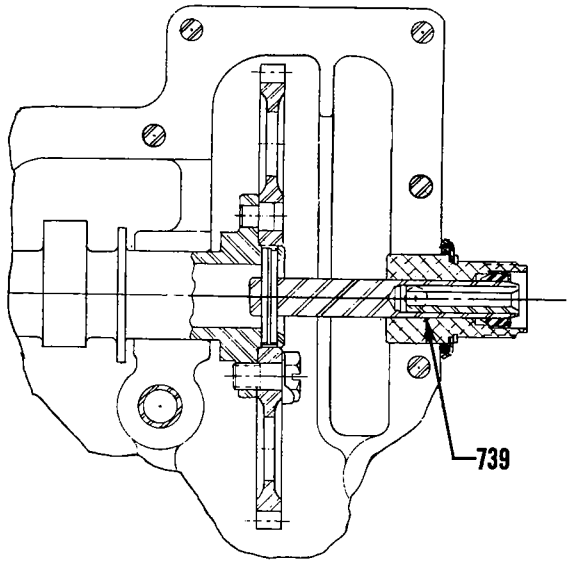

TACHOMETER DRIVE

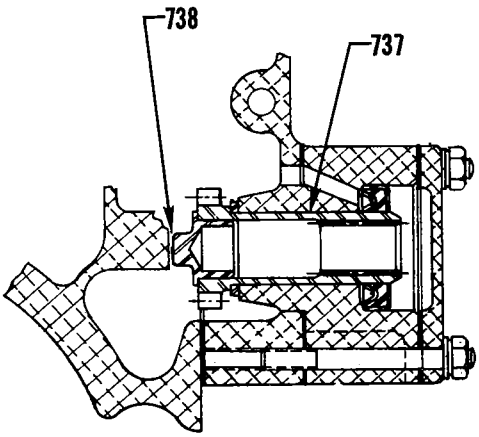

VACUUM PUMP

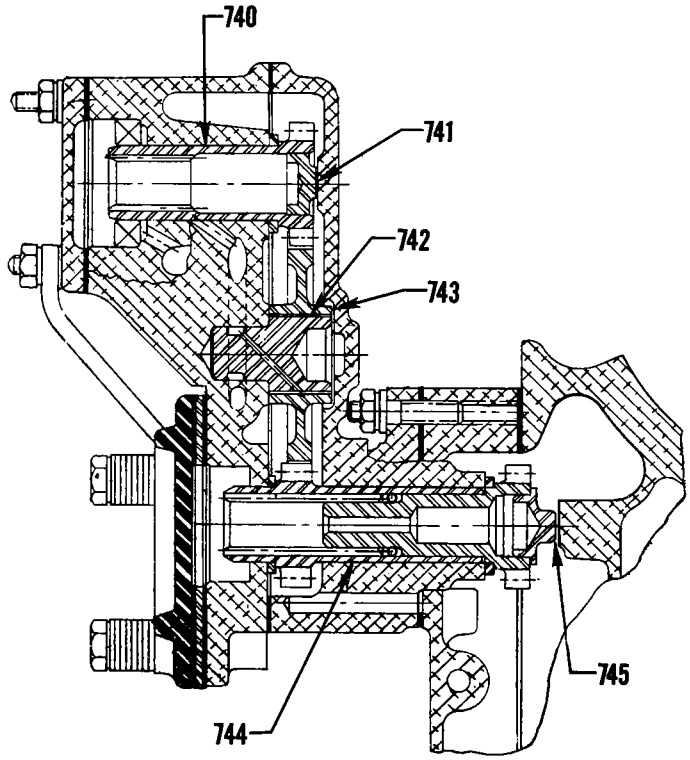

DUAL DRIVE (VACUUM PUMP & PROP. GOV.)
OR (VACUUM PUMP & HYD. PUMP)

Tachometer Drives, Vacuum and Hydraulic Pumps

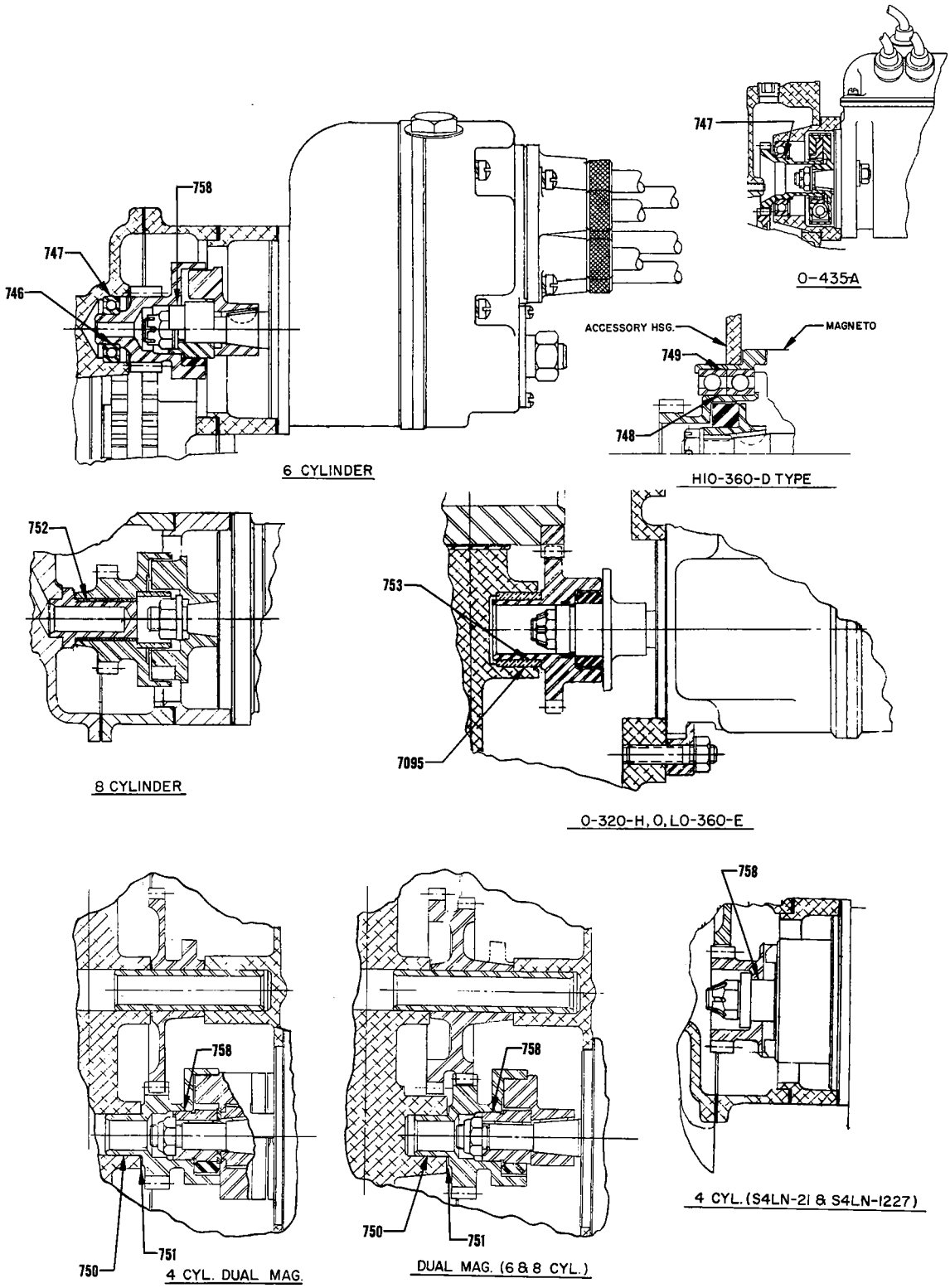
758
747
746
6 CYLINDER
747
O-435A
ACCESSORY HSG.
MAGNETO
749
748
HIO-360-D TYPE
752
8 CYLINDER
753
7095
O-320-H, O, LO-360-E
758
758
750
751
4 CYL. DUAL MAG.
758
750
751
DUAL MAG. (6 & 8 CYL.)
4 CYL. (S4LN-21 & S4LN-1227)

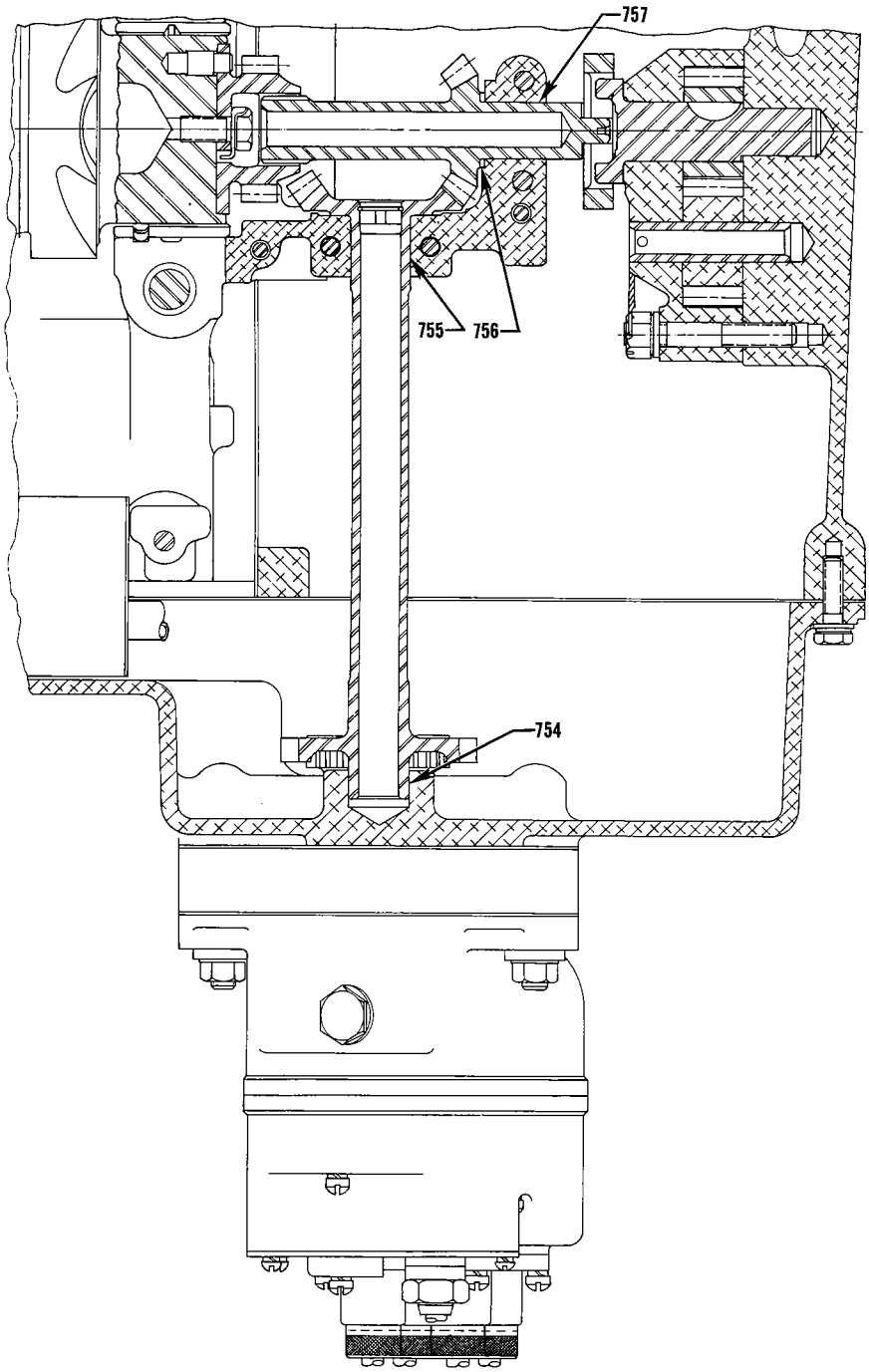

VO, IVO-360

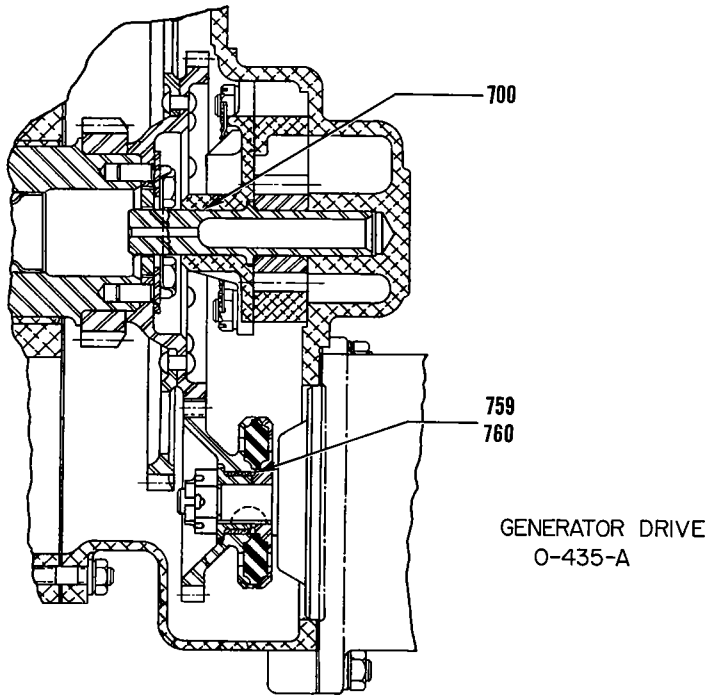

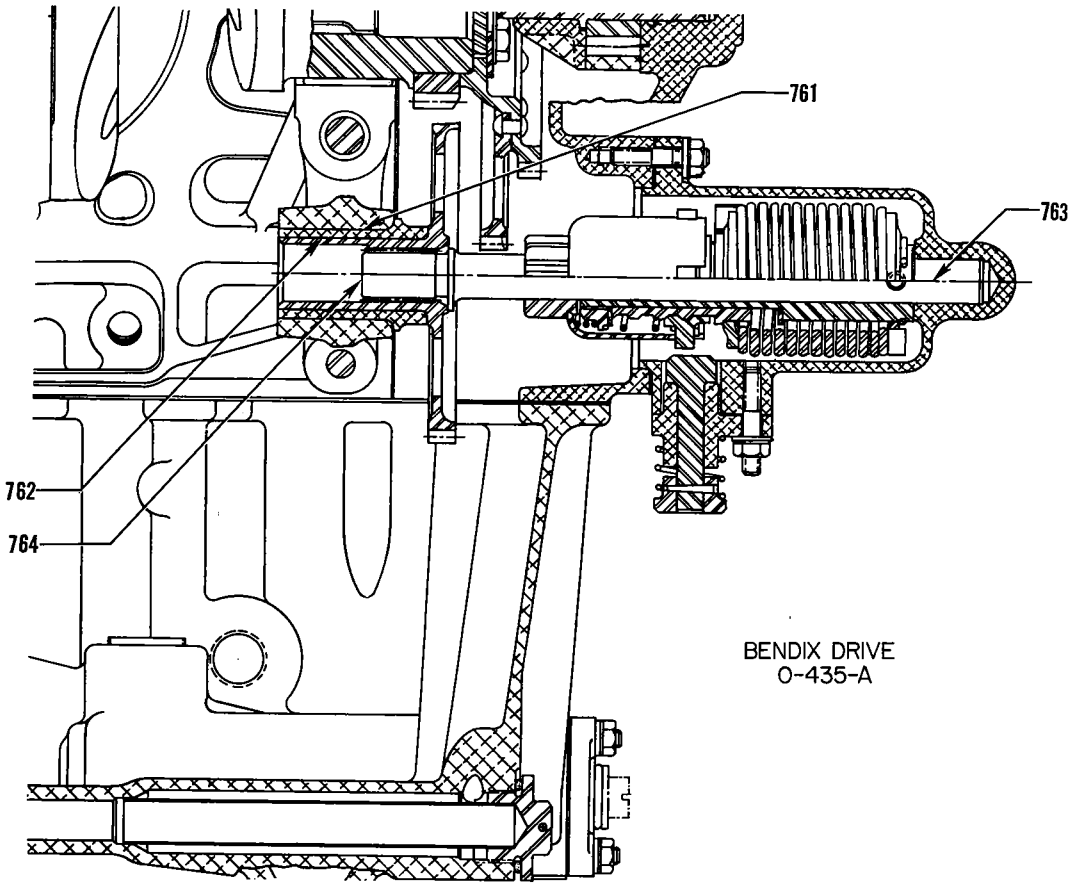

Generator and Bendix Drive

SERVICE TABLE OF LIMITS

PART 1 DIRECT DRIVE ENGINES

SECTION IV BACKLASH

Ref. New	Ref. Old	Chart	Nomenclature	Dimensions Mfr. Min. & Max.	Dimensions Serv. Max.	Clearances Mfr. Min. & Max.	Clearances Serv. Max.
800	623 979	A-B-G-J-S-T-Y-AF	Camshaft and Vacuum Pump - Backlash			.004/.015	.020
801	1002	BD-BE	Camshaft and Vacuum and Oil Pump Drive - Backlash			.006/.014	.020
802	623	Y	Camshaft and Fuel Pump - Backlash			.004/.015	.020
803	616 978	A-B-G-J-S-T-Y-AF	Camshaft and Crankshaft Idler - Backlash			.004/.015	.020
804	617 972	A-B-G-J-S-T-Y-AF	Crankshaft and Crankshaft Idler - Backlash			.004/.015	.020
805	618 977	A-B-G-J-S-T-AF	Magneto Drive and Crankshaft Idler - Backlash			.004/.015	.020
806	1004	BD-BE	Magneto Drive and Crankshaft Gear - Backlash			.006/.014	.020
807	1003	BD-BE	Crankshaft Gear and Vacuum and Oil Pump Drive - Backlash			.006/.014	.020
808	553	A-B-D-G-J-S-T-Y-AF	Oil Pump Impellers - Backlash			.008/.015	.020
		BD-BE	Oil Pump Impellers - Backlash			.008/.012	.020
809	975	S-T-AF (DUAL MAGNETO)	Oil Pump Drive and Crankshaft Idler - Backlash			.004/.015	.020
810	783	Y	Magneto and Magneto Shaft Gear - Backlash			.004/.015	.020
811	785	Y	Accessory Drive Shaft Gear and Magneto Driven Shaft Gear - Backlash			.003/.005	.012
812	788	Y	Crankshaft Gear and Accessory Drive Shaft Gear - Spline Backlash			.002/.005	.015
813		G-J-S (DUAL DRIVE)	Camshaft and Propeller Governor or Hydraulic Pump - Backlash			.004/.015	.020
814	793	G-J-S (DUAL DRIVE)	Governor or Hydraulic Pump Drive and Drive Gear - Spline Backlash			.0013/.0073	.010
815	792	G-J-S (DUAL DRIVE)	Governor or Hydraulic Pump and Idler - Backlash			.004/.015	.020
816	790	G-J-S (DUAL DRIVE)	Vacuum Pump and Idler - Backlash			.004/.015	.020
817	765	S-T-AF	AN Fuel Pump Idler and Crankshaft Idler - Backlash			.004/.015	.020
818	766 976	S-T-AF	AN Fuel Pump Idler and Fuel Pump Drive - Backlash			.004/.015	.020

SERVICE TABLE OF LIMITS

PART 1 DIRECT DRIVE ENGINES

SECTION IV BACKLASH

Ref. New	Ref. Old	Chart	Nomenclature	Dimensions Mfr. Min. & Max.	Dimensions Serv. Max.	Clearances Mfr. Min. & Max.	Clearances Serv. Max.
819	973	S-T-AF (DUAL MAGNETO)	Crankshaft Gear and AN Fuel Pump Idler - Backlash			.004/.015	.020
820	974	T-AF	Hydraulic Pump and Crankshaft Idler - Backlash			.004/.015	.020
821	676	G-J-S	Propeller Governor Drive and Crankshaft Idler - Backlash (Rear Governor)			.004/.015	.020
822		G1-G2-S2-S4-S6-T-AF	Propeller Governor Idler and Camshaft - Backlash (Front Governor)			.004/.015	.020
823	669	G1-G2-S2-S4-S6-T-AF	Propeller Governor Drive and Idler - Backlash (Bevel Gears) (Front Governor)			.004/.008	.015
824	669	BD-BE	Propeller Governor Drive and Camshaft - Backlash (Bevel Gears) (Front Governor)			.003/.011	.015
825	550	D	Crankshaft Timing Gear and Camshaft Gear - Backlash			.004/.015	.020
826	551	D	Camshaft Gear and Generator Gear - Backlash			.004/.015	.020
827	552	D	Crankshaft Gear and Generator Gear - Backlash			.004/.015	.020
828	562	D	Magneto Coupling Spline - Backlash			.001/.005	.0075
829	621	D	Vacuum Pump Gear and Vacuum Pump Drive Gear - Backlash			.004/.015	.020
830	635	D	Starter Drive and Bendix Drive Gear - Backlash			.004/.015	.020
831	636	D	Bendix Drive Shaft Spline and Bendix Drive Gear Spline - Backlash			.001/.006	.015
832	766	S	Injector Pump Idler Gear and Injector Pump Drive Shaft Gear - Backlash			.004/.015	.020

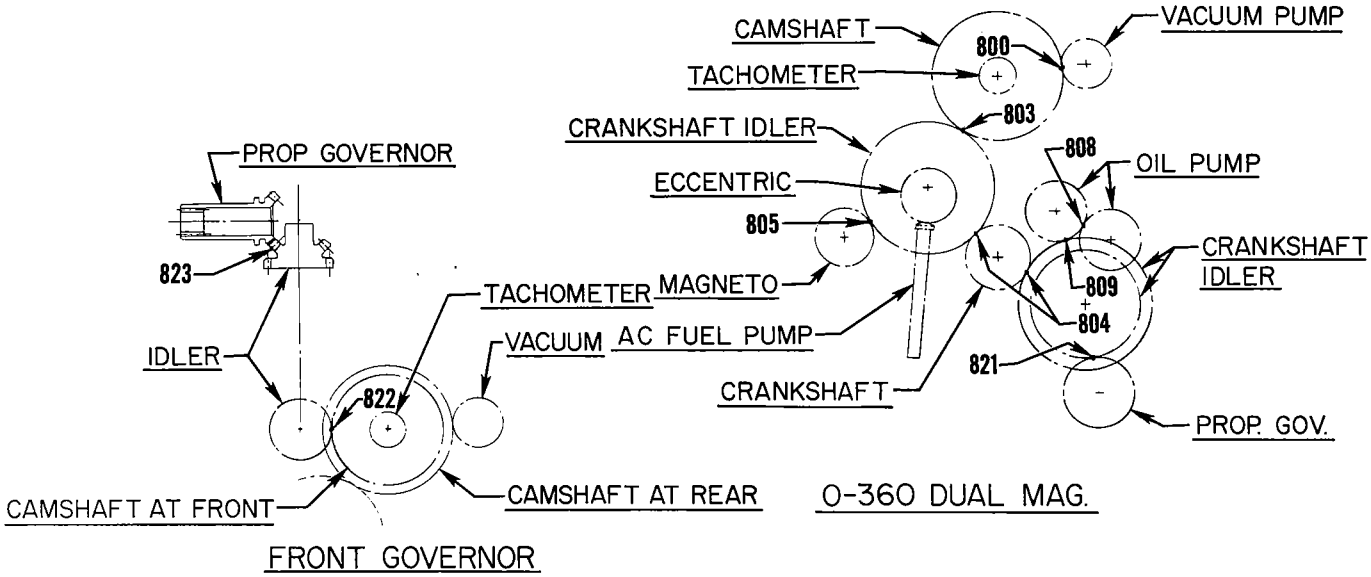

FRONT GOVERNOR

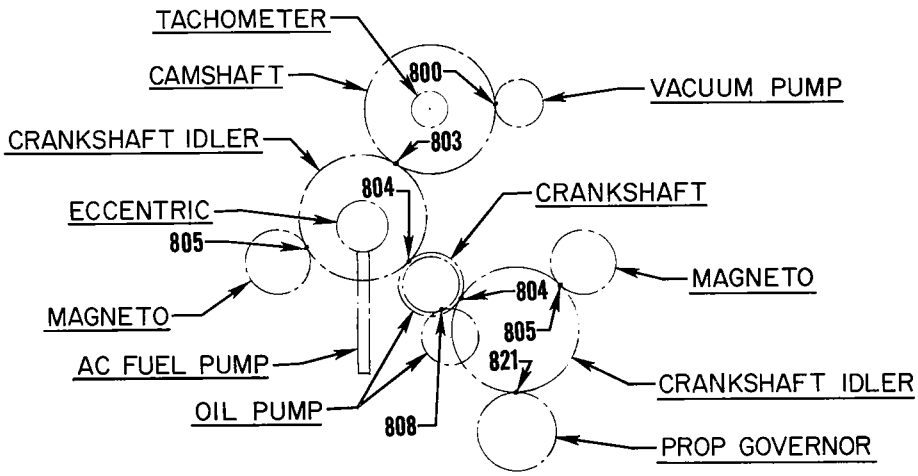

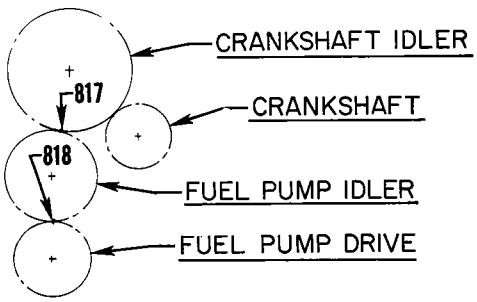

AN FUEL PUMP OPTION

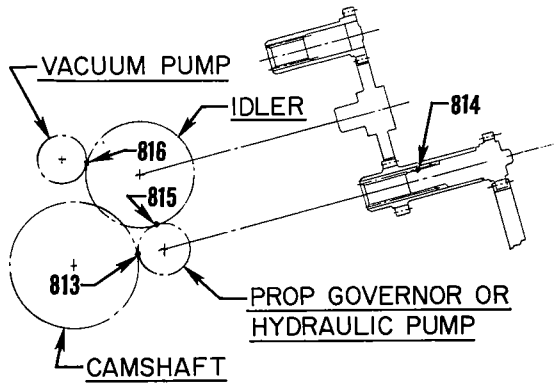

DUAL DRIVE OPTION

0-235, 0-320, 0-340 & 0-360

ALL VIEWS SHOWN FROM REAR OF ENGINE

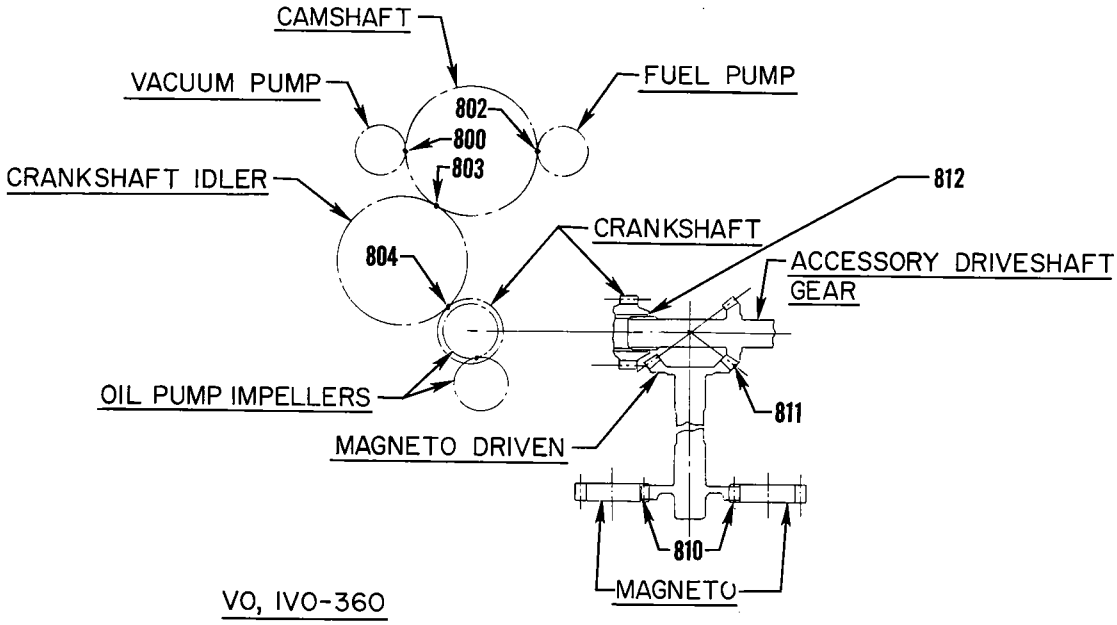

VO, IVO-360

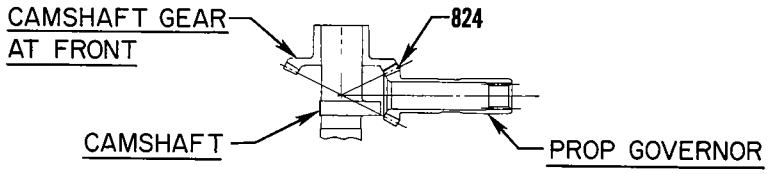

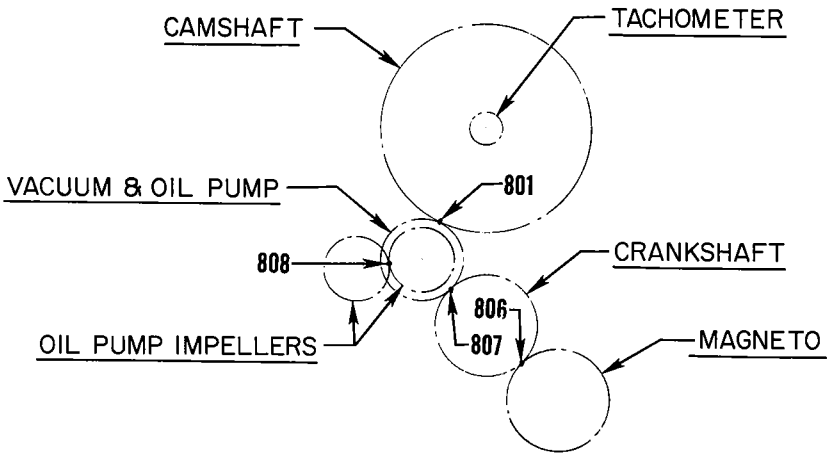

O-320-H, O, LO-360-E

ALL VIEWS SHOWN FROM REAR OF ENGINE

Backlash (Accessory Drives)

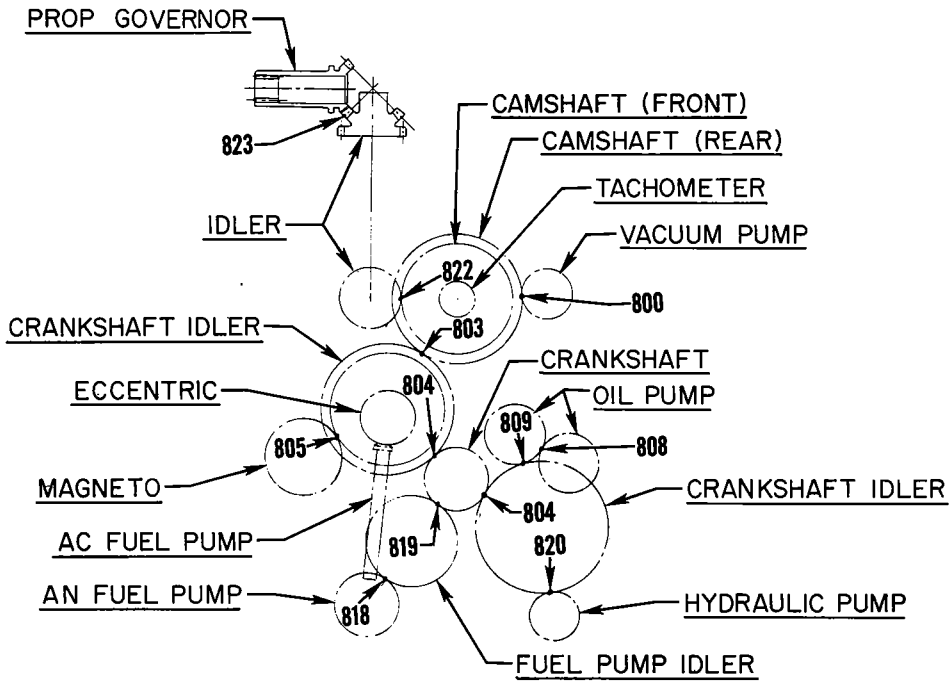

0-540 & 10-720 DUAL MAG.

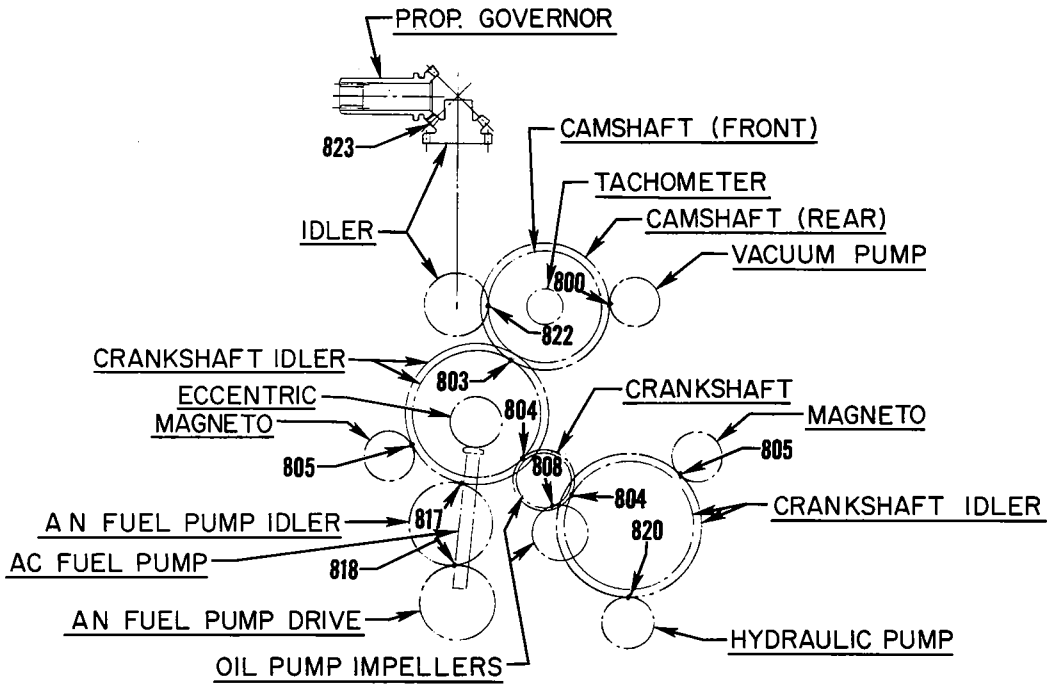

0-540 & 10-720

ALL VIEWS FROM REAR OF ENGINE

Backlash (Accessory Drives)

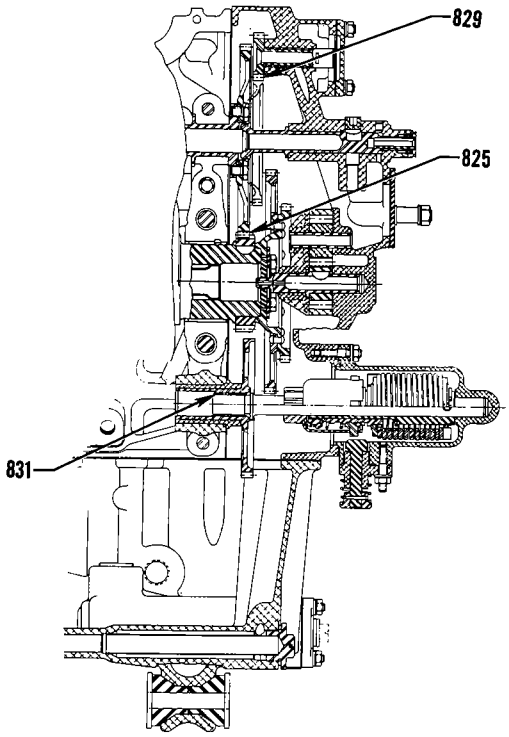

ACCESSORY HOUSING
O-435-A

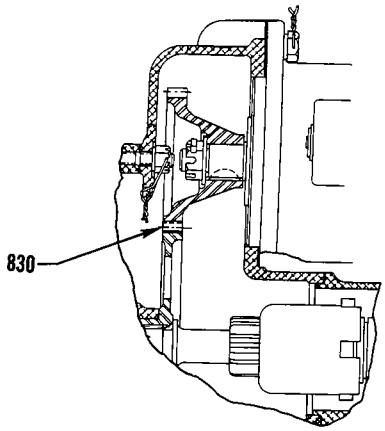

STARTER DRIVE
O-435-A

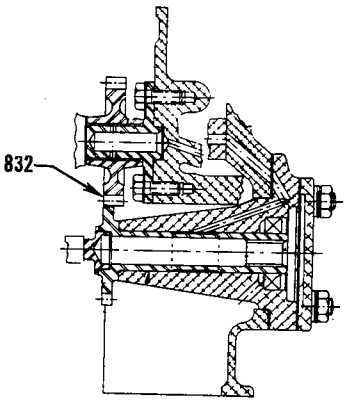

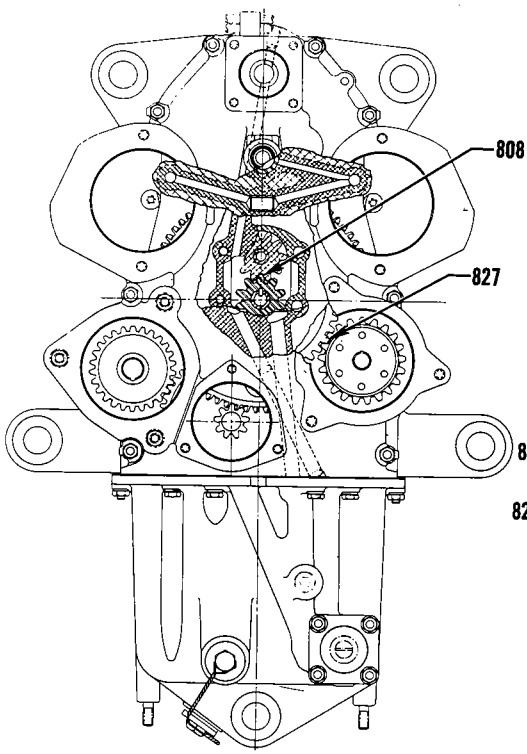

SECTION THRU REAR
OF ENGINE

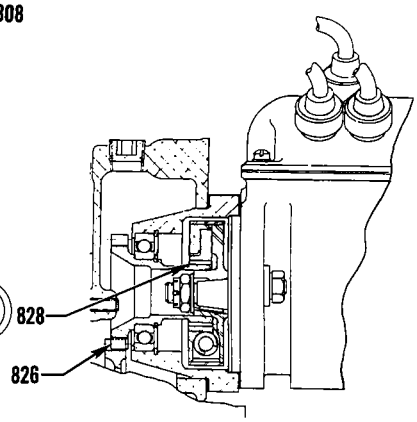

MAGNETO DRIVE
O-435-A

Backlash (Accessory Drives)

SERVICE TABLE OF LIMITS

PART 1 DIRECT DRIVE ENGINES

SECTION V SPECIAL TORQUE REQUIREMENTS

Ref. New	Ref. Old	Chart	Thread Size	Nomenclature	Torque Limits
900	829	A-B-D-G-Y-S-T-BD-BE	3/8-24	Connecting Rod Nuts	480 in. lbs.
		J	3/8-24	Connecting Rod Nuts	360 in. lbs.
		S1-S3-S5-S6-S7-S9-T3-AF	3/8-24	Connecting Rod Bolts - Tighten to Length	2.255 - 2.256
901	878	BD-BE	9/16-18	Oil Pump Shaft Nut	660 in. lbs.
902	877	BD-BE	5/16-24	Rocker Stud Nut	150 in. lbs.
903	840	ALL (AS APPLICABLE) (EXCEPT S7)	3/8-24	Magneto Nut (To attach drive member to magneto) - Bendix - Sintered Bushing - Gray	120 - 150 in. lbs.
				Magneto Nut (To attach drive member to magneto) - Bendix - Steel Bushing	170 - 300 in. lbs.
				Magneto Nut (To attach drive member to magneto) - Slick	120 - 300 in. lbs.
		S7	1/2-20	Magneto Nut (To attach drive member to magneto)	170 - 300 in. lbs.
904	839	ALL	10-32	Magneto Plate Screws (To attach ignition cable outlet plate to magneto)	15 in. lbs.
905	853	ALL	1/4-20	Rocker Box Screws	50 in. lbs.
906	852	ALL	5/16-18	Exhaust Port Studs	40 in. lbs. min.
907	830	ALL	18MM	Spark Plugs	420 in. lbs.
908	860	ALL	1/8-27 NPT	Fuel Pump Vent Fitting (Approximately two turns beyond finger tight)	96 in. lbs.
909	862	ALL	5/8-32	Alternator Pulley Nut	450 in. lbs.
910	864	ALL	1/4-28	Alternator Output Terminal Nut	85 in. lbs.
911	865	ALL	10-32	Alternator Auxiliary Terminal Nut	30 in. lbs.
912		ALL	5/16-24	Starter Terminal Nut	24 in. lbs.
913	857	ALL (AS APPLICABLE)	1/16-27 NPT	Piston Cooling Nozzle in Crankcase	100 in. lbs.
914	854	Y-S-T-AF	1/8-27 NPT	Injector Nozzle in Cylinder Head	60 in. lbs.
915	869	ALL (AS APPLICABLE)	3/4-16	Oil Filter Bolt (AC Can and Element Type)	300 in. lbs.
		ALL (AS APPLICABLE)	13/16-16	Oil Filter (Throw Away Type)	240 in. lbs.
	874	ALL (AS APPLICABLE)	3/4-16	Converter Stud	720 in. lbs.
916		ALL (AS APPLICABLE)	3/4-18 NPT	Carburetor Drain Plug	144 in. lbs.
917		ALL (AS APPLICABLE)	1.00-14	Oil Cooler Bypass Valve	300 in. lbs.
918		ALL (AS APPLICABLE)	1 1/4-12	Oil Pressure Relief Valve	300 in. lbs.

SERVICE TABLE OF LIMITS

PART 1 – DIRECT DRIVE ENGINES

SECTION V – SPECIAL TORQUE REQUIREMENTS (CONT.)

New Ref.	Old Ref.	Chart	Thread Size	Nomenclature	Torque Limits
919	871	ALL	1/4 Hex Head and Below	Hose Clamps (Worm Type)	20 in. lbs.
			5/16 Hex. Head and Above	Hose Clamps (Worm Type) (Metal to metal: example: heat shield to exhaust pipe)	45 in. lbs.
			5/16 Hex. Head and Above	Hose Clamps (Worm Type)	30 – 35 in. lbs.
920	875	ALL		Cylinder Head Drain Back Hose Clamps	10 in.-lbs.

921		S-T	Exhaust V-Band Coupling Torque Data			
		Coupling Size Tube OD	Lycoming Part Number	Vendor Part Number	T-Bolt Split Type Locknut Torque In. Lbs.	1/4 In. Drilled Hex Nut With Safety Wire Torque In. Lbs.
		1.75 in.	LW-12093-4	MVT69183-175	65	75
		2.00 in.	LW-12093-5	MVT69183-200	85	75
		2.25 in.	LW-12093-6	MVT69183-225	85	75
		2.25 in.	LW-12125-3	MVT69197-225	85	
		3.69 in.	LW-13464	U4204-55-369M	70	
		3.69 in.	LW-14985	ANH1000902-10	70	

922		ALL	Turbocharger V-Band Torque Data		
		Turbocharger Model No.	V-Clamp Part No.	V-Clamp Diameter	Torque In. Lbs.
		TO-473*	400500-600	6.00 in.	40 – 80
		TEO659*	400500-685	6.85 in.	40 – 50
		THO8A60*	400500-775	7.75 in.	40 – 60
		THO8A69*	400500-775	7.75 in.	40 – 60
		301E10-2**	TC-6-15	6.50 in.	15 – 20
		* - AiResearch turbocharger. ** - Rajay turbocharger. See latest revision of Service Instruction No. 1238 for assembly procedure.			

		Chart	Thread Size	Nomenclature	Torque Limits
927	863	ALL DUAL MAG. MODELS	1/2-20	Crankshaft Gear Bolt	660 in. lbs.
		BD	1/4	Crankshaft Gear Bolts	96 – 120 in. lbs.
928		ALL	3/8-16	Cylinder Hold Down Studs (Crankcase Driving Torque)	100 in. lbs.
			7/16-14	Cylinder Hold Down Studs (Crankcase Driving Torque)	200 in. lbs.
			1/2-13	Cylinder Hold Down Studs (Crankcase Driving Torque)	250 in. lbs.
929	858	A-B-D-BD-BE-J-G-Y-S-T-AF	3/8	Cylinder Hold Down Nuts	300 in. lbs.
		A1	7/16	Cylinder Hold Down Nuts	420 in. lbs.
		B-D-BD-BE-J-G-Y-S-T-AF	1/2	Cylinder Hold Down Nuts	600 in. lbs.
		Cylinder Hold Down and Crankcase Parting Flange Nuts' Tightening Procedures – See latest revision of Service Instruction No. 1029			

SERVICE TABLE OF LIMITS

PART 1 DIRECT DRIVE ENGINES

SECTION V SPECIAL TORQUE REQUIREMENTS (CONT.)

Ref. New	Ref. Old	Chart	Thread Size	Nomenclature	Torque Limits
930	849	ALL	3/8	Allen Head Screw (Diaphragm Fuel Pump)	225 - 250 in. lbs.
931		A	9/16	Locking Nut (Valve Adjusting Screw)	450 in. lbs.
932	858	ALL	5/16-18	Exhaust Transitions - Studs (Driving Torque)	100 in. lbs.
		ALL	3/8-16	Exhaust Transitions - Studs (Driving Torque)	200 in. lbs.

SECTION V SPRINGS

		Chart	Nomenclature	Avco Lyc. Part No.	Wire Dia.	Length At Comp. Length	COMP. LOAD Mfr. Min.	Mfr. Max.	Serv. Max.
950	800	A-B-D-G-J-S-T-Y-BD-BE	Outer Valve Springs (Parallel)	76994 LW-11800	.177	1.30 in.	112 lb.	122 lb.	109 lb. min.
		A-B-D-G-J-S-T-Y-BD-BE	Outer Valve Springs (Parallel)	65427	.162	1.30 in.	82 lb.	89 lb.	79 lb. min.
		S1-S2-S3-S5-S6-S7-S9-S10-T2-T3	Outer Valve Springs (Angle)	68326	.177	1.46 in.	103 lb.	111 lb.	100 lb. min.
		S1-S2-S3-S5-S6-S7-S9-S10-T2-T3	Outer Valve Springs (Angle)	LW-11796	.182	1.43 in.	116 lb.	124 lb.	113 lb. min.
951	801	A-B-D-G-J-S-T-Y-BD-BE	Auxilliary Valve Spring (Parallel)	65567 LW-11795	.135	1.17 in.	61 lb.	67 lb.	58 lb. min.
		S1-S2-S3-S5-S6-S7-S9-S10-T2-T3-AF	Auxilliary Valve Spring (Angle)	68328 LW-11797	.142	1.33 in.	75 lb.	83 lb.	72 lb. min.
952	802 803	ALL (AS APPLICABLE)	Oil Pressure Relief Valve Spring						
		Avco Lycoming Part Numbers	Identification: Dye	Free Length					
		61084	None	2.18	.054	1.30 in.	8.5 lb.	9.5 lb.	8.3 lb. min.
		65703	None	2.16	.063	1.47 in.	17.8 lb.	19.4 lb.	18.0 lb. min.
		68668	Purple	2.04	.054	1.30 in.	7.1 lb.	7.8 lb.	6.9 lb. min.
		77467	Yellow	1.90	.054	1.30 in.	6.4 lb.	7.1 lb.	6.2 lb. min.
		LW-11713	White	2.12	.059	1.44 in.	10.79 lb.	11.92 lb.	10.5 lb. min.
953	811	A-B-G-J-S-T-Y-AF	Oil Cooler Bypass Spring		.0465	1.94 in.	6.50 lb.	7.25 lb.	6.41 lb. min.
954		BD-BE	Oil Filter Bypass Spring		.047	1.00 in.	3.05 lb.	3.55 lb.	3.0 lb. min.
955	806	D	Magneto Coupling Spring		.091	.603 in.	20 lb.	22 lb.	19 lb. min.

SERVICE TABLE OF LIMITS

STANDARD TORQUE
UNLESS OTHERWISE LISTED

Torque limits for propeller attaching bolts to be supplied by propeller aircraft manufacturer.

TABLE I					
BOLTS, SCREW AND NUTS					
Thread	Torque		Thread	Torque	
	In. Lb.	Ft. Lb.		In. Lb.	Ft. Lb.
10	49	-----	1/2	900	75
1/4	96	-----	9/16	1320	110
5/16	204	17	5/8	1800	150
3/8	360	30	3/4	3240	270
7/16	600	50	-----	-----	-----
THIN NUTS (1/2 DIA. OF BOLT) – 1/2 LISTED TORQUE					

TABLE II	
PIPE PLUGS	
Thread	Torque
	In. Lbs.
1/16-27 NPT	40
1/8-27 NPT	40
1/4-18 NPT	85
3/8-18 NPT	110
1/2-14 NPT	160
3/4-14 NPT	230
1-11-1/2 NPT	315

TABLE III		
CRUSH TYPE GASKETS		
Thread Pitch on Part to be Tightened	ANGLE OF TURN	
Threads Per Inch	Aluminum	Copper
8	135°	67°
10	135°	67°
12	180°	90°
14	180°	90°
16	270°	135°
18	270°	135°
20	270°	135°
24	360°	180°
28	360°	180°

NOTE: Install all crush type gaskets except the self centering type, with the unbroken surface against the flange of the plug or part being tightened against the seal. Turn the part until the sealing surfaces are in contact and then tighten to the angle of turn listed for the appropriate thread size.
NOTE: Lubricate Threads Unless Otherwise Specified.

TABLE IV			
FLEXIBLE TUBE CONNECTIONS (SEALASTIC OR EQUIVALENT FITTINGS)			
Tube Size	Thread	Torque In. Lbs.	
		Aluminum Alloy	Steel
(-3) 3/16	3/8 - 24	25 - 35	95 - 105
(-4) 1/4	7/16 - 20	50 - 65	35 - 150
(-5) 5/16	1/2 - 20	70 - 90	170 - 200
(-6) 3/8	9/16-18	230 - 260	450 - 500
(-10) 5/8	7/8 - 14	330 - 360	650 - 700

TABLE V	
STUDS MN. DRIVING TORQUE	
Threads	Torque In. Lbs.
1/4-20	15
5/16-18	25
3/8-16	50

TABLE Vi		
JAM NUT OR STRAIGHT THREAD O-RING BOSS		
Tube Size	Thread	Torque Ft. Lbs.
-03	3/8 – 24	8 – 9
-04	7/16 – 20	13 – 15
-05	1/2 – 20	14 – 15
-06	9/16 – 18	23 – 24
-08	3/4 – 16	40 – 43
-10	7/8 – 14	43 – 48
-12	1-1/16 – 12	68 – 75
-14	1-3/16 – 12	83 – 90
-16	1-5/16 – 12	112 – 123
-20	1-5/8 – 12	146 – 161
-24	1-7/8 – 12	154 – 170
-32	2-1/2 – 12	218 – 240

SERVICE TABLE OF LIMITS

STANDARD TORQUE (CONT.)
UNLESS OTHERWISE LISTED

TABLE VII									
METAL TUBE FITTINGS									
Dash Nos. Ref.	Tubing OD inches	Wrench torque for tightening AN-818 Nut (pound inches)						Minimum bend radii measured to tubing centerline. Dimension in inches	
		Aluminum-alloy tubing		Steel tubing		Aluminum-alloy tubing (Flare MS33583) for use on oxygen lines only			
		Minimum	Maximum	Minimum	Maximum	Minimum	Maximum	Alum. Alloy	Steel
-2	1/8	20	30	75	85	--	--	3/8	--
-3	3/16	25	35	95	105	--	--	7/16	21/32
-4	1/4	50	65	135	150	--	--	9/16	7/8
-5	5/16	70	90	170	200	100	125	3/4	1-1/8
-6	3/8	110	130	270	300	200	250	15/16	1-5/16
-8	1/2	230	260	450	500	300	400	1-1/4	1-3/4
-10	5/8	330	360	650	700	--	--	1-1/2	2-3/16
-12	3/4	460	500	900	1000	--	--	1-3/4	2-5/8
-16	1	500	700	1200	1400	--	--	3	3-1/2
-20	1-1/4	800	900	1520	1680	--	--	3-3/4	4-3/8
-24	1-1/2	800	900	1900	2100	--	--	5	5-1/4
-28	1-3/4	--	--	--	--	--	--	--	--
-32	2	1800	2000	2660	2940	--	--	8	7

SERVICE TABLE OF LIMITS

PART I - DIRECT DRIVE ENGINES

SECTION V SPECIAL TORQUE REQUIREMENTS

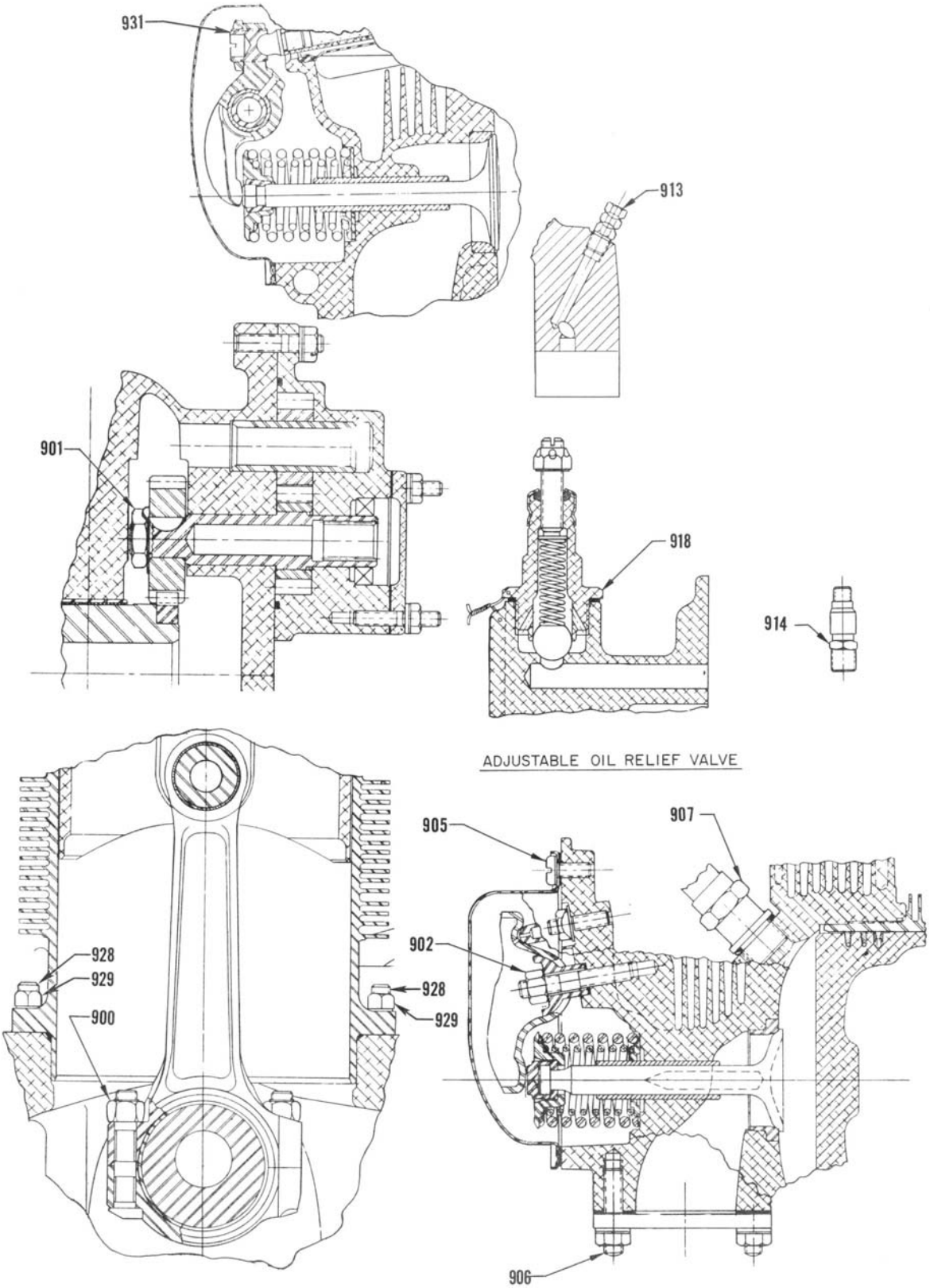

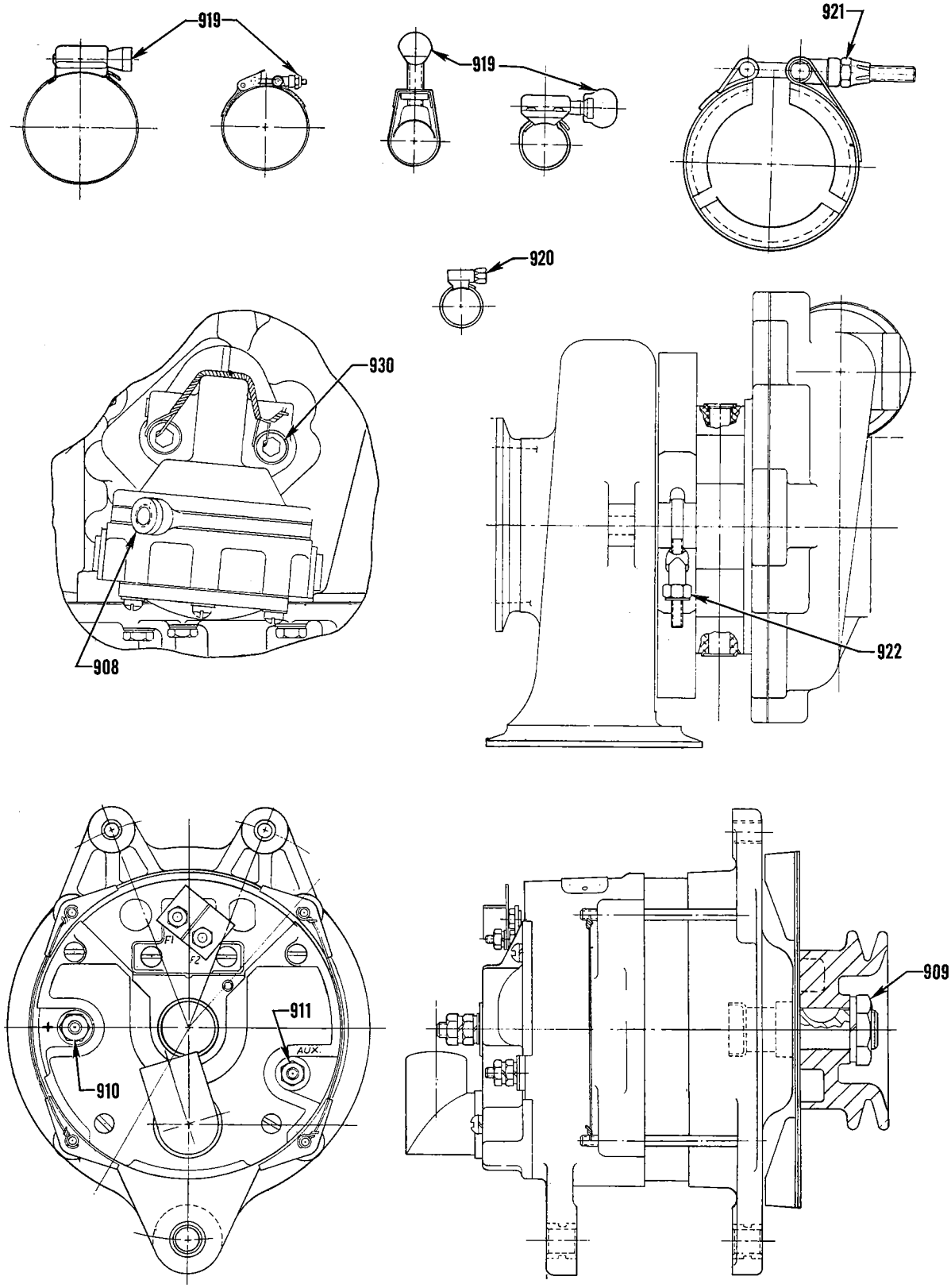

Engine Accessories and Hardware

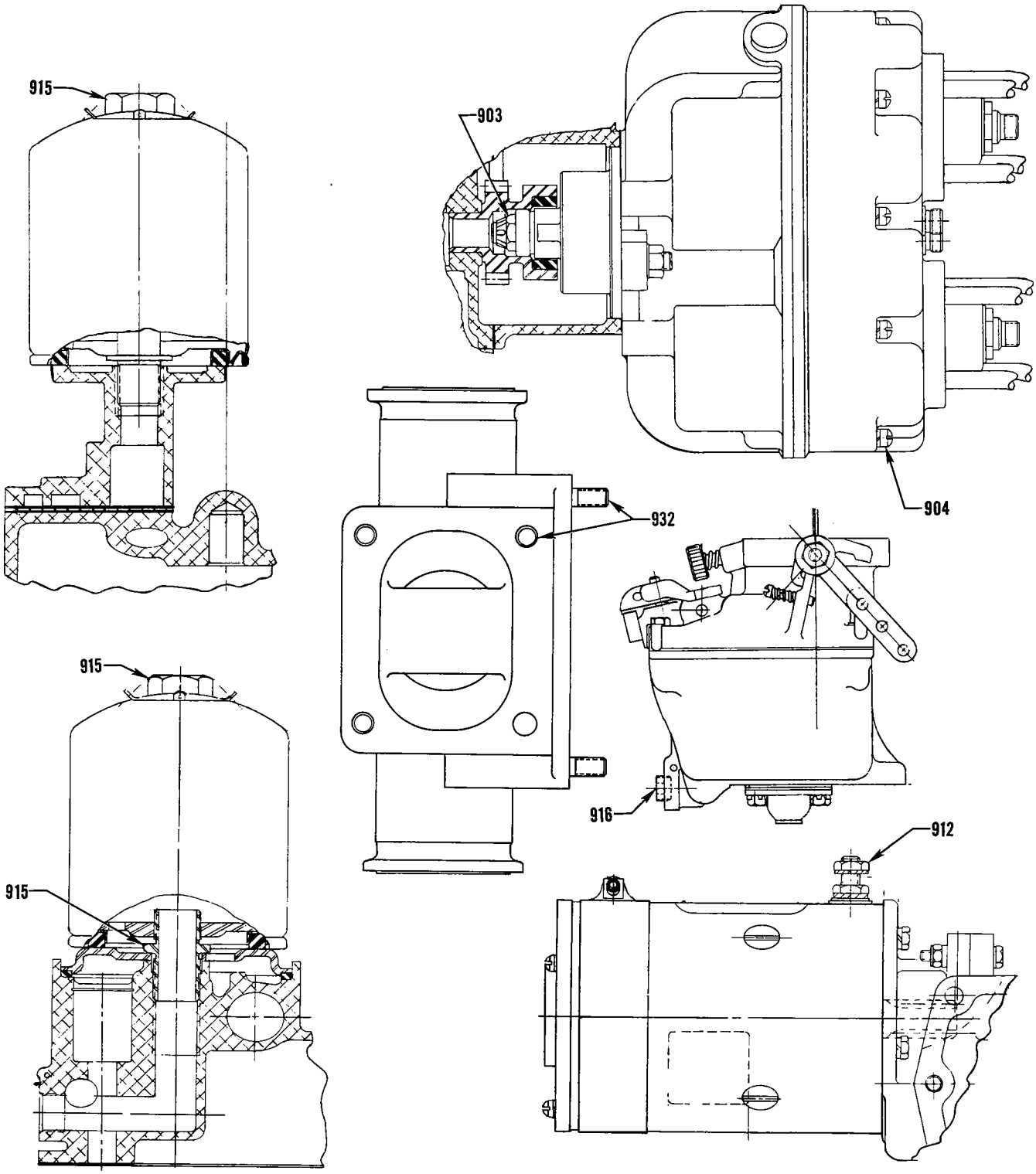

Engine Accessories and Hardware

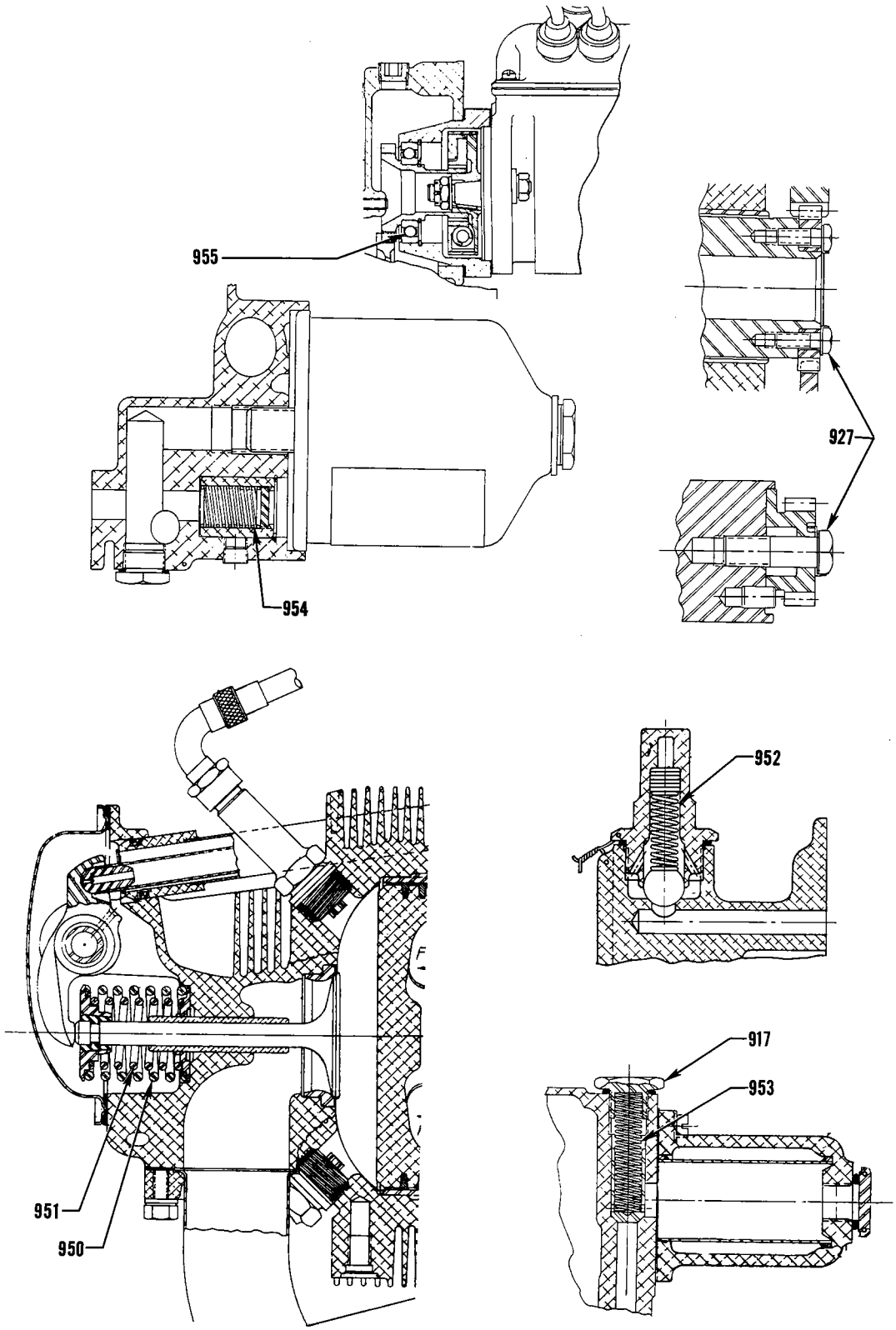

Engine Springs and Hardware