# *PIAGGIO P.180 AVANTI*
# *WIRING MANUAL*

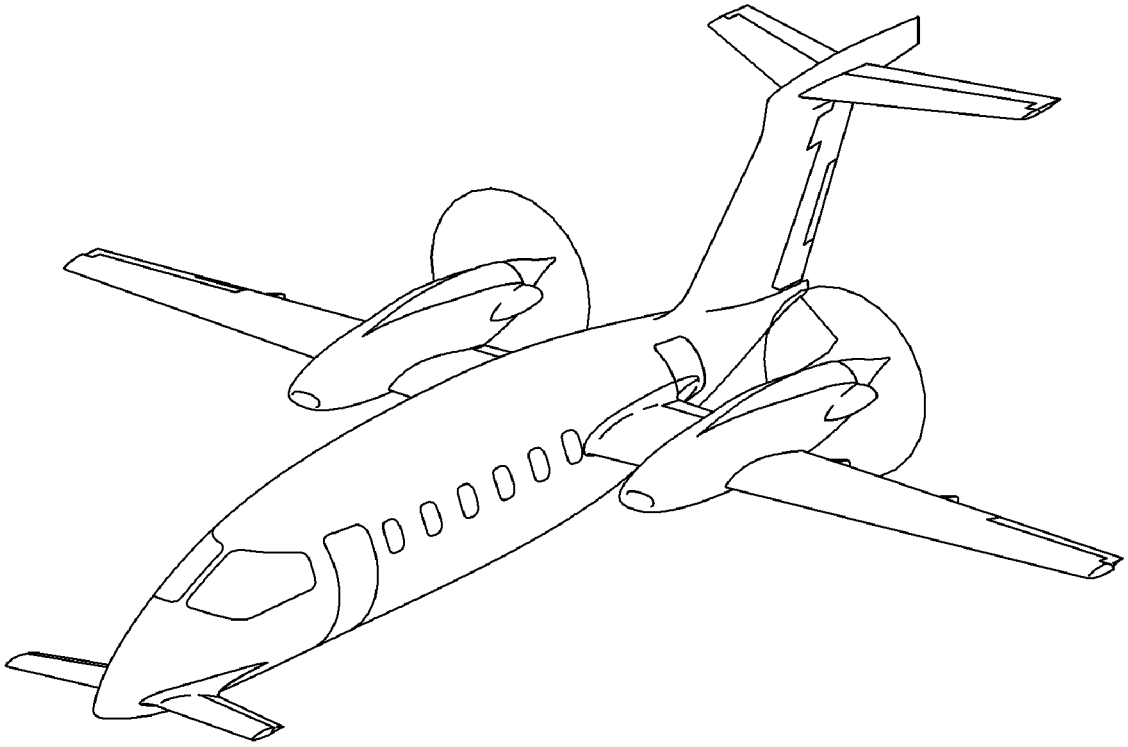

# VOLUME 1
**Introduction thru Chapter 28**

Report No. 9067

Issue No. E0
Issue Date: Oct. 30/09

Revision No: E3
Revision Date: Mar. 19/12

PIAGGIO AERO INDUSTRIES S.p.A
VIA CIBRARIO, 4
16154 GENOVA
ITALY

INTENTIONALLY LEFT BLANK

# LETTER OF TRANSMITTAL

TO: HOLDERS OF REPORT NO. 9067
Wiring Manual - Revision E2

SUBJECT: Revision "E3"of Report 9067 - Wiring Manual - dated Mar. 19/2012

Remove the superseded page listed in the "Remove" column. Insert the new pages dated Mar. 19/2012 as per "Insert" column.

| Remove | Insert |
|---|---|
| TITLE PAGES<br>-Volume 1<br>-Volume 2<br>-Volume 3 | TITLE PAGES<br>-Volume 1<br>-Volume 2<br>-Volume 3 |
| ROR PAGES<br>- All Page | ROR PAGES<br>- All Page |
| ROTR PAGES<br>- All Page | ROTR PAGES<br>- All Page |
| RECORD OF S.B. PAGES<br>- All Page | RECORD OF S.B. PAGES<br>- All Page |
| CHAPTER 20-00-00<br>Maintenance Practices Wiring page 201<br>Maintenance Practices Wiring page 216 | CHAPTER 20-00-00<br>Maintenance Practices Wiring page 201<br>Maintenance Practices Wiring page 216 |
| CHAPTER 24<br>Effect. Pages (All Pages)<br>Contents Pages (All Pages)<br><br>Section 24-30-00 Page 1 Sheet 1<br>Section 24-30-00 Page 2 Sheet 1<br>Section 24-62-40 Page 2 | CHAPTER 24<br>Effect. Pages (All Pages)<br>Contents Pages (All Pages)<br><br>Section 24-30-00 Page 1 Sheet 3<br>Section 24-30-00 Page 2 Sheet 3<br>Section 24-62-40 Page 2 |
| CHAPTER 28<br>Effect. Pages (All Pages)<br>Contents Pages (All Pages)<br><br>Section 28-41-00 - Page 1<br>Section 28-41-00 - Page 3 | CHAPTER 28<br>Effect. Pages (All Pages)<br>Contents Pages (All Pages)<br><br>Section 28-41-00 - Page 1<br>Section 28-41-00 - Page 3 |

| | |
|---|---|
| CHAPTER 31<br>Effect. Pages (All Pages)<br>Contents Pages (All Pages)<br><br>Section 31-12-20 - Page 4 Sheet 1 | CHAPTER 31<br>Effect. Pages (All Pages)<br>Contents Pages (All Pages)<br><br>Section 31-12-20 - Page 4 Sheet 1 |
| CHAPTER 33<br>Effect. Pages (All Pages)<br>Contents Pages (All Pages)<br><br>Section 33-24-00 - Page 4 | CHAPTER 33<br>Effect. Pages (All Pages)<br>Contents Pages (All Pages)<br><br>Section 33-24-00 - Page 4 |
| CHAPTER 34<br>Effect. Pages (All Pages)<br>Contents Pages (All Pages)<br><br>Section 34-43-00 - Page 2 Sheet 2<br>Section 34-45-00 - Page 1<br>Section 34-54-21 - Page 1 Sheet 3<br>Section 34-59-80 - Page 1 Sheet 2<br>Section 34-59-90 - Page 1 Sheet 2 | CHAPTER 34<br>Effect. Pages (All Pages)<br>Contents Pages (All Pages)<br><br>Section 34-43-00 - Page 2 Sheet 2<br>Section 34-45-00 - Page 1<br>Section 34-54-21 - Page 1 Sheet 3<br>Section 34-59-80 - Page 1 Sheet 2<br>Section 34-59-90 - Page 1 Sheet 2 |

Any problems or suggestions regarding this issue should be forwarded in writing to:

PIAGGIO AERO INDUSTRIES S.p.A.
Via Cibrario 4
16154 GENOA
ITALY

Attention: Product Support Department
Fax No. +39-010-6481-374
Phone No. +39-010-6481-348
E-Mail DFois@piaggioaero.it

## RECORD OF REVISIONS

| REV No. | ISSUE DATE | INSERTION DATE | By | REV No. | ISSUE DATE | INSERTION DATE | By | REV No. | ISSUE DATE | INSERTION DATE | By |
|---|---|---|---|---|---|---|---|---|---|---|---|
| A0 | 01/01/1990 | | | | | | | | | | |
| B0 | 01/01/2002 | | | | | | | | | | |
| B1 | 30/03/2002 | | | | | | | | | | |
| B2 | 20/12/2002 | | | | | | | | | | |
| B3 | 31/10/2008 | | | | | | | | | | |
| B4 | 31/10/2003 | | | | | | | | | | |
| B5 | 15/03/2004 | | | | | | | | | | |
| C0 | 30/11/2004 | | | | | | | | | | |
| D0 | 01/03/2006 | | | | | | | | | | |
| D1 | 22/12/2006 | | | | | | | | | | |
| D2 | 19/12/2008 | | | | | | | | | | |
| E0 | 30/10/2009 | | | | | | | | | | |
| E1 | 30/06/2010 | | | | | | | | | | |
| E2 | 30/06/2011 | | | | | | | | | | |
| E3 | 19/03/2012 | 5/2/2012 | ATP/ RLL | | | | | | | | |
| | | | | | | | | | | | |
| | | | | | | | | | | | |
| | | | | | | | | | | | |
| | | | | | | | | | | | |
| | | | | | | | | | | | |
| | | | | | | | | | | | |
| | | | | | | | | | | | |
| | | | | | | | | | | | |
| | | | | | | | | | | | |
| | | | | | | | | | | | |
| | | | | | | | | | | | |
| | | | | | | | | | | | |
| | | | | | | | | | | | |
| | | | | | | | | | | | |

RETAIN THIS RECORD IN THE FRONT OF MANUAL; ON RECEIPT OF REVISIONS, INSERT REVISED PAGES IN THE MANUAL AND ENTER REVISION NUMBER, ISSUE DATE, INSERTION DATE, AND INITIALS.

INTENTIONALLY LEFT BLANK

RECORD OF TEMPORARY REVISIONS

Update this page to show all temporary revisions inserted into this manual.
Revision E3 includes all prior temporary revisions, up to and including TR No. .

| Temporary Revision No. | Section/ Page | Issue Date | Date Inserted | Iserted By | Date Removed | Removed By |
|---|---|---|---|---|---|---|
| | | | | | | |
| | | | | | | |
| | | | | | | |
| | | | | | | |
| | | | | | | |
| | | | | | | |
| | | | | | | |
| | | | | | | |
| | | | | | | |
| | | | | | | |
| | | | | | | |
| | | | | | | |
| | | | | | | |
| | | | | | | |
| | | | | | | |
| | | | | | | |
| | | | | | | |
| | | | | | | |
| | | | | | | |
| | | | | | | |
| | | | | | | |
| | | | | | | |

| Temporary Revision No. | Section/ Page | Issue Date | Date Inserted | Iserted By | Date Removed | Removed By |
|---|---|---|---|---|---|---|
| | | | | | | |
| | | | | | | |
| | | | | | | |
| | | | | | | |
| | | | | | | |
| | | | | | | |
| | | | | | | |
| | | | | | | |
| | | | | | | |
| | | | | | | |
| | | | | | | |
| | | | | | | |
| | | | | | | |
| | | | | | | |
| | | | | | | |
| | | | | | | |
| | | | | | | |
| | | | | | | |
| | | | | | | |
| | | | | | | |
| | | | | | | |
| | | | | | | |

RECORD OF SERVICE BULLETINS

| ATA CHAPTER | SB No. | DATE | TITLE |
|---|---|---|---|
| | SB 80-0001 | No Affected | |
| | SB 80-0002 | No Affected | |
| 21-20-00 | SB 80-0003 | Nov. 15/93 | Air Conditioning - Improvement to Cabin Heating |
| | SB 80-0004 | No Affected | |
| | SB 80-0005 | No Affected | |
| | SB 80-0006 | No Affected | |
| | SB 80-0007 | No Affected | |
| | SB 80-0008 | No Affected | |
| | SB 80-0009 | No Affected | |
| | SB 80-0010 | No Affected | |
| | SB 80-0011 | No Affected | |
| | SB 80-0012 | No Affected | |
| 21-40-00 | SB 80-0013 | July 12/94 | Air Conditioning System - Flight Compartment Heater Installation |
| | SB 80-0014 | No Affected | |
| | SB 80-0015 | No Affected | |
| | SB 80-0016 | No Affected | |
| | SB 80-0017 | No Affected | |
| | SB 80-0018 | No Affected | |
| 34-56-10 | SB 80-0019 | Oct. 26/92 | Flush Mounted GPS Antenna - Installation |
| | SB 80-0020 | No Affected | |
| | SB 80-0021 | No Affected | |
| | SB 80-0022 | No Affected | |
| | SB 80-0025 | No Affected | |
| 61-21-00 | SB 80-0026 Rev 2 | Oct. 26/92 | Propeller Synchrophaser - Installation |
| | SB 80-0027 | No Affected | |
| | SB 80-0028 | No Affected | |
| | SB 80-0029 | No Affected | |
| 34-27-00 | SB 80-0030 | Oct. 26/92 | STDBY Gyro - Modification |
| | SB 80-0031 | No Affected | |
| 21-51-00 | SB 80-0032 | Nov. 15/93 | Nose Avionics Compartment - Installation of DG Mode Switch |

| ATA CHAPTER | SB No. | DATE | TITLE |
|---|---|---|---|
| 34-21-00, 34-22-00 | SB 80-0033 | Nov. 15/93 | Pri/Sec Compass System - Installation of DG Mode Switch |
| | SB 80-0034 | No Affected | |
| 34-23-00 | SB 80-0036 | July 12/94 | EFIS Second Course Function - Modification |
| 23-11-00, 23-12-00 | SB 80-0037 | July 12/94 | VHF Communication Band Extension |
| 34-56-20 | SB 80-0038 | Nov. 15/93 | Navigation System - Rubidium Frequency Unit - Improvement |
| | SB 80-0039 | No Affected | |
| 31-18-00 | SB 80-0040 | May 10/93 | Power Lever "GO-AROUND" and "GEAR MUTE" Switches - Chg. of their mutual position |
| | SB 80-0042 | No Affected | |
| | SB 80-0043 | No Affected | |
| 30-31-00 | SB 80-0044 | July 12/94 | Alternate Static Source - Installation |
| 34-27-00 | SB 80-0045 | April 22/94 | STDBY Gyro Horizon Emergency Power Unit Ground/Interlock Modification (Recommended) |
| 21-52-00 | SB 80-0046 | May 10/93 | Freon Air Conditioning System - Electrical System - Suppression Device Replacement |
| | SB 80-0047 | No Affected | |
| | SB 80-0048 | No Affected | |
| | SB 80-0049 | No Affected | |
| 30-32-00 | SB 80-0050 | July 12/94 | Pitot Heating Monitor - Installation |
| 30-32-00 | SB 80-0050 Rev1 | Dec. 22/08 | Pitot Heating Monitor - Installation riconfiguration N/C 1032,1033 |
| | SB 80-0050 Rev2 | No Affected | |
| 24-31-00 | SB 80-0051 | July 12/94 | External Power Overvoltage Protection - Modification |
| | SB 80-0053 | No Affected | |
| | SB 80-0054 | No Affected | |
| | SB 80-0055 | No Affected | |
| | SB 80-0056 | No Affected | |
| | SB 80-0057 | No Affected | |
| | SB 80-0058 | No Affected | |
| | SB 80-0059 | No Affected | |
| | SB 80-0060 | No Affected | |
| | SB 80-0061 | No Affected | |

| ATA CHAPTER | SB No. | DATE | TITLE |
|---|---|---|---|
| 34-42-00 | SB 80-0062 | July 8/94 | Reduction of Potential Radio-Altimeter Error and Equipment. Part Number Conversion Authorization |
| | SB 80-0063 | No Affected | |
| | SB 80-0064 | No Affected | |
| | SB 80-0065 | No Affected | |
| | SB 80-0066 | No Affected | |
| | SB 80-0067 | No Affected | |
| | SB 80-0069 | No Affected | |
| | SB 80-0070 | No Affected | |
| | SB 80-0071 | No Affected | |
| | SB 80-0072 | No Affected | |
| 32-51-00 | SB 80-0073 | Jan. 8/96 | Steering System - Improvement of the Feedback Potentiometer Tracking Performances - Temporary Fix |
| | SB 80-0076 | No Affected | |
| | SB 80-0077 | No Affected | |
| | SB 80-0080 | No Affected | |
| | SB 80-0081 | No Affected | |
| | SB 80-0082 | No Affected | |
| | SB 80-0083 | No Affected | |
| | SB 80-0084 | No Affected | |
| | SB 80-0085 | No Affected | |
| | SB 80-0086 | No Affected | |
| | SB 80-0087 | No Affected | |
| 27-50-00 | SB 80-0088 | Jun. 2/95 | Flap System - Modification for Compatibility with the Stall Warning System - Temporary Fix |
| | SB 80-0089 | No Affected | |
| 27-50-00 | SB 80-0090 | Nov. 20/95 | Installation of Stall Warning Computer Avionics Specialties Inc. (Teledyne) P/N SLZ7778 Incorporating Software Mod. 002 |
| | SB 80-0091 | No Affected | |
| | SB 80-0092 | No Affected | |
| 27-50-00 | SB 80-0093 | May 10/96 | Flap Drive Unit P/N C136066 - Additional Scheduled Inspection |
| | SB 80-0094 | No Affected | |
| | SB 80-0096 | No Affected | |

| ATA CHAPTER | SB No. | DATE | TITLE |
|---|---|---|---|
| 24-30-00 | SB 80-0097 | Jan. 21/99 | D.C. Distribution - Overload Protection Circuit Modification |
| 34-23-00, 34-59-40 | SB 80-0098 | June 18/97 | Collins EFIS Processor - New P/N's |
| 34-51-00 | SB 80-0099 | Mar. 31/98 | Collins VIR32 Navigation Receiver - Installation of Units - 201 |
| | SB 80-0100 | No Affected | |
| | SB 80-0101 | No Affected | |
| | SB 80-0102 | No Affected | |
| | SB 80-0104 | No Affected | |
| | SB 80-0106 | No Affected | |
| | SB 80-0107 | No Affected | |
| 23 | SB 80-0112 | Dec. 05/01 | Replacement of the secondary V/UHF COMM System (Elmer Model SRT 651) with the econdary VHF COMM System (Collins Type VHF-22D) |
| | SB 80-0114 Rev.1 | No Affected | |
| 23-12-00, 23-11-00 | SB 80-0115 | Nov. 24/99 | VHF Communication Radios Capable 8.33 KHZ Channel Spacing |
| | SB 80-0116 | No Affected | |
| | SB 80-0118 | No Affected | |
| | SB 80-0119 | No Affected | |
| | SB 80-0120 | No Affected | |
| | SB 80-0121 | No Affected | |
| 28-41-00 | SB 80-0123 Rev2 | Feb. 07/07 | Wing Fuel Tank Extension |
| | SB 80-0123 Rev3 | No Affected | |
| | SB 80-0128 | No Affected | |
| | SB 80-0129 | No Affected | |
| | SB 80-0131 | No Affected | |
| | SB 80-0132 | No Affected | |
| | SB 80-0133 | No Affected | |
| 20-20-00 | SB 80-0134 | Nov. 30/04 | Romec fuel booster pump, P/N RR-54520-C replacement with Parker P/N 1C12-43 |
| 34 | SB 80-0139 | Dec. 22/08 | Installation for CAT II System Operation |
| | SB 80-0140 | No Affected | |

| ATA CHAPTER | SB No. | DATE | TITLE |
|---|---|---|---|
| | SB 80-0141 | No Affected | |
| | SB 80-0142 | No Affected | |
| | SB 80-0145 | No Affected | |
| | SB 80-0153 | No Affected | |
| | SB 80-0155 | No Affected | |
| | SB 80-0156 | No Affected | |
| | SB 80-0157 | No Affected | |
| | SB 80-0159 | No Affected | |
| 31-13-20 | SB 80-0160 | May 26/04 | Trim Switch Panel Update (Recommended) |
| 34-10-00 | SB 80-0161 Rev 1 | Mar. 15/04 | RVSM Provision (optional) page 1 |
| 34-10-00 | SB 80-0162 | Mar. 15/04 | RVSM Kit (optional) page 2 |
| 34-10-00 | SB 80-0162 Rev 1 | Mar. 15/04 | RVSM Kit (optional) page 2 |
| 34-12-00 | SB 80-0163 | Mar. 15/04 | Air Data System |
| | SB 80-0164 | No Affected | |
| | SB 80-0165 | No Affected | |
| 29-10-00, 29-30-00 | SB 80-0166 Rev1 | Mar. 15/04 | Hydraulic - Package |
| 24-63-00 | SB 80-0167 | Mar. 15/04 | Emergency Power Bus page 2 |
| | SB 80-0168 | No Affected | |
| 20-20-00 | SB 80-0169 | Dec. 19/01 | AE640 & AE641 Processor Optional Upgrade fot T-CAS |
| | SB 80-0173 | No Affected | |
| | SB 80-0174 | No Affected | |
| | SB 80-0175 | No Affected | |
| 33, 34 | SB 80-0178 | Dec. 19/08 | Taws Installation |
| | SB 80-0179 | No Affected | |
| 20-20-00 | SB 80-0180 | Giu. 13/07 | Baker Audio Panel (2 Comm) Replacement |
| 20-20-00 | SB 80-0181 | Giu. 13/07 | Baker Audio Panel (3 Comm) Replacement |
| | SB 80-0182 | No Affected | |
| | SB 80-0183 | No Affected | |
| | SB 80-0184 | No Affected | |
| 21-52-00 | SB 80-0186 | Nov. 30/04 | Enviro, control system third evaporator kit. |
| 34-10-00 | SB 80-0190 Mandatory | Mar. 15/04 | RVSM Provision (optional) page 1 RVSM Kit (optional) page 2 |

| ATA CHAPTER | SB No. | DATE | TITLE |
|---|---|---|---|
| | SB 80-0191 | No Affected | |
| | SB 80-0193 | No Affected | |
| 79-30-00 | SB 80-0194 | Mar. 15/04 | Chip_Detector |
| 21-10-00 | SB 80-0195 Mandatory | Sept 21/04 | Bleed Air Ducting Leakage Monitoring System Modification |
| | SB 80-0196 | No Affected | |
| | SB 80-0198 | No Affected | |
| | SB 80-0199 | No Affected | |
| | SB 80-0201 | No Affected | |
| | SB 80-0207 | No Affected | |
| | SB 80-0210 | No Affected | |
| | SB 80-0212 | No Affected | |
| | SB 80-0213 | No Affected | |
| | SB 80-0215 | No Affected | |
| 45-45-00, 45-60-00 | SB 80-0216 | Nov. 08/06 | Engine Monitoring Aircraft Data Acquisition System (ADAS+) and Data Transport System (DTU) Installation |
| 23-52-00 | SB 80-0217 | June 12-06 | Passenger Rear Cabin Audio Interphonic |
| 25-31-00, 31-11-10, 33-21-10, 33-22-10 | SB 80-0218 | June 08-06 | Interior Option 1, New Version |
| 34-54-21 | SB 80-0227 | July 27-07 | P180 Avanti Mode-S EHS Installation |
| | SB 80-0227 | No Affected | |
| | SB 80-0227 Rev 7 | No Affected | |
| 25 | SB 80-0242 Rev 2 | Mar. 04/08 | ELT(AF) New Typr and New Installation |
| 20-20-00 | SB 80-0243 Rev 2 | June 19/09 | Stand-By Horzon model AI-804DM alternative PN |
| 21 | SB 80-0254 | Aug. 20/09 | Freon Air Conditioning System Replacement |
| 21-52-00 | SB 80-0254 | Aug. 20/09 | Freon Air Conditioning System-Replacement N/C 1033 |
| 25 | SB 80-0255 Rev 3 | Dec. 11/09 | ELT(AF) New Typr and New Installation |
| 25 | SB 80-0255 Rev 4 | Dec. 24/08 | ELT new Type |
| 23 | SB 80-0259 | Dec. 22/08 | Cockpit Voice Recorder Installation |

| ATA CHAPTER | SB No. | DATE | TITLE |
|---|---|---|---|
| 23, 34 | SB 80-0260 | Dec. 18/08 | A/C Sn 1032 Cockpit Reconfiguration |
| 25, 33 | SB 80-0261 | Dec. 18/08 | Aircraft S/N 1032 adaptations for cabin reconfiguration |
| | SB 80-0262 | No Affected | |
| 25,33 | SB 80-0269 | Aug. 19/09 | P180 Avanti S/N 1033, Cabin Light Replacement |
| 23, 34 | SB 80-0273 | July 21/09 | A/C Sn 1033 Cockpit Reconfiguration |
| | SB 80-0282 Rev.1 | No Affected | |
| | SB 80-0287 | No Affected | |
| | SB 80-0289 | No Affected | |
| | SB 80-0291 | No Affected | |
| 24-63, | SB 80-0294 | May 19/11 | 14VDC Auxiliary Power Supply Installation. |
| | SB 80-0297 | No Affected | |
| | SB 80-0299 | No Affected | |
| | SB 80-0303 | No Affected | |
| | SB 80-0308 | No Affected | |
| | SB 80-0312 | No Affected | |
| | SB 80-0315 | No Affected | |
| | SB 80-0316 | No Affected | |
| | SB 80-0318 | No Affected | |
| | SB 80-0319 | No Affected | |
| | SB 80-0322 | No Affected | |
| | SB 80-0323 | No Affected | |
| | SB 80-0324 | No Affected | |
| | SB 80-0329 | No Affected | |
| | SB 80-0330 | No Affected | |
| | SB 80-0344 | No Affected | |

INTENTIONALLY LEFT BLANK

RECORD OF SPARE PARTS BULLETINS

| ATA CHAPTER | SPB No. | DATE | TITLE |
|---|---|---|---|
| 20-20-00 | | | Code M9-M10 L-R Ind. Fuel Q.ty New PN |
| 20-20-00 | | | Code M15-M16 Ind. Propeller rpm New PN |
| | SPB 80-0001 | NO EFFECT. | |
| | SPB 80-0002 | NO EFFECT. | |
| 27 | SPB 80-0003 | May. 10/96. | New flap drive unit |
| 27 | SPB 80-0004 | Mar. 3/97 | Horizontal stabilizer new trim actuator |
| 23 | SPB 80-0005 | Oct. 31/97 | Alternate hand microphone |
| 34 | SPB 80-0006 | Oct. 31/97 | Dual transponder control panel |
| 76 | SPB 80-0007 | NO EFFECT. | |
| 61 | SPB 80-0008 | Jul. 01/97. | Tachometer generator - New P/N. |
| | SPB 80-0009 | NO EFFECT. | |
| | SPB 80-0010 | NO EFFECT. | |
| 21 | SPB 80-0011 | Nov. 30/98 | Primary and secondary out valve new P/N. |
| 32 | SPB 80-0012 | Nov. 30/98 | Microswitch - New P/N. |
| 21 | SPB 80-0013 | NO EFFECT. | Bleed Air Duct - New P/N. |
| 79 | SPB 80-0014 | Nov. 30/98 | Engine oil system Pres. transducer new P/N. |
| 27 | SPB 80-0015 | Nov. 30/98 | Flap drive unit |
| 25 - 33 | SPB 80-0016 | Sept. 11/98 . | Circuit Controller New P/N |
| 55 | SPB 80-0017 | NO EFFECT. | Rudder - New P/N. |
| 22 | SPB 80-0018 | Mar. 30/02 | Collins autopilot computer - New P/N. |
| 21 | SPB 80-0019 | Mar. 30/02 | New Shut-off Dukes |
| 61-77 | SPB 80-0021 | Mar. 30/02 | New RPM transducer NG-NP Farem |
| | SPB 80-0022 | NO EFFECT | |
| 20-20-00 | SPB 80-0024 | Mar. 30/02 | Master Annunciator |
| 20-20-00 | SPB 80-0025 | Mar. 01/06 | Code E54 Aural Warning Box New PN |
| 20-20-00 | SPB 80-0026 | Mar. 01/06 | Code E51 Control Lever Flap New PN |
| 20-20-00 | SPB 80-0027 | Mar. 01/06 | Code E92 AC Control Unit New PN |

| ATA CHAPTER | SPB No. | DATE | TITLE |
|---|---|---|---|
| 20-20-00 | SPB 80-0028 | Mar. 01/06 | Code E47 Gound RFL/TEST PNL New PN |
| 20-20-00 | SPB 80-0029 | Mar. 01/06 | Code E5 ( Annunciator Panel ) New PN |
| 27 | SPB 80-0031 | Mar. 30/02 | Main wing flap screw jack actuators. |
| 31 | SPB 80-0032 | Mar. 30/02 | New V.S.I. Thommen. |
| 31 | SPB 80-0033 | Mar. 30/02 | New Mach/airspeed indicator Thommen |
| 20-20-00 | SPB 80-0035 | Mar. 01/06 | Code TR607 AERIAL-RCVR RDR New PN |
| | SPB 80-0036 | NO EFFECT | |
| | SPB 80-0037 | NO EFFECT | |
| | SPB 80-0038 | NO EFFECT | |
| 31-34 | SPB 80-0039 | Mar. 30/02 | New altimeter |
| | SPB 80-0041 | NO EFFECT | |
| 34 | SPB 80-0047 | Mar. 30/02 | New control adapter collins CAD-62. |
| 20-20-00 | SPB 80-0050 | Mar. 01/06 | Code M52 Trim Indicator New PN |
| 20-20-00 | SPB 80-0051 | Mar. 01/06 | Code M21 Indicator 4 Flap position New PN |
| 20-20-00 | SPB 80-0052 | Mar. 01/06 | Code MT13-MT14 L-R Ind. Torque New PN |
| 20-20-00 | SPB 80-0052 | Mar. 01/06 | Code MT11-MT12 L-R Ind. Temp New PN |
| 20-20-00 | SPB 80-0052 | Mar. 01/06 | Code MT5-MT6 L-R Ind. Fuel Flow New PN |
| 20-20-00 | SPB 80-0052 | Mar. 01/06 | Code M7-M8 press/temp Indicator. New PN |
| 20-20-00 | SPB 80-0054 | Mar. 01/06 | Code S154 Pressure Switch New PN |
| 20-20-00 | SPB 80-0055 | Mar. 01/06 | Code S156 Pressure Switch New PN |
| 20-20-00 | SPB 80-0060 | Mar. 01/06 | Code B3-B5 Stby Boost Pump New PN |
| 20-20-00 | SPB 80-0060 | Mar. 01/06 | Code B4-B6 Stby Boost Pump New PN |
| 20-20-00 | SPB 80-0089 | May.12/11 | Alternative P/N for Trasducer MT37,MT38 |

# INTRODUCTION

## 1. Scope of the Manual

A. This Wiring Manual has been prepared by the Technical Publications Department of Piaggio Aero Industries S.p.A. and is designated Report No. 180-MAN-0150- 01104 within the company.
The manual is compiled in accordance with Specification 100 of the Air Transport Association (ATA) of America. The specification is commonly referred to as ATA100.

B. The manual provides information to enable qualified maintenance persons to troubleshoot, test and service the airplane electrical and avionic systems. The information is given in the form of:

- an Equipment List which gives the alpha -numeric Piaggio code number of the piece of equipment, its nomenclature, it s airplane zone location and its ATA chapter-section-subject reference within the manual
- a Code to Part Number List so that, when only the code number of a piece of equipment is known, its manufacturer's part number or military specification (MS) number can be readily referenced
- a Connectors List which gives the alpha -numeric Piaggio code number of the connector, its specific nomenclature, its airplane zone location and its ATA chapter-section-subject reference within the manual. Note that all receptacles (J codes) and plugs (P codes) are called connectors to comply with nomenclatures in associated manuals
- Standard Practices for the general ma intenance and repair of the airplane wiring
- Wiring diagrams of the airplane electrical and avionic systems

  **NOTE:** To facilitate locating components and tracing the circuitry of individual diagrams, each wire is identified by the wire code it bears in the aircraft. The individual circuit components are identified by an equipment code. The diagrams show the terminals, wire numbers, switches, etc., in a manner which will make the operation of each component easily understandable. The circuits are shown consistent with the position of switches and conditions noted on the diagrams.

- Schematic Diagrams where required to expand upon the information given on the wiring diagrams.

C. Information beyond the scope of the Wiring Manual may be found in these manuals:

- Maintenance Manual (MM)
- Illustrated Parts Catalog (IPC)
- Component Maintenance Manuals (CMMs).
  These manuals are all dispatched to operators by Piaggio Aero Industries S.p.A. Full support services are available for all publications issued by Piaggio.

2. Manual Chapterization

A. The Wiring Manual is divided into groups and chapters as follows:

Group B - Airframe Systems

| Chapter | Title |
|---|---|
| 21 | Air Conditioning |
| 22 | Autoflight |
| 23 | Communications |
| 24 | Electrical Power |
| 25 | Equipment/Furnishings |
| 26 | Fire Protection |
| 27 | Flight Controls |
| 28 | Fuel |
| 29 | Hydraulic Power |
| 30 | Ice and Rain Protection |
| 31 | Indicating/Recording system |
| 32 | Landing Gear |
| 33 | Lights |
| 34 | Navigation |
| 35 | Oxygen |
| 45 | Central Maintenance System |

Group C - Structures

| Chapter | Title |
|---|---|
| 52 | Doors |

Group D - Propellers

| Chapter | Title |
|---|---|
| 61 | Propellers |

Group E - Power Plant

| Chapter | Title |
|---|---|
| 73 | Engine fuel and control |
| 77 | Engine indicating |
| 79 | Oil |

Group F - Charts

| Chapter | Title |
|---|---|
| 93 | Surveillance |

3. Chapter Breakdown

A. The chapter numbering system is a conventional dash-number breakdown consisting of three two-digit elements separated by dashes. The elements are explained in the following examples:

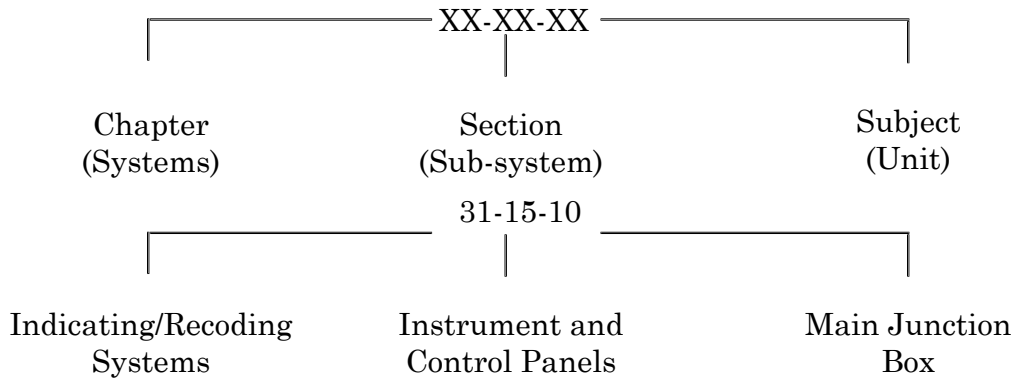


B. Whenever the section applies to all of the chapter, the second element will be a double zero; and if the subject applies to all of the section the third element will be a double zero.

C. Page numbering within chapters, except for Chapter 20, is as follows:
Page Block 1 (pages 1 thru 99) - Wiring Diagrams
Page Block 101 (pages 101 thru 199) - Schematic Diagrams
In Chapter 20, page numbering is as follows:
Page Block 1 (pages 1 thru 99) - Informative Text (Lists, etc.)
Page Block 201 (pages 201 thru 299) - Maintenance Practice
Typical page idenfication:

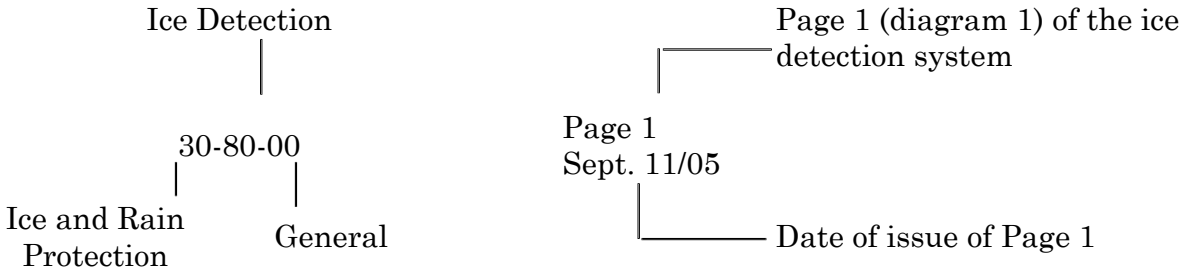


D. If it is necessary to divide a diagram, each part of the diagram is given a sheet number which is shown immediately above the page number.

4. Revisions

Regular Revisions

From time to time it may be necessary for the manufacturer to amend, add or delete information and instructions within the manual to improve the safe and efficient operation of the airplane. The manual is therefore revised whenever considered necessary. A Record of Revisions is provided at the front of this manual and the operator (manual user) is advised to make sure that the record is kept up-to- date.

Publications are assigned a revision code which appears on the title page and consists for the basic publication of the letter "A" and the number "0"; subsequent revisions are identified by the change of the code from "A0" to "A1" for the first revision to the basic publication, "A2" for the second one, etc. If it is necessary to completely reissue a publication owing to the extent of content and format changes, the code will change to the next successive letter of the alphabet at each new issue (for example, B for the first reissue, C for the second reissue, etc.).

A. Temporary Revisions

Information and instructions necessary for inclusion in the manual between regular revisions will be issued through a Temporary Revision (TR) Service. TR's are printed on yellow paper and are numbered consecutively within each chapter; for example 001, 002 etc.,
Normally, the information contained in a TR is incorporated into the manual at the next regular revision, thereby becoming a permanent part of the manual.
A Record of Temporary Revisions (ROTR) is provided at the front of the manual, and gives information regarding the TR number, its location in the manual, the date of issue and, where applicable, the date and number of the regular revision or new TR which instructs its removal.
The Record of Temporary Revisions is updated and re-issued with a regular revision when appropriate. The operator (manual user) is advised to keep the record up-to-date between reissues.

B. Filing of Revisions

(1) Regular Revisions

Each copy of a regular revision to the manual will be accompanied by an attached Letter of Transmittal advising the manual holder of the method for incorporating the revision into the manual. The Letter of Transmittal will include revision highlight pages which will give a summary of the reasons for revision/ addition/deletion of text or illustrations.

If a regular revision contains the information/instructions given in a Temporary Revision, the Letter of Transmittal will contain an instruction to remove the Temporary Revision concerned.

(2) Temporary Revisions

Filing instructions for a TR are given on the title page of the TR.

A TR should be removed from the manual only when an Instruction to do so is given by the Letter of Transmittal of a regular revision or on the title page of a superseding TR.

C. Revision Symbols

Additions, deletions and revisions to existing text will be identified by a revision bar (black line) in the margin of the page, adjacent to the change.

When technical changes cause expansion or deletion of text which results in unchanged text appearing on a different page, a revision bar will be placed in the margin adjacent to the page number of all affected pages providing no other revision bar appears on the page. These pages will be updated to the current regular revision date.

When extensive technical changes are made to existing text, resulting in complete retype of copy, a single revision bar will appear the full length of the text.

5. List of Effective Pages

A List of Effective Pages (LOEP) is provided at the beginning of each chapter. All pages in the chapter are listed in sequence, together with the latest date of issue/ revision of each page.

6. Table of Contents

Each chapter is provided with a page entitled CONTENTS, which lists the contents of the chapter, enabling the manual user to locate information quickly. The page is updated and reissued with regular revisions when appropriate.

7. Effectivity

When the information on a particular page applies to a specific airplane or airplanes, the manufacturer's serial number of the airplane(s ) is given in the effectivity space at the lower left hand corner of the page. Where the space is left blank, the information applies to all airplanes.

8. Abbreviations

The following is a list of the abbreviations used throughout this manual..

A/COLL = Anticollision

A/I = Anti Ice
A/P = Autopilot
ADPR = Adapter
ADV = Advisory
ALTM = Altimeter
ANN = Annunciator
AOA = Angle of Attack
AR = As Required
AU/FTR = Autofeather
AVCS = Avionics
BAG = Baggage
BETW = Between
BST = Boost(er)
C/B = Circuit Breaker
C/F = Crossfeed
CAB = Cabin
CKPT = Cockpit
CMND = Command
COM = Communication
COOL = Cooling
CPLT = Copilot
CSL = Console
CTCTR = Contactor
CTRL = Control
CW = Control Wheel
DN = Down
ECS = Environmental Control System
EMER = Emergency
ENG = Engine
EQP = Equipment
FLT COMP = Flight Compartment
FS = Fuselage Station
FWD = Forward
GEN = Generator
GND = Ground
GS = Glide Slop
FUSLG = FUSELAGE
HDG = Heading
HI = High
HTR = Heater
HYD = Hydraulic
IGN = Ignition
INB = Inboard
INSP = Inspection
INTCHG = Interchangeable
ITT = Inter Turbine Temperatu
L(H) = Left (hand)

LDG = Landing
LO = Low
LONG = Longitudinal
LT = Light
LTS = Lights
LVR = Lever
LWR = Lower
MAN = Manual
MIC = Microphone
MKR = Marker
MLG = Main Landing Gear
NG = Gas Generator Speed
NAV = Navigation
NP = Number Propeller Spee
NLG = Nose Landing Gear
OAT = Outside Air Temperature
OPR = Operator
OPT = Option
OUTB = Outboard
OVSP = Overspeed
OVV = Overvoltage
OX = Oxygen
P/O = Part of
P/UP = Pickup
PAX = Passenge
PCL = Power Control Lever
PLT = Pilot
PNL = Panel
POS = Position
PRESS = Pressure
PRI = Primary
PROP = Propeller
PSU = Passengers Service Unit
PWR = Power
QT = Quantity
R(H) = Right (hand)
RAD = Radio
RCCB = Remote Control Circuit Breaker
RCDR = Recorder
RCV = Receiver
REC = Recognition
RDR = Radar
S/O = Shut off
SEC = Secondary
SEL = Selector
SPC = Software Programmable Controller
SPLY = Supply

STAB = Stabilizer
STBY = Standby
STL = Stall
STR = Steering
SW = Switch
SYNCPH = Synchrophaser
SYST = System
TBD = To be determined
TEMP = Temperatur
TQ = Torqu
UPR = Upper
VERT = Vertical
WRN = Warning
WS = Wing Station
WSHLD = Windshield
WT = Weight
XCV = Transceiver
XMT = Transmitter
XPND = Transponder

CHAPTER 20 - STANDARD PRACTICES - AIRFRAME
LIST OF EFFECTIVE PAGES

| CHAPTER SECTION SUBJECT | PAGE | DATE |
|---|---|---|
| 20-LOEP | 1 | June 30/10 |
| | 2 | June 30/10 |
| 20-TOC | 1 | June 30/10 |
| | 2 | June 30/10 |
| 20-00-00 | 1 | Oct. 30/09 |
| | 1 | Oct. 30/09 |
| | 201 | Oct. 30/09 |
| | 201 | Oct. 30/09 |
| | 202 | Oct. 30/09 |
| | 203 | Oct. 30/09 |
| | 207 | Oct. 30/09 |
| | 209 | Oct. 30/09 |
| | 210 | Oct. 30/09 |
| | 210 | Oct. 30/09 |
| | 217 | Oct. 30/09 |
| | 218 | Oct. 30/09 |
| | 218 | Oct. 30/09 |
| | 218 | Oct. 30/09 |
| | 219 | Oct. 30/09 |
| | 219 | Oct. 30/09 |
| | 219 | Oct. 30/09 |
| | 219 | Oct. 30/09 |
| | 220 | Oct. 30/09 |
| | 220 | Oct. 30/09 |
| | 221 | Oct. 30/09 |
| | 221 | Oct. 30/09 |
| | 222 | Oct. 30/09 |
| 20-10-00 | All Pages | June 30/10 |
| 20-20-00 | All Pages | June 30/10 |
| 20-30-00 | All Pages | June 30/10 |

INTENTIONALLY LEFT BLANK

CHAPTER 20 - STANDARD PRACTICES - AIRFRAME
TABLE OF CONTENTS


| SUBJECT | CHAPTER SECTION SUBJECT | PAGE |
|---|---|---|
| STANDARD PRACTICES - WIRING | 20-00-00 | 1 |
| General | | 1 |
| Wire Codes | | 1 |
| MAINTENANCE PRACTICES - WIRING 201 | 20-00-00 | 201 |
| General | | 201 |
| Wire Repairs | | 201 |
| Removal/Installation of Wires | | 202 |
| Binding of Wire Groups, Sleeves and Tape (Ref. Fig. | | 203 |
| Bonding Requirements | | 207 |
| Typical Bonding Methods | | 209 |
| Bonding Surface Preparation | | 210 |
| Surface Finish | | 210 |
| Wiring Installation Requirements | | 217 |
| Wiring Replacement or Repair | | 218 |
| Terminals and Terminal Block | | 218 |
| Fuses and Fuse Holders | | 218 |
| Connectors | | 219 |
| Splices | | 219 |
| Junction Boxes | | 219 |
| Bonds | | 219 |
| Switches | | 220 |
| Circuit Breakers | | 220 |
| Diodes and Transistors (Semiconductors) | | 221 |
| Resistors | | 221 |
| Relays | | 222 |
| EQUIPMENT - ALPHANUMERIC LIST | 20-10-00 | 1 |
| General | | 1 |
| Equipment List | | 1 |
| CROSS REFERENCE LIST | 20-20-00 | 1 |
| General | | 1 |
| Code to Part Number List | | 1 |
| Part Number to Code List | | 38 |
| CONNECTORS - ALPHANUMERIC LIST | 20-30-00 | 1 |
| General | | 1 |
| Connectors List | | 1 |

INTENTIONALLY LEFT BLANK

# STANDARD PRACTICES - WIRING

## 1. General

A. This chapter gives general information as follows:

- wire codes (refer to Para. 2)
- wiring repairs (refer to Para. 3)
- electrical/avionic equipment alphanumeric lists (refer to 20-10-00)
- cross reference list (refer to 20-20-00)
- connector alphanumeric list (refer to 20-30-00).

**NOTES:**

(1) wire routing identification and clamping conforms to MIL-W-5088K.

(2) Wires are connected to terminals, connectors, components, etc. in the same position as shown diagramatically.

(3) The wiring diagrams in this manual are shown with airplane power off, control surfaces streamlined, and weight on the landing gear; any deviation from the preceding conditions are so noted on the individual sheets.

(4) All connectors are shown from the back of the connector.

(5) All non-shielded stranded wires conform to MIL-W--22759D.

(6) All shielded stranded wires conform to MIL-C-27500E.

## 2. Wire Codes

A. The wire codes used in the airplane and shown on the wiring diagrams are in accordance with the military alphanumeric identification system. Each wire and cable is marked with a combination of le tters and numbers which makes it possible to identify the particular wire or cable in accordance with the following example:

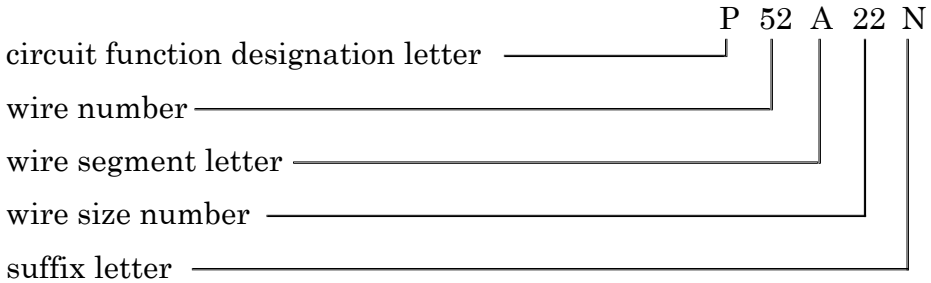


Each wire or cable is marked at a locati on within 3 inches of its attachment to another component (terminal block, switch, et c.). Wires or cables less than 3 inches long are not marked. When the wire itse lf cannot be marked a non-metallic sleeve bearing the wires identity code is placed over the wire before attachment.

The circuit function designation letters are:

| | |
|---|---|
| A | Not used |
| B | Not used |
| C | Flight C ontrol S ystems |
| CA | Auto Flight System |
| D, DH | Central Warning System, Air Conditioner |
| E | Engine and Propeller Indication, Fuel Quantity, Flow and Pressure, Emergency Locator Transmitter |
| F | Flight Instruments, Stall Warning, Pitot-Static and AOA Vane Heating |
| FA | Flight Environment Data |
| FD | Flight Directors and EFIS Cooling Fans |
| FH | Attitude and Direction |
| G | Landing Gear Extension, Retraction and Warning, Hydraulic Control and Indication, Nose-Wheel Steering |
| H | Heating, Cooling, Ventilation, Anti-ice and De-ice |
| I | Not used |
| J | Not used |
| K | Autofeather, Propeller Synchrophaser |
| L | Lights |
| M | Miscellaneous Electrics (Clock, Oxygen Control, etc.) |
| MP | Turn and Slip |
| N | Not used |
| O | Not used |
| P | DC Power Distribution |
| Q | Fuel and Oil Systems |
| R | Communications (General) |
| RD | Automatic Direction Finder |
| RN | Marker Beacon |
| RV | Speech Communication |
| RZ | Audio Integrating |
| S | Navigation (General) |
| SA | Radio Altimeter |

| | |
|---|---|
| SN | Dependent Position Determining |
| SW | Independent Position |
| SX | Transponders |
| T | Not Used |
| U | Avionics f ans |
| V | Not used |
| W | Warning and Emergency Systems |
| X | AC Power Distribution |
| Y | Not used |
| Z | Not used |

**NOTE:** In the following two paragraphs (B. and C.) the wiring examples information was extracted from the "DC Power and Start" wiring diagram (24-30-00, Page 1, Sheets 1, 2 and 3).

B. The number after the circuit function letter is used to Differentiate between the different wires of the same circuit function designation letter. For example, P52 is a two-segment wire (P52A22 and P52B22) which connectes Pin Z of the RH generator control unit (code E2) to Pin P of the fuel control panel (code E22). P70 is a five-segment wire (P70A22 thru P70E20) which connects Pin C of the Multi-Function Display Indicator (code M1) to Pin 2 of shunt R2. Note that the segments C, D and E of P70 are inside the main junction box (code E4).

C. The letter which follows the wire number is the segment of the wire, and follows an alphabetical sequence. A segment is defined as a single length of wire between two terminals/connections. The first segment of a wire (segment A) is normally that which connects the power source to the first terminal/connection of the circuit; segment B is the segment from the first terminal/connector to the next, and so on. For example, P52A22 is the segment from Pin Z of the RH generator control unit (code E2) to Pin N of connector P30; P52B 22 is the segment from Pin N of connector J30 to Pin P of the fuel control panel (code E22).

D. The number which follows the segment letter is the wire size number.

E The suffix letter N is used to denote that the wire segment connects to ground.

F Thermocouple wires are denoted by the suffix letters CR (chromel) or AL (alumel) as appropriate. CR wires are colored yellow, AL wires are red.

INTENTIONALLY LEFT BLANK

MAINTENANCE PRACTICES - WIRING

1. General

A. This page block gives general information about the maintenance and repair of electrical wires and to supply with instructions for conducting inspection of airplane electrical system wiring and integral interconnecting components, and to point out the conditions that are to be checked. Compliance with these instructions will be effective in reducing the possibility of system(s) and/or electrical malfunctions.

B. When possible replace any damaged wire with a new piece of wire. Replacement wires must be the size and type specified in this Manual. If wire damage is limited to the outer cover only, they can be repaired as follows.

**CAUTION:** DO NOT SPLICE, SOLDER OR TAPE WIRE UNLESS YOU ARE SURE THAT IT WILL NOT AFFECT THE SYSTEM OPERATION. IF THE EXACT SPECIFICATION OF WIRE IS NOT AVAILABLE DO NOT USE A DIFFERENT SPECIFICATION. BURNT WIRE OR SYSTEM FAILURE CAN OCCUR.

2. Wire Repairs

A. Braided Nylon Insulated Wire

(1) Clean the damaged area with aliphatic naphta.
(2) Lay damaged and loose nylon braiding as evenly as possible over the damaged area.
(3) Put vinyl tape around the wire making sure that the layers of tape overlap by 1/2 the tape width. The layer of tape must cover the damage and extend a further 1/2 inch each side of the damaged area.
(4) Tie both ends of the tape with nylon cord and apply a thin layer of clear laquer to the knots.
(5) For small gage wires it is only necessary to use the vinyl tape.

B. Chromel - Alumel Thermocouple Wire (Ref. Fig. 201)

(1) Clean the damaged area with aliphatic naphta.
(2) Lay damaged fiberglass covering as evenly as possible over the damaged area.
(3) Put a double layer of glass fabric tape (Permacel EE - 3343) around the damaged area making sure that the tape overlaps by 1/2 the tape width. The layer of tape must extend at least one inch each side of the damaged area. The maximum repair area must be no more than 3 ½ inches.
(4) Use a heat gun or lamp to cure the tape for 30 minutes at a temperature of 320°F (160°C). Use a sheet of flame resistant tessue to stop overheating of adjacent wires.
(5) The ends of the outer insulation which have been cut for installation must be tied with cord as shown in figure 201.

C. Splicing Electrical Wires (Ref. Fig. 202)

**NOTE:** Use only approved splice barrels and crimping equipment.

(1) Remove the insulation from the wire so that the uninsulated wire fits exactly into the splice barrel.
(2) If the splice does not have an integral insulation sleeve put an insulating sleeve over the wire end.
(3) Install the splice barrel onto the wire end and use approved crimping equipment to crimp the splice.
(4) Put the insulating sleeve over the splice and attach it to the splice.

**NOTE:** If a loose sleeve is used tie the ends. If a heat shrink sleeve is used apply heat to the sleeve to shrink it onto the splice.

D. Installation of Terminal Connectors (Ref. Fig. 202)

(1) Remove the insulation from the wire so that the uninsulated wire fits exactly into the terminal barrel.

**NOTE:** Make sure the wire does not come out of the barrel far enough to touch the terminal post or bolts, nuts and washers used for installation.

(2) If the terminal does not have integral insulation put an insulating sleeve over the wire.
(3) Use crimping equipment supplied by the terminal manufacturer to attach the terminal to the wire.
(4) Tie or heat shrink the insu lating sleeve to the terminal.

3. Removal/Installation of Wires

A. General procedures for the installation of wires in a bundle are as follows:

(1) Replace wires with the same wire specification given in the wiring manual.

(2) When you replace a wire or when an existing wire is allocated to a different function the wire must be given a new identification label.
(3) Make sure you install the wire with no crossovers, twists or kinks.
(4) Do not attach wiring to tubes which contain flammable fluids or oxygen. Support the wires above and away from tubing with approved clamps.
(5) Protect wires from contamination by fluids in areas where fluid can be trapped.
(6) Keep wires away from high temperature areas or protect them from the effects of heat.
(7) Install grommets or pressure seals where wires go through cutouts or holes in the airplane structure before you install the wires.
(8) If you remove a wire from a pressure seal and do not replace it install nylon filler rods to stop leaks.
(9) Lubricate the wires with a small amount of petrolatum before you push them through pressure seals.

(10) Make sure that the wire is long enough for the following:
- To install terminal fittings
- To give free movement to equipment which is installed on shock mounts.
- To stop strain on wi ring and wire supports.

To give enough movement in the wire to make drip and service loops.

**CAUTION:** DO NOT CHANGE THE LENGTH OF CO-AXIAL CABLE ASSEMBLIES FOR EASE OF INSTALLATION. COAXIAL CABLES MUST BE A FIXED LENGTH FOR CORRECT OPERATION OF ELECTRONIC EQUIPMENT.

(11) Make drip loops so that fluid which falls from the loop will not fall onto equipment. When moisture resistant connectors are installed drip loops are not necessary.

(12) Keep the minimum bend radius for wires to 10 times the outside diameter of the wire.

4. Binding of Wire Groups, Sleeves and Tape (Ref. Fig. 203)

A. Tie wire groups or bundles at intervals of not more than 12 inches. Insulation sleeves and identification sleeves must be tied at each end approximately 1/4 inch from the end of the sleeve. Ties must not be made so that the cord will cut the sleeve or the wire insulation. Never use the cord to attach a wire bundle to a support.

**NOTE:** If heat shrink insulation tubing is used it is not necessary to tie the ends.

B. In areas where the operating temperature is 200°F (93.3°C) or less ties can be made with waxed twine. In areas with a temperature of more than 200°F (93.3°C) make the ties with fiberglass cord. Make ti es with a clove hitch tied with a square knot as shown in figure 203. Apply clear laquer to seal the knots.

C. In certain applications plastic tie wraps (cable ties) can be used in place of twine ties.

D. Attach wire bundles to structural members or support brackets with suitable cable clamps. Figure 204. shows a typical application.

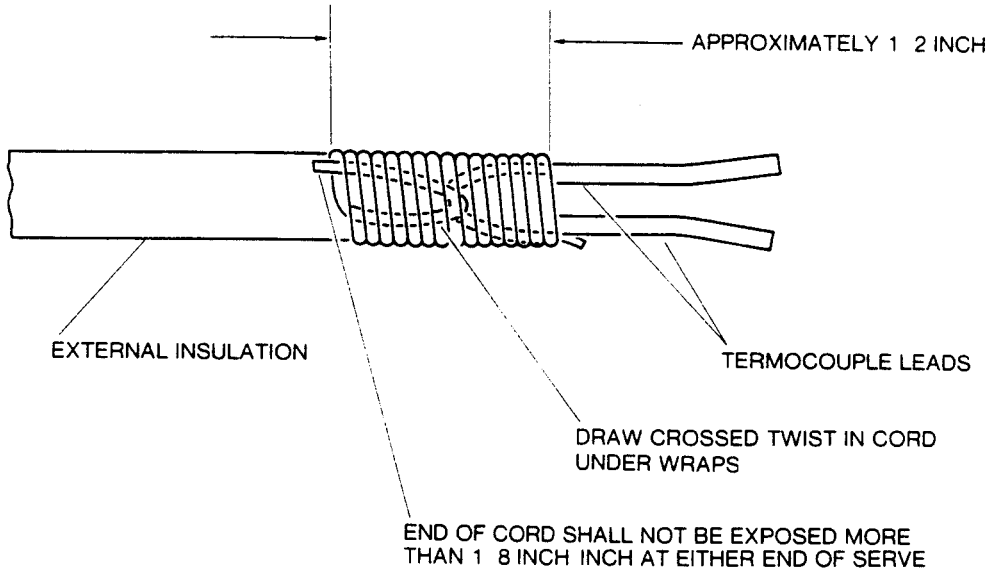


MM_202001-201

Fig. 201 - Thermocouple Leads - Maintenance Practices

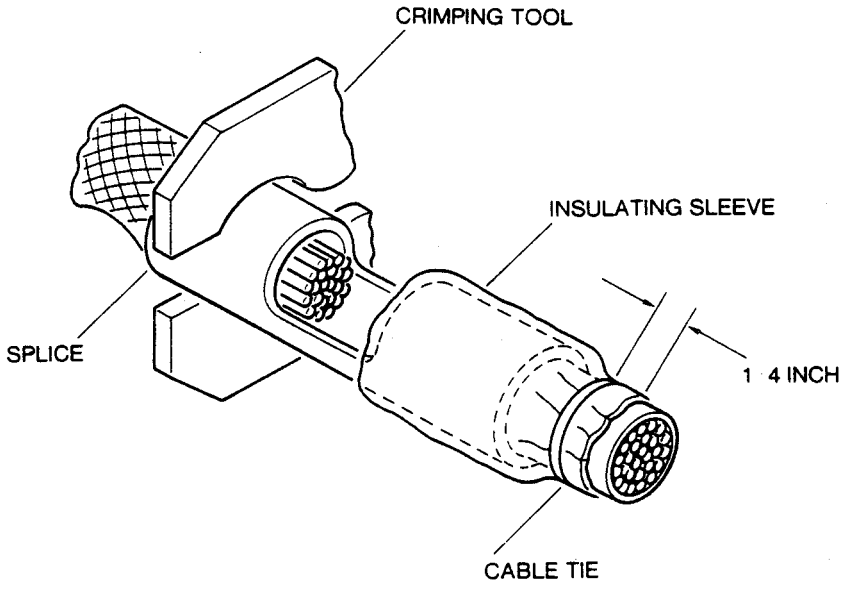


MM_202001-202

Fig. 202 - Electrical Wire - Splice Joint

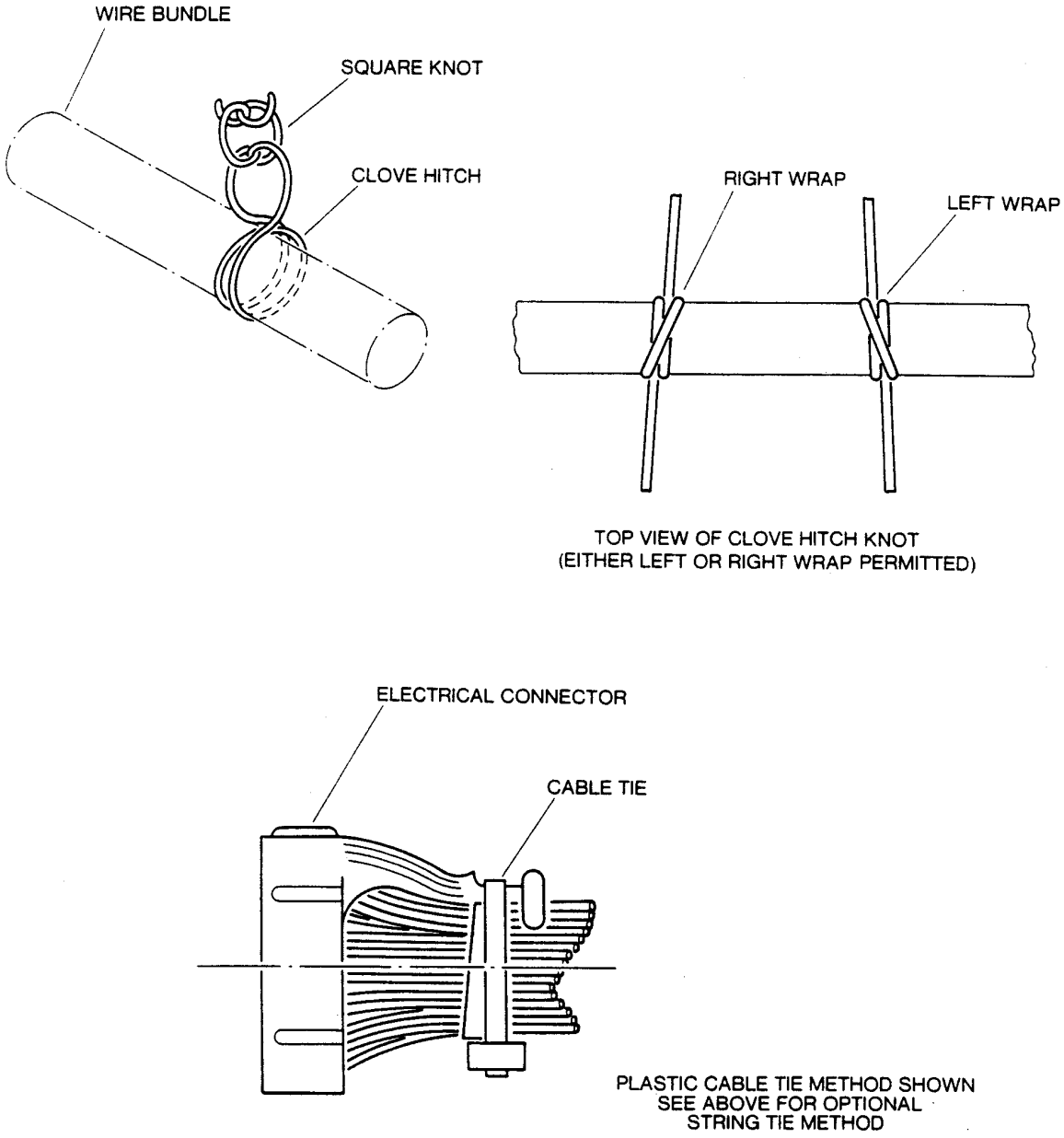


Fig. 203 - Binding Ties - Installation

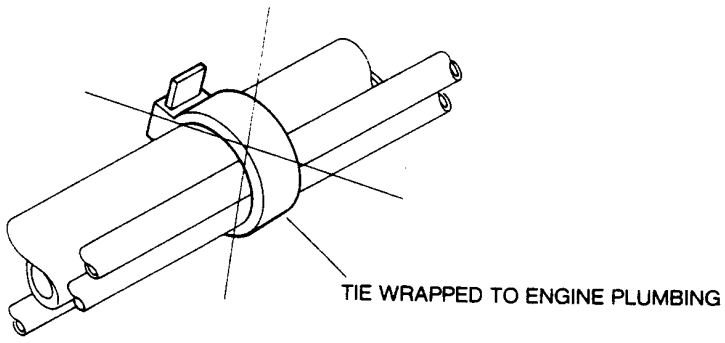


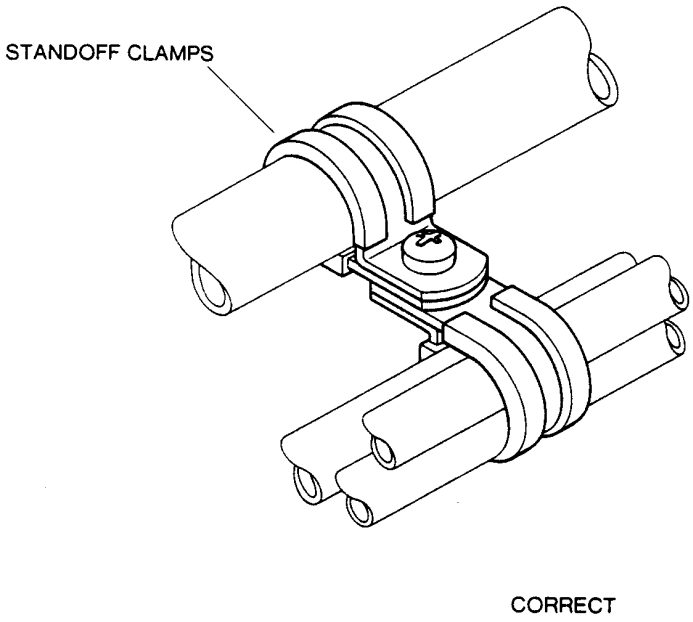


MM_202001-204

Fig. 204 - Cable Clamps - Installation

5. Bonding Requirements

A. Current path return bonds

(1) Current path return bonding completes the ground return path to the battery and the airplane generator source for all electrical and avionic equipment. The bond is made with standard airplane wire. The bond must be made to primary structure only. When equipment is case -grounded, current return can be done by direct bonding of mating surfaces and through the mounting hardware.

(2) Resistance values for different component groups are given in Table 201 below. These values do not supersede values given in individual page blocks. If any installation does not agree with the maximum values given by direct surface bonding a bonding jumper mustbe installed.

| Equipment to be Bonded | Maximum Allowable Resistance Value(Ohms) |
|---|---|
| Starter-Generator to Engine Frame | 0.0025 |
| All Electrical and Electronic Equipment Ground Return to Primary Structure | 0.0025 |
| Battery Box to Primary Structure | 0.0025 |
| Engine to Nacelle Structure | 0.0025 |
| Radio Racks and Shelves to Primary Structure | 0.0025 |
| Wing to Fuselage Primary Structure | 0.0025 |
| Rivet Sk in Joints and Breaks | 0.003 Across Joint |
| Structural Joints or Breaks | 0.003 Across Joint |
| RF1 Noise Filter | 0.0025 Across Joint |

Table 201 - Current Path Return Bonds

B. RF and Static Bonds

(1) All electrical and electronic equipment and/or components must be installed with a continuous low resistance path from the equipment mounting structure to the airplane primary structure.
(2) All metallic pipes, tubes and hoses in fluid systems must be bonded to the basic structure.
(3) Resistance values for typical equipmen t and areas for RF static bonding are given in Table 202 below.

| Equipment to be Bonded | Maximum Allowable Resistance Value(Ohms) |
|---|---|
| Antenna Base | 0.010 |
| Nosegear Doors | 0.005 |
| Maingear Doors | 0.005 |
| Baggage Compartment Doors | 0.005 |
| Control Surfaces | – |
| Aileron | 0.005 |
| Rudder | 0.0025 |
| Elevator | 0.005 |
| Trim Tabs | 0.005 |
| Flaps | 0.005 |
| Removable Cowls (Fastener Mounting) | 0.005 |
| Access and Inspection Panels | 0.005 |
| Nacelle | 0.0025 |
| Static Wicks | 0.0005 |
| Honeycomb Panel Assemblies | 0.005 |

Table 202 - RF and Static Bonds

(4) All control surfaces and flaps must have a bonding jumper across each hinge. A piano type hinge does not require addi tional bonding if the bond across the hinge is inside the limit.

C. General precautions for bonding are as follows:

(1) Bonded connections must be in a protected area close to access panels or doors for ease of installation.
(2) Do not bond components to the structure through other parts. Always bond direct to the structure.
(3) Make sure the leads are as short as possible.
(4) Make sure the leads do not stop correct operation of moving parts.
(5) Clean all bonding surfaces before installation of the joint.
(6) Use only self locking nuts in bonded joints.

(7) Do not make RF current return s through magnesium alloy parts.
(8) Do not use soldered joints on parts that move or vibrate.
(9) Bonding attachments must not affect the integrity of the airframe structure.
(10) Non-metallic or dry film lubricated nutplates must not be used for bonding applications e.g. antenna installation.
(11) AC and DC electrical ground returns must be connected separately.
(12) Where possible multiple bonding or dual system grounds to the same point on the structure are not possible.

6. Typical Bonding Methods

A. The bonding methods that follow will in most applications make a bonding joint which will agree with the limits in the Tables above:

(1) Bolted bond jumper installation

(a) Make bolted installa tions as shown in Fig. 205 and 206. Make the connections with the types of screw shown unless specifically told otherwise in a maintenance procedure.

(2) Riveted or bolted skin bond

(a) Normally a riveted or bolted skin jo int will be inside the limits given above.
(b) If the normal joint bond is not in the limit the procedure given in Fig. 207 and 208 will give a satisfactory bond.

(3) Riveted or bolted angle bond

(a) Normally a riveted or bolted angle joint will be inside the limits given below:
– Normal resistance value across the joint less than 0.005 ohms
– Resistance for a current return path of less than 0.0025 ohms
(b) If the resistance value is not in the limit the procedure given in Fig. 209 will give a satisfactory bond.
(c) An alternative method to (b) above is to install bonding jumpers between each secondary structure and the primary structure.

(4) Bonding of tubes

(a) Normally a correctly installed tube with correct clamping arrangements will be inside the limit above.
(b) If the resistance value is above the limit given use one or more of the methods given in Fig. 210 and 211 to give a satisfactory bond.

(5) Bonding of access panels

(a) Normally a correctly installed panel will be inside the limit given in Table 202 above.
(b) If the resistance value is more than the limit use one of the two methods given in Fig. 212 and 213 to give a satisfactory bond.

(6) Bonding of antenna installations

(a) Normally a correctly installed antenna will be inside the limit given in Table 202 above..
(b) If the resistance value is more than the limit use one of the methods that follow to give a satisfactory bond:

1) Make sure that all mating surfaces of the antenna mounting are clean and free from paint and insulating material.
2) Use the methods given in Figs. 205, 206 and 214 to give a satisfactory bond. 205, 206 and 214 to give a satisfactory bond.

7. Bonding Surface Preparation

A. Make sure that all mating surfaces which affect the electrical bonding are clean and free from corrosion.

B. Clean steel and aluminum surfaces as follows:

- Remove heavy to mild deposits with 40 0 - 600 grade emery cloth or equivalent sand paper
- Remove mild or medium de posits with abrasive pads
- For mild deposits on steel surfaces us e aluminum oxide, paper or cloth, steel wool or a steel or monel wire brush
- Use aluminium wool on aluminum surfaces only
- Clean with solvent (MEK) and a lint free cloth.

C. Clean magnesium surfaces as follows:

**CAUTION** DO NOT USE STEEL WOOL, STAINLESS STEEL WOOL OR ALUMINUM WOOL TO CLEAN MAGNESIUM ALLOYS. PARTICLES OF THESE PRODUCTS CAN CAUSE CORROSION OF THE ALLOYS.

- Remove deposits with abrasive pads (Plastic)
- Remove heavy deposits with a stai nless steel or monel wire brush
- Remove medium to mild deposits wi th 400 - 600 grade emery cloth or an equivalent fine sandpaper and/or aluminum oxide paper or cloth.
- Clean the areas with solvent (MEK) and a lint free cloth.

8. Surface Finish

A. Replace all surface finish in accordance with the instructions given in Chapter 51 of the Airplane Maintenance Manual.

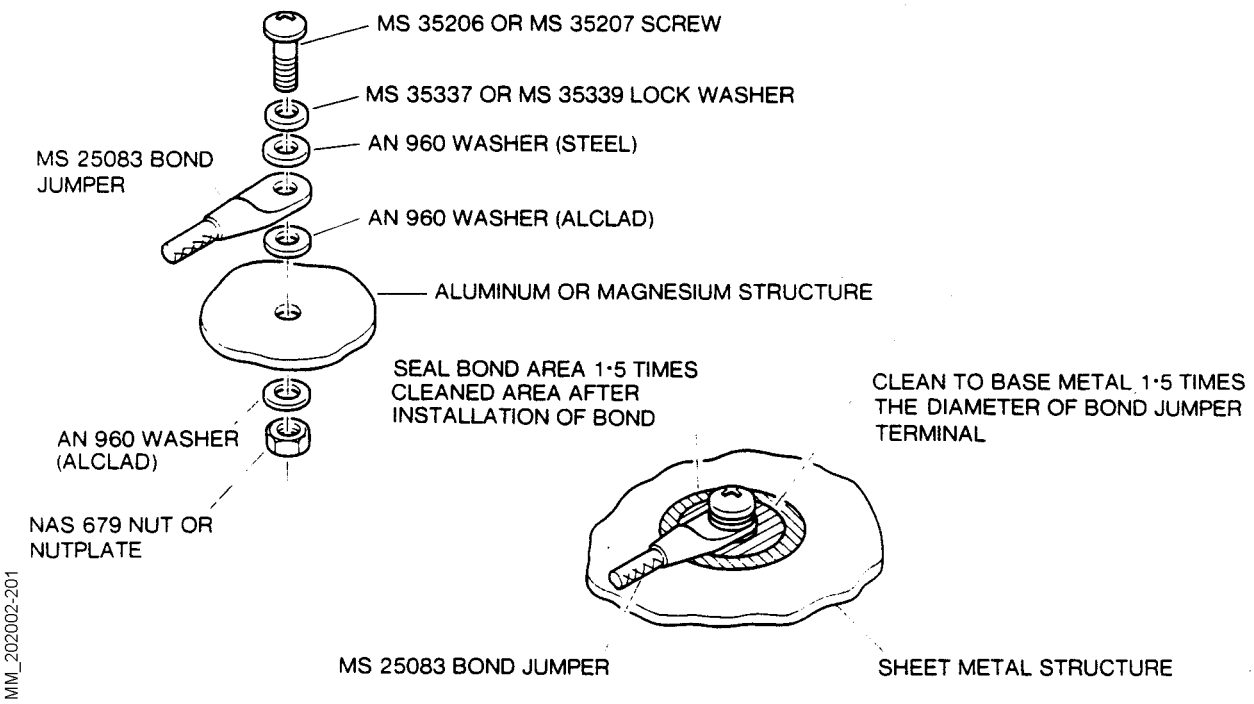


Fig. 205 - Bonding Jumper Installation - Aluminum and Magnesium Alloys

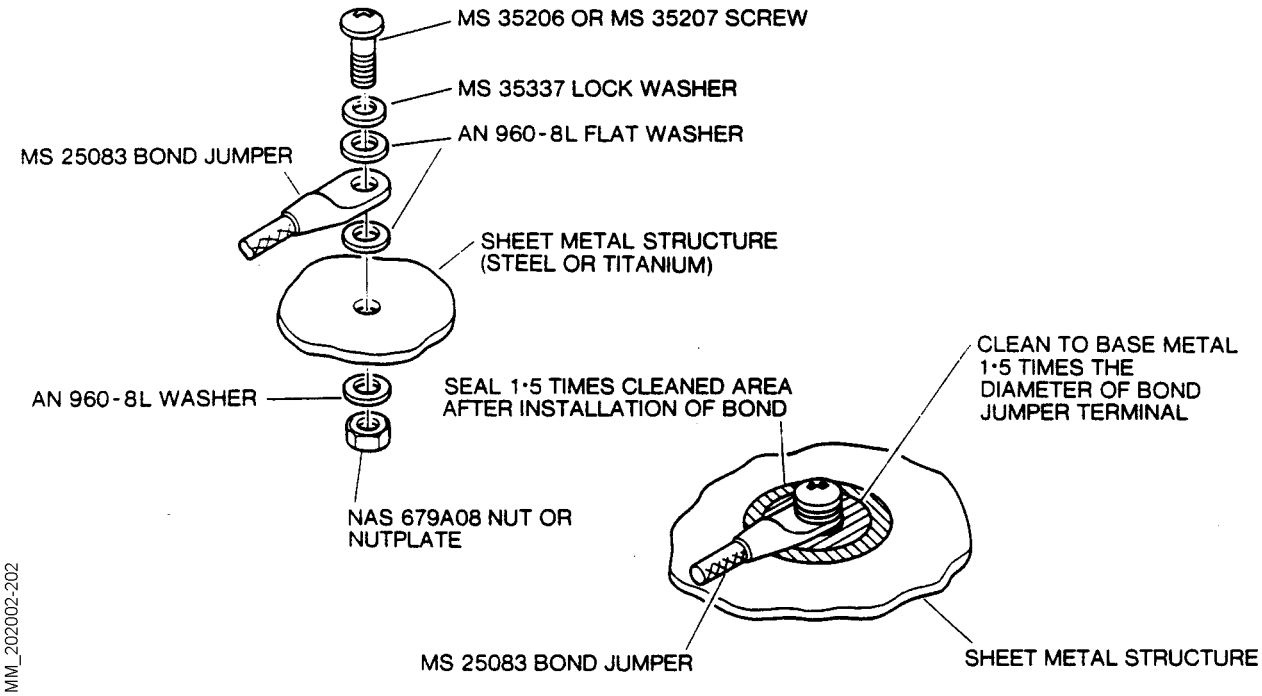


Fig. 206 - Bonding Jumper Installation - Steel and Titanium Alloys

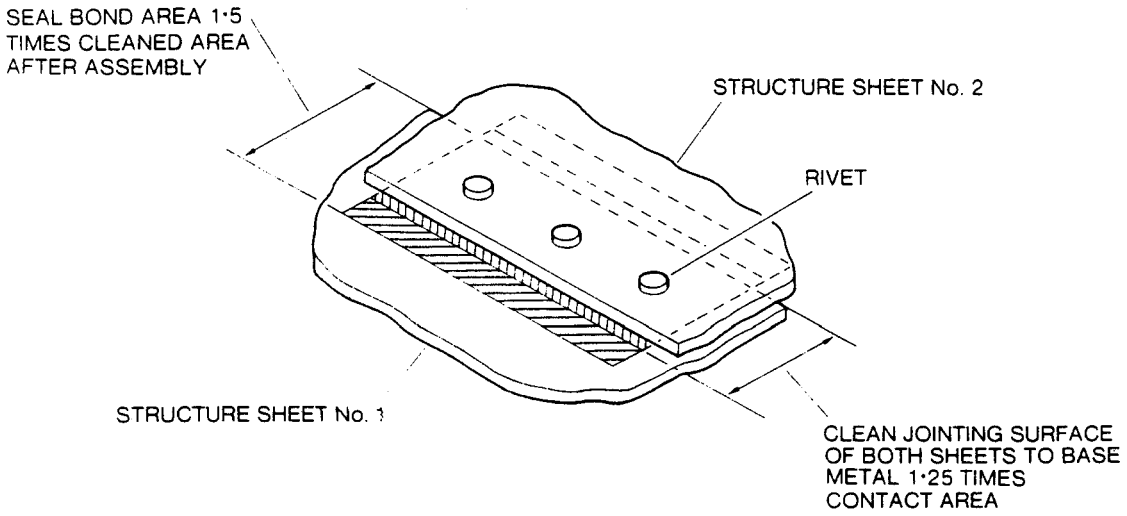


Fig. 207 - Bonding Repair for Riveted Sheet Metal Construction

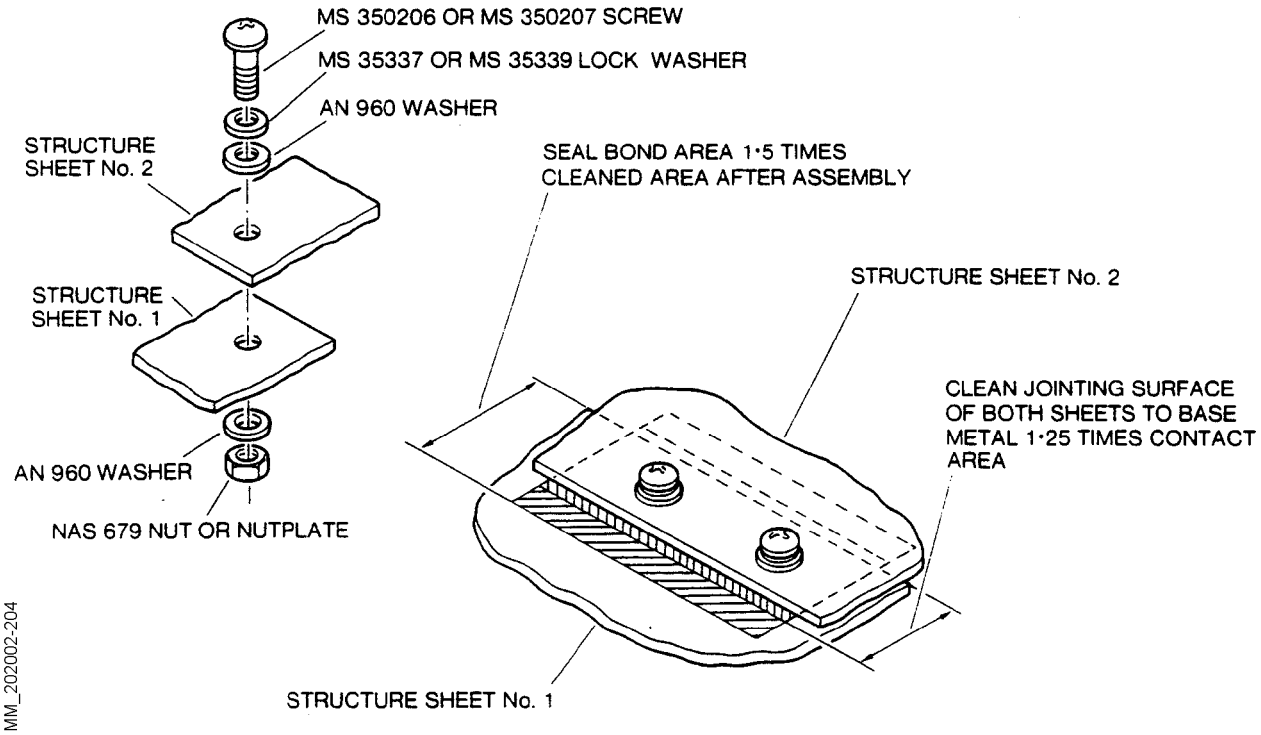


Fig. 208 - Bonding Repair for Screwed Sheet Metal Construction

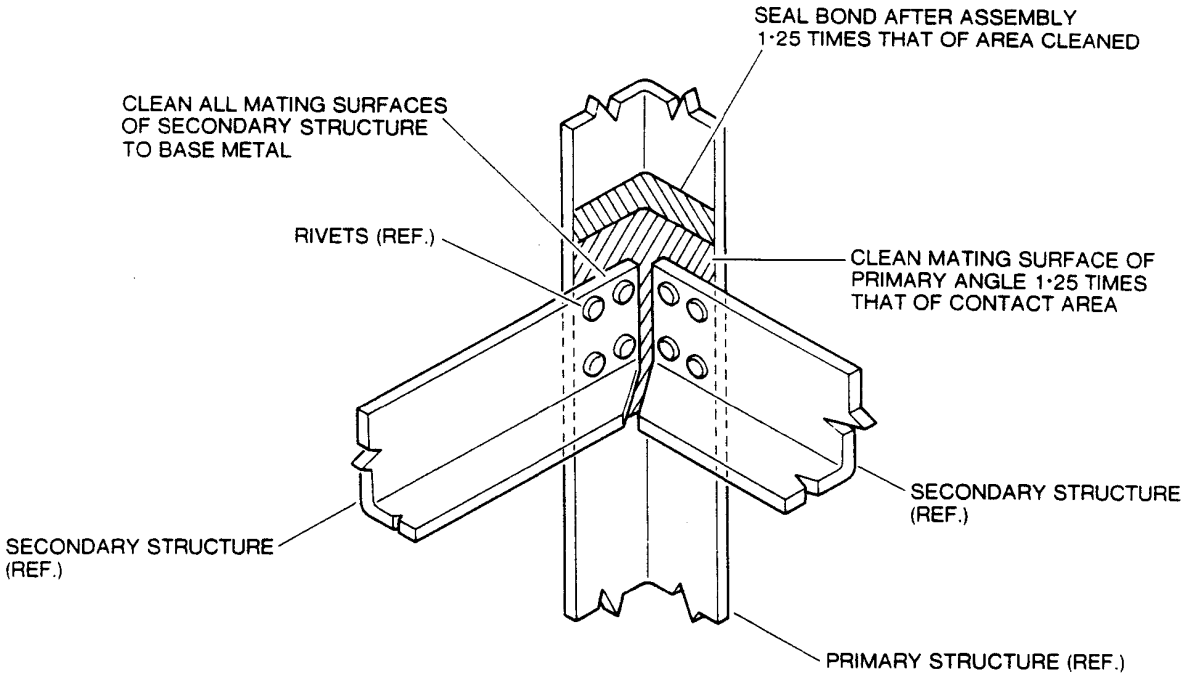


MM_202002-205

Fig. 209 - Bonding Repair for Bracket or Angle Construction

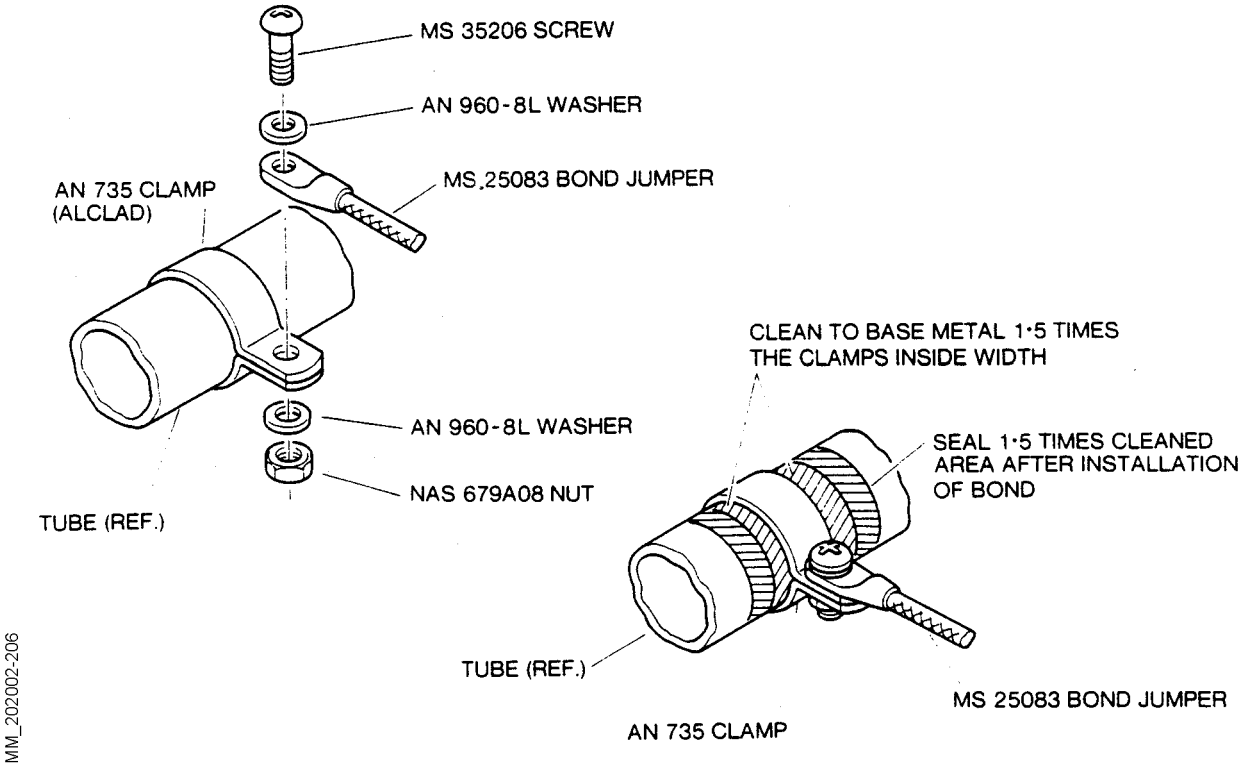


Fig. 210 - Bonding of Tubes to Structure

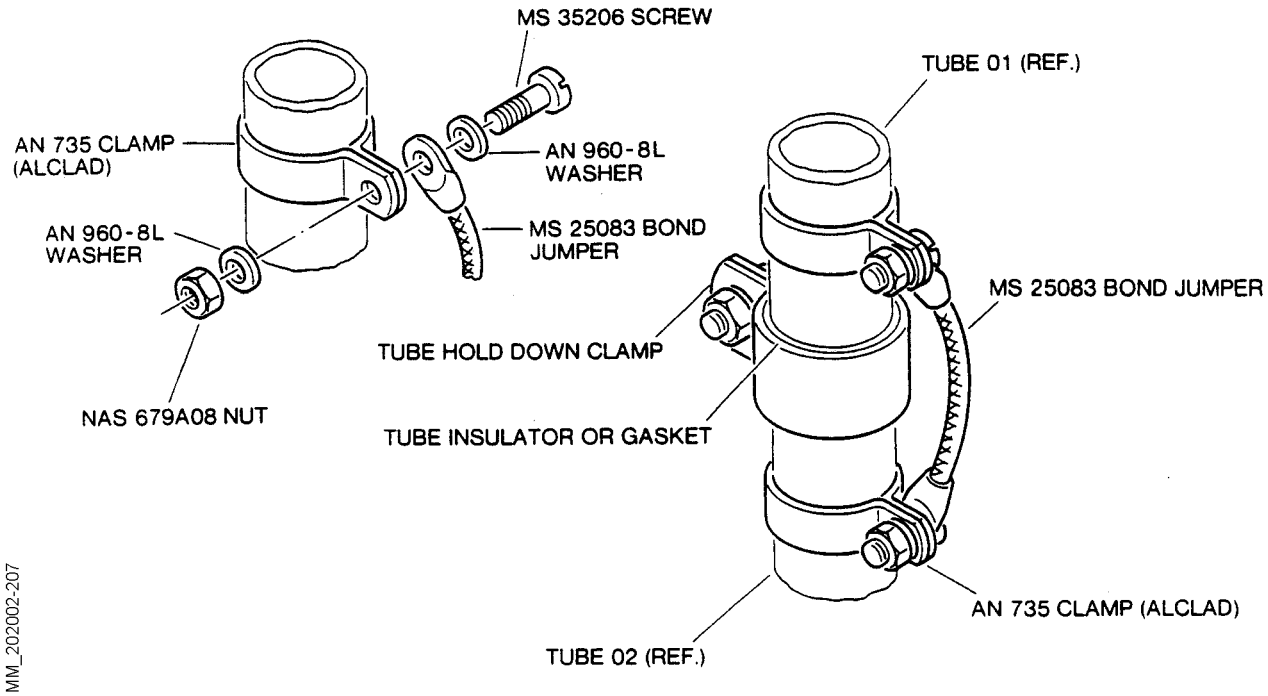


Fig. 211 - Bonding of Tubes for Continuity

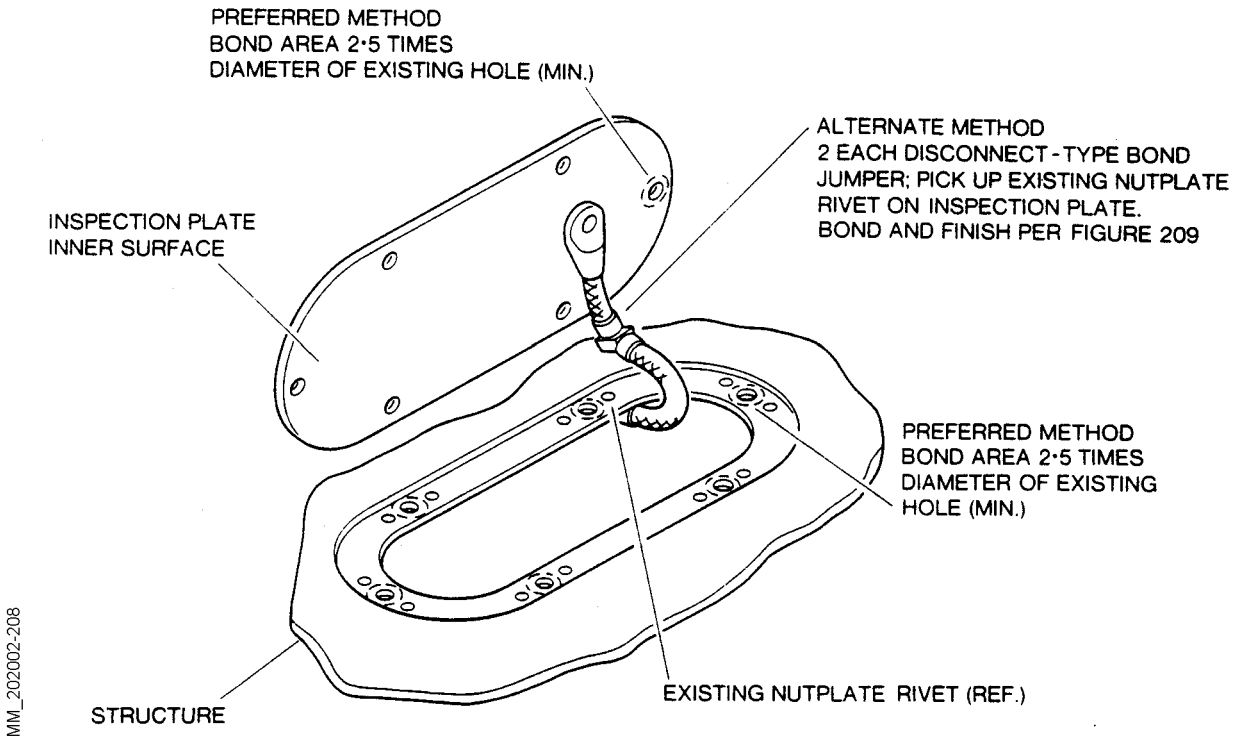


Fig. 212 - Access/Inspection Panel - Bonding

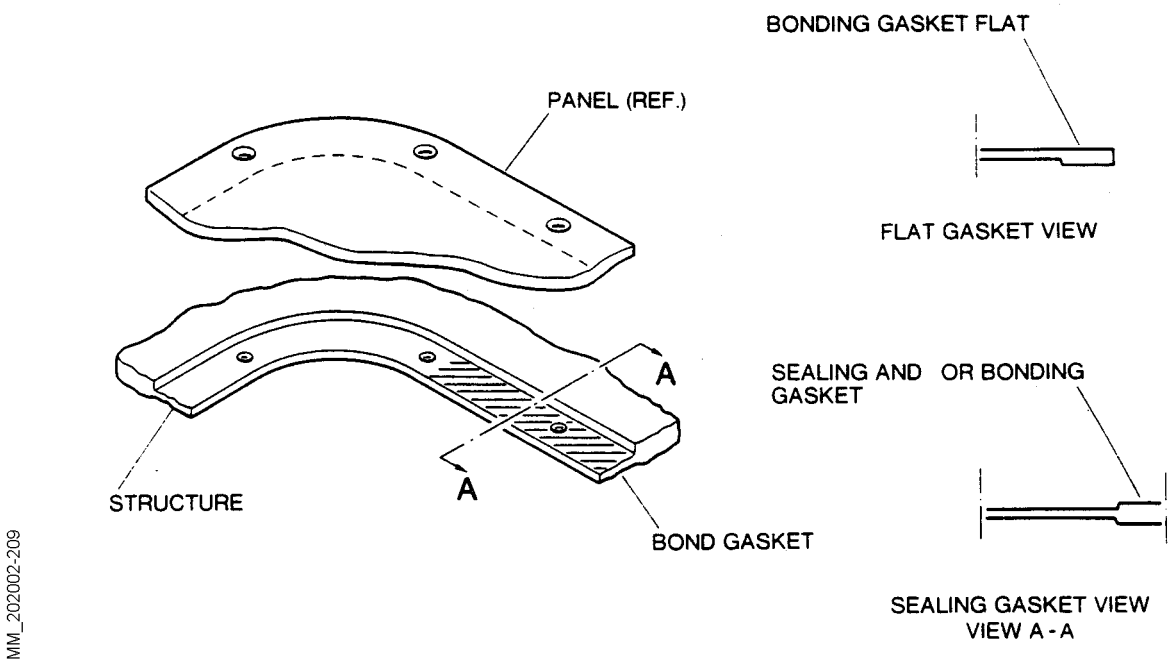


Fig. 213 - Access Panels with Gasket - Bonding

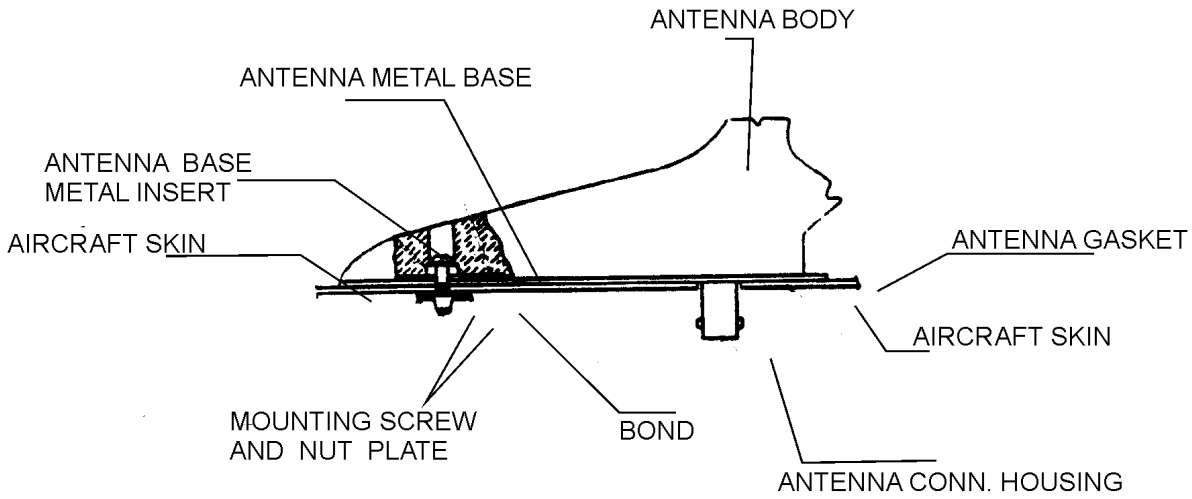


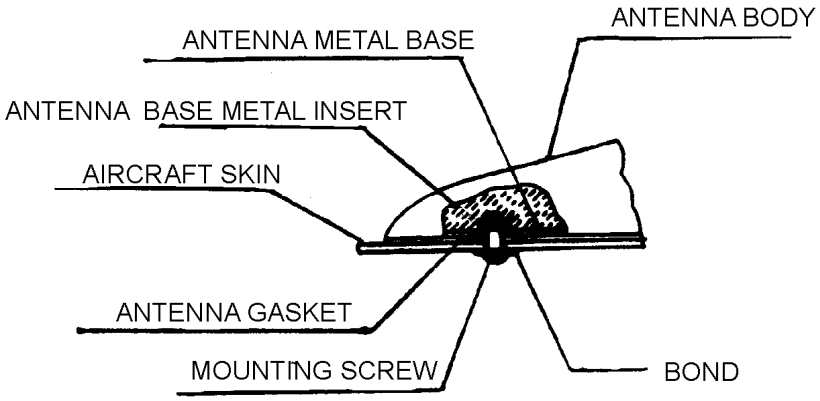


MM_202002-210

Fig. 214 - Antenna Bonding - Typical

9. Wiring Installation Requirements

**CAUTION** WHEN MODIFICATION, REPAIRS OR REPLACEMENT IS DONE, ALL MATERIALS USED MUST BE CAPABLE OF WITHSTANDING THE ENVIRONMENT AFTER INSTALLATION.

A. Wires and cables must be inspected for adequacy of support, protection and general condition throughout.

(1) Wires and cables supported by clamps, grommets or other devices must be of a suitable size and type and the wires and cables must be held securely in place without damage to the insulation.
(2) Adequate stand-off support must be provided to prevent chafing of wires when routed over structural members.
(3) Phenolic blocks, plastic liners or rubber grommets must be installed in holes in bulkheads, floors or structural memb ers through which wiring must pass.
(4) Wires and cables in j unction boxes, panels and bundles must be properly supported and laced to provide proper grouping and routing.
(5) Clamp retaining screws must be properly secured so that movement of wires and cables is restricted to the span between points of support and not at soldered or mechanical connections to terminal posts or connectors.
(6) Wires and cables must be supported and bound so that there is no interference with other wires, cables and equipment.
(7) Wires and cables must be adequately supported to prevent excessive movement in areas of high vibration.
(8) Insulating tubing and tape must be secured in place by tying or with clamps.
(9) Tapes (such as friction tape) which will dry out in service, produce chemical reactions with wire or cable insulation, or absorb moisture must not be used.
(10) Moisture-absorbent type material must not be used as "fill" for clamp or adapters. Proper size of clamp shall be used.
(11) Cable supports must not restrict the wires or cables in such a manner as to interfere with operation of eq uipment shock mounts.
(12) Wires and cables must be routed in such a manner that chafing will not occur.
(13) Wires and cables must be adequately protected in wheel wells where they are exposed to rocks, ice, mud, etc.
(14) Wires and cables must be kept separa te from high-temperature equipment such as resistors and engine bleed air ducts.
(15) The minimum radius of bend for wire or cable must be ten times the outside diameter of the wire or cable, except that at the terminal strip where the wire is suitably supported; the radius may be three times the diameter of the wire or cable. Where it is impractical to install wiring or cables within the radius requirements, the bend must be enclosed in insulating tubing.
(16) Coaxial cable must not be bent at a radius of less than six times the outside diameter of the cable.
(17) Wires and cables attached to assemblies where relative movement occurs (such as hinges, control column and control wheels) must be installed or protected in such a manner as to prevent deterioration of the wires and cables caused by the relative movement of the assembly parts.

(18) Wires and cables must be provided with enough slack to meet the following requirements:
(a) Permit ease of maintenance.
(b) Prevent mechanical strain on the wires, cables, junctions and supports.
(c) Permit free movement of shock-and-vibration mounted equipment.
(d) Allow shifting of equipment as necessary to perform alignment and servicing while installed in airplane.
(18) Unused wires must be individually dead-ended and secured into the bundle.

10. Wiring Replacement or Repair

A. Wiring must be replaced when found to show evidence of overheating.

B. Wiring can be repaired when found to have any of the following defects:
(1) Wiring that bears evidence of having been crushed or severely kinked.
(2) Shielded wiring on which the metallic shield is frayed and/or corroded.
(3) Wiring that has been damaged to the extent that the primary insulation has been broken.

11. Terminals and Terminal Block

A. Inspect to make sure that the followin g installation requirements are complete:

(1) Insulating tubing is placed over terminals (except preinsulated types) to provide electrical protection and mechanical support, and is secured to prevent slippage of the tubing from the terminal.
(2) Terminal blocks are securely mounted.
(3) Evidence of overheating is not present on connections to terminal block.
(4) Physical damages to studs or terminal block is not evident. Replace damaged terminal block.
(5) Terminal connections to terminal block studs are free of corrosion and evidence of arcing.
(a) Terminal junctions with snap-in pin contacts, check pin contacts for being pulled from the terminal junction, pin contacts for being loose and pin contacts that pull free of ther terminal junction easily.
(b) A junction box with snap-in pin contacts may be removed from its installation position and visually inspected for loose contacts, corrosion and arcing. Replace terminal junction if contact pins do not lock in securely.

12. Fuses and Fuse Holders

A. Inspect to make sure the foll owing requirements are complete:

(1) Security of connections to fuse holders.
(2) That there is no evidence of corrosion or overheating on fuses and fuse holders. Replace corroded fuses and clean fuse holders. If evidence of overheating is found, check for correct rating of fuse and cause of overheating condition.
(3) Security of mounting of fuse holder.

(4) Replenishment of spare fuses with fuses of appropriate current rating.
(5) That there are no exposed fuses susceptible to shorting.

13. Connectors

A. Make sure of the reliability of connectors by checking that the following conditions are met or that repairs are affected as required.

(1) Inspect connectors for pushed back pins , bent pins, moisture corrosion, carbon arc and damaged shell.
(2) Inspect wires leading to the connectors for deterioration due to heat, proper wrapping where required to prevent chafing and proper clamping to provide strain relief.
(3) Inspect coaxial connectors for pushed back or bent center conductor.

(a) Check continuity of the coaxial cable.
(b) Check resistance betw een conductor and shield.

(4) Inspect for loose contact pins by a slight pull on the wires. All wires that are loose or pull free of the locked position , use proper insertion and retraction tool and reinstall contact pin. If contact pin does not lock in, replace contact pin or connector.
(5) Inspect solder contact for good solder joint.
(6) Check that the connector is safetied as required.

14. Splices

A. Make sure of the reliability of crimp and disconnect splices.

(1) Check the spacing of splices at st aggered intervals to prevent excessive enlargement of the bundle.
(2) Check the wire in the immediate area of the disconnect splice for broken wire and damaged insulation.

15. Junction Boxes

A. Junction boxes must be examined to make sure of the following:

(1) Security of mounting.
(2) That the box is clean internally and free of foreign objects.
(3) That all lid fasteners on junction boxe s are securely fastened by safety wire method, self-locking fasteners or appropriate self-locking device.
(4) That terminal junctions, diodes, relays, resistors, fuses, wiring and etc. comply with the described electrical inspection.

16. Bonds

A. A bond is defined as any fixed union existing between two metallic objects that results in electrical conductivity between them. Such union results from either

physical contact between conductive surfaces of the objects or from the addition of a firm electrical connection between them. Other desirable features which must be present for a good bond to exist are as follows:

(1) Intermittent electrical contact between conducting surfaces, which may become part of a ground place or a current path, shall be prevented either by bonding or by insulation, as appropriate.
(2) Metallic conduit must be bonded to the airplane structure at each terminating and break point. The bonding path may be through the equipment at which the conduit terminates.
(3) Bond connections must be secure and free from corrosion.
(4) Bonding jumpers must be installed in such a manner that they do not interfere in any way with the operation of movable components of the airplane.
(5) Self-tapping screws must not be used for bonding purposes. Only standard threaded screws or bolts of appropriate size may be used.
(6) Bonding jumpers must be kept as short and direct as possible.
(7) Bonds must be attached directly to the basic airplane structure rather than through other bonded parts insofar as practical.

17. Switches

A. In the event the following inspections reveal that the switch is unserviceable, replace the defective switch with a switch of the same type and current rating.

(1) Do a visual examination for physical damage and check to see that the switch is securely attached to the mounting panel.
(2) Check for loose or deformed electrical connections or evidence of corrosion of the terminals, terminal lugs or screws. Check for foreign material (metal chips, wire pieces, etc.) between connections.
(3) Check for manual operation by actuating the switch several times. This also serves to remove any superficial contamination or foreign deposits on the internal electrical contacts.
(4) Test for electrical continuity as measured across the external terminals by means of an ohmmeter. Intermittent or excessive resistance normally indicates that the internal contacts are corroded. Electrically isolate the switch from other circuitry during the continuity check.

18. Circuit Breakers

A. In the event the following inspections reveal that the circuit breaker is unserviceable, replace the defective circuit breaker with a circuit breaker of the same type and current rating.

(1) Determine that the breaker case and means of mounting are secure to the mounting panel and there is no evidence of physical damage.
(2) Inspect for loose electrical termination or evidence of corrosion of the terminals, terminal lugs or screws.

(3) Mak e sure of positive manual operation by actuating the circuit breaker several times. This operation also serves to remove any superficial contaminates or foreign deposits present on the surface of the internal electrical contacts.
(4) Check for evidence that the circuit breaker has been subjected to burning or overheating. The burned area is usually caused by electrical arcing as a result of a combination of the presence of excessive moisture and poor dielectric characteristics of the breaker.
(5) A tripped circuit breaker indicates that an abnormal electrical overload has occurred. Test and physically inspect the associated wiring for short circuit.

19. Diodes and Transistors (Semiconductors)

A. The semiconductor material is either germanium or silicon. Semiconductors have electrical conductivity greater than insulators but less than good conductors. In the event the following inspections reveal that the semiconductor malfunctions, replace the defective semiconductor with a semiconductor of the same type.

(1) Stud mounted semiconductor must be secure in its mount.
(2) Soldered connections must be inspected for brok en leads and cold solder j oints.
(3) Transistors are highly shock resistant, but can be damaged by a sharp blow or by being dropped.
(4) Power transistor usually is mounted on a heat sink or on a radiator. The heat sink or radiator normally is not part of the transistor, but power transistor installation is not complete, as far as power operation is concerned, until the power transistor is properly mounted. Inspect the mounting heat sink or radiator installation.
(5) Voltage checks and continuity checks may be used to determine serviceable condition of semiconductors.

20. Resistors

A. Inspect to make sure that the following installation requirements are complete.

(1) Power resistors must be mounted in free air to dissipate heat (free air is free from contacting wires, wire ties, closed spaces and other components).
(2) Check wires in the immediate area for damaged insulation or brok en wires and proper routing.
(3) Make sure that soldered connections are secure and not a cold solder joint.
(4) Make sure that the resistor is no t broken, charred or indicates signs of overheating.

21. Relays

A. Inspect to make sure that the followin g installation requirements are complete.

(1) Check for secure installation.
(2) Check terminal contacts for cleanlin ess. The screw contact connection must be tight and wire routed to prevent the connection from working loose.
(3) Seal terminals where required.
(4) Soldered connections must be checked fo r a good joint, single strands of wire that have separated from the wire and cleanliness.
(5) Check wires in the immediate area for damaged insulation or broken wires and proper routing.

# EQUIPMENT - ALPHANUMERIC LIST

## 1. General

This section gives an alphanumeric list of the electrical/electronic equipment (units and components) appearing on the wiring diagrams in this manual.
A list of the connectors (plugs and receptacles ) used in the airplane is given in Section 20-30-00.
The equipment list provides the Piaggio-assigned code number, the equipment name, its zone location in the airplane and manual chapter/section/subject reference number.
Refer to the Chapter 6 "Dimensions and Areas" of the Maintenance Manual where the Airplane Zoning System and the location codes are explained.

## 2. Equipment List

| CODE | NOMENCLATURE | LOCATION | MANUAL REF | EFF. |
|---|---|---|---|---|
| AE1700 | AUDIO DISTRIBUTION UNIT | 231-TOILET | 23-30-00 | 1004-1104 |
| AE1700-E | AUDIO DISTRIBUTION UNIT | 231-TOILET | 23-30-00 | 1004-1104 |
| AE601 | CONTROL UNIT-VOR/DME | 224 | 33-10-10 | 1004-1104 |
| AE601 | CONTROL UNIT-VOR/DME | 224 | 34-51-00 | 1004-1104 |
| AE601 | CONTROL UNIT-VOR/DME | 224 | 34-56-00 | 1004-1104 |
| AE601 | CONTROL UNIT-VOR/DME | 224 | 34-58-10 | 1004-1104 |
| AE601 | CONTROL UNIT-VOR/DME | 224 | 34-59-10 | 1004-1104 |
| AE601 | CONTROL UNIT-VOR/DME | 224 | 34-59-20 | 1004-1104 |
| AE601 | CONTROL UNIT-VOR/DME | 224 | 34-59-30 | 1004-1104 |
| AE601 | CONTROL UNIT-VOR/DME | 224 | 34-59-40 | 1004-1104 |
| AE601 | CONTROL UNIT-VOR/DME | 224 | 34-59-60 | 1004-1104 |
| AE601 | CONTROL UNIT-VOR/DME | 224 | 34-59-70 | 1004-1104 |
| AE601 | CONTROL UNIT-VOR/DME | 224 | 34-59-80 | 1004-1104 |
| AE601 | CONTROL UNIT-VOR/DME | 224 | 34-59-90 | 1004-1104 |
| AE602 | CONTROL UNIT-VHF NAV | 224 | 33-10-10 | 1004-1104 |
| AE602 | CONTROL UNIT-VHF NAV | 224 | 34-52-00 | 1004-1104 |
| AE602 | CONTROL UNIT-VHF NAV | 224 | 34-56-00 | 1004-1104 |
| AE602 | CONTROL UNIT-VHF NAV | 224 | 34-57-00 | 1004-1104 |
| AE602 | CONTROL UNIT-VHF NAV | 224 | 34-58-10 | 1004-1104 |
| AE602 | CONTROL UNIT-VHF NAV | 224 | 34-59-10 | 1004-1104 |
| AE602 | CONTROL UNIT-VHF NAV | 224 | 34-59-20 | 1004-1104 |
| AE602 | CONTROL UNIT-VHF NAV | 224 | 34-59-30 | 1004-1104 |
| AE602 | CONTROL UNIT-VHF NAV | 224 | 34-59-40 | 1004-1104 |
| AE602 | CONTROL UNIT-VHF NAV | 224 | 34-59-60 | 1004-1104 |
| AE602 | CONTROL UNIT-VHF NAV | 224 | 34-59-70 | 1004-1104 |
| AE602 | CONTROL UNIT-VHF NAV | 224 | 34-59-80 | 1004-1104 |
| AE602 | CONTROL UNIT-VHF NAV | 224 | 34-59-90 | 1004-1104 |
| AE603 | CONTROL UNIT-PRI COM | 224 | 23-11-20 | 1004-1104 |

| CODE | NOMENCLATURE | LOCATION | MANUAL REF | EFF. |
|---|---|---|---|---|
| AE603 | CONTROL UNIT-PRI COM | 224 | 33-10-10 | 1004-1104 |
| AE603 | CONTROL UNIT-PRI COM | 224 | 45-60-00 | 1004-1104 |
| AE604 | CONTROL UNIT-SEC COM | 224 | 23-12-20 | 1004-1104 |
| AE604 | CONTROL UNIT-SEC COM | 224 | 33-10-10 | 1004-1104 |
| AE605 | CONTROL UNIT-XPNDR | 224 | 33-10-10 | 1004-1104 |
| AE605 | CONTROL UNIT-XPNDR | 224 | 34-10-00 | 1004-1104 |
| AE605 | CONTROL UNIT-XPNDR | 224 | 34-13-00 | 1004-1104 |
| AE605 | CONTROL UNIT-XPNDR | 224 | 34-54-00 | 1004-1104 |
| AE605 | CONTROL UNIT-XPNDR | 224 | 34-54-10 | 1004-1104 |
| AE605 | CONTROL UNIT-XPNDR | 224 | 34-54-20 | 1004-1104 |
| AE607 | CONTROL ADAPTER-XPNDR | 111 | 34-54-00 | 1004-1104 |
| AE607 | CONTROL ADAPTER-XPNDR | 111 | 34-54-10 | 1004-1104 |
| AE607 | CONTROL ADAPTER-XPNDR | 111 | 34-54-20 | 1004-1104 |
| AE607 | CONTROL ADAPTER-XPNDR | 111 | 34-54-21 | 1004-1104 |
| AE609 | CONTROL UNIT-ADF | 224 | 33-10-10 | 1004-1104 |
| AE609 | CONTROL UNIT-ADF | 224 | 34-53-00 | 1004-1104 |
| AE619 | CONTROL PNL-AUDIO PLT | 223 | 23-13-10 | 1004-1104 |
| AE619 | CONTROL PNL-AUDIO PLT | 223 | 23-13-20 | 1004-1104 |
| AE619 | CONTROL PNL-AUDIO PLT | 223 | 23-14-00 | 1004-1104 |
| AE619 | CONTROL PNL-AUDIO PLT | 223 | 23-50-00 | 1004-1104 |
| AE619 | CONTROL PNL-AUDIO PLT | 223 | 23-52-00 | 1004-1104 |
| AE619 | CONTROL PNL-AUDIO PLT | 223 | 23-70-00 | 1004-1104 |
| AE619 | CONTROL PNL-AUDIO PLT | 223 | 33-10-10 | 1004-1104 |
| AE619 | CONTROL PNL-AUDIO PLT | 223 | 34-43-00 | 1004-1104 |
| AE619 | CONTROL PNL-AUDIO PLT | 223 | 34-44-00 | 1004-1104 |
| AE619 | CONTROL PNL-AUDIO PLT | 223 | 34-51-10 | 1004-1104 |
| AE619 | CONTROL PNL-AUDIO PLT | 223 | 34-58-10 | 1004-1104 |
| AE620 | CONTROL PNL-AUDIO CPLT | 224 | 23-13-10 | 1004-1104 |
| AE620 | CONTROL PNL-AUDIO CPLT | 224 | 23-13-20 | 1004-1104 |
| AE620 | CONTROL PNL-AUDIO CPLT | 224 | 23-14-00 | 1004-1104 |
| AE620 | CONTROL PNL-AUDIO CPLT | 224 | 23-50-00 | 1004-1104 |
| AE620 | CONTROL PNL-AUDIO CPLT | 224 | 23-52-00 | 1004-1104 |
| AE620 | CONTROL PNL-AUDIO CPLT | 224 | 23-70-00 | 1004-1104 |
| AE620 | CONTROL PNL-AUDIO CPLT | 224 | 33-10-10 | 1004-1104 |
| AE620 | CONTROL PNL-AUDIO CPLT | 224 | 34-43-00 | 1004-1104 |
| AE620 | CONTROL PNL-AUDIO CPLT | 224 | 34-44-00 | 1004-1104 |
| AE620 | CONTROL PNL-AUDIO CPLT | 224 | 34-51-10 | 1004-1104 |
| AE620 | CONTROL PNL-AUDIO CPLT | 224 | 34-57-00 | 1004-1104 |
| AE620 | CONTROL PNL-AUDIO CPLT | 224 | 34-58-10 | 1004-1104 |
| AE621 | DIPLEXER-VOR/LOC | 112 | 34-51-00 | 1004-1104 |
| AE622 | DIPLEXER-GS | 111 | 34-51-00 | 1004-1104 |

| CODE | NOMENCLATURE | LOCATION | MANUAL REF | EFF. |
|---|---|---|---|---|
| AE623 | SENSOR-YAW RATE | 111 | 22-10-00 | 1004-1104 |
| AE626 | CONTROLLER-A/P | 226 | 22-10-00 | 1004-1104 |
| AE626 | CONTROLLER-A/P | 226 | 22-11-00 | 1004-1104 |
| AE626 | CONTROLLER-A/P | 226 | 33-10-10 | 1004-1104 |
| AE626 | CONTROLLER-A/P | 226 | 33-10-20 | 1004-1104 |
| AE626 | CONTROLLER-A/P | 226 | 34-59-80 | 1004-1104 |
| AE626 | CONTROLLER-A/P | 226 | 34-59-90 | 1004-1104 |
| AE627 | SENSOR-SLIP SKID | 231 | 22-10-00 | 1004-1104 |
| AE628 | ACCELEROMETER-VERT | 112 | 22-10-00 | 1004-1104 |
| AE628 | ACCELEROMETER-VERT | 115 | 22-10-00 | 1004-1104 |
| AE629 | COMPUTER-A/P | 113 | 22-10-00 | 1004-1104 |
| AE629 | COMPUTER-A/P | 113 | 34-56-00 | 1004-1104 |
| AE630 | SERVO-ELEVATOR | 320 | 22-10-00 | 1004-1104 |
| AE631 | SERVO-AILERON | 271 | 22-10-00 | 1004-1104 |
| AE632 | SERVO-RUDDER | 121 | 22-10-00 | 1004-1104 |
| AE632 | SERVO-RUDDER | 122 | 22-10-00 | 1004-1104 |
| AE633 | CONTROL PANEL-HF | 224 | 23-13-10 | 1004-1104 |
| AE633 | CONTROL PANEL-HF | 224 | 23-13-20 | 1004-1104 |
| AE634 | COMPUTER-LRN | 114 | 34-56-00 | 1004-1104 |
| AE634 | COMPUTER-LRN | 114 | 34-56-10 | 1004-1104 |
| AE634 | COMPUTER-LRN | 114 | 34-56-20 | 1004-1104 |
| AE635 | CONTROL UNIT-DUAL ADF | 224 | 34-55-00 | 1004-1104 |
| AE636 | CONTROL UNIT DISPLAY | 213 | 34-56-00 | 1004-1104 |
| AE637 | BIAS BOX | 111 | 22-10-00 | 1004-1104 |
| AE637 | BIAS BOX | 111 | 31-14-10 | 1004-1104 |
| AE637 | BIAS BOX | 111 | 34-12-00 | 1004-1104 |
| AE637 | BIAS BOX | 111 | 34-23-00 | 1004-1104 |
| AE637 | BIAS BOX | 111 | 34-24-00 | 1004-1104 |
| AE637 | BIAS BOX | 111 | 34-42-00 | 1004-1104 |
| AE637 | BIAS BOX | 111 | 34-51-00 | 1004-1104 |
| AE637 | BIAS BOX | 111 | 34-52-00 | 1004-1104 |
| AE637 | BIAS BOX | 111 | 34-54-20 | 1004-1104 |
| AE637 | BIAS BOX | 111 | 34-58-10 | 1004-1104 |
| AE639 | BIAS BOX-KIT-DUAL ADF | 111 | 34-55-00 | 1004-1104 |
| AE640 | PROCESSOR UNIT | 114 | 22-11-00 | 1004-1104 |
| AE640 | PROCESSOR UNIT | 114 | 34-23-00 | 1004-1104 |
| AE640 | PROCESSOR UNIT | 114 | 34-43-00 | 1004-1104 |
| AE640 | PROCESSOR UNIT | 114 | 34-56-00 | 1004-1104 |
| AE640 | PROCESSOR UNIT | 114 | 34-59-10 | 1004-1104 |
| AE640 | PROCESSOR UNIT | 114 | 34-59-20 | 1004-1104 |
| AE640 | PROCESSOR UNIT | 114 | 34-59-30 | 1004-1104 |

| CODE | NOMENCLATURE | LOCATION | MANUAL REF | EFF. |
|---|---|---|---|---|
| AE640 | PROCESSOR UNIT | 114 | 34-59-40 | 1004-1104 |
| AE640 | PROCESSOR UNIT | 114 | 34-59-60 | 1004-1104 |
| AE640 | PROCESSOR UNIT | 114 | 34-59-70 | 1004-1104 |
| AE640 | PROCESSOR UNIT | 114 | 34-59-80 | 1004-1104 |
| AE640 | PROCESSOR UNIT | 114 | 34-59-90 | 1004-1104 |
| AE641 | DISPLAY PROCESSOR | 113 | 22-11-00 | 1004-1104 |
| AE641 | DISPLAY PROCESSOR | 113 | 34-23-00 | 1004-1104 |
| AE641 | DISPLAY PROCESSOR | 113 | 34-56-00 | 1004-1104 |
| AE641 | DISPLAY PROCESSOR | 113 | 34-59-10 | 1004-1104 |
| AE641 | DISPLAY PROCESSOR | 113 | 34-59-20 | 1004-1104 |
| AE641 | DISPLAY PROCESSOR | 113 | 34-59-30 | 1004-1104 |
| AE641 | DISPLAY PROCESSOR | 113 | 34-59-40 | 1004-1104 |
| AE641 | DISPLAY PROCESSOR | 113 | 34-59-60 | 1004-1104 |
| AE641 | DISPLAY PROCESSOR | 113 | 34-59-70 | 1004-1104 |
| AE641 | DISPLAY PROCESSOR | 113 | 34-59-80 | 1004-1104 |
| AE641 | DISPLAY PROCESSOR | 113 | 34-59-90 | 1004-1104 |
| AE643 | COMPUTER-AIR DATA | 112 | 22-11-00 | 1004-1104 |
| AE643 | COMPUTER-AIR DATA | 112 | 34-12-00 | 1004-1104 |
| AE643 | COMPUTER-AIR DATA | 112 | 34-12-10 | 1004-1104 |
| AE643 | COMPUTER-AIR DATA | 112 | 34-44-00 | 1004-1104 |
| AE643 | COMPUTER-AIR DATA | 112 | 34-45-00 | 1004-1104 |
| AE643 | COMPUTER-AIR DATA | 112 | 34-54-21 | 1004-1104 |
| AE643 | COMPUTER-AIR DATA | 112 | 34-56-00 | 1004-1104 |
| AE643 | COMPUTER-AIR DATA | 112 | 34-59-10 | 1004-1104 |
| AE643 | COMPUTER-AIR DATA | 112 | 34-59-20 | 1004-1104 |
| AE643 | COMPUTER-AIR DATA | 112 | 34-59-30 | 1004-1104 |
| AE643 | COMPUTER-AIR DATA | 112 | 34-59-40 | 1004-1104 |
| AE643 | COMPUTER-AIR DATA | 112 | 34-59-60 | 1004-1104 |
| AE643 | COMPUTER-AIR DATA | 112 | 34-59-70 | 1004-1104 |
| AE643 | COMPUTER-AIR DATA | 112 | 34-59-80 | 1004-1104 |
| AE643 | COMPUTER-AIR DATA | 112 | 34-59-90 | 1004-1104 |
| AE643 | COMPUTER-AIR DATA | 112 | 45-60-00 | 1004-1104 |
| AE645 | DISPLAY SELECTOR PNL | 213 | 22-11-00 | 1004-1104 |
| AE645 | DISPLAY SELECTOR PNL | 213 | 33-10-10 | 1004-1104 |
| AE645 | DISPLAY SELECTOR PNL | 213 | 34-23-00 | 1004-1104 |
| AE645 | DISPLAY SELECTOR PNL | 213 | 34-56-00 | 1004-1104 |
| AE645 | DISPLAY SELECTOR PNL | 213 | 34-59-10 | 1004-1104 |
| AE645 | DISPLAY SELECTOR PNL | 213 | 34-59-20 | 1004-1104 |
| AE645 | DISPLAY SELECTOR PNL | 213 | 34-59-30 | 1004-1104 |
| AE645 | DISPLAY SELECTOR PNL | 213 | 34-59-40 | 1004-1104 |
| AE645 | DISPLAY SELECTOR PNL | 213 | 34-59-60 | 1004-1104 |

| CODE | NOMENCLATURE | LOCATION | MANUAL REF | EFF. |
|---|---|---|---|---|
| AE645 | DISPLAY SELECTOR PNL | 213 | 34-59-70 | 1004-1104 |
| AE645 | DISPLAY SELECTOR PNL | 213 | 34-59-80 | 1004-1104 |
| AE645 | DISPLAY SELECTOR PNL | 213 | 34-59-90 | 1004-1104 |
| AE646 | CTRL PNL-WEATHER RDR | 224 | 33-10-10 | 1004-1104 |
| AE646 | CTRL PNL-WEATHER RDR | 224 | 34-23-00 | 1004-1104 |
| AE646 | CTRL PNL-WEATHER RDR | 224 | 34-41-00 | 1004-1104 |
| AE646 | CTRL PNL-WEATHER RDR | 224 | 34-44-00 | 1004-1104 |
| AE647 | REMOTE COMPENSATOR-PRI | 111 | 34-21-00 | 1004-1104 |
| AE647 | REMOTE COMPENSATOR-PRI | 111 | 34-22-00 | 1004-1104 |
| AE647 | REMOTE COMPENSATOR-PRI | 111 | 34-28-00 | 1004-1104 |
| AE648 | REMOTE COMPENSATOR-SEC | 112 | 34-21-00 | 1004-1104 |
| AE648 | REMOTE COMPENSATOR-SEC | 112 | 34-22-00 | 1004-1104 |
| AE648 | REMOTE COMPENSATOR-SEC | 112 | 34-28-00 | 1004-1104 |
| AE649 | RCV/XMT-RAD ALT | 111 | 34-42-00 | 1004-1104 |
| AE649 | RCV/XMT-RAD ALT | 231 REAR | 34-42-00 | 1004-1104 |
| AE649 | RCV/XMT-RAD ALT | 232 REAR | 34-42-00 | 1004-1104 |
| AE650 | PROCESSOR UNIT-EHSI | 113 | 34-24-00 | 1004-1104 |
| AE650 | PROCESSOR UNIT-EHSI | 113 | 34-57-00 | 1004-1104 |
| AE651 | ANNUNCIATOR COUPLER | 112 | 22-11-00 | 1004-1104 |
| AE652 | CONTROL PNL-EHSI | 213 | 33-10-10 | 1004-1104 |
| AE652 | CONTROL PNL-EHSI | 213 | 34-24-00 | 1004-1104 |
| AE653 | BIAS BOX | 111 | 31-14-20 | 1004-1104 |
| AE656 | LONG ACCELEROMETER | 112 | 34-23-00 | 1004-1104 |
| AE657 | DPU FAN MONITOR | 115 | 21-22-00 | 1004-1104 |
| AE658 | MPU FAN MONITOR | 116 | 21-22-00 | 1004-1104 |
| AE659 | EHSI/EADI FAN MONITOR | 214 | 21-22-00 | 1004-1104 |
| AE659 | EHSI/EADI FAN MONITOR | 214 | 31-12-10 | 1004-1104 |
| AE660 | MFD FAN MONITOR | 223 | 21-22-00 | 1004-1104 |
| AE661 | EFIS PANEL | 223 | 21-22-00 | 1004-1104 |
| AE661 | EFIS PANEL | 223 | 21-51-00 | 1004-1104 |
| AE661 | EFIS PANEL | 223 | 33-10-20 | 1004-1104 |
| AE661 | EFIS PANEL | 223 | 34-23-00 | 1004-1104 |
| AE663 | SENSOR-GPS | 115 | 34-56-10 | 1004-1104 |
| AE664 | ANNUNCIATOR COUPLER | 213 | 34-10-00 | 1004-1104 |
| AE664 | ANNUNCIATOR COUPLER | 213 | 34-56-00 | 1004-1104 |
| AE664 | ANNUNCIATOR COUPLER | 213 | 34-59-10 | 1004-1104 |
| AE664 | ANNUNCIATOR COUPLER | 213 | 34-59-30 | 1004-1104 |
| AE664 | ANNUNCIATOR COUPLER | 213 | 34-59-40 | 1004-1104 |
| AE664 | ANNUNCIATOR COUPLER | 213 | 34-59-60 | 1004-1104 |
| AE664 | ANNUNCIATOR COUPLER | 213 | 34-59-90 | 1004-1104 |
| AE665 | KIT-VLF/OMEGA | 111 | 34-56-00 | 1004-1104 |

| CODE | NOMENCLATURE | LOCATION | MANUAL REF | EFF. |
|---|---|---|---|---|
| AE666 | RUBIDIUM FREQUENCY STANDARD | 111 | 34-56-20 | 1004-1104 |
| AE667 | NAVIGATION COMPUTER UNIT | 113 | 23-30-00 | 1004-1104 |
| AE667 | NAVIGATION COMPUTER UNIT | 113 | 34-59-10 | 1004-1104 |
| AE668 | SENSOR-GPS/OSS | 114 | 34-59-10 | 1004-1104 |
| AE668 | SENSOR-GPS/OSS | 114 | 34-59-20 | 1004-1104 |
| AE668 | SENSOR-GPS/OSS | 114 | 34-59-30 | 1004-1104 |
| AE669 | BIAS BOX-KIT FMS UNS 1A/B | 111 | 34-59-10 | 1004-1104 |
| AE669 | BIAS BOX-KIT FMS UNS 1A/B | 111 | 34-59-30 | 1004-1104 |
| AE669 | BIAS BOX-KIT FMS UNS 1A/B | 111 | 34-59-40 | 1004-1104 |
| AE669 | BIAS BOX-KIT FMS UNS 1A/B | 111 | 34-59-60 | 1004-1104 |
| AE670 | CONTROL DISPLAY UNIT | 213 | 34-59-10 | 1004-1104 |
| AE670 | CONTROL DISPLAY UNIT | 213 | 34-59-20 | 1004-1104 |
| AE670 | CONTROL DISPLAY UNIT | 213 | 34-59-30 | 1004-1104 |
| AE679 | COMPUTER-NAV UNIT | 113 | 34-59-30 | 1004-1104 |
| AE680 | CONFIGURATION MODULE | 113 | 34-59-30 | 1004-1104 |
| AE681 | COMPUTER-NAV UNIT | 113 | 34-59-20 | 1004-1104 |
| AE682 | BIAS BOX-KIT-FMS/TACAN | 111 | 31-14-18 | 1004-1104 |
| AE682 | BIAS BOX-KIT-FMS/TACAN | 111 | 34-59-20 | 1004-1104 |
| AE683 | DIGITAL INTERFACE UNIT | 231 | 23-30-00 | 1004-1104 |
| AE684 | DISPLAY LCD-CABIN | 231 | 23-30-00 | 1004-1104 |
| AE685 | MULTIDISCPLAYER | 231 | 23-30-00 | 1004-1104 |
| AE688 | ANNUNCIATOR COUPLER | 232 | 34-59-20 | 1004-1104 |
| AE691 | ADAPTER UNIT-DIMMER/XPNDR | 213 | 34-54-10 | 1004-1104 |
| AE691 | ADAPTER UNIT-DIMMER/XPNDR | 213 | 34-59-41 | 1004-1104 |
| AE693 | VIDEORECORDER | 231 | 23-30-00 | 1004-1104 |
| AE694 | DISPLAY LCD-CABIN | 241 | 23-30-00 | 1004-1104 |
| AE696 | CONFIGURATION MODULE | 113 | 34-59-40 | 1004-1104 |
| AE696 | CONFIGURATION MODULE | 113 | 34-59-60 | 1004-1104 |
| AE696 | CONFIGURATION MODULE | 113 | 34-59-70 | 1004-1104 |
| AE696 | CONFIGURATION MODULE | 113 | 34-59-80 | 1004-1104 |
| AE696 | CONFIGURATION MODULE | 113 | 34-59-90 | 1004-1104 |
| AE697 | EFIS PANEL | 223 | 22-11-00 | 1004-1104 |
| AE698 | CONTROL DISPLAY UNIT | 213 | 34-59-40 | 1004-1104 |
| AE699 | COMPUTER-NAV UNIT | 113 | 34-54-21 | 1004-1104 |
| AE699 | COMPUTER-NAV UNIT | 113 | 34-59-40 | 1004-1104 |
| AE699 | COMPUTER-NAV UNIT | 113 | 34-59-41 | 1004-1104 |
| AE700 | RADIO REFER SENSOR | 114 | 34-59-41 | 1004-1104 |
| AE701 | SPLITTER-VOR ANTENNA | 112 | 34-59-41 | 1004-1104 |
| AE702 | AUDIO CONTROL PANEL | 232 REAR | 23-52-00 | 1004-1104 |
| AE703 | DIPLEXER-MKR | 113 | 34-58-10 | 1004-1104 |
| AE704 | CONTROL DISPLAY UNIT | 213 | 34-59-60 | 1004-1104 |

| CODE | NOMENCLATURE | LOCATION | MANUAL REF | EFF. |
|---|---|---|---|---|
| AE704 | CONTROL DISPLAY UNIT | 213 | 34-59-70 | 1004-1104 |
| AE705 | UNS 1K COMPUTER | 113 | 23-70-00 | 1004-1104 |
| AE705 | UNS 1K COMPUTER | 113 | 34-44-00 | 1004-1104 |
| AE705 | UNS 1K COMPUTER | 113 | 34-59-60 | 1004-1104 |
| AE706 | CONTROL UNIT-VOICE RCDR | 213 | 23-70-00 | 1004-1104 |
| AE707 | VOICE RECORDER | 281 | 23-70-00 | 1004-1104 |
| AE708 | CTRL UNIT VHF/FM HI BAND | 213 | 23-14-00 | 1004-1104 |
| AE709 | G-SWITCH | 231-TOILET | 23-70-00 | 1004-1104 |
| AE711 | CONTROL UNIT-XPNDR - 92 | 224 | 34-10-00 | 1004-1104 |
| AE711 | CONTROL UNIT-XPNDR - 92 | 224 | 34-54-30 | 1004-1104 |
| AE711 | CONTROL UNIT-XPNDR - 92 | 224 | 34-54-40 | 1004-1104 |
| AE712 | UNS-1K MMMS NCU | 114 | 34-59-70 | 1004-1104 |
| AE713 | ANNUNCIATOR COUPLER | 213 | 34-59-70 | 1004-1104 |
| AE713 | ANNUNCIATOR COUPLER | 213 | 34-59-80 | 1004-1104 |
| AE717 | CONTROL-92E | TBD | 34-54-21 | 1004-1104 |
| AE759 | G-SWITCH | 340 | 25-61-00 | 1004-1104 |
| AE760 | ELT REMOTE CONTRL. | 228 | 25-61-00 | 1004-1104 |
| AE764 | BIAS BOX | 111 | 22-11-00 | 1004-1104 |
| AE764 | BIAS BOX | 111 | 34-54-30 | 1004-1104 |
| AE764 | BIAS BOX | 111 | 34-54-40 | 1004-1104 |
| AE764 | BIAS BOX | 111 | 34-59-70 | 1004-1104 |
| AE765 | DIM/XPNDR ADPT UNIT | 224 | 34-54-30 | 1004-1104 |
| AE766 | AIR DATA DISPLAY UNIT | 224 | 34-10-00 | 1004-1104 |
| AE766 | AIR DATA DISPLAY UNIT | 224 | 34-54-21 | 1004-1104 |
| AE767 | TCAS CONTROL PNL | 213 | 34-43-00 | 1004-1104 |
| AE767 | TCAS CONTROL PNL | 213 | 34-45-00 | 1004-1104 |
| AE768 | CONFIGURATION MODULE | 232 VANITY | 34-43-00 | 1004-1104 |
| AE769 | CONTROL PANEL -TCAS | 213 | 34-43-00 | 1004-1104 |
| AE772 | CONFIGURATION MODULE | 224 | 34-10-00 | 1004-1104 |
| AE773 | COMPUTER | TBD | 34-44-00 | 1004-1104 |
| AE773 | COMPUTER | TBD | 34-45-00 | 1004-1104 |
| AE774 | CONFIGURATION MODULE | TBD | 34-44-00 | 1004-1104 |
| AE775 | UNS-1L NCU | 114 | 34-59-80 | 1004-1104 |
| AE775 | UNS-1L NCU | 114 | 34-59-90 | 1004-1104 |
| AE776 | UNS-1L CDU | 114 | 34-59-80 | 1004-1104 |
| AE776 | UNS-1L CDU | 114 | 34-59-90 | 1004-1104 |
| AE777 | BIAS BOX | 111 | 34-59-90 | 1004-1104 |
| AE778 | BIAS BOX | 111 | 34-59-80 | 1004-1104 |
| AE779 | DIM/XPNDR/GPSUNIT | 223 | 34-43-00 | 1004-1104 |
| AE779 | DIM/XPNDR/GPSUNIT | 223 | 34-54-40 | 1004-1104 |
| B10 | ACTUATOR-ROLL TRIM | 642 | 27-00-00 | 1004-1104 |

| CODE | NOMENCLATURE | LOCATION | MANUAL REF | EFF. |
|---|---|---|---|---|
| B11 | ACTUATOR-YAW TRIM | 320 | 27-00-00 | 1004-1104 |
| B12 | ACTUATOR-PITCH TRIM | 320 | 27-00-00 | 1004-1104 |
| B14 | ACTUATOR-ENG ICE VANE R | 420 | 30-24-00 | 1004-1104 |
| B15 | ACTUATOR-ENG ICE VANE L | 410 | 30-24-00 | 1004-1104 |
| B16 | ACTUATOR-FWD WING FLAP R | 661 | 27-50-00 | 1004-1104 |
| B17 | ACTUATOR-FWD WING FLAP L | 561 | 27-50-00 | 1004-1104 |
| B18 | ACTUATOR-OUTBD WING FLAP | 271 | 27-50-00 | 1004-1104 |
| B1800 | AIR VALVE | 242 PSU | 21-23-00 | 1004-1104 |
| B1801 | AIR VALVE | 241 PSU | 21-23-00 | 1004-1104 |
| B1802 | AIR VALVE | 242 PSU | 21-23-00 | 1004-1104 |
| B1803 | AIR VALVE | 241 PSU | 21-23-00 | 1004-1104 |
| B1804 | AIR VALVE | 242 PSU | 21-23-00 | 1004-1104 |
| B1805 | AIR VALVE | 241 PSU | 21-23-00 | 1004-1104 |
| B1806 | AIR VALVE | 242 PSU | 21-23-00 | 1004-1104 |
| B1807 | AIR VALVE | 241 PSU | 21-23-00 | 1004-1104 |
| B19 | ACTUATOR-INBD WING FLAP | 271 | 27-50-00 | 1004-1104 |
| B21 | OUTFLOW VALVE L | 161 NEAR F | 21-31-00 | 1004-1104 |
| B24 | VALVE S/O-WING A/I R | 420 | 30-11-00 | 1004-1104 |
| B25 | VALVE S/O-WING A/I L | 410 | 30-11-00 | 1004-1104 |
| B26 | VALVE-TANK C/F | 262 | 28-13-00 | 1004-1104 |
| B27 | ACTUATOR-LTS DOOR | 110 | 33-40-00 | 1004-1104 |
| B28 | FAN-MIXING | 111 | 21-51-00 | 1004-1104 |
| B29 | AVIONICS FAN-L LWR | 113 | 21-51-00 | 1004-1104 |
| B3 | STBY BST PUMP-FUEL SYST L | 251 | 28-20-00 | 1004-1104 |
| B30 | AVIONICS FAN-R UPR | 116 | 21-51-00 | 1004-1104 |
| B31 | AVIONICS FAN-L UPR | 115 | 21-51-00 | 1004-1104 |
| B33 | BLOWER-CABIN | FS 5245 L | 21-52-00 | 1004-1104 |
| B34 | TEMP MODULATING VALV | 292 | 21-41-00 | 1004-1104 |
| B35 | TEMP MODULATING VALV | 291 | 21-41-00 | 1004-1104 |
| B36 | BLOWER | 292 | 21-41-00 | 1004-1104 |
| B4 | STBY BST PUMP-FUEL SYST R | 252 | 28-20-00 | 1004-1104 |
| B5 | MAIN BST PUMP-FUEL SYST L | 251 | 28-20-00 | 1004-1104 |
| B6 | MAIN BST PUMP-FUEL SYST R | 252 | 28-20-00 | 1004-1104 |
| B600 | BLOWER | 116 | 21-22-00 | 1004-1104 |
| B601 | BLOWER | 115 | 21-22-00 | 1004-1104 |
| B602 | BLOWER | 224 | 21-22-00 | 1004-1104 |
| B603 | BLOWER | 214 | 21-22-00 | 1004-1104 |
| B603 | BLOWER | 214 | 31-12-10 | 1004-1104 |
| B605 | FAN MODULE | 114 | 34-56-00 | 1004-1104 |
| B8 | ACTUATOR-VALVE | 291 | 21-60-00 | 1004-1104 |
| B9 | BLOWER | 122 | 21-10-00 | 1004-1104 |

| CODE | NOMENCLATURE | LOCATION | MANUAL REF | EFF. |
|---|---|---|---|---|
| B9 | BLOWER | 122 | 21-20-00 | 1004-1104 |
| B9 | BLOWER | 122 | 21-40-00 | 1004-1104 |
| BT1 | BATTERY | 281 | 24-30-00 | 1004-1104 |
| BT1 | BATTERY | 281 | 24-61-00 | 1004-1104 |
| C1 | CAPACITOR | 214 | 29-10-00 | 1004-1104 |
| C1 | CAPACITOR | 214 | 29-30-00 | 1004-1104 |
| C1 | CAPACITOR | 214 | 32-30-00 | 1004-1104 |
| C1 | CAPACITOR | 214 | 32-60-00 | 1004-1104 |
| C10 | CAPACITOR | 214 | 32-51-00 | 1004-1104 |
| C11 | CAPACITOR | 213 | 31-13-31 | 1004-1104 |
| C11 | CAPACITOR | 213 | 61-20-00 | 1004-1104 |
| C12 | CAPACITOR | 213 | 31-13-31 | 1004-1104 |
| C12 | CAPACITOR | 213 | 61-20-00 | 1004-1104 |
| C13 | CAPACITOR | 532 | 28-41-00 | 1004-1104 |
| C14 | CAPACITOR | 632 | 28-41-00 | 1004-1104 |
| C15 | CAPACITOR | 224 | 30-80-00 | 1004-1104 |
| C15 | CAPACITOR | 224 | 31-19-11 | 1004-1104 |
| C16 | CAPACITOR | 224 | 30-80-00 | 1004-1104 |
| C16 | CAPACITOR | 224 | 31-19-11 | 1004-1104 |
| C17 | CAPACITOR | SEE PCB17 | 21-52-00 | 1004-1104 |
| C17 | CAPACITOR | SEE PCB17 | 31-16-10 | 1004-1104 |
| C4 | CAPACITOR | 213 | 27-00-00 | 1004-1104 |
| C4 | CAPACITOR | 213 | 31-13-21 | 1004-1104 |
| C5 | CAPACITOR | 214 | 32-51-00 | 1004-1104 |
| C6 | CAPACITOR | 214 | 32-51-00 | 1004-1104 |
| C600 | CAPACITOR | 112 | 34-12-00 | 1004-1104 |
| C7 | CAPACITOR | 214 | 32-51-00 | 1004-1104 |
| C8 | CAPACITOR | 214 | 32-51-00 | 1004-1104 |
| C9 | CAPACITOR | 214 | 32-51-00 | 1004-1104 |
| CB1 | CIRCUIT BREAKER | SEE E31 | 24-30-00 | 1004-1104 |
| CB1 | CIRCUIT BREAKER | SEE E31 | 31-12-50 | 1004-1104 |
| CB10 | CIRCUIT BREAKER | SEE E30 | 24-61-00 | 1004-1104 |
| CB10 | CIRCUIT BREAKER | SEE E30 | 31-12-60 | 1004-1104 |
| CB100 | CIRCUIT BREAKER | SEE E31 | 29-10-00 | 1004-1104 |
| CB100 | CIRCUIT BREAKER | SEE E31 | 29-30-00 | 1004-1104 |
| CB100 | CIRCUIT BREAKER | SEE E31 | 31-12-50 | 1004-1104 |
| CB100 | CIRCUIT BREAKER | SEE E31 | 32-30-00 | 1004-1104 |
| CB100 | CIRCUIT BREAKER | SEE E31 | 32-60-00 | 1004-1104 |
| CB101 | CIRCUIT BREAKER | SEE E31 | 29-10-00 | 1004-1104 |
| CB101 | CIRCUIT BREAKER | SEE E31 | 29-30-00 | 1004-1104 |
| CB101 | CIRCUIT BREAKER | SEE E31 | 31-12-50 | 1004-1104 |

| CODE | NOMENCLATURE | LOCATION | MANUAL REF | EFF. |
|---|---|---|---|---|
| CB101 | CIRCUIT BREAKER | SEE E31 | 32-30-00 | 1004-1104 |
| CB101 | CIRCUIT BREAKER | SEE E31 | 32-60-00 | 1004-1104 |
| CB102 | CIRCUIT BREAKER | SEE E31 | 31-12-50 | 1004-1104 |
| CB102 | CIRCUIT BREAKER | SEE E31 | 31-51-00 | 1004-1104 |
| CB103 | CIRCUIT BREAKER | SEE E31 | 29-10-00 | 1004-1104 |
| CB103 | CIRCUIT BREAKER | SEE E31 | 29-30-00 | 1004-1104 |
| CB103 | CIRCUIT BREAKER | SEE E31 | 31-12-50 | 1004-1104 |
| CB103 | CIRCUIT BREAKER | SEE E31 | 32-30-00 | 1004-1104 |
| CB103 | CIRCUIT BREAKER | SEE E31 | 32-60-00 | 1004-1104 |
| CB104 | CIRCUIT BREAKER | 215 | 31-12-50 | 1004-1104 |
| CB104 | CIRCUIT BREAKER | 215 | 32-51-00 | 1004-1104 |
| CB105 | CIRCUIT BREAKER | SEE E4 | 29-10-00 | 1004-1104 |
| CB105 | CIRCUIT BREAKER | SEE E4 | 29-30-00 | 1004-1104 |
| CB105 | CIRCUIT BREAKER | SEE E4 | 31-15-10 | 1004-1104 |
| CB105 | CIRCUIT BREAKER | SEE E4 | 32-30-00 | 1004-1104 |
| CB105 | CIRCUIT BREAKER | SEE E4 | 32-60-00 | 1004-1104 |
| CB107 | CIRCUIT BREAKER | SEE E30 | 27-50-00 | 1004-1104 |
| CB107 | CIRCUIT BREAKER | SEE E30 | 31-12-60 | 1004-1104 |
| CB108 | CIRCUIT BREAKER | SEE E4 | 26-20-00 | 1004-1104 |
| CB109 | CIRCUIT BREAKER | SEE E4 | 26-20-00 | 1004-1104 |
| CB11 | CIRCUIT BREAKER | SEE E4 | 24-61-00 | 1004-1104 |
| CB11 | CIRCUIT BREAKER | SEE E4 | 31-15-10 | 1004-1104 |
| CB110 | CIRCUIT BREAKER | 216 | 31-12-60 | 1004-1104 |
| CB110 | CIRCUIT BREAKER | 216 | 33-40-00 | 1004-1104 |
| CB111 | CIRCUIT BREAKER | 216 | 31-12-60 | 1004-1104 |
| CB113 | CIRCUIT BREAKER | 216 | 21-51-00 | 1004-1104 |
| CB113 | CIRCUIT BREAKER | 216 | 31-12-60 | 1004-1104 |
| CB114 | CIRCUIT BREAKER | SEE E31 | 24-61-00 | 1004-1104 |
| CB114 | CIRCUIT BREAKER | SEE E31 | 31-12-50 | 1004-1104 |
| CB115 | CIRCUIT BREAKER | 215 | 31-12-50 | 1004-1104 |
| CB115 | CIRCUIT BREAKER | 215 | 31-50-00 | 1004-1104 |
| CB117 | CIRCUIT BREAKER | 215 | 31-12-50 | 1004-1104 |
| CB117 | CIRCUIT BREAKER | 215 | 35-10-00 | 1004-1104 |
| CB118 | CIRCUIT BREAKER | 216 | 31-12-60 | 1004-1104 |
| CB118 | CIRCUIT BREAKER | 216 | 77-20-00 | 1004-1104 |
| CB119 | CIRCUIT BREAKER | 215 | 31-12-50 | 1004-1104 |
| CB119 | CIRCUIT BREAKER | 215 | 77-20-00 | 1004-1104 |
| CB12 | CIRCUIT BREAKER | SEE E30 | 24-61-00 | 1004-1104 |
| CB12 | CIRCUIT BREAKER | SEE E30 | 31-12-60 | 1004-1104 |
| CB120 | CIRCUIT BREAKER | SEE E4 | 27-00-00 | 1004-1104 |
| CB120 | CIRCUIT BREAKER | SEE E4 | 31-15-10 | 1004-1104 |

| CODE | NOMENCLATURE | LOCATION | MANUAL REF | EFF. |
|---|---|---|---|---|
| CB121 | CIRCUIT BREAKER | SEE E4 | 28-13-00 | 1004-1104 |
| CB121 | CIRCUIT BREAKER | SEE E4 | 31-15-10 | 1004-1104 |
| CB127 | CIRCUIT BREAKER | SEE E30 | 31-12-60 | 1004-1104 |
| CB127 | CIRCUIT BREAKER | SEE E30 | 61-20-00 | 1004-1104 |
| CB128 | CIRCUIT BREAKER | SEE E30 | 30-40-00 | 1004-1104 |
| CB128 | CIRCUIT BREAKER | SEE E30 | 31-12-60 | 1004-1104 |
| CB129 | CIRCUIT BREAKER | SEE E31 | 30-40-00 | 1004-1104 |
| CB129 | CIRCUIT BREAKER | SEE E31 | 31-12-50 | 1004-1104 |
| CB13 | CIRCUIT BREAKER | SEE E31 | 24-61-00 | 1004-1104 |
| CB13 | CIRCUIT BREAKER | SEE E31 | 31-12-50 | 1004-1104 |
| CB130 | CIRCUIT BREAKER | SEE E30 | 30-40-00 | 1004-1104 |
| CB130 | CIRCUIT BREAKER | SEE E30 | 31-12-60 | 1004-1104 |
| CB131 | CIRCUIT BREAKER | SEE E31 | 30-40-00 | 1004-1104 |
| CB131 | CIRCUIT BREAKER | SEE E31 | 31-12-50 | 1004-1104 |
| CB133 | CIRCUIT BREAKER | SEE E31 | 31-12-50 | 1004-1104 |
| CB133 | CIRCUIT BREAKER | SEE E31 | 79-31-00 | 1004-1104 |
| CB134 | CIRCUIT BREAKER | SEE E30 | 31-12-60 | 1004-1104 |
| CB134 | CIRCUIT BREAKER | SEE E30 | 79-31-00 | 1004-1104 |
| CB135 | CIRCUIT BREAKER | SEE E30 | 61-21-00 | 1004-1104 |
| CB136 | CIRCUIT BREAKER | SEE E30 | 30-23-00 | 1004-1104 |
| CB136 | CIRCUIT BREAKER | SEE E30 | 30-24-00 | 1004-1104 |
| CB136 | CIRCUIT BREAKER | SEE E30 | 31-12-60 | 1004-1104 |
| CB136 | CIRCUIT BREAKER | SEE E30 | 79-20-00 | 1004-1104 |
| CB137 | CIRCUIT BREAKER | SEE E31 | 31-12-50 | 1004-1104 |
| CB137 | CIRCUIT BREAKER | SEE E31 | 33-40-00 | 1004-1104 |
| CB138 | CIRCUIT BREAKER | SEE E31 | 31-12-50 | 1004-1104 |
| CB138 | CIRCUIT BREAKER | SEE E31 | 33-40-00 | 1004-1104 |
| CB139 | CIRCUIT BREAKER | SEE E30 | 29-10-00 | 1004-1104 |
| CB139 | CIRCUIT BREAKER | SEE E31 | 29-10-00 | 1004-1104 |
| CB139 | CIRCUIT BREAKER | SEE E30 | 29-30-00 | 1004-1104 |
| CB139 | CIRCUIT BREAKER | SEE E31 | 29-30-00 | 1004-1104 |
| CB139 | CIRCUIT BREAKER | SEE E30 | 31-12-50 | 1004-1104 |
| CB139 | CIRCUIT BREAKER | SEE E31 | 31-12-50 | 1004-1104 |
| CB139 | CIRCUIT BREAKER | SEE E30 | 32-30-00 | 1004-1104 |
| CB139 | CIRCUIT BREAKER | SEE E31 | 32-30-00 | 1004-1104 |
| CB139 | CIRCUIT BREAKER | SEE E30 | 32-60-00 | 1004-1104 |
| CB139 | CIRCUIT BREAKER | SEE E31 | 32-60-00 | 1004-1104 |
| CB14 | CIRCUIT BREAKER | SEE E4 | 24-61-00 | 1004-1104 |
| CB14 | CIRCUIT BREAKER | SEE E4 | 31-15-10 | 1004-1104 |
| CB140 | CIRCUIT BREAKER | SEE E30 | 24-20-00 | 1004-1104 |
| CB140 | CIRCUIT BREAKER | SEE E30 | 31-12-60 | 1004-1104 |

| CODE | NOMENCLATURE | LOCATION | MANUAL REF | EFF. |
|---|---|---|---|---|
| CB141 | CIRCUIT BREAKER | SEE E31 | 24-20-00 | 1004-1104 |
| CB141 | CIRCUIT BREAKER | SEE E31 | 31-12-50 | 1004-1104 |
| CB142 | CIRCUIT BREAKER | SEE E4 | 31-15-10 | 1004-1104 |
| CB143 | CIRCUIT BREAKER | SEE E31 | 30-80-00 | 1004-1104 |
| CB143 | CIRCUIT BREAKER | SEE E31 | 31-12-50 | 1004-1104 |
| CB143 | CIRCUIT BREAKER | SEE E31 | 31-19-11 | 1004-1104 |
| CB143 | CIRCUIT BREAKER | SEE E31 | 31-52-00 | 1004-1104 |
| CB144 | CIRCUIT BREAKER | SEE E30 | 30-23-00 | 1004-1104 |
| CB144 | CIRCUIT BREAKER | SEE E30 | 30-24-00 | 1004-1104 |
| CB144 | CIRCUIT BREAKER | SEE E30 | 31-12-60 | 1004-1104 |
| CB144 | CIRCUIT BREAKER | SEE E30 | 79-20-00 | 1004-1104 |
| CB145 | CIRCUIT BREAKER | SEE E31 | 30-11-00 | 1004-1104 |
| CB145 | CIRCUIT BREAKER | SEE E31 | 31-12-50 | 1004-1104 |
| CB146 | CIRCUIT BREAKER | SEE E30 | 31-12-60 | 1004-1104 |
| CB147 | CIRCUIT BREAKER | SEE E30 | 33-22-10 | 1004-1104 |
| CB147 | CIRCUIT BREAKER | SEE E30 | 33-22-20 | 1004-1104 |
| CB147 | CIRCUIT BREAKER | SEE E30 | 33-22-40 | 1004-1104 |
| CB147 | CIRCUIT BREAKER | SEE E30 | 33-22-50 | 1004-1104 |
| CB147 | CIRCUIT BREAKER | SEE E30 | 33-22-70 | 1004-1104 |
| CB147 | CIRCUIT BREAKER | SEE E30 | 33-27-00 | 1004-1104 |
| CB148 | CIRCUIT BREAKER | SEE E30 | 27-50-00 | 1004-1104 |
| CB148 | CIRCUIT BREAKER | SEE E30 | 31-12-60 | 1004-1104 |
| CB15 | CIRCUIT BREAKER | SEE E4 | 24-61-00 | 1004-1104 |
| CB15 | CIRCUIT BREAKER | SEE E4 | 31-15-10 | 1004-1104 |
| CB150 | CIRCUIT BREAKER | SEE E30 | 27-50-00 | 1004-1104 |
| CB150 | CIRCUIT BREAKER | SEE E30 | 31-12-60 | 1004-1104 |
| CB152 | CIRCUIT BREAKER | SEE E30 | 27-50-00 | 1004-1104 |
| CB152 | CIRCUIT BREAKER | SEE E30 | 31-12-60 | 1004-1104 |
| CB153 | CIRCUIT BREAKER | SEE E30 | 32-43-00 | 1004-1104 |
| CB154 | CIRCUIT BREAKER | SEE E4 | 21-10-00 | 1004-1104 |
| CB154 | CIRCUIT BREAKER | SEE E4 | 21-20-00 | 1004-1104 |
| CB154 | CIRCUIT BREAKER | SEE E4 | 21-40-00 | 1004-1104 |
| CB154 | CIRCUIT BREAKER | SEE E4 | 31-15-10 | 1004-1104 |
| CB155 | CIRCUIT BREAKER | SEE E4 | 21-52-00 | 1004-1104 |
| CB155 | CIRCUIT BREAKER | SEE E4 | 31-15-10 | 1004-1104 |
| CB156 | CIRCUIT BREAKER | 216 | 31-12-60 | 1004-1104 |
| CB157 | CIRCUIT BREAKER | SEE E4 | 21-52-00 | 1004-1104 |
| CB157 | CIRCUIT BREAKER | SEE E4 | 31-15-10 | 1004-1104 |
| CB158 | CIRCUIT BREAKER | 216 | 21-52-00 | 1004-1104 |
| CB158 | CIRCUIT BREAKER | 216 | 31-12-60 | 1004-1104 |
| CB16 | CIRCUIT BREAKER | SEE E4 | 24-61-00 | 1004-1104 |

| CODE | NOMENCLATURE | LOCATION | MANUAL REF | EFF. |
|---|---|---|---|---|
| CB16 | CIRCUIT BREAKER | SEE E4 | 31-15-10 | 1004-1104 |
| CB160 | CIRCUIT BREAKER | SEE E4 | 24-63-00 | 1004-1104 |
| CB1601 | CIRCUIT BREAKER | SEE E1700 | 24-62-10 | 1004-1104 |
| CB1601 | CIRCUIT BREAKER | SEE E1700 | 24-62-20 | 1004-1104 |
| CB1601 | CIRCUIT BREAKER | SEE E1700 | 24-62-40 | 1004-1104 |
| CB1601 | CIRCUIT BREAKER | SEE E1700 | 24-62-60 | 1004-1104 |
| CB1601 | CIRCUIT BREAKER | SEE E1700 | 31-11-30 | 1004-1104 |
| CB1601 | CIRCUIT BREAKER | SEE E1700 | 33-24-00 | 1004-1104 |
| CB1602 | CIRCUIT BREAKER | SEE E1700 | 24-62-10 | 1004-1104 |
| CB1602 | CIRCUIT BREAKER | SEE E1700 | 24-62-20 | 1004-1104 |
| CB1602 | CIRCUIT BREAKER | SEE E1700 | 24-62-40 | 1004-1104 |
| CB1602 | CIRCUIT BREAKER | SEE E1700 | 24-62-50 | 1004-1104 |
| CB1602 | CIRCUIT BREAKER | SEE E1700 | 24-62-60 | 1004-1104 |
| CB1602 | CIRCUIT BREAKER | SEE E1700 | 31-11-10 | 1004-1104 |
| CB1602 | CIRCUIT BREAKER | SEE E1700 | 31-11-20 | 1004-1104 |
| CB1602 | CIRCUIT BREAKER | SEE E1700 | 31-11-30 | 1004-1104 |
| CB1602 | CIRCUIT BREAKER | SEE E1700 | 33-25-00 | 1004-1104 |
| CB1603 | CIRCUIT BREAKER | SEE E1700 | 21-23-00 | 1004-1104 |
| CB1603 | CIRCUIT BREAKER | SEE E1700 | 24-62-10 | 1004-1104 |
| CB1603 | CIRCUIT BREAKER | SEE E1700 | 24-62-20 | 1004-1104 |
| CB1603 | CIRCUIT BREAKER | SEE E1700 | 24-62-30 | 1004-1104 |
| CB1604 | CIRCUIT BREAKER | SEE E1700 | 24-62-10 | 1004-1104 |
| CB1604 | CIRCUIT BREAKER | SEE E1700 | 24-62-20 | 1004-1104 |
| CB1604 | CIRCUIT BREAKER | SEE E1700 | 24-62-30 | 1004-1104 |
| CB1604 | CIRCUIT BREAKER | SEE E1700 | 24-62-40 | 1004-1104 |
| CB1604 | CIRCUIT BREAKER | SEE E1700 | 24-62-50 | 1004-1104 |
| CB1604 | CIRCUIT BREAKER | SEE E1700 | 24-62-60 | 1004-1104 |
| CB1604 | CIRCUIT BREAKER | SEE E1700 | 31-11-10 | 1004-1104 |
| CB1604 | CIRCUIT BREAKER | SEE E1700 | 31-11-20 | 1004-1104 |
| CB1604 | CIRCUIT BREAKER | SEE E1700 | 31-11-30 | 1004-1104 |
| CB1604 | CIRCUIT BREAKER | SEE E1700 | 33-12-00 | 1004-1104 |
| CB1604 | CIRCUIT BREAKER | SEE E1700 | 33-12-10 | 1004-1104 |
| CB1604 | CIRCUIT BREAKER | SEE E1700 | 33-12-30 | 1004-1104 |
| CB1604 | CIRCUIT BREAKER | SEE E1700 | 33-12-40 | 1004-1104 |
| CB1604 | CIRCUIT BREAKER | SEE E1700 | 33-12-60 | 1004-1104 |
| CB1605 | CIRCUIT BREAKER | SEE E1700 | 24-62-10 | 1004-1104 |
| CB1605 | CIRCUIT BREAKER | SEE E1700 | 24-62-20 | 1004-1104 |
| CB1605 | CIRCUIT BREAKER | SEE E1700 | 24-62-30 | 1004-1104 |
| CB1605 | CIRCUIT BREAKER | SEE E1700 | 24-62-40 | 1004-1104 |
| CB1605 | CIRCUIT BREAKER | SEE E1700 | 24-62-50 | 1004-1104 |
| CB1605 | CIRCUIT BREAKER | SEE E1700 | 24-62-60 | 1004-1104 |

| CODE | NOMENCLATURE | LOCATION | MANUAL REF | EFF. |
|---|---|---|---|---|
| CB1605 | CIRCUIT BREAKER | SEE E1700 | 31-11-10 | 1004-1104 |
| CB1605 | CIRCUIT BREAKER | SEE E1700 | 31-11-20 | 1004-1104 |
| CB1605 | CIRCUIT BREAKER | SEE E1700 | 31-11-30 | 1004-1104 |
| CB1605 | CIRCUIT BREAKER | SEE E1700 | 33-12-00 | 1004-1104 |
| CB1605 | CIRCUIT BREAKER | SEE E1700 | 33-12-10 | 1004-1104 |
| CB1605 | CIRCUIT BREAKER | SEE E1700 | 33-12-40 | 1004-1104 |
| CB1605 | CIRCUIT BREAKER | SEE E1700 | 33-12-60 | 1004-1104 |
| CB1605 | CIRCUIT BREAKER | SEE E1700 | 33-20-10 | 1004-1104 |
| CB1605 | CIRCUIT BREAKER | SEE E1700 | 33-20-20 | 1004-1104 |
| CB1605 | CIRCUIT BREAKER | SEE E1700 | 33-20-30 | 1004-1104 |
| CB1605 | CIRCUIT BREAKER | SEE E1700 | 33-20-40 | 1004-1104 |
| CB1606 | CIRCUIT BREAKER | SEE E1700 | 24-62-10 | 1004-1104 |
| CB1606 | CIRCUIT BREAKER | SEE E1700 | 24-62-40 | 1004-1104 |
| CB1606 | CIRCUIT BREAKER | SEE E1700 | 25-31-00 | 1004-1104 |
| CB1606 | CIRCUIT BREAKER | SEE E1700 | 31-11-30 | 1004-1104 |
| CB1607 | CIRCUIT BREAKER | SEE E1700 | 24-62-10 | 1004-1104 |
| CB1607 | CIRCUIT BREAKER | SEE E1700 | 24-62-20 | 1004-1104 |
| CB1607 | CIRCUIT BREAKER | SEE E1700 | 24-62-40 | 1004-1104 |
| CB1607 | CIRCUIT BREAKER | SEE E1700 | 24-62-50 | 1004-1104 |
| CB1607 | CIRCUIT BREAKER | SEE E1700 | 24-62-60 | 1004-1104 |
| CB1607 | CIRCUIT BREAKER | SEE E1700 | 25-41-00 | 1004-1104 |
| CB1607 | CIRCUIT BREAKER | SEE E1700 | 31-11-10 | 1004-1104 |
| CB1607 | CIRCUIT BREAKER | SEE E1700 | 31-11-20 | 1004-1104 |
| CB1607 | CIRCUIT BREAKER | SEE E1700 | 31-11-30 | 1004-1104 |
| CB1609 | CIRCUIT BREAKER | SEE E1700 | 24-62-10 | 1004-1104 |
| CB1609 | CIRCUIT BREAKER | SEE E1700 | 24-62-20 | 1004-1104 |
| CB1609 | CIRCUIT BREAKER | SEE E1700 | 24-62-40 | 1004-1104 |
| CB1609 | CIRCUIT BREAKER | SEE E1700 | 24-62-60 | 1004-1104 |
| CB1609 | CIRCUIT BREAKER | SEE E1700 | 25-42-00 | 1004-1104 |
| CB1609 | CIRCUIT BREAKER | SEE E1700 | 31-11-10 | 1004-1104 |
| CB1609 | CIRCUIT BREAKER | SEE E1700 | 31-11-20 | 1004-1104 |
| CB1609 | CIRCUIT BREAKER | SEE E1700 | 31-11-30 | 1004-1104 |
| CB161 | CIRCUIT BREAKER | SEE E4 | 24-63-00 | 1004-1104 |
| CB1610 | CIRCUIT BREAKER | SEE E1700 | 24-62-10 | 1004-1104 |
| CB1610 | CIRCUIT BREAKER | SEE E1700 | 24-62-20 | 1004-1104 |
| CB1610 | CIRCUIT BREAKER | SEE E1700 | 24-62-40 | 1004-1104 |
| CB1610 | CIRCUIT BREAKER | SEE E1700 | 24-62-50 | 1004-1104 |
| CB1610 | CIRCUIT BREAKER | SEE E1700 | 31-11-10 | 1004-1104 |
| CB1610 | CIRCUIT BREAKER | SEE E1700 | 31-11-20 | 1004-1104 |
| CB1610 | CIRCUIT BREAKER | SEE E1700 | 31-11-30 | 1004-1104 |
| CB1610 | CIRCUIT BREAKER | SEE E1700 | 33-21-10 | 1004-1104 |

| CODE | NOMENCLATURE | LOCATION | MANUAL REF | EFF. |
|---|---|---|---|---|
| CB1610 | CIRCUIT BREAKER | SEE E1700 | 33-21-20 | 1004-1104 |
| CB1610 | CIRCUIT BREAKER | SEE E1700 | 33-21-50 | 1004-1104 |
| CB1610 | CIRCUIT BREAKER | SEE E1700 | 33-21-60 | 1004-1104 |
| CB1611 | CIRCUIT BREAKER | SEE E1700 | 24-62-10 | 1004-1104 |
| CB1611 | CIRCUIT BREAKER | SEE E1700 | 24-62-50 | 1004-1104 |
| CB1611 | CIRCUIT BREAKER | SEE E1700 | 25-31-10 | 1004-1104 |
| CB1611 | CIRCUIT BREAKER | SEE E1700 | 31-11-10 | 1004-1104 |
| CB165 | CIRCUIT BREAKER | SEE E30 | 24-63-00 | 1004-1104 |
| CB166 | CIRCUIT BREAKER | SEE E30 | 24-63-00 | 1004-1104 |
| CB167 | CIRCUIT BREAKER | SEE E30 | 24-63-00 | 1004-1104 |
| CB168 | CIRCUIT BREAKER | SEE E4 | 21-41-00 | 1004-1104 |
| CB168 | CIRCUIT BREAKER | SEE E4 | 31-15-10 | 1004-1104 |
| CB169 | CIRCUIT BREAKER | SEE E1700 | 24-63-00 | 1004-1104 |
| CB17 | CIRCUIT BREAKER | SEE E4 | 24-61-00 | 1004-1104 |
| CB17 | CIRCUIT BREAKER | SEE E4 | 31-15-10 | 1004-1104 |
| CB18 | CIRCUIT BREAKER | SEE E4 | 24-30-00 | 1004-1104 |
| CB18 | CIRCUIT BREAKER | SEE E4 | 24-61-00 | 1004-1104 |
| CB18 | CIRCUIT BREAKER | SEE E4 | 31-15-10 | 1004-1104 |
| CB19 | CIRCUIT BREAKER | SEE E4 | 24-30-00 | 1004-1104 |
| CB19 | CIRCUIT BREAKER | SEE E4 | 24-61-00 | 1004-1104 |
| CB19 | CIRCUIT BREAKER | SEE E4 | 31-15-10 | 1004-1104 |
| CB2 | CIRCUIT BREAKER | SEE E31 | 24-30-00 | 1004-1104 |
| CB2 | CIRCUIT BREAKER | SEE E31 | 31-12-50 | 1004-1104 |
| CB20 | CIRCUIT BREAKER | SEE E4 | 24-30-00 | 1004-1104 |
| CB20 | CIRCUIT BREAKER | SEE E4 | 31-15-10 | 1004-1104 |
| CB21 | CIRCUIT BREAKER | SEE E4 | 24-30-00 | 1004-1104 |
| CB21 | CIRCUIT BREAKER | SEE E4 | 31-15-10 | 1004-1104 |
| CB22 | CIRCUIT BREAKER | SEE E30 | 24-30-00 | 1004-1104 |
| CB22 | CIRCUIT BREAKER | SEE E30 | 31-12-60 | 1004-1104 |
| CB23 | CIRCUIT BREAKER | SEE E30 | 24-30-00 | 1004-1104 |
| CB23 | CIRCUIT BREAKER | SEE E30 | 31-12-60 | 1004-1104 |
| CB24 | CIRCUIT BREAKER | SEE E4 | 24-30-00 | 1004-1104 |
| CB24 | CIRCUIT BREAKER | SEE E4 | 31-15-10 | 1004-1104 |
| CB25 | CIRCUIT BREAKER | SEE E4 | 24-30-00 | 1004-1104 |
| CB25 | CIRCUIT BREAKER | SEE E4 | 24-31-00 | 1004-1104 |
| CB25 | CIRCUIT BREAKER | SEE E4 | 31-15-10 | 1004-1104 |
| CB29 | CIRCUIT BREAKER | SEE E31 | 31-12-50 | 1004-1104 |
| CB29 | CIRCUIT BREAKER | SEE E31 | 33-40-00 | 1004-1104 |
| CB3 | CIRCUIT BREAKER | SEE E31 | 24-30-00 | 1004-1104 |
| CB3 | CIRCUIT BREAKER | SEE E31 | 31-12-50 | 1004-1104 |
| CB30 | CIRCUIT BREAKER | SEE E30 | 31-12-60 | 1004-1104 |

| CODE | NOMENCLATURE | LOCATION | MANUAL REF | EFF. |
|---|---|---|---|---|
| CB30 | CIRCUIT BREAKER | SEE E30 | 33-40-00 | 1004-1104 |
| CB32 | CIRCUIT BREAKER | SEE E30 | 31-12-60 | 1004-1104 |
| CB32 | CIRCUIT BREAKER | SEE E30 | 33-40-00 | 1004-1104 |
| CB33 | CIRCUIT BREAKER | SEE E30 | 31-12-60 | 1004-1104 |
| CB33 | CIRCUIT BREAKER | SEE E30 | 33-40-00 | 1004-1104 |
| CB34 | CIRCUIT BREAKER | SEE E30 | 31-12-50 | 1004-1104 |
| CB34 | CIRCUIT BREAKER | SEE E30 | 33-40-00 | 1004-1104 |
| CB35 | CIRCUIT BREAKER | SEE E30 | 26-10-00 | 1004-1104 |
| CB35 | CIRCUIT BREAKER | SEE E30 | 31-12-60 | 1004-1104 |
| CB36 | CIRCUIT BREAKER | SEE E30 | 28-20-00 | 1004-1104 |
| CB36 | CIRCUIT BREAKER | SEE E30 | 31-12-60 | 1004-1104 |
| CB37 | CIRCUIT BREAKER | SEE E31 | 28-20-00 | 1004-1104 |
| CB37 | CIRCUIT BREAKER | SEE E31 | 31-12-50 | 1004-1104 |
| CB38 | CIRCUIT BREAKER | SEE E4 | 28-20-00 | 1004-1104 |
| CB38 | CIRCUIT BREAKER | SEE E4 | 31-15-10 | 1004-1104 |
| CB38 | CIRCUIT BREAKER | SEE E4 | 45-60-00 | 1004-1104 |
| CB39 | CIRCUIT BREAKER | SEE E4 | 28-20-00 | 1004-1104 |
| CB39 | CIRCUIT BREAKER | SEE E4 | 31-15-10 | 1004-1104 |
| CB39 | CIRCUIT BREAKER | SEE E4 | 45-60-00 | 1004-1104 |
| CB4 | CIRCUIT BREAKER | SEE E31 | 24-30-00 | 1004-1104 |
| CB4 | CIRCUIT BREAKER | SEE E31 | 31-12-50 | 1004-1104 |
| CB40 | CIRCUIT BREAKER | SEE E30 | 28-20-00 | 1004-1104 |
| CB40 | CIRCUIT BREAKER | SEE E30 | 31-12-60 | 1004-1104 |
| CB41 | CIRCUIT BREAKER | SEE E31 | 28-20-00 | 1004-1104 |
| CB41 | CIRCUIT BREAKER | SEE E31 | 31-12-50 | 1004-1104 |
| CB42 | CIRCUIT BREAKER | SEE E4 | 28-20-00 | 1004-1104 |
| CB42 | CIRCUIT BREAKER | SEE E4 | 31-15-10 | 1004-1104 |
| CB43 | CIRCUIT BREAKER | SEE E4 | 28-20-00 | 1004-1104 |
| CB43 | CIRCUIT BREAKER | SEE E4 | 31-15-10 | 1004-1104 |
| CB44 | CIRCUIT BREAKER | SEE E31 | 28-20-00 | 1004-1104 |
| CB44 | CIRCUIT BREAKER | SEE E31 | 31-12-50 | 1004-1104 |
| CB45 | CIRCUIT BREAKER | SEE E31 | 31-12-50 | 1004-1104 |
| CB45 | CIRCUIT BREAKER | SEE E31 | 73-30-00 | 1004-1104 |
| CB46 | CIRCUIT BREAKER | SEE E30 | 31-12-60 | 1004-1104 |
| CB46 | CIRCUIT BREAKER | SEE E30 | 73-30-00 | 1004-1104 |
| CB47 | CIRCUIT BREAKER | SEE E4 | 24-30-00 | 1004-1104 |
| CB47 | CIRCUIT BREAKER | SEE E4 | 31-15-10 | 1004-1104 |
| CB48 | CIRCUIT BREAKER | SEE E4 | 24-30-00 | 1004-1104 |
| CB48 | CIRCUIT BREAKER | SEE E4 | 31-15-10 | 1004-1104 |
| CB49 | CIRCUIT BREAKER | SEE E30 | 21-41-00 | 1004-1104 |
| CB49 | CIRCUIT BREAKER | SEE E30 | 21-60-00 | 1004-1104 |

| CODE | NOMENCLATURE | LOCATION | MANUAL REF | EFF. |
|---|---|---|---|---|
| CB49 | CIRCUIT BREAKER | SEE E30 | 31-12-60 | 1004-1104 |
| CB5 | CIRCUIT BREAKER | SEE E31 | 24-30-00 | 1004-1104 |
| CB5 | CIRCUIT BREAKER | SEE E31 | 31-12-50 | 1004-1104 |
| CB52 | CIRCUIT BREAKER | SEE E30 | 30-40-00 | 1004-1104 |
| CB52 | CIRCUIT BREAKER | SEE E30 | 31-12-60 | 1004-1104 |
| CB57 | CIRCUIT BREAKER | SEE E31 | 30-12-00 | 1004-1104 |
| CB57 | CIRCUIT BREAKER | SEE E31 | 31-12-50 | 1004-1104 |
| CB58 | CIRCUIT BREAKER | SEE E30 | 30-12-00 | 1004-1104 |
| CB58 | CIRCUIT BREAKER | SEE E30 | 31-12-60 | 1004-1104 |
| CB59 | CIRCUIT BREAKER | SEE E31 | 30-40-00 | 1004-1104 |
| CB59 | CIRCUIT BREAKER | SEE E31 | 31-12-50 | 1004-1104 |
| CB6 | CIRCUIT BREAKER | SEE E31 | 24-30-00 | 1004-1104 |
| CB6 | CIRCUIT BREAKER | SEE E31 | 31-12-50 | 1004-1104 |
| CB601 | CIRCUIT BREAKER | SEE E31 | 31-12-50 | 1004-1104 |
| CB601 | CIRCUIT BREAKER | SEE E31 | 34-54-00 | 1004-1104 |
| CB601 | CIRCUIT BREAKER | SEE E31 | 34-54-10 | 1004-1104 |
| CB601 | CIRCUIT BREAKER | SEE E31 | 34-54-20 | 1004-1104 |
| CB601 | CIRCUIT BREAKER | SEE E31 | 34-54-21 | 1004-1104 |
| CB601 | CIRCUIT BREAKER | SEE E31 | 34-54-30 | 1004-1104 |
| CB601 | CIRCUIT BREAKER | SEE E31 | 34-54-40 | 1004-1104 |
| CB602 | CIRCUIT BREAKER | SEE E30 | 23-12-20 | 1004-1104 |
| CB602 | CIRCUIT BREAKER | SEE E30 | 31-12-60 | 1004-1104 |
| CB603 | CIRCUIT BREAKER | SEE E31 | 31-12-50 | 1004-1104 |
| CB603 | CIRCUIT BREAKER | SEE E31 | 34-51-00 | 1004-1104 |
| CB604 | CIRCUIT BREAKER | SEE E30 | 23-50-00 | 1004-1104 |
| CB604 | CIRCUIT BREAKER | SEE E30 | 31-12-60 | 1004-1104 |
| CB605 | CIRCUIT BREAKER | SEE E31 | 31-12-50 | 1004-1104 |
| CB605 | CIRCUIT BREAKER | SEE E31 | 34-12-00 | 1004-1104 |
| CB607 | CIRCUIT BREAKER | SEE E30 | 31-12-60 | 1004-1104 |
| CB607 | CIRCUIT BREAKER | SEE E30 | 34-53-00 | 1004-1104 |
| CB607 | CIRCUIT BREAKER | SEE E30 | 34-55-00 | 1004-1104 |
| CB608 | CIRCUIT BREAKER | SEE E30 | 34-57-00 | 1004-1104 |
| CB61 | CIRCUIT BREAKER | SEE E31 | 31-12-50 | 1004-1104 |
| CB61 | CIRCUIT BREAKER | SEE E31 | 79-31-00 | 1004-1104 |
| CB610 | CIRCUIT BREAKER | SEE E31 | 31-12-50 | 1004-1104 |
| CB610 | CIRCUIT BREAKER | SEE E31 | 34-51-00 | 1004-1104 |
| CB611 | CIRCUIT BREAKER | SEE E31 | 31-12-50 | 1004-1104 |
| CB611 | CIRCUIT BREAKER | SEE E31 | 34-21-00 | 1004-1104 |
| CB611 | CIRCUIT BREAKER | SEE E31 | 34-22-00 | 1004-1104 |
| CB611 | CIRCUIT BREAKER | SEE E31 | 34-28-00 | 1004-1104 |
| CB612 | CIRCUIT BREAKER | SEE E31 | 31-12-50 | 1004-1104 |

| CODE | NOMENCLATURE | LOCATION | MANUAL REF | EFF. |
|---|---|---|---|---|
| CB612 | CIRCUIT BREAKER | SEE E31 | 34-25-00 | 1004-1104 |
| CB614 | CIRCUIT BREAKER | SEE E30 | 31-12-60 | 1004-1104 |
| CB614 | CIRCUIT BREAKER | SEE E30 | 34-11-00 | 1004-1104 |
| CB614 | CIRCUIT BREAKER | SEE E30 | 34-13-00 | 1004-1104 |
| CB617 | CIRCUIT BREAKER | SEE E30 | 31-12-60 | 1004-1104 |
| CB617 | CIRCUIT BREAKER | SEE E30 | 34-52-00 | 1004-1104 |
| CB618 | CIRCUIT BREAKER | SEE E30 | 31-12-60 | 1004-1104 |
| CB618 | CIRCUIT BREAKER | SEE E30 | 34-21-00 | 1004-1104 |
| CB618 | CIRCUIT BREAKER | SEE E30 | 34-22-00 | 1004-1104 |
| CB618 | CIRCUIT BREAKER | SEE E30 | 34-28-00 | 1004-1104 |
| CB619 | CIRCUIT BREAKER | SEE E30 | 22-10-00 | 1004-1104 |
| CB619 | CIRCUIT BREAKER | SEE E30 | 31-12-60 | 1004-1104 |
| CB62 | CIRCUIT BREAKER | SEE E30 | 31-12-60 | 1004-1104 |
| CB62 | CIRCUIT BREAKER | SEE E30 | 79-31-00 | 1004-1104 |
| CB620 | CIRCUIT BREAKER | SEE E30 | 22-10-00 | 1004-1104 |
| CB620 | CIRCUIT BREAKER | SEE E30 | 31-12-60 | 1004-1104 |
| CB622 | CIRCUIT BREAKER | SEE E30 | 31-12-60 | 1004-1104 |
| CB622 | CIRCUIT BREAKER | SEE E30 | 31-20-00 | 1004-1104 |
| CB63 | CIRCUIT BREAKER | SEE E31 | 28-41-00 | 1004-1104 |
| CB63 | CIRCUIT BREAKER | SEE E31 | 31-12-50 | 1004-1104 |
| CB631 | CIRCUIT BREAKER | SEE E4 | 23-13-10 | 1004-1104 |
| CB631 | CIRCUIT BREAKER | SEE E4 | 23-13-20 | 1004-1104 |
| CB632 | CIRCUIT BREAKER | SEE E4 | 31-15-10 | 1004-1104 |
| CB633 | CIRCUIT BREAKER | SEE E30 | 23-13-10 | 1004-1104 |
| CB633 | CIRCUIT BREAKER | SEE E30 | 23-13-20 | 1004-1104 |
| CB633 | CIRCUIT BREAKER | SEE E30 | 23-14-00 | 1004-1104 |
| CB636 | CIRCUIT BREAKER | SEE E30 | 31-12-60 | 1004-1104 |
| CB636 | CIRCUIT BREAKER | SEE E30 | 34-54-00 | 1004-1104 |
| CB636 | CIRCUIT BREAKER | SEE E30 | 34-54-20 | 1004-1104 |
| CB636 | CIRCUIT BREAKER | SEE E30 | 34-54-21 | 1004-1104 |
| CB637 | CIRCUIT BREAKER | SEE E31 | 31-12-50 | 1004-1104 |
| CB637 | CIRCUIT BREAKER | SEE E31 | 34-12-00 | 1004-1104 |
| CB638 | CIRCUIT BREAKER | SEE E30 | 31-12-60 | 1004-1104 |
| CB638 | CIRCUIT BREAKER | SEE E30 | 34-21-00 | 1004-1104 |
| CB638 | CIRCUIT BREAKER | SEE E30 | 34-22-00 | 1004-1104 |
| CB639 | CIRCUIT BREAKER | SEE E31 | 31-12-50 | 1004-1104 |
| CB639 | CIRCUIT BREAKER | SEE E31 | 34-21-00 | 1004-1104 |
| CB639 | CIRCUIT BREAKER | SEE E31 | 34-22-00 | 1004-1104 |
| CB639 | CIRCUIT BREAKER | SEE E31 | 34-28-00 | 1004-1104 |
| CB64 | CIRCUIT BREAKER | SEE E30 | 28-41-00 | 1004-1104 |
| CB64 | CIRCUIT BREAKER | SEE E30 | 31-12-60 | 1004-1104 |

| CODE | NOMENCLATURE | LOCATION | MANUAL REF | EFF. |
|---|---|---|---|---|
| CB640 | CIRCUIT BREAKER | SEE E30 | 31-12-60 | 1004-1104 |
| CB640 | CIRCUIT BREAKER | SEE E30 | 34-24-00 | 1004-1104 |
| CB642 | CIRCUIT BREAKER | SEE E30 | 31-12-60 | 1004-1104 |
| CB642 | CIRCUIT BREAKER | SEE E30 | 34-41-00 | 1004-1104 |
| CB643 | CIRCUIT BREAKER | SEE E31 | 23-11-20 | 1004-1104 |
| CB643 | CIRCUIT BREAKER | SEE E31 | 24-61-00 | 1004-1104 |
| CB643 | CIRCUIT BREAKER | SEE E31 | 31-12-50 | 1004-1104 |
| CB645 | CIRCUIT BREAKER | SEE E31 | 31-12-50 | 1004-1104 |
| CB645 | CIRCUIT BREAKER | SEE E31 | 34-12-00 | 1004-1104 |
| CB647 | CIRCUIT BREAKER | SEE E31 | 31-12-50 | 1004-1104 |
| CB647 | CIRCUIT BREAKER | SEE E31 | 34-23-00 | 1004-1104 |
| CB649 | CIRCUIT BREAKER | SEE E31 | 21-22-00 | 1004-1104 |
| CB649 | CIRCUIT BREAKER | SEE E31 | 31-12-50 | 1004-1104 |
| CB649 | CIRCUIT BREAKER | SEE E31 | 34-23-00 | 1004-1104 |
| CB65 | CIRCUIT BREAKER | SEE E31 | 31-12-50 | 1004-1104 |
| CB65 | CIRCUIT BREAKER | SEE E31 | 31-60-00 | 1004-1104 |
| CB651 | CIRCUIT BREAKER | SEE E31 | 31-12-50 | 1004-1104 |
| CB651 | CIRCUIT BREAKER | SEE E31 | 34-23-00 | 1004-1104 |
| CB653 | CIRCUIT BREAKER | SEE E31 | 31-12-50 | 1004-1104 |
| CB653 | CIRCUIT BREAKER | SEE E31 | 34-23-00 | 1004-1104 |
| CB655 | CIRCUIT BREAKER | SEE E31 | 21-22-00 | 1004-1104 |
| CB655 | CIRCUIT BREAKER | SEE E31 | 31-12-50 | 1004-1104 |
| CB655 | CIRCUIT BREAKER | SEE E31 | 34-23-00 | 1004-1104 |
| CB655 | CIRCUIT BREAKER | SEE E31 | 34-44-00 | 1004-1104 |
| CB655 | CIRCUIT BREAKER | SEE E31 | 34-45-00 | 1004-1104 |
| CB657 | CIRCUIT BREAKER | SEE E31 | 31-12-50 | 1004-1104 |
| CB657 | CIRCUIT BREAKER | SEE E31 | 34-23-00 | 1004-1104 |
| CB658 | CIRCUIT BREAKER | SEE E30 | 31-12-60 | 1004-1104 |
| CB658 | CIRCUIT BREAKER | SEE E30 | 34-42-00 | 1004-1104 |
| CB659 | CIRCUIT BREAKER | SEE E31 | 23-50-00 | 1004-1104 |
| CB659 | CIRCUIT BREAKER | SEE E31 | 24-61-00 | 1004-1104 |
| CB659 | CIRCUIT BREAKER | SEE E31 | 31-12-50 | 1004-1104 |
| CB66 | CIRCUIT BREAKER | SEE E31 | 31-12-50 | 1004-1104 |
| CB66 | CIRCUIT BREAKER | SEE E31 | 31-60-00 | 1004-1104 |
| CB661 | CIRCUIT BREAKER | SEE E30 | 34-56-00 | 1004-1104 |
| CB661 | CIRCUIT BREAKER | SEE E30 | 34-59-10 | 1004-1104 |
| CB661 | CIRCUIT BREAKER | SEE E30 | 34-59-20 | 1004-1104 |
| CB661 | CIRCUIT BREAKER | SEE E30 | 34-59-30 | 1004-1104 |
| CB661 | CIRCUIT BREAKER | SEE E30 | 34-59-40 | 1004-1104 |
| CB661 | CIRCUIT BREAKER | SEE E30 | 34-59-60 | 1004-1104 |
| CB661 | CIRCUIT BREAKER | SEE E30 | 34-59-70 | 1004-1104 |

| CODE | NOMENCLATURE | LOCATION | MANUAL REF | EFF. |
|---|---|---|---|---|
| CB661 | CIRCUIT BREAKER | SEE E30 | 34-59-80 | 1004-1104 |
| CB661 | CIRCUIT BREAKER | SEE E30 | 34-59-90 | 1004-1104 |
| CB662 | CIRCUIT BREAKER | SEE E31 | 31-12-50 | 1004-1104 |
| CB662 | CIRCUIT BREAKER | SEE E31 | 34-27-00 | 1004-1104 |
| CB664 | CIRCUIT BREAKER | SEE E30 | 34-55-00 | 1004-1104 |
| CB665 | CIRCUIT BREAKER | SEE E30 | 34-56-10 | 1004-1104 |
| CB665 | CIRCUIT BREAKER | SEE E30 | 34-59-10 | 1004-1104 |
| CB665 | CIRCUIT BREAKER | SEE E30 | 34-59-20 | 1004-1104 |
| CB665 | CIRCUIT BREAKER | SEE E30 | 34-59-30 | 1004-1104 |
| CB665 | CIRCUIT BREAKER | SEE E30 | 34-59-41 | 1004-1104 |
| CB667 | CIRCUIT BREAKER | SEE E30 | 34-56-20 | 1004-1104 |
| CB667 | CIRCUIT BREAKER | SEE E30 | 34-59-10 | 1004-1104 |
| CB667 | CIRCUIT BREAKER | SEE E30 | 34-59-20 | 1004-1104 |
| CB667 | CIRCUIT BREAKER | SEE E30 | 34-59-30 | 1004-1104 |
| CB667 | CIRCUIT BREAKER | SEE E30 | 34-59-40 | 1004-1104 |
| CB667 | CIRCUIT BREAKER | SEE E30 | 34-59-60 | 1004-1104 |
| CB667 | CIRCUIT BREAKER | SEE E30 | 34-59-70 | 1004-1104 |
| CB667 | CIRCUIT BREAKER | SEE E30 | 34-59-80 | 1004-1104 |
| CB667 | CIRCUIT BREAKER | SEE E30 | 34-59-90 | 1004-1104 |
| CB669 | CIRCUIT BREAKER | SEE E1700 | 23-30-00 | 1004-1104 |
| CB67 | CIRCUIT BREAKER | SEE E31 | 31-12-50 | 1004-1104 |
| CB67 | CIRCUIT BREAKER | SEE E31 | 77-11-00 | 1004-1104 |
| CB674 | CIRCUIT BREAKER | SEE E30 | 23-52-00 | 1004-1104 |
| CB675 | CIRCUIT BREAKER | SEE E31 | 23-70-00 | 1004-1104 |
| CB676 | CIRCUIT BREAKER | SEE E31 | 24-64-00 | 1004-1104 |
| CB676 | CIRCUIT BREAKER | SEE E31 | 31-12-50 | 1004-1104 |
| CB68 | CIRCUIT BREAKER | SEE E30 | 31-12-60 | 1004-1104 |
| CB68 | CIRCUIT BREAKER | SEE E30 | 77-11-00 | 1004-1104 |
| CB7 | CIRCUIT BREAKER | SEE E31 | 24-30-00 | 1004-1104 |
| CB7 | CIRCUIT BREAKER | SEE E31 | 31-12-50 | 1004-1104 |
| CB70 | CIRCUIT BREAKER | SEE E30 | 31-12-60 | 1004-1104 |
| CB70 | CIRCUIT BREAKER | SEE E30 | 61-41-00 | 1004-1104 |
| CB708 | CIRCUIT BREAKER | SEE E30 | 25-61-00 | 1004-1104 |
| CB708 | CIRCUIT BREAKER | SEE E30 | 25-63-00 | 1004-1104 |
| CB71 | CIRCUIT BREAKER | SEE E31 | 31-12-50 | 1004-1104 |
| CB71 | CIRCUIT BREAKER | SEE E31 | 61-41-00 | 1004-1104 |
| CB711 | CIRCUIT BREAKER | SEE E31 | 34-10-00 | 1004-1104 |
| CB713 | CIRCUIT BREAKER | SEE E31 | 34-10-00 | 1004-1104 |
| CB714 | CIRCUIT BREAKER | SEE E30 | 34-43-00 | 1004-1104 |
| CB715 | CIRCUIT BREAKER | TBD | 34-44-00 | 1004-1104 |
| CB72 | CIRCUIT BREAKER | SEE E30 | 31-12-60 | 1004-1104 |

| CODE | NOMENCLATURE | LOCATION | MANUAL REF | EFF. |
|---|---|---|---|---|
| CB72 | CIRCUIT BREAKER | SEE E30 | 77-10-00 | 1004-1104 |
| CB73 | CIRCUIT BREAKER | SEE E31 | 31-12-50 | 1004-1104 |
| CB73 | CIRCUIT BREAKER | SEE E31 | 77-10-00 | 1004-1104 |
| CB74 | CIRCUIT BREAKER | SEE E30 | 30-30-00 | 1004-1104 |
| CB74 | CIRCUIT BREAKER | SEE E30 | 30-31-00 | 1004-1104 |
| CB74 | CIRCUIT BREAKER | SEE E30 | 31-12-60 | 1004-1104 |
| CB75 | CIRCUIT BREAKER | SEE E31 | 30-30-00 | 1004-1104 |
| CB75 | CIRCUIT BREAKER | SEE E31 | 31-12-50 | 1004-1104 |
| CB76 | CIRCUIT BREAKER | SEE E31 | 27-32-00 | 1004-1104 |
| CB76 | CIRCUIT BREAKER | SEE E31 | 30-32-00 | 1004-1104 |
| CB76 | CIRCUIT BREAKER | SEE E31 | 31-12-50 | 1004-1104 |
| CB77 | CIRCUIT BREAKER | SEE E30 | 30-22-00 | 1004-1104 |
| CB77 | CIRCUIT BREAKER | SEE E30 | 31-12-60 | 1004-1104 |
| CB78 | CIRCUIT BREAKER | SEE E30 | 21-31-00 | 1004-1104 |
| CB78 | CIRCUIT BREAKER | SEE E30 | 31-12-60 | 1004-1104 |
| CB79 | CIRCUIT BREAKER | SEE E31 | 21-10-00 | 1004-1104 |
| CB79 | CIRCUIT BREAKER | SEE E31 | 21-20-00 | 1004-1104 |
| CB79 | CIRCUIT BREAKER | SEE E31 | 21-40-00 | 1004-1104 |
| CB79 | CIRCUIT BREAKER | SEE E31 | 31-12-50 | 1004-1104 |
| CB8 | CIRCUIT BREAKER | SEE E31 | 24-30-00 | 1004-1104 |
| CB8 | CIRCUIT BREAKER | SEE E31 | 31-12-50 | 1004-1104 |
| CB80 | CIRCUIT BREAKER | SEE E30 | 21-10-00 | 1004-1104 |
| CB80 | CIRCUIT BREAKER | SEE E30 | 21-20-00 | 1004-1104 |
| CB80 | CIRCUIT BREAKER | SEE E30 | 21-40-00 | 1004-1104 |
| CB80 | CIRCUIT BREAKER | SEE E30 | 31-12-60 | 1004-1104 |
| CB81 | CIRCUIT BREAKER | SEE E31 | 21-10-00 | 1004-1104 |
| CB81 | CIRCUIT BREAKER | SEE E31 | 21-20-00 | 1004-1104 |
| CB81 | CIRCUIT BREAKER | SEE E31 | 21-40-00 | 1004-1104 |
| CB81 | CIRCUIT BREAKER | SEE E31 | 31-12-50 | 1004-1104 |
| CB83 | CIRCUIT BREAKER | SEE E31 | 21-10-00 | 1004-1104 |
| CB83 | CIRCUIT BREAKER | SEE E31 | 21-20-00 | 1004-1104 |
| CB83 | CIRCUIT BREAKER | SEE E31 | 21-40-00 | 1004-1104 |
| CB83 | CIRCUIT BREAKER | SEE E31 | 31-12-50 | 1004-1104 |
| CB84 | CIRCUIT BREAKER | SEE E31 | 31-12-50 | 1004-1104 |
| CB84 | CIRCUIT BREAKER | SEE E31 | 33-10-20 | 1004-1104 |
| CB85 | CIRCUIT BREAKER | SEE E31 | 31-12-50 | 1004-1104 |
| CB85 | CIRCUIT BREAKER | SEE E31 | 33-10-10 | 1004-1104 |
| CB87 | CIRCUIT BREAKER | SEE E31 | 27-00-00 | 1004-1104 |
| CB87 | CIRCUIT BREAKER | SEE E31 | 31-12-50 | 1004-1104 |
| CB88 | CIRCUIT BREAKER | SEE E31 | 27-00-00 | 1004-1104 |
| CB88 | CIRCUIT BREAKER | SEE E31 | 31-12-50 | 1004-1104 |

| CODE | NOMENCLATURE | LOCATION | MANUAL REF | EFF. |
|---|---|---|---|---|
| CB89 | CIRCUIT BREAKER | SEE E31 | 27-00-00 | 1004-1104 |
| CB89 | CIRCUIT BREAKER | SEE E31 | 31-12-50 | 1004-1104 |
| CB9 | CIRCUIT BREAKER | SEE E31 | 24-61-00 | 1004-1104 |
| CB9 | CIRCUIT BREAKER | SEE E31 | 31-12-50 | 1004-1104 |
| CB90 | CIRCUIT BREAKER | SEE E31 | 27-00-00 | 1004-1104 |
| CB90 | CIRCUIT BREAKER | SEE E31 | 31-12-50 | 1004-1104 |
| CB91 | CIRCUIT BREAKER | SEE E30 | 27-00-00 | 1004-1104 |
| CB91 | CIRCUIT BREAKER | SEE E30 | 31-12-60 | 1004-1104 |
| CB92 | CIRCUIT BREAKER | SEE E30 | 30-12-00 | 1004-1104 |
| CB92 | CIRCUIT BREAKER | SEE E30 | 31-12-60 | 1004-1104 |
| CB93 | CIRCUIT BREAKER | SEE E31 | 30-12-00 | 1004-1104 |
| CB93 | CIRCUIT BREAKER | SEE E31 | 31-12-50 | 1004-1104 |
| CB95 | CIRCUIT BREAKER | SEE E31 | 30-30-00 | 1004-1104 |
| CB95 | CIRCUIT BREAKER | SEE E31 | 31-12-50 | 1004-1104 |
| CB96 | CIRCUIT BREAKER | SEE E30 | 30-24-00 | 1004-1104 |
| CB96 | CIRCUIT BREAKER | SEE E30 | 31-12-60 | 1004-1104 |
| CB97 | CIRCUIT BREAKER | SEE E31 | 30-24-00 | 1004-1104 |
| CB98 | CIRCUIT BREAKER | SEE E30 | 30-11-00 | 1004-1104 |
| CB98 | CIRCUIT BREAKER | SEE E30 | 31-12-60 | 1004-1104 |
| CB99 | CIRCUIT BREAKER | SEE E31 | 30-11-00 | 1004-1104 |
| CB99 | CIRCUIT BREAKER | SEE E31 | 31-12-50 | 1004-1104 |
| CBR1 | SENSOR-OVERLOAD | SEE E4 | 24-30-00 | 1004-1104 |
| CBR1 | SENSOR-OVERLOAD | SEE E4 | 24-61-00 | 1004-1104 |
| CBR1 | SENSOR-OVERLOAD | SEE E4 | 31-15-10 | 1004-1104 |
| CBR2 | SENSOR-OVERLOAD | SEE E4 | 24-30-00 | 1004-1104 |
| CBR2 | SENSOR-OVERLOAD | SEE E4 | 24-61-00 | 1004-1104 |
| CBR2 | SENSOR-OVERLOAD | SEE E4 | 31-15-10 | 1004-1104 |
| CR1 | DIODE | SEE E31 | 24-61-00 | 1004-1104 |
| CR1 | DIODE | SEE E31 | 31-12-50 | 1004-1104 |
| CR10 | DIODE | SEE E4 | 24-30-00 | 1004-1104 |
| CR10 | DIODE | SEE E4 | 31-15-10 | 1004-1104 |
| CR104 | DIODE | 213 | 27-00-00 | 1004-1104 |
| CR104 | DIODE | 213 | 31-13-21 | 1004-1104 |
| CR106 | DIODE | 214 | 30-11-00 | 1004-1104 |
| CR106 | DIODE | 214 | 31-12-11 | 1004-1104 |
| CR107 | DIODE | 214 | 30-11-00 | 1004-1104 |
| CR107 | DIODE | 214 | 31-12-11 | 1004-1104 |
| CR11 | DIODE | SEE E4 | 24-30-00 | 1004-1104 |
| CR11 | DIODE | SEE E4 | 31-15-10 | 1004-1104 |
| CR110 | DIODE | SEE E50 | 21-60-00 | 1004-1104 |
| CR120 | DIODE | 213 | 27-00-00 | 1004-1104 |

| CODE | NOMENCLATURE | LOCATION | MANUAL REF | EFF. |
|---|---|---|---|---|
| CR120 | DIODE | 213 | 31-13-21 | 1004-1104 |
| CR121 | DIODE | 214 | 29-10-00 | 1004-1104 |
| CR121 | DIODE | 214 | 29-30-00 | 1004-1104 |
| CR121 | DIODE | 214 | 32-30-00 | 1004-1104 |
| CR121 | DIODE | 214 | 32-60-00 | 1004-1104 |
| CR122 | DIODE | 214 | 29-10-00 | 1004-1104 |
| CR122 | DIODE | 214 | 29-30-00 | 1004-1104 |
| CR122 | DIODE | 214 | 32-30-00 | 1004-1104 |
| CR122 | DIODE | 214 | 32-60-00 | 1004-1104 |
| CR123 | DIODE | 214 | 29-10-00 | 1004-1104 |
| CR123 | DIODE | 214 | 29-30-00 | 1004-1104 |
| CR123 | DIODE | 214 | 32-30-00 | 1004-1104 |
| CR123 | DIODE | 214 | 32-60-00 | 1004-1104 |
| CR129 | DIODE | 213 | 27-00-00 | 1004-1104 |
| CR129 | DIODE | 213 | 31-13-21 | 1004-1104 |
| CR13 | DIODE | SEE E4 | 24-30-00 | 1004-1104 |
| CR13 | DIODE | SEE E4 | 31-15-10 | 1004-1104 |
| CR137 | DIODE | 213 | 27-00-00 | 1004-1104 |
| CR137 | DIODE | 213 | 31-13-20 | 1004-1104 |
| CR138 | DIODE | 213 | 27-00-00 | 1004-1104 |
| CR138 | DIODE | 213 | 31-13-20 | 1004-1104 |
| CR139 | DIODE | 213 | 27-00-00 | 1004-1104 |
| CR139 | DIODE | 213 | 31-13-21 | 1004-1104 |
| CR140 | DIODE | 420 | 61-20-00 | 1004-1104 |
| CR141 | DIODE | 410 | 61-20-00 | 1004-1104 |
| CR144 | DIODE | SEE E4 | 31-15-10 | 1004-1104 |
| CR144 | DIODE | SEE E4 | 61-20-00 | 1004-1104 |
| CR145 | DIODE | SEE E4 | 31-15-10 | 1004-1104 |
| CR145 | DIODE | SEE E4 | 61-20-00 | 1004-1104 |
| CR157 | DIODE | 213 | 30-23-00 | 1004-1104 |
| CR157 | DIODE | 213 | 31-13-31 | 1004-1104 |
| CR157 | DIODE | 213 | 79-20-00 | 1004-1104 |
| CR158 | DIODE | 213 | 30-23-00 | 1004-1104 |
| CR158 | DIODE | 213 | 31-13-31 | 1004-1104 |
| CR158 | DIODE | 213 | 79-20-00 | 1004-1104 |
| CR160 | DIODE | 420 | 30-23-00 | 1004-1104 |
| CR160 | DIODE | 420 | 79-20-00 | 1004-1104 |
| CR161 | DIODE | 410 | 30-23-00 | 1004-1104 |
| CR161 | DIODE | 410 | 79-20-00 | 1004-1104 |
| CR163 | DIODE | 214 | 30-40-00 | 1004-1104 |
| CR163 | DIODE | 214 | 31-12-11 | 1004-1104 |

| CODE | NOMENCLATURE | LOCATION | MANUAL REF | EFF. |
|---|---|---|---|---|
| CR164 | DIODE | 214 | 30-40-00 | 1004-1104 |
| CR164 | DIODE | 214 | 31-12-11 | 1004-1104 |
| CR165 | DIODE | 214 | 27-00-00 | 1004-1104 |
| CR165 | DIODE | 214 | 32-51-00 | 1004-1104 |
| CR167 | DIODE | 213 | 27-00-00 | 1004-1104 |
| CR167 | DIODE | 213 | 31-13-20 | 1004-1104 |
| CR168 | DIODE | 213 | 27-00-00 | 1004-1104 |
| CR168 | DIODE | 213 | 31-13-21 | 1004-1104 |
| CR169 | DIODE | 214 | 29-10-00 | 1004-1104 |
| CR169 | DIODE | 214 | 29-30-00 | 1004-1104 |
| CR169 | DIODE | 214 | 32-30-00 | 1004-1104 |
| CR169 | DIODE | 214 | 32-60-00 | 1004-1104 |
| CR177 | DIODE | 214 | 30-11-00 | 1004-1104 |
| CR177 | DIODE | 214 | 31-12-11 | 1004-1104 |
| CR178 | DIODE | 214 | 30-11-00 | 1004-1104 |
| CR178 | DIODE | 214 | 31-12-11 | 1004-1104 |
| CR179 | DIODE | 214 | 30-11-00 | 1004-1104 |
| CR179 | DIODE | 214 | 31-12-11 | 1004-1104 |
| CR180 | DIODE | 214 | 30-11-00 | 1004-1104 |
| CR180 | DIODE | 214 | 31-12-11 | 1004-1104 |
| CR181 | DIODE | 213 | 31-13-31 | 1004-1104 |
| CR181 | DIODE | 213 | 61-20-00 | 1004-1104 |
| CR182 | DIODE | 213 | 31-13-31 | 1004-1104 |
| CR182 | DIODE | 213 | 61-20-00 | 1004-1104 |
| CR184 | DIODE | 214 | 29-10-00 | 1004-1104 |
| CR184 | DIODE | 214 | 29-30-00 | 1004-1104 |
| CR184 | DIODE | 214 | 32-30-00 | 1004-1104 |
| CR184 | DIODE | 214 | 32-60-00 | 1004-1104 |
| CR186 | DIODE | 213 | 27-00-00 | 1004-1104 |
| CR186 | DIODE | 213 | 31-13-21 | 1004-1104 |
| CR187 | DIODE | 213 | 27-00-00 | 1004-1104 |
| CR187 | DIODE | 213 | 31-13-21 | 1004-1104 |
| CR190 | DIODE | 214 | 30-11-00 | 1004-1104 |
| CR190 | DIODE | 214 | 31-12-11 | 1004-1104 |
| CR191 | DIODE | 214 | 30-11-00 | 1004-1104 |
| CR191 | DIODE | 214 | 31-12-11 | 1004-1104 |
| CR192 | DIODE | 214 | 29-10-00 | 1004-1104 |
| CR192 | DIODE | 214 | 29-30-00 | 1004-1104 |
| CR192 | DIODE | 214 | 32-30-00 | 1004-1104 |
| CR192 | DIODE | 214 | 32-60-00 | 1004-1104 |
| CR193 | DIODE | 214 | 29-10-00 | 1004-1104 |

| CODE | NOMENCLATURE | LOCATION | MANUAL REF | EFF. |
|---|---|---|---|---|
| CR193 | DIODE | 214 | 29-30-00 | 1004-1104 |
| CR193 | DIODE | 214 | 32-30-00 | 1004-1104 |
| CR193 | DIODE | 214 | 32-43-00 | 1004-1104 |
| CR193 | DIODE | 214 | 32-60-00 | 1004-1104 |
| CR194 | DIODE | 214 | 29-10-00 | 1004-1104 |
| CR194 | DIODE | 214 | 29-30-00 | 1004-1104 |
| CR194 | DIODE | 214 | 32-30-00 | 1004-1104 |
| CR194 | DIODE | 214 | 32-60-00 | 1004-1104 |
| CR195 | DIODE | 214 | 29-10-00 | 1004-1104 |
| CR195 | DIODE | 214 | 29-30-00 | 1004-1104 |
| CR195 | DIODE | 214 | 32-30-00 | 1004-1104 |
| CR195 | DIODE | 214 | 32-43-00 | 1004-1104 |
| CR195 | DIODE | 214 | 32-60-00 | 1004-1104 |
| CR196 | DIODE | 213 | 27-00-00 | 1004-1104 |
| CR196 | DIODE | 213 | 31-13-21 | 1004-1104 |
| CR197 | DIODE | 213 | 27-00-00 | 1004-1104 |
| CR197 | DIODE | 213 | 31-13-21 | 1004-1104 |
| CR198 | DIODE | 213 | 27-00-00 | 1004-1104 |
| CR198 | DIODE | 213 | 31-13-21 | 1004-1104 |
| CR2 | DIODE | SEE E31 | 24-61-00 | 1004-1104 |
| CR2 | DIODE | SEE E31 | 31-12-50 | 1004-1104 |
| CR200 | DIODE | 224 | 30-80-00 | 1004-1104 |
| CR200 | DIODE | 224 | 31-19-11 | 1004-1104 |
| CR201 | DIODE | 224 | 30-80-00 | 1004-1104 |
| CR201 | DIODE | 224 | 31-19-11 | 1004-1104 |
| CR202 | DIODE | 224 | 30-80-00 | 1004-1104 |
| CR202 | DIODE | 224 | 31-19-11 | 1004-1104 |
| CR203 | DIODE | 224 | 30-80-00 | 1004-1104 |
| CR203 | DIODE | 224 | 31-19-11 | 1004-1104 |
| CR204 | DIODE | 224 | 30-80-00 | 1004-1104 |
| CR204 | DIODE | 224 | 31-19-11 | 1004-1104 |
| CR205 | DIODE | 224 | 30-80-00 | 1004-1104 |
| CR205 | DIODE | 224 | 31-19-11 | 1004-1104 |
| CR206 | DIODE | 224 | 30-80-00 | 1004-1104 |
| CR206 | DIODE | 224 | 31-19-11 | 1004-1104 |
| CR207 | DIODE | 224 | 30-80-00 | 1004-1104 |
| CR207 | DIODE | 224 | 31-19-11 | 1004-1104 |
| CR208 | DIODE | 224 | 30-80-00 | 1004-1104 |
| CR208 | DIODE | 224 | 31-19-11 | 1004-1104 |
| CR209 | DIODE | 224 | 30-80-00 | 1004-1104 |
| CR209 | DIODE | 224 | 31-19-11 | 1004-1104 |

| CODE | NOMENCLATURE | LOCATION | MANUAL REF | EFF. |
|---|---|---|---|---|
| CR210 | DIODE | 224 | 30-80-00 | 1004-1104 |
| CR210 | DIODE | 224 | 31-19-11 | 1004-1104 |
| CR211 | DIODE | 224 | 30-80-00 | 1004-1104 |
| CR211 | DIODE | 224 | 31-19-11 | 1004-1104 |
| CR217 | DIODE | SEE TB42 | 21-52-00 | 1004-1104 |
| CR217 | DIODE | SEE TB45 | 21-52-00 | 1004-1104 |
| CR218 | DIODE | SEE TB42 | 21-52-00 | 1004-1104 |
| CR218 | DIODE | SEE TB45 | 21-52-00 | 1004-1104 |
| CR229 | DIODE | SEE E40 | 21-10-00 | 1004-1104 |
| CR229 | DIODE | SEE E40 | 21-20-00 | 1004-1104 |
| CR229 | DIODE | SEE E40 | 21-40-00 | 1004-1104 |
| CR229 | DIODE | SEE E40 | 21-52-00 | 1004-1104 |
| CR229 | DIODE | SEE E40 | 31-12-30 | 1004-1104 |
| CR23 | DIODE | SEE E4 | 24-30-00 | 1004-1104 |
| CR23 | DIODE | SEE E4 | 31-15-10 | 1004-1104 |
| CR230 | DIODE | SEE PCB30 | 29-10-00 | 1004-1104 |
| CR230 | DIODE | SEE PCB30 | 29-30-00 | 1004-1104 |
| CR230 | DIODE | SEE PCB30 | 32-30-00 | 1004-1104 |
| CR230 | DIODE | SEE PCB30 | 32-60-00 | 1004-1104 |
| CR231 | ZENER DIODE | SEE PCB30 | 29-10-00 | 1004-1104 |
| CR231 | ZENER DIODE | SEE PCB30 | 29-30-00 | 1004-1104 |
| CR231 | ZENER DIODE | SEE PCB30 | 32-30-00 | 1004-1104 |
| CR231 | ZENER DIODE | SEE PCB30 | 32-60-00 | 1004-1104 |
| CR232 | SUPPRESOR DIODE | SEE PCB30 | 29-10-00 | 1004-1104 |
| CR232 | SUPPRESOR DIODE | SEE PCB30 | 29-30-00 | 1004-1104 |
| CR232 | SUPPRESOR DIODE | SEE PCB30 | 32-30-00 | 1004-1104 |
| CR232 | SUPPRESOR DIODE | SEE PCB30 | 32-60-00 | 1004-1104 |
| CR27 | DIODE | 213 | 28-20-00 | 1004-1104 |
| CR27 | DIODE | 213 | 31-13-11 | 1004-1104 |
| CR28 | DIODE | 213 | 28-20-00 | 1004-1104 |
| CR28 | DIODE | 213 | 31-13-11 | 1004-1104 |
| CR3 | DIODE | SEE E31 | 24-61-00 | 1004-1104 |
| CR3 | DIODE | SEE E31 | 31-12-50 | 1004-1104 |
| CR30 | DIODE | 213 | 28-20-00 | 1004-1104 |
| CR30 | DIODE | 213 | 31-13-11 | 1004-1104 |
| CR34 | DIODE | 214 | 31-12-10 | 1004-1104 |
| CR34 | DIODE | 214 | 33-26-00 | 1004-1104 |
| CR35 | DIODE | SEE PCB6 | 21-10-00 | 1004-1104 |
| CR35 | DIODE | SEE PCB6 | 21-20-00 | 1004-1104 |
| CR35 | DIODE | SEE PCB6 | 21-40-00 | 1004-1104 |
| CR36 | DIODE | SEE PCB6 | 21-10-00 | 1004-1104 |

| CODE | NOMENCLATURE | LOCATION | MANUAL REF | EFF. |
|---|---|---|---|---|
| CR36 | DIODE | SEE PCB6 | 21-20-00 | 1004-1104 |
| CR36 | DIODE | SEE PCB6 | 21-40-00 | 1004-1104 |
| CR4 | DIODE | SEE E30 | 24-61-00 | 1004-1104 |
| CR4 | DIODE | SEE E30 | 31-12-60 | 1004-1104 |
| CR49 | DIODE | 213 | 27-00-00 | 1004-1104 |
| CR49 | DIODE | 213 | 31-13-21 | 1004-1104 |
| CR5 | DIODE | SEE E31 | 24-61-00 | 1004-1104 |
| CR5 | DIODE | SEE E31 | 31-12-50 | 1004-1104 |
| CR50 | DIODE | 213 | 27-00-00 | 1004-1104 |
| CR50 | DIODE | 213 | 31-13-21 | 1004-1104 |
| CR51 | DIODE | 213 | 27-00-00 | 1004-1104 |
| CR51 | DIODE | 213 | 31-13-21 | 1004-1104 |
| CR52 | DIODE | 213 | 27-00-00 | 1004-1104 |
| CR52 | DIODE | 213 | 31-13-21 | 1004-1104 |
| CR53 | DIODE | 213 | 27-00-00 | 1004-1104 |
| CR53 | DIODE | 213 | 31-13-21 | 1004-1104 |
| CR56 | DIODE | 114 | 30-12-00 | 1004-1104 |
| CR57 | DIODE | 113 | 30-12-00 | 1004-1104 |
| CR58 | DIODE | 214 | 30-12-00 | 1004-1104 |
| CR58 | DIODE | 214 | 31-12-11 | 1004-1104 |
| CR59 | DIODE | 214 | 30-12-00 | 1004-1104 |
| CR59 | DIODE | 214 | 31-12-11 | 1004-1104 |
| CR6 | DIODE | SEE E30 | 24-61-00 | 1004-1104 |
| CR6 | DIODE | SEE E30 | 31-12-60 | 1004-1104 |
| CR600 | DIODE | SEE AE754 | 31-14-11 | 1004-1104 |
| CR600 | DIODE | SEE AE754 | 31-14-40 | 1004-1104 |
| CR600 | DIODE | SEE AE754 | 34-24-00 | 1004-1104 |
| CR604 | DIODE | SEE AE754 | 22-11-00 | 1004-1104 |
| CR604 | DIODE | SEE AE754 | 31-14-10 | 1004-1104 |
| CR604 | DIODE | SEE AE754 | 31-14-20 | 1004-1104 |
| CR604 | DIODE | SEE AE754 | 31-14-30 | 1004-1104 |
| CR604 | DIODE | SEE AE754 | 31-14-40 | 1004-1104 |
| CR604 | DIODE | SEE AE754 | 34-24-00 | 1004-1104 |
| CR608 | DIODE | SEE AE754 | 31-14-16 | 1004-1104 |
| CR608 | DIODE | SEE AE754 | 34-55-00 | 1004-1104 |
| CR609 | DIODE | SEE AE754 | 31-14-17 | 1004-1104 |
| CR609 | DIODE | SEE AE754 | 34-55-00 | 1004-1104 |
| CR610 | DIODE | SEE AE754 | 31-14-17 | 1004-1104 |
| CR610 | DIODE | SEE AE754 | 34-55-00 | 1004-1104 |
| CR611 | DIODE | SEE AE754 | 31-14-17 | 1004-1104 |
| CR611 | DIODE | SEE AE754 | 34-55-00 | 1004-1104 |

| CODE | NOMENCLATURE | LOCATION | MANUAL REF | EFF. |
|---|---|---|---|---|
| CR612 | DIODE | SEE AE754 | 31-14-11 | 1004-1104 |
| CR612 | DIODE | SEE AE754 | 31-14-40 | 1004-1104 |
| CR612 | DIODE | SEE AE754 | 34-23-00 | 1004-1104 |
| CR614 | DIODE | SEE AE754 | 31-14-11 | 1004-1104 |
| CR614 | DIODE | SEE AE754 | 31-14-40 | 1004-1104 |
| CR614 | DIODE | SEE AE754 | 34-23-00 | 1004-1104 |
| CR616 | DIODE | SEE AE754 | 31-14-11 | 1004-1104 |
| CR616 | DIODE | SEE AE754 | 31-14-40 | 1004-1104 |
| CR616 | DIODE | SEE AE754 | 34-51-00 | 1004-1104 |
| CR616 | DIODE | SEE AE754 | 34-52-00 | 1004-1104 |
| CR618 | DIODE | SEE AE754 | 31-14-11 | 1004-1104 |
| CR618 | DIODE | SEE AE754 | 31-14-40 | 1004-1104 |
| CR618 | DIODE | SEE AE754 | 34-51-00 | 1004-1104 |
| CR618 | DIODE | SEE AE754 | 34-52-00 | 1004-1104 |
| CR622 | DIODE | SEE AE754 | 31-14-40 | 1004-1104 |
| CR622 | DIODE | SEE AE754 | 34-12-00 | 1004-1104 |
| CR634 | DIODE | SEE AE754 | 22-11-00 | 1004-1104 |
| CR634 | DIODE | SEE AE754 | 31-14-10 | 1004-1104 |
| CR634 | DIODE | SEE AE754 | 31-14-30 | 1004-1104 |
| CR634 | DIODE | SEE AE754 | 31-14-40 | 1004-1104 |
| CR636 | DIODE | SEE AE754 | 22-11-00 | 1004-1104 |
| CR636 | DIODE | SEE AE754 | 31-14-10 | 1004-1104 |
| CR636 | DIODE | SEE AE754 | 31-14-20 | 1004-1104 |
| CR636 | DIODE | SEE AE754 | 31-14-30 | 1004-1104 |
| CR636 | DIODE | SEE AE754 | 31-14-40 | 1004-1104 |
| CR640 | DIODE | SEE AE713 | 34-10-00 | 1004-1104 |
| CR640 | DIODE | SEE AE713 | 34-10-10 | 1004-1104 |
| CR640 | DIODE | SEE AE713 | 34-56-00 | 1004-1104 |
| CR640 | DIODE | SEE AE713 | 34-59-10 | 1004-1104 |
| CR640 | DIODE | SEE AE713 | 34-59-20 | 1004-1104 |
| CR640 | DIODE | SEE AE713 | 34-59-30 | 1004-1104 |
| CR640 | DIODE | SEE AE713 | 34-59-40 | 1004-1104 |
| CR640 | DIODE | SEE AE713 | 34-59-60 | 1004-1104 |
| CR640 | DIODE | SEE AE713 | 34-59-70 | 1004-1104 |
| CR640 | DIODE | SEE AE713 | 34-59-80 | 1004-1104 |
| CR640 | DIODE | SEE AE713 | 34-59-90 | 1004-1104 |
| CR641 | DIODE | SEE AE713 | 34-10-00 | 1004-1104 |
| CR641 | DIODE | SEE AE713 | 34-10-10 | 1004-1104 |
| CR641 | DIODE | SEE AE713 | 34-56-00 | 1004-1104 |
| CR641 | DIODE | SEE AE713 | 34-59-10 | 1004-1104 |
| CR641 | DIODE | SEE AE713 | 34-59-20 | 1004-1104 |

| CODE | NOMENCLATURE | LOCATION | MANUAL REF | EFF. |
|---|---|---|---|---|
| CR641 | DIODE | SEE AE713 | 34-59-30 | 1004-1104 |
| CR641 | DIODE | SEE AE713 | 34-59-40 | 1004-1104 |
| CR641 | DIODE | SEE AE713 | 34-59-60 | 1004-1104 |
| CR641 | DIODE | SEE AE713 | 34-59-70 | 1004-1104 |
| CR641 | DIODE | SEE AE713 | 34-59-80 | 1004-1104 |
| CR641 | DIODE | SEE AE713 | 34-59-90 | 1004-1104 |
| CR642 | DIODE | SEE AE713 | 34-10-00 | 1004-1104 |
| CR642 | DIODE | SEE AE713 | 34-10-10 | 1004-1104 |
| CR642 | DIODE | SEE AE713 | 34-56-00 | 1004-1104 |
| CR642 | DIODE | SEE AE713 | 34-59-10 | 1004-1104 |
| CR642 | DIODE | SEE AE713 | 34-59-20 | 1004-1104 |
| CR642 | DIODE | SEE AE713 | 34-59-30 | 1004-1104 |
| CR642 | DIODE | SEE AE713 | 34-59-40 | 1004-1104 |
| CR642 | DIODE | SEE AE713 | 34-59-60 | 1004-1104 |
| CR642 | DIODE | SEE AE713 | 34-59-70 | 1004-1104 |
| CR642 | DIODE | SEE AE713 | 34-59-80 | 1004-1104 |
| CR642 | DIODE | SEE AE713 | 34-59-90 | 1004-1104 |
| CR643 | DIODE | SEE AE713 | 34-10-00 | 1004-1104 |
| CR643 | DIODE | SEE AE713 | 34-10-10 | 1004-1104 |
| CR643 | DIODE | SEE AE713 | 34-56-00 | 1004-1104 |
| CR643 | DIODE | SEE AE713 | 34-59-10 | 1004-1104 |
| CR643 | DIODE | SEE AE713 | 34-59-20 | 1004-1104 |
| CR643 | DIODE | SEE AE713 | 34-59-30 | 1004-1104 |
| CR643 | DIODE | SEE AE713 | 34-59-40 | 1004-1104 |
| CR643 | DIODE | SEE AE713 | 34-59-60 | 1004-1104 |
| CR643 | DIODE | SEE AE713 | 34-59-70 | 1004-1104 |
| CR643 | DIODE | SEE AE713 | 34-59-80 | 1004-1104 |
| CR643 | DIODE | SEE AE713 | 34-59-90 | 1004-1104 |
| CR644 | DIODE | SEE AE713 | 34-56-00 | 1004-1104 |
| CR644 | DIODE | SEE AE713 | 34-59-10 | 1004-1104 |
| CR644 | DIODE | SEE AE713 | 34-59-20 | 1004-1104 |
| CR644 | DIODE | SEE AE713 | 34-59-30 | 1004-1104 |
| CR644 | DIODE | SEE AE713 | 34-59-40 | 1004-1104 |
| CR644 | DIODE | SEE AE713 | 34-59-60 | 1004-1104 |
| CR644 | DIODE | SEE AE713 | 34-59-70 | 1004-1104 |
| CR644 | DIODE | SEE AE713 | 34-59-80 | 1004-1104 |
| CR644 | DIODE | SEE AE713 | 34-59-90 | 1004-1104 |
| CR645 | DIODE | SEE AE713 | 34-56-00 | 1004-1104 |
| CR645 | DIODE | SEE AE713 | 34-59-10 | 1004-1104 |
| CR645 | DIODE | SEE AE713 | 34-59-20 | 1004-1104 |
| CR645 | DIODE | SEE AE713 | 34-59-30 | 1004-1104 |

| CODE | NOMENCLATURE | LOCATION | MANUAL REF | EFF. |
|---|---|---|---|---|
| CR645 | DIODE | SEE AE713 | 34-59-40 | 1004-1104 |
| CR645 | DIODE | SEE AE713 | 34-59-60 | 1004-1104 |
| CR645 | DIODE | SEE AE713 | 34-59-70 | 1004-1104 |
| CR645 | DIODE | SEE AE713 | 34-59-80 | 1004-1104 |
| CR645 | DIODE | SEE AE713 | 34-59-90 | 1004-1104 |
| CR646 | DIODE | SEE AE713 | 34-10-00 | 1004-1104 |
| CR646 | DIODE | SEE AE713 | 34-10-10 | 1004-1104 |
| CR646 | DIODE | SEE AE713 | 34-56-00 | 1004-1104 |
| CR646 | DIODE | SEE AE713 | 34-59-10 | 1004-1104 |
| CR646 | DIODE | SEE AE713 | 34-59-20 | 1004-1104 |
| CR646 | DIODE | SEE AE713 | 34-59-30 | 1004-1104 |
| CR646 | DIODE | SEE AE713 | 34-59-40 | 1004-1104 |
| CR646 | DIODE | SEE AE713 | 34-59-60 | 1004-1104 |
| CR646 | DIODE | SEE AE713 | 34-59-70 | 1004-1104 |
| CR646 | DIODE | SEE AE713 | 34-59-80 | 1004-1104 |
| CR646 | DIODE | SEE AE713 | 34-59-90 | 1004-1104 |
| CR647 | DIODE | SEE AE713 | 34-10-00 | 1004-1104 |
| CR647 | DIODE | SEE AE713 | 34-10-10 | 1004-1104 |
| CR647 | DIODE | SEE AE713 | 34-56-00 | 1004-1104 |
| CR647 | DIODE | SEE AE713 | 34-59-10 | 1004-1104 |
| CR647 | DIODE | SEE AE713 | 34-59-20 | 1004-1104 |
| CR647 | DIODE | SEE AE713 | 34-59-30 | 1004-1104 |
| CR647 | DIODE | SEE AE713 | 34-59-40 | 1004-1104 |
| CR647 | DIODE | SEE AE713 | 34-59-60 | 1004-1104 |
| CR647 | DIODE | SEE AE713 | 34-59-70 | 1004-1104 |
| CR647 | DIODE | SEE AE713 | 34-59-80 | 1004-1104 |
| CR647 | DIODE | SEE AE713 | 34-59-90 | 1004-1104 |
| CR648 | DIODE | SEE AE713 | 34-10-00 | 1004-1104 |
| CR648 | DIODE | SEE AE713 | 34-10-10 | 1004-1104 |
| CR648 | DIODE | SEE AE713 | 34-56-00 | 1004-1104 |
| CR648 | DIODE | SEE AE713 | 34-59-10 | 1004-1104 |
| CR648 | DIODE | SEE AE713 | 34-59-20 | 1004-1104 |
| CR648 | DIODE | SEE AE713 | 34-59-30 | 1004-1104 |
| CR648 | DIODE | SEE AE713 | 34-59-40 | 1004-1104 |
| CR648 | DIODE | SEE AE713 | 34-59-60 | 1004-1104 |
| CR648 | DIODE | SEE AE713 | 34-59-70 | 1004-1104 |
| CR648 | DIODE | SEE AE713 | 34-59-80 | 1004-1104 |
| CR648 | DIODE | SEE AE713 | 34-59-90 | 1004-1104 |
| CR649 | DIODE | SEE AE713 | 34-10-00 | 1004-1104 |
| CR649 | DIODE | SEE AE713 | 34-10-10 | 1004-1104 |
| CR649 | DIODE | SEE AE713 | 34-56-00 | 1004-1104 |

| CODE | NOMENCLATURE | LOCATION | MANUAL REF | EFF. |
|---|---|---|---|---|
| CR649 | DIODE | SEE AE713 | 34-59-10 | 1004-1104 |
| CR649 | DIODE | SEE AE713 | 34-59-20 | 1004-1104 |
| CR649 | DIODE | SEE AE713 | 34-59-30 | 1004-1104 |
| CR649 | DIODE | SEE AE713 | 34-59-40 | 1004-1104 |
| CR649 | DIODE | SEE AE713 | 34-59-60 | 1004-1104 |
| CR649 | DIODE | SEE AE713 | 34-59-70 | 1004-1104 |
| CR649 | DIODE | SEE AE713 | 34-59-80 | 1004-1104 |
| CR649 | DIODE | SEE AE713 | 34-59-90 | 1004-1104 |
| CR650 | DIODE | SEE AE713 | 34-10-00 | 1004-1104 |
| CR650 | DIODE | SEE AE713 | 34-10-10 | 1004-1104 |
| CR650 | DIODE | SEE AE713 | 34-56-00 | 1004-1104 |
| CR650 | DIODE | SEE AE713 | 34-59-10 | 1004-1104 |
| CR650 | DIODE | SEE AE713 | 34-59-30 | 1004-1104 |
| CR650 | DIODE | SEE AE713 | 34-59-40 | 1004-1104 |
| CR650 | DIODE | SEE AE713 | 34-59-60 | 1004-1104 |
| CR650 | DIODE | SEE AE713 | 34-59-70 | 1004-1104 |
| CR650 | DIODE | SEE AE713 | 34-59-80 | 1004-1104 |
| CR650 | DIODE | SEE AE713 | 34-59-90 | 1004-1104 |
| CR651 | DIODE | SEE AE713 | 34-10-00 | 1004-1104 |
| CR651 | DIODE | SEE AE713 | 34-10-10 | 1004-1104 |
| CR651 | DIODE | SEE AE713 | 34-56-00 | 1004-1104 |
| CR651 | DIODE | SEE AE713 | 34-59-10 | 1004-1104 |
| CR651 | DIODE | SEE AE713 | 34-59-30 | 1004-1104 |
| CR651 | DIODE | SEE AE713 | 34-59-40 | 1004-1104 |
| CR651 | DIODE | SEE AE713 | 34-59-60 | 1004-1104 |
| CR651 | DIODE | SEE AE713 | 34-59-70 | 1004-1104 |
| CR651 | DIODE | SEE AE713 | 34-59-80 | 1004-1104 |
| CR651 | DIODE | SEE AE713 | 34-59-90 | 1004-1104 |
| CR652 | DIODE | SEE AE713 | 34-10-00 | 1004-1104 |
| CR652 | DIODE | SEE AE713 | 34-10-10 | 1004-1104 |
| CR652 | DIODE | SEE AE713 | 34-56-00 | 1004-1104 |
| CR652 | DIODE | SEE AE713 | 34-59-10 | 1004-1104 |
| CR652 | DIODE | SEE AE713 | 34-59-20 | 1004-1104 |
| CR652 | DIODE | SEE AE713 | 34-59-30 | 1004-1104 |
| CR652 | DIODE | SEE AE713 | 34-59-40 | 1004-1104 |
| CR652 | DIODE | SEE AE713 | 34-59-60 | 1004-1104 |
| CR652 | DIODE | SEE AE713 | 34-59-70 | 1004-1104 |
| CR652 | DIODE | SEE AE713 | 34-59-80 | 1004-1104 |
| CR652 | DIODE | SEE AE713 | 34-59-90 | 1004-1104 |
| CR653 | ZENER DIODE | 232 | 34-10-00 | 1004-1104 |
| CR653 | ZENER DIODE | 232 | 34-10-10 | 1004-1104 |

| CODE | NOMENCLATURE | LOCATION | MANUAL REF | EFF. |
|---|---|---|---|---|
| CR653 | ZENER DIODE | 232 | 34-56-00 | 1004-1104 |
| CR653 | ZENER DIODE | 232 | 34-59-10 | 1004-1104 |
| CR653 | ZENER DIODE | 232 | 34-59-20 | 1004-1104 |
| CR653 | ZENER DIODE | 232 | 34-59-30 | 1004-1104 |
| CR653 | ZENER DIODE | 232 | 34-59-40 | 1004-1104 |
| CR653 | ZENER DIODE | 232 | 34-59-60 | 1004-1104 |
| CR653 | ZENER DIODE | 232 | 34-59-70 | 1004-1104 |
| CR653 | ZENER DIODE | 232 | 34-59-80 | 1004-1104 |
| CR653 | ZENER DIODE | 232 | 34-59-90 | 1004-1104 |
| CR654 | DIODE | 111 | 34-56-00 | 1004-1104 |
| CR655 | DIODE | 111 | 34-56-00 | 1004-1104 |
| CR656 | DIODE | 213 | 34-59-10 | 1004-1104 |
| CR656 | DIODE | 213 | 34-59-20 | 1004-1104 |
| CR656 | DIODE | 213 | 34-59-30 | 1004-1104 |
| CR657 | DIODE | 113 | 34-59-10 | 1004-1104 |
| CR657 | DIODE | 113 | 34-59-20 | 1004-1104 |
| CR657 | DIODE | 113 | 34-59-30 | 1004-1104 |
| CR658 | DIODE | 111 | 31-14-18 | 1004-1104 |
| CR658 | DIODE | 111 | 31-14-30 | 1004-1104 |
| CR658 | DIODE | 111 | 34-59-10 | 1004-1104 |
| CR658 | DIODE | 111 | 34-59-20 | 1004-1104 |
| CR658 | DIODE | 111 | 34-59-30 | 1004-1104 |
| CR658 | DIODE | 111 | 34-59-40 | 1004-1104 |
| CR658 | DIODE | 111 | 34-59-60 | 1004-1104 |
| CR658 | DIODE | 111 | 34-59-70 | 1004-1104 |
| CR658 | DIODE | 111 | 34-59-80 | 1004-1104 |
| CR658 | DIODE | 111 | 34-59-90 | 1004-1104 |
| CR659 | DIODE | 111 | 31-14-18 | 1004-1104 |
| CR659 | DIODE | 111 | 31-14-30 | 1004-1104 |
| CR659 | DIODE | 111 | 34-59-10 | 1004-1104 |
| CR659 | DIODE | 111 | 34-59-20 | 1004-1104 |
| CR659 | DIODE | 111 | 34-59-30 | 1004-1104 |
| CR659 | DIODE | 111 | 34-59-40 | 1004-1104 |
| CR659 | DIODE | 111 | 34-59-60 | 1004-1104 |
| CR659 | DIODE | 111 | 34-59-70 | 1004-1104 |
| CR659 | DIODE | 111 | 34-59-80 | 1004-1104 |
| CR659 | DIODE | 111 | 34-59-90 | 1004-1104 |
| CR66 | DIODE | 214 | 29-10-00 | 1004-1104 |
| CR66 | DIODE | 214 | 29-30-00 | 1004-1104 |
| CR66 | DIODE | 214 | 32-30-00 | 1004-1104 |
| CR66 | DIODE | 214 | 32-60-00 | 1004-1104 |

| CODE | NOMENCLATURE | LOCATION | MANUAL REF | EFF. |
|---|---|---|---|---|
| CR660 | DIODE | 111 | 31-14-14 | 1004-1104 |
| CR660 | DIODE | 111 | 34-54-20 | 1004-1104 |
| CR660 | DIODE | 111 | 34-59-10 | 1004-1104 |
| CR660 | DIODE | 111 | 34-59-30 | 1004-1104 |
| CR661 | DIODE | 111 | 31-14-14 | 1004-1104 |
| CR661 | DIODE | 111 | 31-14-18 | 1004-1104 |
| CR661 | DIODE | 111 | 31-14-30 | 1004-1104 |
| CR661 | DIODE | 111 | 31-14-40 | 1004-1104 |
| CR661 | DIODE | 111 | 34-59-10 | 1004-1104 |
| CR661 | DIODE | 111 | 34-59-20 | 1004-1104 |
| CR661 | DIODE | 111 | 34-59-30 | 1004-1104 |
| CR661 | DIODE | 111 | 34-59-40 | 1004-1104 |
| CR661 | DIODE | 111 | 34-59-60 | 1004-1104 |
| CR661 | DIODE | 111 | 34-59-70 | 1004-1104 |
| CR661 | DIODE | 111 | 34-59-80 | 1004-1104 |
| CR661 | DIODE | 111 | 34-59-90 | 1004-1104 |
| CR662 | ZENER DIODE | SEE PC20 | 22-11-00 | 1004-1104 |
| CR663 | ZENER DIODE | SEE PC20 | 22-11-00 | 1004-1104 |
| CR664 | DIODE | SEE PC20 | 22-11-00 | 1004-1104 |
| CR665 | DIODE | SEE PC20 | 22-11-00 | 1004-1104 |
| CR666 | DIODE | SEE PC20 | 22-11-00 | 1004-1104 |
| CR667 | DIODE | SEE PC20 | 22-11-00 | 1004-1104 |
| CR668 | DIODE | SEE PC20 | 22-11-00 | 1004-1104 |
| CR669 | DIODE | SEE PC20 | 22-11-00 | 1004-1104 |
| CR67 | DIODE | 214 | 29-10-00 | 1004-1104 |
| CR67 | DIODE | 214 | 29-30-00 | 1004-1104 |
| CR67 | DIODE | 214 | 32-30-00 | 1004-1104 |
| CR67 | DIODE | 214 | 32-60-00 | 1004-1104 |
| CR670 | DIODE | SEE PC20 | 22-11-00 | 1004-1104 |
| CR671 | DIODE | SEE PC20 | 22-11-00 | 1004-1104 |
| CR672 | DIODE | SEE PC20 | 22-11-00 | 1004-1104 |
| CR673 | DIODE | SEE PC20 | 22-11-00 | 1004-1104 |
| CR674 | DIODE | SEE PC20 | 22-11-00 | 1004-1104 |
| CR675 | DIODE | SEE PC20 | 22-11-00 | 1004-1104 |
| CR676 | DIODE | SEE PC20 | 22-11-00 | 1004-1104 |
| CR677 | DIODE | SEE PC20 | 22-11-00 | 1004-1104 |
| CR678 | DIODE | SEE PC20 | 22-11-00 | 1004-1104 |
| CR679 | DIODE | SEE PC21 | 22-11-00 | 1004-1104 |
| CR679 | DIODE | SEE PC21 | 31-14-20 | 1004-1104 |
| CR679 | DIODE | SEE PC21 | 31-14-30 | 1004-1104 |
| CR68 | DIODE | 214 | 29-10-00 | 1004-1104 |

| CODE | NOMENCLATURE | LOCATION | MANUAL REF | EFF. |
|---|---|---|---|---|
| CR68 | DIODE | 214 | 29-30-00 | 1004-1104 |
| CR68 | DIODE | 214 | 32-30-00 | 1004-1104 |
| CR68 | DIODE | 214 | 32-60-00 | 1004-1104 |
| CR680 | DIODE | 111 | 31-14-18 | 1004-1104 |
| CR680 | DIODE | 111 | 31-14-30 | 1004-1104 |
| CR680 | DIODE | 111 | 34-59-10 | 1004-1104 |
| CR680 | DIODE | 111 | 34-59-20 | 1004-1104 |
| CR680 | DIODE | 111 | 34-59-30 | 1004-1104 |
| CR680 | DIODE | 111 | 34-59-40 | 1004-1104 |
| CR680 | DIODE | 111 | 34-59-60 | 1004-1104 |
| CR680 | DIODE | 111 | 34-59-70 | 1004-1104 |
| CR680 | DIODE | 111 | 34-59-80 | 1004-1104 |
| CR680 | DIODE | 111 | 34-59-90 | 1004-1104 |
| CR681 | DIODE | SEE K640 | 23-30-00 | 1004-1104 |
| CR682 | DIODE | 111 | 31-14-18 | 1004-1104 |
| CR682 | DIODE | 111 | 31-14-30 | 1004-1104 |
| CR682 | DIODE | 111 | 31-14-40 | 1004-1104 |
| CR683 | DIODE | 111 | 31-14-18 | 1004-1104 |
| CR683 | DIODE | 111 | 31-14-30 | 1004-1104 |
| CR683 | DIODE | 111 | 31-14-40 | 1004-1104 |
| CR684 | DIODE | 111 | 31-14-18 | 1004-1104 |
| CR684 | DIODE | 111 | 31-14-30 | 1004-1104 |
| CR685 | DIODE | 111 | 31-14-18 | 1004-1104 |
| CR685 | DIODE | 111 | 31-14-30 | 1004-1104 |
| CR686 | DIODE | 111 | 31-14-18 | 1004-1104 |
| CR686 | DIODE | 111 | 31-14-30 | 1004-1104 |
| CR687 | DIODE | 111 | 31-14-18 | 1004-1104 |
| CR687 | DIODE | 111 | 31-14-30 | 1004-1104 |
| CR688 | DIODE | 111 | 31-14-18 | 1004-1104 |
| CR688 | DIODE | 111 | 31-14-30 | 1004-1104 |
| CR689 | DIODE | 111 | 31-14-18 | 1004-1104 |
| CR689 | DIODE | 111 | 31-14-30 | 1004-1104 |
| CR69 | DIODE | 214 | 29-10-00 | 1004-1104 |
| CR69 | DIODE | 214 | 29-30-00 | 1004-1104 |
| CR69 | DIODE | 214 | 32-30-00 | 1004-1104 |
| CR69 | DIODE | 214 | 32-60-00 | 1004-1104 |
| CR690 | DIODE | 111 | 31-14-18 | 1004-1104 |
| CR690 | DIODE | 111 | 31-14-30 | 1004-1104 |
| CR691 | DIODE | 111 | 31-14-18 | 1004-1104 |
| CR691 | DIODE | 111 | 31-14-30 | 1004-1104 |
| CR7 | DIODE | SEE E31 | 24-61-00 | 1004-1104 |

| CODE | NOMENCLATURE | LOCATION | MANUAL REF | EFF. |
|---|---|---|---|---|
| CR7 | DIODE | SEE E31 | 31-12-50 | 1004-1104 |
| CR70 | DIODE | 214 | 29-10-00 | 1004-1104 |
| CR70 | DIODE | 214 | 29-30-00 | 1004-1104 |
| CR70 | DIODE | 214 | 32-30-00 | 1004-1104 |
| CR70 | DIODE | 214 | 32-60-00 | 1004-1104 |
| CR706 | DIODE | 111 | 31-14-18 | 1004-1104 |
| CR706 | DIODE | 111 | 34-59-20 | 1004-1104 |
| CR707 | DIODE | 111 | 31-14-18 | 1004-1104 |
| CR707 | DIODE | 111 | 34-59-20 | 1004-1104 |
| CR71 | DIODE | 214 | 29-10-00 | 1004-1104 |
| CR71 | DIODE | 214 | 29-30-00 | 1004-1104 |
| CR71 | DIODE | 214 | 32-30-00 | 1004-1104 |
| CR71 | DIODE | 214 | 32-60-00 | 1004-1104 |
| CR712 | ZENER DIODE | SEE PC21 | 22-11-00 | 1004-1104 |
| CR712 | ZENER DIODE | SEE PC21 | 31-14-20 | 1004-1104 |
| CR712 | ZENER DIODE | SEE PC21 | 31-14-30 | 1004-1104 |
| CR713 | DIODE | SEE PC21 | 22-11-00 | 1004-1104 |
| CR713 | DIODE | SEE PC21 | 31-14-20 | 1004-1104 |
| CR713 | DIODE | SEE PC21 | 31-14-30 | 1004-1104 |
| CR719 | DIODE | SEE PC20 | 22-11-00 | 1004-1104 |
| CR72 | DIODE | 214 | 29-10-00 | 1004-1104 |
| CR72 | DIODE | 214 | 29-30-00 | 1004-1104 |
| CR72 | DIODE | 214 | 32-30-00 | 1004-1104 |
| CR72 | DIODE | 214 | 32-60-00 | 1004-1104 |
| CR720 | DIODE | SEE PC20 | 22-11-00 | 1004-1104 |
| CR721 | DIODE | SEE PC20 | 22-11-00 | 1004-1104 |
| CR722 | DIODE | SEE PC20 | 22-11-00 | 1004-1104 |
| CR727 | ZENER | SEE PCB31 | 34-43-00 | 1004-1104 |
| CR728 | DIODO | SEE PCB31 | 34-43-00 | 1004-1104 |
| CR729 | DIODO | SEE PCB31 | 34-43-00 | 1004-1104 |
| CR73 | DIODE | 214 | 29-10-00 | 1004-1104 |
| CR73 | DIODE | 214 | 29-30-00 | 1004-1104 |
| CR73 | DIODE | 214 | 32-30-00 | 1004-1104 |
| CR73 | DIODE | 214 | 32-60-00 | 1004-1104 |
| CR730 | DIODO | SEE PCB31 | 34-43-00 | 1004-1104 |
| CR731 | DIODE | TBD | 34-44-00 | 1004-1104 |
| CR74 | DIODE | 214 | 29-10-00 | 1004-1104 |
| CR74 | DIODE | 214 | 29-30-00 | 1004-1104 |
| CR74 | DIODE | 214 | 32-30-00 | 1004-1104 |
| CR74 | DIODE | 214 | 32-60-00 | 1004-1104 |
| CR75 | DIODE | 214 | 29-10-00 | 1004-1104 |

| CODE | NOMENCLATURE | LOCATION | MANUAL REF | EFF. |
|---|---|---|---|---|
| CR75 | DIODE | 214 | 29-30-00 | 1004-1104 |
| CR75 | DIODE | 214 | 32-30-00 | 1004-1104 |
| CR75 | DIODE | 214 | 32-60-00 | 1004-1104 |
| CR76 | DIODE | 214 | 29-10-00 | 1004-1104 |
| CR76 | DIODE | 214 | 29-30-00 | 1004-1104 |
| CR76 | DIODE | 214 | 32-30-00 | 1004-1104 |
| CR76 | DIODE | 214 | 32-60-00 | 1004-1104 |
| CR77 | DIODE | 214 | 27-32-00 | 1004-1104 |
| CR77 | DIODE | 214 | 31-12-11 | 1004-1104 |
| CR78 | DIODE | 214 | 29-10-00 | 1004-1104 |
| CR78 | DIODE | 214 | 29-30-00 | 1004-1104 |
| CR78 | DIODE | 214 | 32-30-00 | 1004-1104 |
| CR78 | DIODE | 214 | 32-60-00 | 1004-1104 |
| CR79 | DIODE | 111 | 21-51-00 | 1004-1104 |
| CR8 | DIODE | 213 | 24-30-00 | 1004-1104 |
| CR8 | DIODE | 213 | 31-13-10 | 1004-1104 |
| CR9 | DIODE | 213 | 24-30-00 | 1004-1104 |
| CR9 | DIODE | 213 | 31-13-10 | 1004-1104 |
| CR90 | DIODE | 214 | 32-51-00 | 1004-1104 |
| CR97 | DIODE | 213 | 27-00-00 | 1004-1104 |
| CR97 | DIODE | 213 | 31-13-21 | 1004-1104 |
| CR98 | DIODE | 214 | 29-10-00 | 1004-1104 |
| CR98 | DIODE | 214 | 29-30-00 | 1004-1104 |
| CR98 | DIODE | 214 | 32-30-00 | 1004-1104 |
| CR98 | DIODE | 214 | 32-60-00 | 1004-1104 |
| DS10 | LIGHT-STROBE | 172 | 33-40-00 | 1004-1104 |
| DS11 | LIGHT-STROBE | 340 | 33-40-00 | 1004-1104 |
| DS12 | EL PANEL | 214 | 33-10-20 | 1004-1104 |
| DS13 | EL PANEL | 213 | 31-13-10 | 1004-1104 |
| DS13 | EL PANEL | 213 | 33-10-20 | 1004-1104 |
| DS1501 | LAMP | 241 | 33-26-00 | 1004-1104 |
| DS1502 | LAMP | 242 REAR | 33-26-00 | 1004-1104 |
| DS1503 | LAMP | 242 VANIT | 33-26-00 | 1004-1104 |
| DS16 | EL PANEL | 211 | 31-12-40 | 1004-1104 |
| DS1607 | LAMP-HOLDER | 231 | 33-13-00 | 1004-1104 |
| DS1608 | LAMP-HOLDER | 222 | 33-13-00 | 1004-1104 |
| DS1609 | LAMP-HOLDER | 221 | 33-13-00 | 1004-1104 |
| DS1621 | FLUORESCENT BULB | 242 | 33-12-00 | 1004-1104 |
| DS1621 | FLUORESCENT BULB | 242 | 33-12-10 | 1004-1104 |
| DS1621 | FLUORESCENT BULB | 242 | 33-12-30 | 1004-1104 |
| DS1621 | FLUORESCENT BULB | 242 | 33-12-40 | 1004-1104 |

| CODE | NOMENCLATURE | LOCATION | MANUAL REF | EFF. |
|---|---|---|---|---|
| DS1622 | FLUORESCENT BULB | 242 | 33-12-00 | 1004-1104 |
| DS1622 | FLUORESCENT BULB | 242 | 33-12-10 | 1004-1104 |
| DS1622 | FLUORESCENT BULB | 242 | 33-12-30 | 1004-1104 |
| DS1622 | FLUORESCENT BULB | 242 | 33-12-40 | 1004-1104 |
| DS1623 | FLUORESCENT BULB | 242 | 33-12-00 | 1004-1104 |
| DS1623 | FLUORESCENT BULB | 242 | 33-12-10 | 1004-1104 |
| DS1623 | FLUORESCENT BULB | 242 | 33-12-30 | 1004-1104 |
| DS1623 | FLUORESCENT BULB | 242 | 33-12-40 | 1004-1104 |
| DS1624 | FLUORESCENT BULB | 242 | 33-12-00 | 1004-1104 |
| DS1624 | FLUORESCENT BULB | 242 | 33-12-10 | 1004-1104 |
| DS1624 | FLUORESCENT BULB | 242 | 33-12-30 | 1004-1104 |
| DS1624 | FLUORESCENT BULB | 242 | 33-12-40 | 1004-1104 |
| DS1625 | FLUORESCENT BULB | 242 | 33-12-00 | 1004-1104 |
| DS1625 | FLUORESCENT BULB | 242 | 33-12-10 | 1004-1104 |
| DS1625 | FLUORESCENT BULB | 242 | 33-12-30 | 1004-1104 |
| DS1625 | FLUORESCENT BULB | 242 | 33-12-40 | 1004-1104 |
| DS1626 | FLUORESCENT BULB | 242 | 33-12-00 | 1004-1104 |
| DS1626 | FLUORESCENT BULB | 242 | 33-12-10 | 1004-1104 |
| DS1626 | FLUORESCENT BULB | 242 | 33-12-30 | 1004-1104 |
| DS1626 | FLUORESCENT BULB | 242 | 33-12-40 | 1004-1104 |
| DS1631 | FLUORESCENT BULB | 241 | 33-12-00 | 1004-1104 |
| DS1631 | FLUORESCENT BULB | 241 | 33-12-10 | 1004-1104 |
| DS1631 | FLUORESCENT BULB | 241 | 33-12-40 | 1004-1104 |
| DS1632 | FLUORESCENT BULB | 241 | 33-12-00 | 1004-1104 |
| DS1632 | FLUORESCENT BULB | 241 | 33-12-10 | 1004-1104 |
| DS1632 | FLUORESCENT BULB | 241 | 33-12-40 | 1004-1104 |
| DS1633 | FLUORESCENT BULB | 241 | 33-12-00 | 1004-1104 |
| DS1633 | FLUORESCENT BULB | 241 | 33-12-10 | 1004-1104 |
| DS1633 | FLUORESCENT BULB | 241 | 33-12-40 | 1004-1104 |
| DS1634 | FLUORESCENT BULB | 241 | 33-12-00 | 1004-1104 |
| DS1634 | FLUORESCENT BULB | 241 | 33-12-10 | 1004-1104 |
| DS1634 | FLUORESCENT BULB | 241 | 33-12-40 | 1004-1104 |
| DS1635 | FLUORESCENT BULB | 241 | 33-12-00 | 1004-1104 |
| DS1635 | FLUORESCENT BULB | 241 | 33-12-10 | 1004-1104 |
| DS1635 | FLUORESCENT BULB | 241 | 33-12-40 | 1004-1104 |
| DS1637 | FLUORESCENT BULB | 242 REAR | 33-25-00 | 1004-1104 |
| DS1638 | FLUORESCENT BULB | 242 REAR | 33-25-00 | 1004-1104 |
| DS1639 | FLUORESCENT BULB | 242 REAR | 33-25-00 | 1004-1104 |
| DS1640 | LAMP-HOLDER | 232 | 33-24-00 | 1004-1104 |
| DS1641 | FLUORESCENT BULB | 232 | 33-24-00 | 1004-1104 |
| DS1642 | FLUORESCENT BULB | 232 | 33-24-00 | 1004-1104 |

| CODE | NOMENCLATURE | LOCATION | MANUAL REF | EFF. |
|---|---|---|---|---|
| DS1643 | FLUORESCENT BULB | 241 | 33-12-00 | 1004-1104 |
| DS1644 | FLUORESCENT BULB | 242 | 33-12-00 | 1004-1104 |
| DS1644 | FLUORESCENT BULB | 242 | 33-12-30 | 1004-1104 |
| DS1645 | FLUORESCENT TUBE | 241 / 242 | 33-25-00 | 1004-1104 |
| DS1646 | FLUORESCENT TUBE | 241 / 242 | 33-25-00 | 1004-1104 |
| DS1647 | FLUORESCENT TUBE | 241 / 242 | 33-25-00 | 1004-1104 |
| DS1648 | FLUORESCENT TUBE | 241 / 242 | 33-25-00 | 1004-1104 |
| DS1649 | FLUORESCENT TUBE | 241 / 242 | 33-12-00 | 1004-1104 |
| DS1649 | FLUORESCENT TUBE | 241 / 242 | 33-12-10 | 1004-1104 |
| DS1649 | FLUORESCENT TUBE | 241 / 242 | 33-12-40 | 1004-1104 |
| DS1649 | FLUORESCENT TUBE | 241 / 242 | 33-12-50 | 1004-1104 |
| DS1649 | FLUORESCENT TUBE | 241 / 242 | 33-12-60 | 1004-1104 |
| DS1650 | FLUORESCENT TUBE | 241 / 242 | 33-12-00 | 1004-1104 |
| DS1650 | FLUORESCENT TUBE | 241 / 242 | 33-12-10 | 1004-1104 |
| DS1650 | FLUORESCENT TUBE | 241 / 242 | 33-12-40 | 1004-1104 |
| DS1650 | FLUORESCENT TUBE | 241 / 242 | 33-12-50 | 1004-1104 |
| DS1650 | FLUORESCENT TUBE | 241 / 242 | 33-12-60 | 1004-1104 |
| DS1651 | FLUORESCENT TUBE | 241 / 242 | 33-12-00 | 1004-1104 |
| DS1651 | FLUORESCENT TUBE | 241 / 242 | 33-12-10 | 1004-1104 |
| DS1651 | FLUORESCENT TUBE | 241 / 242 | 33-12-40 | 1004-1104 |
| DS1651 | FLUORESCENT TUBE | 241 / 242 | 33-12-50 | 1004-1104 |
| DS1651 | FLUORESCENT TUBE | 241 / 242 | 33-12-60 | 1004-1104 |
| DS1652 | FLUORESCENT TUBE | 241 / 242 | 33-12-00 | 1004-1104 |
| DS1652 | FLUORESCENT TUBE | 241 / 242 | 33-12-10 | 1004-1104 |
| DS1652 | FLUORESCENT TUBE | 241 / 242 | 33-12-40 | 1004-1104 |
| DS1652 | FLUORESCENT TUBE | 241 / 242 | 33-12-50 | 1004-1104 |
| DS1652 | FLUORESCENT TUBE | 241 / 242 | 33-12-60 | 1004-1104 |
| DS1653 | FLUORESCENT TUBE | 241 / 242 | 33-12-00 | 1004-1104 |
| DS1653 | FLUORESCENT TUBE | 241 / 242 | 33-12-10 | 1004-1104 |
| DS1653 | FLUORESCENT TUBE | 241 / 242 | 33-12-40 | 1004-1104 |
| DS1653 | FLUORESCENT TUBE | 241 / 242 | 33-12-50 | 1004-1104 |
| DS1653 | FLUORESCENT TUBE | 241 / 242 | 33-12-60 | 1004-1104 |
| DS1654 | FLUORESCENT TUBE | 241 / 242 | 33-12-00 | 1004-1104 |
| DS1654 | FLUORESCENT TUBE | 241 / 242 | 33-12-10 | 1004-1104 |
| DS1654 | FLUORESCENT TUBE | 241 / 242 | 33-12-40 | 1004-1104 |
| DS1654 | FLUORESCENT TUBE | 241 / 242 | 33-12-50 | 1004-1104 |
| DS1654 | FLUORESCENT TUBE | 241 / 242 | 33-12-60 | 1004-1104 |
| DS1655 | FLUORESCENT TUBE | 241 / 242 | 33-12-00 | 1004-1104 |
| DS1655 | FLUORESCENT TUBE | 241 / 242 | 33-12-10 | 1004-1104 |
| DS1655 | FLUORESCENT TUBE | 241 / 242 | 33-12-40 | 1004-1104 |
| DS1655 | FLUORESCENT TUBE | 241 / 242 | 33-12-50 | 1004-1104 |

| CODE | NOMENCLATURE | LOCATION | MANUAL REF | EFF. |
|---|---|---|---|---|
| DS1655 | FLUORESCENT TUBE | 241 / 242 | 33-12-60 | 1004-1104 |
| DS1656 | FLUORESCENT TUBE | 241 / 242 | 33-12-00 | 1004-1104 |
| DS1656 | FLUORESCENT TUBE | 241 / 242 | 33-12-10 | 1004-1104 |
| DS1656 | FLUORESCENT TUBE | 241 / 242 | 33-12-40 | 1004-1104 |
| DS1656 | FLUORESCENT TUBE | 241 / 242 | 33-12-50 | 1004-1104 |
| DS1656 | FLUORESCENT TUBE | 241 / 242 | 33-12-60 | 1004-1104 |
| DS1657 | FLUORESCENT TUBE | 241 / 242 | 33-12-00 | 1004-1104 |
| DS1657 | FLUORESCENT TUBE | 241 / 242 | 33-12-10 | 1004-1104 |
| DS1657 | FLUORESCENT TUBE | 241 / 242 | 33-12-40 | 1004-1104 |
| DS1657 | FLUORESCENT TUBE | 241 / 242 | 33-12-50 | 1004-1104 |
| DS1657 | FLUORESCENT TUBE | 241 / 242 | 33-12-60 | 1004-1104 |
| DS1658 | FLUORESCENT TUBE | 241 / 242 | 33-12-00 | 1004-1104 |
| DS1658 | FLUORESCENT TUBE | 241 / 242 | 33-12-10 | 1004-1104 |
| DS1658 | FLUORESCENT TUBE | 241 / 242 | 33-12-40 | 1004-1104 |
| DS1658 | FLUORESCENT TUBE | 241 / 242 | 33-12-50 | 1004-1104 |
| DS1658 | FLUORESCENT TUBE | 241 / 242 | 33-12-60 | 1004-1104 |
| DS1659 | FLUORESCENT TUBE | 241 / 242 | 33-12-00 | 1004-1104 |
| DS1659 | FLUORESCENT TUBE | 241 / 242 | 33-12-10 | 1004-1104 |
| DS1659 | FLUORESCENT TUBE | 241 / 242 | 33-12-40 | 1004-1104 |
| DS1659 | FLUORESCENT TUBE | 241 / 242 | 33-12-50 | 1004-1104 |
| DS1659 | FLUORESCENT TUBE | 241 / 242 | 33-12-60 | 1004-1104 |
| DS1660 | FLUORESCENT TUBE | 241 / 242 | 33-12-00 | 1004-1104 |
| DS1660 | FLUORESCENT TUBE | 241 / 242 | 33-12-10 | 1004-1104 |
| DS1660 | FLUORESCENT TUBE | 241 / 242 | 33-12-40 | 1004-1104 |
| DS1660 | FLUORESCENT TUBE | 241 / 242 | 33-12-50 | 1004-1104 |
| DS1660 | FLUORESCENT TUBE | 241 / 242 | 33-12-60 | 1004-1104 |
| DS1663 | FLUORESCENT TUBE | 241 / 242 | 33-25-00 | 1004-1104 |
| DS1664 | FLUORESCENT TUBE | 241 / 242 | 33-25-00 | 1004-1104 |
| DS1800 | LAMP | 242 PSU | 33-22-40 | 1004-1104 |
| DS1801 | LAMP | 241 PSU | 33-22-40 | 1004-1104 |
| DS1802 | LAMP | 242 PSU | 33-22-10 | 1004-1104 |
| DS1802 | LAMP | 242 PSU | 33-22-20 | 1004-1104 |
| DS1802 | LAMP | 242 PSU | 33-22-40 | 1004-1104 |
| DS1802 | LAMP | 242 PSU | 33-22-50 | 1004-1104 |
| DS1802 | LAMP | 242 PSU | 33-23-00 | 1004-1104 |
| DS1803 | LAMP | 241 PSU | 33-22-10 | 1004-1104 |
| DS1803 | LAMP | 241 PSU | 33-22-20 | 1004-1104 |
| DS1803 | LAMP | 241 PSU | 33-22-40 | 1004-1104 |
| DS1803 | LAMP | 241 PSU | 33-22-50 | 1004-1104 |
| DS1803 | LAMP | 241 PSU | 33-23-00 | 1004-1104 |
| DS1804 | LAMP | 242 PSU | 33-22-10 | 1004-1104 |

| CODE | NOMENCLATURE | LOCATION | MANUAL REF | EFF. |
|---|---|---|---|---|
| DS1804 | LAMP | 242 PSU | 33-22-20 | 1004-1104 |
| DS1804 | LAMP | 242 PSU | 33-22-40 | 1004-1104 |
| DS1804 | LAMP | 242 PSU | 33-22-50 | 1004-1104 |
| DS1804 | LAMP | 242 PSU | 33-22-60 | 1004-1104 |
| DS1804 | LAMP | 242 PSU | 33-22-70 | 1004-1104 |
| DS1805 | LAMP | 241 PSU | 33-22-10 | 1004-1104 |
| DS1805 | LAMP | 241 PSU | 33-22-20 | 1004-1104 |
| DS1805 | LAMP | 241 PSU | 33-22-40 | 1004-1104 |
| DS1805 | LAMP | 241 PSU | 33-22-50 | 1004-1104 |
| DS1805 | LAMP | 241 PSU | 33-22-60 | 1004-1104 |
| DS1806 | LAMP | 242 PSU | 33-22-10 | 1004-1104 |
| DS1806 | LAMP | 242 PSU | 33-22-20 | 1004-1104 |
| DS1806 | LAMP | 242 PSU | 33-22-40 | 1004-1104 |
| DS1806 | LAMP | 242 PSU | 33-22-50 | 1004-1104 |
| DS1806 | LAMP | 242 PSU | 33-22-60 | 1004-1104 |
| DS1806 | LAMP | 242 PSU | 33-22-70 | 1004-1104 |
| DS1806 | LAMP | 242 PSU | 33-27-00 | 1004-1104 |
| DS1807 | LAMP | 241 PSU | 33-22-10 | 1004-1104 |
| DS1807 | LAMP | 241 PSU | 33-22-20 | 1004-1104 |
| DS1807 | LAMP | 241 PSU | 33-22-40 | 1004-1104 |
| DS1807 | LAMP | 241 PSU | 33-22-50 | 1004-1104 |
| DS1807 | LAMP | 241 PSU | 33-22-60 | 1004-1104 |
| DS1807 | LAMP | 241 PSU | 33-22-70 | 1004-1104 |
| DS1807 | LAMP | 241 PSU | 33-27-00 | 1004-1104 |
| DS1808 | LAMP | 242 PSU | 33-22-10 | 1004-1104 |
| DS1808 | LAMP | 242 PSU | 33-22-50 | 1004-1104 |
| DS1808 | LAMP | 242 PSU | 33-22-60 | 1004-1104 |
| DS1809 | LAMP | 241 PSU | 33-22-10 | 1004-1104 |
| DS1809 | LAMP | 241 PSU | 33-22-20 | 1004-1104 |
| DS1809 | LAMP | 241 PSU | 33-22-40 | 1004-1104 |
| DS1809 | LAMP | 241 PSU | 33-22-50 | 1004-1104 |
| DS1809 | LAMP | 241 PSU | 33-22-70 | 1004-1104 |
| DS1809 | LAMP | 241 PSU | 33-27-00 | 1004-1104 |
| DS1810 | LAMP | 242 PSU | 33-22-10 | 1004-1104 |
| DS1810 | LAMP | 242 PSU | 33-22-20 | 1004-1104 |
| DS1810 | LAMP | 242 PSU | 33-22-40 | 1004-1104 |
| DS1810 | LAMP | 242 PSU | 33-22-50 | 1004-1104 |
| DS1810 | LAMP | 242 PSU | 33-22-60 | 1004-1104 |
| DS1810 | LAMP | 242 PSU | 33-27-00 | 1004-1104 |
| DS1811 | LAMP | 241 PSU | 33-22-10 | 1004-1104 |
| DS1811 | LAMP | 241 PSU | 33-22-50 | 1004-1104 |

| CODE | NOMENCLATURE | LOCATION | MANUAL REF | EFF. |
|---|---|---|---|---|
| DS1811 | LAMP | 241 PSU | 33-22-60 | 1004-1104 |
| DS1811 | LAMP | 241 PSU | 33-22-70 | 1004-1104 |
| DS22 | EL PANEL | 216 | 31-12-60 | 1004-1104 |
| DS22 | EL PANEL | 216 | 33-10-20 | 1004-1104 |
| DS23 | EL PANEL | 215 | 31-12-50 | 1004-1104 |
| DS23 | EL PANEL | 215 | 33-10-20 | 1004-1104 |
| DS25 | EL PANEL | 214 | 31-12-20 | 1004-1104 |
| DS25 | EL PANEL | 214 | 33-10-20 | 1004-1104 |
| DS27 | LAMP HOLDER | 226 | 33-10-20 | 1004-1104 |
| DS28 | LAMP HOLDER | 226 | 33-10-20 | 1004-1104 |
| DS29 | LAMP HOLDER | 226 | 33-10-20 | 1004-1104 |
| DS3 | LIGHT-RECOGNITION | 320 | 33-40-00 | 1004-1104 |
| DS30 | LAMP HOLDER | 226 | 33-10-20 | 1004-1104 |
| DS31 | LAMP HOLDER | 226 | 33-10-20 | 1004-1104 |
| DS32 | LAMP HOLDER | 226 | 33-10-20 | 1004-1104 |
| DS33 | LAMP HOLDER | 226 | 33-10-20 | 1004-1104 |
| DS34 | LAMP HOLDER | 226 | 33-10-20 | 1004-1104 |
| DS35 | EL PANEL | 216 | 31-12-60 | 1004-1104 |
| DS35 | EL PANEL | 216 | 33-10-20 | 1004-1104 |
| DS36 | EL PANEL | 216 | 31-12-60 | 1004-1104 |
| DS36 | EL PANEL | 216 | 33-10-20 | 1004-1104 |
| DS37 | EL PANEL | 216 | 31-12-60 | 1004-1104 |
| DS37 | EL PANEL | 216 | 33-10-20 | 1004-1104 |
| DS38 | EL PANEL | 215 | 31-12-50 | 1004-1104 |
| DS38 | EL PANEL | 215 | 33-10-20 | 1004-1104 |
| DS39 | EL PANEL | 215 | 31-12-50 | 1004-1104 |
| DS39 | EL PANEL | 215 | 33-10-20 | 1004-1104 |
| DS4 | LIGHT-POSITION | 650 | 33-40-00 | 1004-1104 |
| DS40 | EL PANEL | 215 | 31-12-50 | 1004-1104 |
| DS40 | EL PANEL | 215 | 33-10-20 | 1004-1104 |
| DS41 | LAMP HOLDER | 214 | 29-10-00 | 1004-1104 |
| DS41 | LAMP HOLDER | 214 | 29-30-00 | 1004-1104 |
| DS41 | LAMP HOLDER | 214 | 31-12-20 | 1004-1104 |
| DS41 | LAMP HOLDER | 214 | 32-30-00 | 1004-1104 |
| DS41 | LAMP HOLDER | 214 | 32-60-00 | 1004-1104 |
| DS42 | LAMP HOLDER | 214 | 29-10-00 | 1004-1104 |
| DS42 | LAMP HOLDER | 214 | 29-30-00 | 1004-1104 |
| DS42 | LAMP HOLDER | 214 | 31-12-20 | 1004-1104 |
| DS42 | LAMP HOLDER | 214 | 32-30-00 | 1004-1104 |
| DS42 | LAMP HOLDER | 214 | 32-60-00 | 1004-1104 |
| DS43 | EL PANEL | 213 | 31-13-20 | 1004-1104 |

| CODE | NOMENCLATURE | LOCATION | MANUAL REF | EFF. |
|---|---|---|---|---|
| DS43 | EL PANEL | 213 | 33-10-20 | 1004-1104 |
| DS5 | LIGHT-POSITION | 550 | 33-40-00 | 1004-1104 |
| DS6 | LIGHT-BEACON | 241 | 33-40-00 | 1004-1104 |
| DS600 | LAMP HOLDER | 223 | 34-56-00 | 1004-1104 |
| DS602 | LAMP HOLDER | 224 | 33-10-20 | 1004-1104 |
| DS602 | LAMP HOLDER | 224 | 34-51-00 | 1004-1104 |
| DS602 | LAMP HOLDER | 224 | 34-58-10 | 1004-1104 |
| DS603 | LAMP | 223 | 31-17-10 | 1004-1104 |
| DS603 | LAMP | 223 | 31-17-20 | 1004-1104 |
| DS603 | LAMP | 223 | 34-23-00 | 1004-1104 |
| DS604 | LAMP | SEE EFIS P | 21-22-00 | 1004-1104 |
| DS604 | LAMP | SEE EFIS P | 21-51-00 | 1004-1104 |
| DS604 | LAMP | SEE EFIS P | 22-11-00 | 1004-1104 |
| DS604 | LAMP | SEE EFIS P | 31-17-10 | 1004-1104 |
| DS604 | LAMP | SEE EFIS P | 31-17-20 | 1004-1104 |
| DS605 | EL PANEL | 223 | 31-17-10 | 1004-1104 |
| DS605 | EL PANEL | 223 | 31-17-20 | 1004-1104 |
| DS605 | EL PANEL | 223 | 33-10-20 | 1004-1104 |
| DS607 | LAMP | 223 | 34-59-10 | 1004-1104 |
| DS607 | LAMP | 223 | 34-59-20 | 1004-1104 |
| DS607 | LAMP | 223 | 34-59-30 | 1004-1104 |
| DS607 | LAMP | 223 | 34-59-40 | 1004-1104 |
| DS607 | LAMP | 223 | 34-59-60 | 1004-1104 |
| DS607 | LAMP | 223 | 34-59-70 | 1004-1104 |
| DS607 | LAMP | 223 | 34-59-80 | 1004-1104 |
| DS607 | LAMP | 223 | 34-59-90 | 1004-1104 |
| DS609 | EL PANEL | 213 | 31-14-50 | 1104-1104 |
| DS610 | EL PANEL | 213 | 31-14-50 | 1104-1104 |
| DS611 | LAMP | 223 | 34-59-10 | 1004-1104 |
| DS611 | LAMP | 223 | 34-59-20 | 1004-1104 |
| DS611 | LAMP | 223 | 34-59-30 | 1004-1104 |
| DS613 | LAMP-MSG/WPT/GPS | 223 | 34-59-40 | 1004-1104 |
| DS613 | LAMP-MSG/WPT/GPS | 223 | 34-59-60 | 1004-1104 |
| DS613 | LAMP-MSG/WPT/GPS | 223 | 34-59-70 | 1004-1104 |
| DS613 | LAMP-MSG/WPT/GPS | 223 | 34-59-80 | 1004-1104 |
| DS613 | LAMP-MSG/WPT/GPS | 223 | 34-59-90 | 1004-1104 |
| DS614 | LAMP | 213 | 31-14-50 | 1104-1104 |
| DS64 | EL PANEL | 213 | 31-12-10 | 1004-1104 |
| DS64 | EL PANEL | 213 | 31-13-30 | 1004-1104 |
| DS64 | EL PANEL | 213 | 33-10-20 | 1004-1104 |
| DS65 | INDICATOR- INLET/STAB DEICE | SEE E25 | 30-22-00 | 1004-1104 |

| CODE | NOMENCLATURE | LOCATION | MANUAL REF | EFF. |
|---|---|---|---|---|
| DS65 | INDICATOR- INLET/STAB DEICE | SEE E25 | 31-12-10 | 1004-1104 |
| DS67 | LIGHT-POSITION | 543 | 33-40-00 | 1004-1104 |
| DS69 | LAMP HOLDER | 223 | 27-32-00 | 1004-1104 |
| DS7 | LIGHT-INSPECTION | 410 | 33-40-00 | 1004-1104 |
| DS70 | EL PANEL | 213 | 31-18-00 | 1004-1104 |
| DS70 | EL PANEL | 213 | 33-10-20 | 1004-1104 |
| DS71 | INDICATOR-STR/TAXI | 214 | 31-12-20 | 1004-1104 |
| DS71 | INDICATOR-STR/TAXI | 214 | 32-51-00 | 1004-1104 |
| DS72 | LIGHT | 212 | 33-10-20 | 1004-1104 |
| DS73 | LIGHT | 211 | 33-10-20 | 1004-1104 |
| DS74 | LAMP HOLDER | 214 | 32-43-00 | 1004-1104 |
| DS75 | LAMP HOLDER | 281 | 33-31-00 | 1004-1104 |
| DS76 | EL PANEL | 214 | 31-12-30 | 1004-1104 |
| DS77 | LAMP HOLDER | 223 | 30-32-00 | 1004-1104 |
| DS78 | EL PANEL | 213 | 34-43-00 | 1004-1104 |
| DS79 | ELETTROLUMINESCENT PNL | TBD | 34-43-00 | 1004-1104 |
| DS8 | LIGHT-POSITION | 643 | 33-40-00 | 1004-1104 |
| E1 | CONTROL UNIT-GENERATOR L | 281 | 24-30-00 | 1004-1104 |
| E1 | CONTROL UNIT-GENERATOR L | 281 | 24-61-00 | 1004-1104 |
| E1 | CONTROL UNIT-GENERATOR L | 281 | 26-20-00 | 1004-1104 |
| E100 | PWR SUPPLY-DIMMER | 232 | 33-10-10 | 1004-1104 |
| E101 | DUAL MASTER COUPLER | 111 | 31-52-00 | 1004-1104 |
| E102 | MASTER WRN/CAUTION | 224 | 31-52-00 | 1004-1104 |
| E105 | CONTROL UNIT-FREON | 281 | 21-52-00 | 1004-1104 |
| E109 | TEMP CTRL COMP CKPT | 212 | 21-41-00 | 1004-1104 |
| E110 | TEMP CTRL COMP CABIN | 232 | 21-41-00 | 1004-1104 |
| E111 | SWITCH DEVICE UNIT | 225 | 34-10-00 | 1004-1104 |
| E111 | SWITCH DEVICE UNIT | 225 | 34-54-21 | 1004-1104 |
| E112 | DC TO DC CONVERTER | TBD | 24-63-00 | 1004-1104 |
| E12 | CONTROLLER-AIR CONDITIONING | 231-CKPT | 21-60-00 | 1004-1104 |
| E13 | DETECTOR-FIRE L | 430 | 26-10-00 | 1004-1104 |
| E14 | DETECTOR-FIRE R | 440 | 26-10-00 | 1004-1104 |
| E15 | IGNITION UNIT | 410 | 24-30-00 | 1004-1104 |
| E16 | IGNITION UNIT | 420 | 24-30-00 | 1004-1104 |
| E1600 | AC/DC CIRCUIT SPC | 232 | 33-12-00 | 1004-1104 |
| E1600 | AC/DC CIRCUIT SPC | 232 | 33-12-10 | 1004-1104 |
| E1600 | AC/DC CIRCUIT SPC | 232 | 33-12-60 | 1004-1104 |
| E1600 | AC/DC CIRCUIT SPC | 232 | 33-13-00 | 1004-1104 |
| E1600 | AC/DC CIRCUIT SPC | 232 | 33-23-00 | 1004-1104 |
| E1610 | SWITCH PAD | 231 | 33-12-00 | 1004-1104 |
| E1610 | SWITCH PAD | 231 | 33-12-10 | 1004-1104 |

| CODE | NOMENCLATURE | LOCATION | MANUAL REF | EFF. |
|---|---|---|---|---|
| E1610 | SWITCH PAD | 231 | 33-12-40 | 1004-1104 |
| E1610 | SWITCH PAD | 231 | 33-12-60 | 1004-1104 |
| E1610 | SWITCH PAD | 231 | 33-13-00 | 1004-1104 |
| E1610 | SWITCH PAD | 231 | 33-21-10 | 1004-1104 |
| E1610 | SWITCH PAD | 231 | 33-21-20 | 1004-1104 |
| E1610 | SWITCH PAD | 231 | 33-21-40 | 1004-1104 |
| E1610 | SWITCH PAD | 231 | 33-21-50 | 1004-1104 |
| E1610 | SWITCH PAD | 231 | 33-21-70 | 1004-1104 |
| E1610 | SWITCH PAD | 231 | 33-21-80 | 1004-1104 |
| E1626A | SWITCH PAD | 232 | 33-21-50 | 1004-1104 |
| E1626A | SWITCH PAD | 232 | 33-21-80 | 1004-1104 |
| E1626A | SWITCH PAD | 232 | 33-22-10 | 1004-1104 |
| E1626A | SWITCH PAD | 232 | 33-22-50 | 1004-1104 |
| E1627 | SWITCH PAD | 231 | 21-23-00 | 1004-1104 |
| E1627 | SWITCH PAD | 231 | 33-21-10 | 1004-1104 |
| E1627 | SWITCH PAD | 231 | 33-21-20 | 1004-1104 |
| E1627 | SWITCH PAD | 231 | 33-21-50 | 1004-1104 |
| E1627 | SWITCH PAD | 231 | 33-22-20 | 1004-1104 |
| E1627 | SWITCH PAD | 231 | 33-22-50 | 1004-1104 |
| E1628 | SWITCH PAD | 232 | 33-21-10 | 1004-1104 |
| E1628 | SWITCH PAD | 232 | 33-21-20 | 1004-1104 |
| E1628 | SWITCH PAD | 232 | 33-21-50 | 1004-1104 |
| E1628 | SWITCH PAD | 232 | 33-22-10 | 1004-1104 |
| E1628 | SWITCH PAD | 232 | 33-22-20 | 1004-1104 |
| E1628 | SWITCH PAD | 232 | 33-22-50 | 1004-1104 |
| E1629 | SWITCH PAD | 231 | 21-23-00 | 1004-1104 |
| E1630 | SWITCH PAD | 232 | 21-23-00 | 1004-1104 |
| E1630 | SWITCH PAD | 232 | 33-12-00 | 1004-1104 |
| E1630 | SWITCH PAD | 232 | 33-12-10 | 1004-1104 |
| E1630 | SWITCH PAD | 232 | 33-12-30 | 1004-1104 |
| E1630 | SWITCH PAD | 232 | 33-12-40 | 1004-1104 |
| E1630 | SWITCH PAD | 232 | 33-12-60 | 1004-1104 |
| E1630 | SWITCH PAD | 232 | 33-21-10 | 1004-1104 |
| E1630 | SWITCH PAD | 232 | 33-21-20 | 1004-1104 |
| E1630 | SWITCH PAD | 232 | 33-21-40 | 1004-1104 |
| E1630 | SWITCH PAD | 232 | 33-21-50 | 1004-1104 |
| E1630 | SWITCH PAD | 232 | 33-21-70 | 1004-1104 |
| E1630 | SWITCH PAD | 232 | 33-21-80 | 1004-1104 |
| E1630 | SWITCH PAD | 232 | 33-22-10 | 1004-1104 |
| E1630 | SWITCH PAD | 232 | 33-22-20 | 1004-1104 |
| E1630 | SWITCH PAD | 232 | 33-22-40 | 1004-1104 |

| CODE | NOMENCLATURE | LOCATION | MANUAL REF | EFF. |
|---|---|---|---|---|
| E1630 | SWITCH PAD | 232 | 33-22-50 | 1004-1104 |
| E1630 | SWITCH PAD | 232 | 33-22-70 | 1004-1104 |
| E1630 | SWITCH PAD | 232 | 33-23-00 | 1004-1104 |
| E1630 | SWITCH PAD | 232 | 33-27-00 | 1004-1104 |
| E1631 | SWITCH PAD | 231 | 33-21-20 | 1004-1104 |
| E1631 | SWITCH PAD | 231 | 33-21-50 | 1004-1104 |
| E1631 | SWITCH PAD | 231 | 33-22-20 | 1004-1104 |
| E1631 | SWITCH PAD | 231 | 33-22-50 | 1004-1104 |
| E1632 | SWITCH PAD | 232 | 21-23-00 | 1004-1104 |
| E1633 | SWITCH PAD | 231 | 21-23-00 | 1004-1104 |
| E1633 | SWITCH PAD | 231 | 33-12-00 | 1004-1104 |
| E1633 | SWITCH PAD | 231 | 33-12-10 | 1004-1104 |
| E1633 | SWITCH PAD | 231 | 33-12-40 | 1004-1104 |
| E1633 | SWITCH PAD | 231 | 33-21-10 | 1004-1104 |
| E1633 | SWITCH PAD | 231 | 33-21-20 | 1004-1104 |
| E1633 | SWITCH PAD | 231 | 33-21-40 | 1004-1104 |
| E1633 | SWITCH PAD | 231 | 33-21-50 | 1004-1104 |
| E1633 | SWITCH PAD | 231 | 33-21-80 | 1004-1104 |
| E1633 | SWITCH PAD | 231 | 33-22-10 | 1004-1104 |
| E1633 | SWITCH PAD | 231 | 33-22-20 | 1004-1104 |
| E1633 | SWITCH PAD | 231 | 33-22-40 | 1004-1104 |
| E1633 | SWITCH PAD | 231 | 33-22-50 | 1004-1104 |
| E1633 | SWITCH PAD | 231 | 33-23-00 | 1004-1104 |
| E1634 | SWITCH PAD | 232 | 33-21-10 | 1004-1104 |
| E1634 | SWITCH PAD | 232 | 33-21-20 | 1004-1104 |
| E1634 | SWITCH PAD | 232 | 33-21-50 | 1004-1104 |
| E1634 | SWITCH PAD | 232 | 33-21-70 | 1004-1104 |
| E1634 | SWITCH PAD | 232 | 33-21-80 | 1004-1104 |
| E1634 | SWITCH PAD | 232 | 33-24-00 | 1004-1104 |
| E1634 | SWITCH PAD | 232 | 33-25-00 | 1004-1104 |
| E1636 | SWITCH PAD | 232 | 21-23-00 | 1004-1104 |
| E1636 | SWITCH PAD | 232 | 33-21-10 | 1004-1104 |
| E1636 | SWITCH PAD | 232 | 33-21-50 | 1004-1104 |
| E1636 | SWITCH PAD | 232 | 33-22-10 | 1004-1104 |
| E1636 | SWITCH PAD | 232 | 33-22-20 | 1004-1104 |
| E1636 | SWITCH PAD | 232 | 33-22-50 | 1004-1104 |
| E1639 | SWITCH PAD | 231 | 33-21-50 | 1004-1104 |
| E1639 | SWITCH PAD | 231 | 33-22-50 | 1004-1104 |
| E1651 | SWITCH PAD | 231 | 21-23-00 | 1004-1104 |
| E1651 | SWITCH PAD | 231 | 33-12-00 | 1004-1104 |
| E1651 | SWITCH PAD | 231 | 33-21-10 | 1004-1104 |

| CODE | NOMENCLATURE | LOCATION | MANUAL REF | EFF. |
|---|---|---|---|---|
| E1651 | SWITCH PAD | 231 | 33-21-40 | 1004-1104 |
| E1651 | SWITCH PAD | 231 | 33-22-40 | 1004-1104 |
| E1651 | SWITCH PAD | 231 | 33-23-00 | 1004-1104 |
| E1652 | SWITCH PAD | 232 | 21-23-00 | 1004-1104 |
| E1652 | SWITCH PAD | 232 | 33-12-00 | 1004-1104 |
| E1652 | SWITCH PAD | 232 | 33-12-30 | 1004-1104 |
| E1652 | SWITCH PAD | 232 | 33-21-40 | 1004-1104 |
| E1652 | SWITCH PAD | 232 | 33-22-40 | 1004-1104 |
| E1652 | SWITCH PAD | 232 | 33-23-00 | 1004-1104 |
| E1664 | SWITCH PAD | 232 | 33-21-50 | 1004-1104 |
| E1664 | SWITCH PAD | 232 | 33-22-50 | 1004-1104 |
| E1665A | SWITCH PAD | 231 | 33-21-50 | 1004-1104 |
| E1665A | SWITCH PAD | 231 | 33-21-80 | 1004-1104 |
| E1665A | SWITCH PAD | 231 | 33-22-10 | 1004-1104 |
| E1665A | SWITCH PAD | 231 | 33-22-50 | 1004-1104 |
| E1666 | SWITCH PAD | 232 | 33-21-50 | 1004-1104 |
| E1666 | SWITCH PAD | 232 | 33-21-80 | 1004-1104 |
| E1666 | SWITCH PAD | 232 | 33-22-10 | 1004-1104 |
| E1666 | SWITCH PAD | 232 | 33-22-50 | 1004-1104 |
| E1666A | SWITCH PAD | 232 | 33-21-50 | 1004-1104 |
| E1666A | SWITCH PAD | 232 | 33-22-50 | 1004-1104 |
| E1667 | SWITCH PAD | 231 | 33-21-50 | 1004-1104 |
| E1667 | SWITCH PAD | 231 | 33-21-80 | 1004-1104 |
| E1667 | SWITCH PAD | 231 | 33-22-10 | 1004-1104 |
| E1667 | SWITCH PAD | 231 | 33-22-50 | 1004-1104 |
| E1667A | SWITCH PAD | 231 | 33-21-50 | 1004-1104 |
| E1667A | SWITCH PAD | 231 | 33-22-50 | 1004-1104 |
| E1668A | SWITCH PAD | 232 | 33-21-50 | 1004-1104 |
| E1668A | SWITCH PAD | 232 | 33-22-50 | 1004-1104 |
| E1669A | SWITCH PAD | 231 | 33-21-50 | 1004-1104 |
| E1669A | SWITCH PAD | 231 | 33-22-50 | 1004-1104 |
| E1671A | SWITCH PAD | 231 | 33-12-00 | 1004-1104 |
| E1671A | SWITCH PAD | 231 | 33-12-40 | 1004-1104 |
| E1671A | SWITCH PAD | 231 | 33-21-50 | 1004-1104 |
| E1671A | SWITCH PAD | 231 | 33-22-50 | 1004-1104 |
| E1672A | SWITCH PAD | 232 | 33-12-00 | 1004-1104 |
| E1672A | SWITCH PAD | 232 | 33-12-40 | 1004-1104 |
| E1672A | SWITCH PAD | 232 | 33-21-50 | 1004-1104 |
| E1672A | SWITCH PAD | 232 | 33-22-50 | 1004-1104 |
| E1675 | TOILET | 231 | 25-41-00 | 1004-1104 |
| E1690 | POWER SUPPLY-PNL LTS SWITCH | 232 | 33-21-10 | 1004-1104 |

| CODE | NOMENCLATURE | LOCATION | MANUAL REF | EFF. |
|---|---|---|---|---|
| E1690 | POWER SUPPLY-PNL LTS SWITCH | 232 | 33-21-20 | 1004-1104 |
| E1690 | POWER SUPPLY-PNL LTS SWITCH | 232 | 33-21-40 | 1004-1104 |
| E1690 | POWER SUPPLY-PNL LTS SWITCH | 232 | 33-21-50 | 1004-1104 |
| E1690 | POWER SUPPLY-PNL LTS SWITCH | 232 | 33-21-70 | 1004-1104 |
| E1690 | POWER SUPPLY-PNL LTS SWITCH | 232 | 33-21-80 | 1004-1104 |
| E1691 | POWER SUPPLY-CABIN LTS | 231 | 33-12-00 | 1004-1104 |
| E1691 | POWER SUPPLY-CABIN LTS | 231 | 33-12-10 | 1004-1104 |
| E1691 | POWER SUPPLY-CABIN LTS | 231 | 33-12-40 | 1004-1104 |
| E1692 | POWER SUPPLY-CABIN LTS | 232 | 33-12-00 | 1004-1104 |
| E1692 | POWER SUPPLY-CABIN LTS | 232 | 33-12-10 | 1004-1104 |
| E1692 | POWER SUPPLY-CABIN LTS | 232 | 33-12-30 | 1004-1104 |
| E1692 | POWER SUPPLY-CABIN LTS | 232 | 33-12-40 | 1004-1104 |
| E1693 | POWER SUPPLY-CABIN LTS | 231 | 33-12-00 | 1004-1104 |
| E1693 | POWER SUPPLY-CABIN LTS | 231 | 33-12-10 | 1004-1104 |
| E1693 | POWER SUPPLY-CABIN LTS | 231 | 33-12-40 | 1004-1104 |
| E1697 | POWER SUPPLY | 231 REAR | 33-25-00 | 1004-1104 |
| E1698 | POWER SUPPLY-VANITY LTS | 232 | 33-24-00 | 1004-1104 |
| E1700 | C/B PANEL-UTILITY | 242 REAR | 21-23-00 | 1004-1104 |
| E1700 | C/B PANEL-UTILITY | 242 REAR | 23-30-00 | 1004-1104 |
| E1700 | C/B PANEL-UTILITY | 242 REAR | 24-63-00 | 1004-1104 |
| E1700 | C/B PANEL-UTILITY | 242 REAR | 25-31-00 | 1004-1104 |
| E1700 | C/B PANEL-UTILITY | 242 REAR | 25-31-10 | 1004-1104 |
| E1700 | C/B PANEL-UTILITY | 242 REAR | 25-41-00 | 1004-1104 |
| E1700 | C/B PANEL-UTILITY | 242 REAR | 25-42-00 | 1004-1104 |
| E1700 | C/B PANEL-UTILITY | 242 REAR | 31-30-00 | 1004-1104 |
| E1700 | C/B PANEL-UTILITY | 242 REAR | 33-12-00 | 1004-1104 |
| E1700 | C/B PANEL-UTILITY | 242 REAR | 33-12-10 | 1004-1104 |
| E1700 | C/B PANEL-UTILITY | 242 REAR | 33-12-30 | 1004-1104 |
| E1700 | C/B PANEL-UTILITY | 242 REAR | 33-12-40 | 1004-1104 |
| E1700 | C/B PANEL-UTILITY | 242 REAR | 33-12-60 | 1004-1104 |
| E1700 | C/B PANEL-UTILITY | 242 REAR | 33-20-10 | 1004-1104 |
| E1700 | C/B PANEL-UTILITY | 242 REAR | 33-20-20 | 1004-1104 |
| E1700 | C/B PANEL-UTILITY | 242 REAR | 33-20-30 | 1004-1104 |
| E1700 | C/B PANEL-UTILITY | 242 REAR | 33-20-40 | 1004-1104 |
| E1700 | C/B PANEL-UTILITY | 242 REAR | 33-21-10 | 1004-1104 |
| E1700 | C/B PANEL-UTILITY | 242 REAR | 33-21-20 | 1004-1104 |
| E1700 | C/B PANEL-UTILITY | 242 REAR | 33-21-50 | 1004-1104 |
| E1700 | C/B PANEL-UTILITY | 242 REAR | 33-21-60 | 1004-1104 |
| E1700 | C/B PANEL-UTILITY | 242 REAR | 33-24-00 | 1004-1104 |
| E1700 | C/B PANEL-UTILITY | 242 REAR | 33-25-00 | 1004-1104 |
| E1701 | HOT WATER TANK | 232 TOILET | 25-42-00 | 1004-1104 |

| CODE | NOMENCLATURE | LOCATION | MANUAL REF | EFF. |
|---|---|---|---|---|
| E1705 | INVERTER | 242 | 33-12-00 | 1004-1104 |
| E1705 | INVERTER | 242 | 33-12-10 | 1004-1104 |
| E1705 | INVERTER | 242 | 33-12-40 | 1004-1104 |
| E1705 | INVERTER | 242 | 33-12-50 | 1004-1104 |
| E1705 | INVERTER | 242 | 33-12-60 | 1004-1104 |
| E1706 | POWER SUPPLY | 241 | 33-12-00 | 1004-1104 |
| E1706 | POWER SUPPLY | 241 | 33-12-10 | 1004-1104 |
| E1706 | POWER SUPPLY | 241 | 33-12-40 | 1004-1104 |
| E1706 | POWER SUPPLY | 241 | 33-12-50 | 1004-1104 |
| E1706 | POWER SUPPLY | 241 | 33-12-60 | 1004-1104 |
| E1707 | POWER SUPPLY | 242 | 33-12-00 | 1004-1104 |
| E1707 | POWER SUPPLY | 242 | 33-12-10 | 1004-1104 |
| E1707 | POWER SUPPLY | 242 | 33-12-40 | 1004-1104 |
| E1707 | POWER SUPPLY | 242 | 33-12-50 | 1004-1104 |
| E1707 | POWER SUPPLY | 242 | 33-12-60 | 1004-1104 |
| E1708 | POWER SUPPLY | 241 | 33-12-00 | 1004-1104 |
| E1708 | POWER SUPPLY | 241 | 33-12-10 | 1004-1104 |
| E1708 | POWER SUPPLY | 241 | 33-12-40 | 1004-1104 |
| E1708 | POWER SUPPLY | 241 | 33-12-50 | 1004-1104 |
| E1708 | POWER SUPPLY | 241 | 33-12-60 | 1004-1104 |
| E1709 | POWER SUPPLY | 242 | 33-12-00 | 1004-1104 |
| E1709 | POWER SUPPLY | 242 | 33-12-10 | 1004-1104 |
| E1709 | POWER SUPPLY | 242 | 33-12-40 | 1004-1104 |
| E1709 | POWER SUPPLY | 242 | 33-12-50 | 1004-1104 |
| E1709 | POWER SUPPLY | 242 | 33-12-60 | 1004-1104 |
| E1710 | POWER SUPPLY | 241 | 33-12-00 | 1004-1104 |
| E1710 | POWER SUPPLY | 241 | 33-12-10 | 1004-1104 |
| E1710 | POWER SUPPLY | 241 | 33-12-40 | 1004-1104 |
| E1710 | POWER SUPPLY | 241 | 33-12-50 | 1004-1104 |
| E1710 | POWER SUPPLY | 241 | 33-12-60 | 1004-1104 |
| E1711 | POWER SUPPLY | 242 | 33-12-00 | 1004-1104 |
| E1711 | POWER SUPPLY | 242 | 33-12-10 | 1004-1104 |
| E1711 | POWER SUPPLY | 242 | 33-12-40 | 1004-1104 |
| E1711 | POWER SUPPLY | 242 | 33-12-50 | 1004-1104 |
| E1711 | POWER SUPPLY | 242 | 33-12-60 | 1004-1104 |
| E1725 | INVERTER | 231 VANITY | 33-25-00 | 1004-1104 |
| E1726 | INVERTER | TBD | 33-25-00 | 1004-1104 |
| E1800 | AC/DC CIRCUIT SPC | 232 | 21-23-00 | 1004-1104 |
| E1800 | AC/DC CIRCUIT SPC | 232 | 33-12-00 | 1004-1104 |
| E1800 | AC/DC CIRCUIT SPC | 232 | 33-12-10 | 1004-1104 |
| E1800 | AC/DC CIRCUIT SPC | 232 | 33-12-30 | 1004-1104 |

| CODE | NOMENCLATURE | LOCATION | MANUAL REF | EFF. |
|---|---|---|---|---|
| E1800 | AC/DC CIRCUIT SPC | 232 | 33-12-40 | 1004-1104 |
| E1800 | AC/DC CIRCUIT SPC | 232 | 33-12-60 | 1004-1104 |
| E1800 | AC/DC CIRCUIT SPC | 232 | 33-20-10 | 1004-1104 |
| E1800 | AC/DC CIRCUIT SPC | 232 | 33-20-20 | 1004-1104 |
| E1800 | AC/DC CIRCUIT SPC | 232 | 33-20-30 | 1004-1104 |
| E1800 | AC/DC CIRCUIT SPC | 232 | 33-20-40 | 1004-1104 |
| E1800 | AC/DC CIRCUIT SPC | 232 | 33-22-10 | 1004-1104 |
| E1800 | AC/DC CIRCUIT SPC | 232 | 33-22-20 | 1004-1104 |
| E1800 | AC/DC CIRCUIT SPC | 232 | 33-22-40 | 1004-1104 |
| E1800 | AC/DC CIRCUIT SPC | 232 | 33-22-50 | 1004-1104 |
| E1800 | AC/DC CIRCUIT SPC | 232 | 33-22-60 | 1004-1104 |
| E1800 | AC/DC CIRCUIT SPC | 232 | 33-22-70 | 1004-1104 |
| E1800 | AC/DC CIRCUIT SPC | 232 | 33-23-00 | 1004-1104 |
| E1800 | AC/DC CIRCUIT SPC | 232 | 33-24-00 | 1004-1104 |
| E1800 | AC/DC CIRCUIT SPC | 232 | 33-25-00 | 1004-1104 |
| E1800 | AC/DC CIRCUIT SPC | 232 | 33-27-00 | 1004-1104 |
| E1810 | AC/DC CIRCUIT SPC | 231 | 21-23-00 | 1004-1104 |
| E1810 | AC/DC CIRCUIT SPC | 231 | 33-12-00 | 1004-1104 |
| E1810 | AC/DC CIRCUIT SPC | 231 | 33-12-10 | 1004-1104 |
| E1810 | AC/DC CIRCUIT SPC | 231 | 33-12-30 | 1004-1104 |
| E1810 | AC/DC CIRCUIT SPC | 231 | 33-12-40 | 1004-1104 |
| E1810 | AC/DC CIRCUIT SPC | 231 | 33-12-50 | 1004-1104 |
| E1810 | AC/DC CIRCUIT SPC | 231 | 33-12-60 | 1004-1104 |
| E1810 | AC/DC CIRCUIT SPC | 231 | 33-13-00 | 1004-1104 |
| E1810 | AC/DC CIRCUIT SPC | 231 | 33-20-10 | 1004-1104 |
| E1810 | AC/DC CIRCUIT SPC | 231 | 33-20-20 | 1004-1104 |
| E1810 | AC/DC CIRCUIT SPC | 231 | 33-20-30 | 1004-1104 |
| E1810 | AC/DC CIRCUIT SPC | 231 | 33-20-40 | 1004-1104 |
| E1810 | AC/DC CIRCUIT SPC | 231 | 33-22-10 | 1004-1104 |
| E1810 | AC/DC CIRCUIT SPC | 231 | 33-22-20 | 1004-1104 |
| E1810 | AC/DC CIRCUIT SPC | 231 | 33-22-40 | 1004-1104 |
| E1810 | AC/DC CIRCUIT SPC | 231 | 33-22-50 | 1004-1104 |
| E1810 | AC/DC CIRCUIT SPC | 231 | 33-22-60 | 1004-1104 |
| E1810 | AC/DC CIRCUIT SPC | 231 | 33-22-70 | 1004-1104 |
| E1810 | AC/DC CIRCUIT SPC | 231 | 33-23-00 | 1004-1104 |
| E1822 | SWITCH PAD | 231 / 232 | 33-12-00 | 1004-1104 |
| E1822 | SWITCH PAD | 231 / 232 | 33-12-10 | 1004-1104 |
| E1822 | SWITCH PAD | 231 / 232 | 33-12-40 | 1004-1104 |
| E1822 | SWITCH PAD | 231 / 232 | 33-12-50 | 1004-1104 |
| E1822 | SWITCH PAD | 231 / 232 | 33-20-10 | 1004-1104 |
| E1822 | SWITCH PAD | 231 / 232 | 33-20-20 | 1004-1104 |

| CODE | NOMENCLATURE | LOCATION | MANUAL REF | EFF. |
|---|---|---|---|---|
| E1822 | SWITCH PAD | 231 / 232 | 33-20-30 | 1004-1104 |
| E1822 | SWITCH PAD | 231 / 232 | 33-20-40 | 1004-1104 |
| E1822 | SWITCH PAD | 231 / 232 | 33-21-10 | 1004-1104 |
| E1822 | SWITCH PAD | 231 / 232 | 33-21-20 | 1004-1104 |
| E1822 | SWITCH PAD | 231 / 232 | 33-21-50 | 1004-1104 |
| E1822 | SWITCH PAD | 231 / 232 | 33-21-60 | 1004-1104 |
| E1822 | SWITCH PAD | 231 / 232 | 33-22-10 | 1004-1104 |
| E1822 | SWITCH PAD | 231 / 232 | 33-22-20 | 1004-1104 |
| E1822 | SWITCH PAD | 231 / 232 | 33-22-50 | 1004-1104 |
| E1822 | SWITCH PAD | 231 / 232 | 33-22-60 | 1004-1104 |
| E1822 | SWITCH PAD | 231 / 232 | 33-23-00 | 1004-1104 |
| E1822 | SWITCH PAD | 231 / 232 | 33-27-00 | 1004-1104 |
| E1823A | SWITCH PAD | 231 / 232 | 33-12-00 | 1004-1104 |
| E1823A | SWITCH PAD | 231 / 232 | 33-12-40 | 1004-1104 |
| E1823A | SWITCH PAD | 231 / 232 | 33-20-10 | 1004-1104 |
| E1823A | SWITCH PAD | 231 / 232 | 33-20-30 | 1004-1104 |
| E1823A | SWITCH PAD | 231 / 232 | 33-21-50 | 1004-1104 |
| E1823A | SWITCH PAD | 231 / 232 | 33-22-50 | 1004-1104 |
| E1855A | SWITCH PAD | 231 / 232 | 33-20-10 | 1004-1104 |
| E1855A | SWITCH PAD | 231 / 232 | 33-20-30 | 1004-1104 |
| E1855A | SWITCH PAD | 231 / 232 | 33-21-10 | 1004-1104 |
| E1855A | SWITCH PAD | 231 / 232 | 33-21-20 | 1004-1104 |
| E1855A | SWITCH PAD | 231 / 232 | 33-21-50 | 1004-1104 |
| E1855A | SWITCH PAD | 231 / 232 | 33-22-10 | 1004-1104 |
| E1855A | SWITCH PAD | 231 / 232 | 33-22-20 | 1004-1104 |
| E1855A | SWITCH PAD | 231 / 232 | 33-22-50 | 1004-1104 |
| E1865A | SWITCH PAD | 231 / 232 | 33-20-10 | 1004-1104 |
| E1865A | SWITCH PAD | 231 / 232 | 33-20-30 | 1004-1104 |
| E1865A | SWITCH PAD | 231 / 232 | 33-21-10 | 1004-1104 |
| E1865A | SWITCH PAD | 231 / 232 | 33-21-50 | 1004-1104 |
| E1865A | SWITCH PAD | 231 / 232 | 33-22-10 | 1004-1104 |
| E1865A | SWITCH PAD | 231 / 232 | 33-22-50 | 1004-1104 |
| E1865A | SWITCH PAD | 231 / 232 | 33-22-60 | 1004-1104 |
| E1874 | SWITCH PAD | 231 / 232 | 33-20-10 | 1004-1104 |
| E1874 | SWITCH PAD | 231 / 232 | 33-20-20 | 1004-1104 |
| E1874 | SWITCH PAD | 231 / 232 | 33-20-30 | 1004-1104 |
| E1874 | SWITCH PAD | 231 / 232 | 33-21-10 | 1004-1104 |
| E1874 | SWITCH PAD | 231 / 232 | 33-21-20 | 1004-1104 |
| E1874 | SWITCH PAD | 231 / 232 | 33-21-50 | 1004-1104 |
| E1874 | SWITCH PAD | 231 / 232 | 33-22-10 | 1004-1104 |
| E1874 | SWITCH PAD | 231 / 232 | 33-22-20 | 1004-1104 |

| CODE | NOMENCLATURE | LOCATION | MANUAL REF | EFF. |
|---|---|---|---|---|
| E1874 | SWITCH PAD | 231 / 232 | 33-22-50 | 1004-1104 |
| E1874 | SWITCH PAD | 231 / 232 | 33-23-00 | 1004-1104 |
| E1875A | SWITCH PAD | 231 / 232 | 33-20-10 | 1004-1104 |
| E1875A | SWITCH PAD | 231 / 232 | 33-20-30 | 1004-1104 |
| E1875A | SWITCH PAD | 231 / 232 | 33-21-50 | 1004-1104 |
| E1875A | SWITCH PAD | 231 / 232 | 33-21-60 | 1004-1104 |
| E1875A | SWITCH PAD | 231 / 232 | 33-22-50 | 1004-1104 |
| E1884 | SWITCH PAD | 231 / 232 | 33-20-10 | 1004-1104 |
| E1884 | SWITCH PAD | 231 / 232 | 33-20-20 | 1004-1104 |
| E1884 | SWITCH PAD | 231 / 232 | 33-20-30 | 1004-1104 |
| E1884 | SWITCH PAD | 231 / 232 | 33-21-10 | 1004-1104 |
| E1884 | SWITCH PAD | 231 / 232 | 33-21-20 | 1004-1104 |
| E1884 | SWITCH PAD | 231 / 232 | 33-21-50 | 1004-1104 |
| E1884 | SWITCH PAD | 231 / 232 | 33-22-10 | 1004-1104 |
| E1884 | SWITCH PAD | 231 / 232 | 33-22-20 | 1004-1104 |
| E1884 | SWITCH PAD | 231 / 232 | 33-22-50 | 1004-1104 |
| E1884 | SWITCH PAD | 231 / 232 | 33-23-00 | 1004-1104 |
| E1885A | SWITCH PAD | 231 / 232 | 33-20-10 | 1004-1104 |
| E1885A | SWITCH PAD | 231 / 232 | 33-20-30 | 1004-1104 |
| E1885A | SWITCH PAD | 231 / 232 | 33-21-50 | 1004-1104 |
| E1885A | SWITCH PAD | 231 / 232 | 33-22-50 | 1004-1104 |
| E1892 | SWITCH PAD | 231 / 232 | 33-12-00 | 1004-1104 |
| E1892 | SWITCH PAD | 231 / 232 | 33-12-10 | 1004-1104 |
| E1892 | SWITCH PAD | 231 / 232 | 33-12-40 | 1004-1104 |
| E1892 | SWITCH PAD | 231 / 232 | 33-20-10 | 1004-1104 |
| E1892 | SWITCH PAD | 231 / 232 | 33-20-20 | 1004-1104 |
| E1892 | SWITCH PAD | 231 / 232 | 33-20-30 | 1004-1104 |
| E1892 | SWITCH PAD | 231 / 232 | 33-21-10 | 1004-1104 |
| E1892 | SWITCH PAD | 231 / 232 | 33-21-20 | 1004-1104 |
| E1892 | SWITCH PAD | 231 / 232 | 33-21-50 | 1004-1104 |
| E1892 | SWITCH PAD | 231 / 232 | 33-22-10 | 1004-1104 |
| E1892 | SWITCH PAD | 231 / 232 | 33-22-20 | 1004-1104 |
| E1892 | SWITCH PAD | 231 / 232 | 33-22-50 | 1004-1104 |
| E1892 | SWITCH PAD | 231 / 232 | 33-23-00 | 1004-1104 |
| E1893A | SWITCH PAD | 231 / 232 | 33-12-00 | 1004-1104 |
| E1893A | SWITCH PAD | 231 / 232 | 33-12-40 | 1004-1104 |
| E1893A | SWITCH PAD | 231 / 232 | 33-20-10 | 1004-1104 |
| E1893A | SWITCH PAD | 231 / 232 | 33-20-30 | 1004-1104 |
| E1893A | SWITCH PAD | 231 / 232 | 33-21-50 | 1004-1104 |
| E1893A | SWITCH PAD | 231 / 232 | 33-22-50 | 1004-1104 |
| E1905A | SWITCH PAD | 231 / 232 | 33-20-10 | 1004-1104 |

| CODE | NOMENCLATURE | LOCATION | MANUAL REF | EFF. |
|---|---|---|---|---|
| E1905A | SWITCH PAD | 231 / 232 | 33-20-20 | 1004-1104 |
| E1905A | SWITCH PAD | 231 / 232 | 33-20-30 | 1004-1104 |
| E1905A | SWITCH PAD | 231 / 232 | 33-21-10 | 1004-1104 |
| E1905A | SWITCH PAD | 231 / 232 | 33-21-20 | 1004-1104 |
| E1905A | SWITCH PAD | 231 / 232 | 33-21-50 | 1004-1104 |
| E1905A | SWITCH PAD | 231 / 232 | 33-22-10 | 1004-1104 |
| E1905A | SWITCH PAD | 231 / 232 | 33-22-20 | 1004-1104 |
| E1905A | SWITCH PAD | 231 / 232 | 33-22-50 | 1004-1104 |
| E1915A | SWITCH PAD | 231 / 232 | 33-20-10 | 1004-1104 |
| E1915A | SWITCH PAD | 231 / 232 | 33-20-30 | 1004-1104 |
| E1915A | SWITCH PAD | 231 / 232 | 33-21-50 | 1004-1104 |
| E1915A | SWITCH PAD | 231 / 232 | 33-22-50 | 1004-1104 |
| E1926 | SWITCH PAD | 231 / 232 | 33-20-10 | 1004-1104 |
| E1926 | SWITCH PAD | 231 / 232 | 33-20-20 | 1004-1104 |
| E1926 | SWITCH PAD | 231 / 232 | 33-20-30 | 1004-1104 |
| E1926 | SWITCH PAD | 231 / 232 | 33-20-40 | 1004-1104 |
| E1926 | SWITCH PAD | 231 / 232 | 33-21-10 | 1004-1104 |
| E1926 | SWITCH PAD | 231 / 232 | 33-21-20 | 1004-1104 |
| E1926 | SWITCH PAD | 231 / 232 | 33-21-50 | 1004-1104 |
| E1926 | SWITCH PAD | 231 / 232 | 33-21-60 | 1004-1104 |
| E1926 | SWITCH PAD | 231 / 232 | 33-25-00 | 1004-1104 |
| E1951 | SWITCH PAD | 231 / 232 | 33-12-00 | 1004-1104 |
| E1951 | SWITCH PAD | 231 / 232 | 33-12-10 | 1004-1104 |
| E1951 | SWITCH PAD | 231 / 232 | 33-12-40 | 1004-1104 |
| E1951 | SWITCH PAD | 231 / 232 | 33-12-50 | 1004-1104 |
| E1951 | SWITCH PAD | 231 / 232 | 33-20-10 | 1004-1104 |
| E1951 | SWITCH PAD | 231 / 232 | 33-20-20 | 1004-1104 |
| E1951 | SWITCH PAD | 231 / 232 | 33-20-30 | 1004-1104 |
| E1951 | SWITCH PAD | 231 / 232 | 33-20-40 | 1004-1104 |
| E1951 | SWITCH PAD | 231 / 232 | 33-21-10 | 1004-1104 |
| E1951 | SWITCH PAD | 231 / 232 | 33-21-20 | 1004-1104 |
| E1951 | SWITCH PAD | 231 / 232 | 33-21-50 | 1004-1104 |
| E1951 | SWITCH PAD | 231 / 232 | 33-21-60 | 1004-1104 |
| E2 | CONTROL UNIT-GENERATOR R | 282 | 24-30-00 | 1004-1104 |
| E2 | CONTROL UNIT-GENERATOR R | 282 | 24-61-00 | 1004-1104 |
| E2 | CONTROL UNIT-GENERATOR R | 282 | 26-20-00 | 1004-1104 |
| E22 | ENG/FUEL CONTROL PNL | 213 | 24-30-00 | 1004-1104 |
| E22 | ENG/FUEL CONTROL PNL | 213 | 28-20-00 | 1004-1104 |
| E22 | ENG/FUEL CONTROL PNL | 213 | 31-13-10 | 1004-1104 |
| E22 | ENG/FUEL CONTROL PNL | 213 | 33-10-20 | 1004-1104 |
| E22 | ENG/FUEL CONTROL PNL | 213 | 61-41-00 | 1004-1104 |

| CODE | NOMENCLATURE | LOCATION | MANUAL REF | EFF. |
|---|---|---|---|---|
| E25 | SWITCH PANEL-PILOT | 214 | 21-10-00 | 1004-1104 |
| E25 | SWITCH PANEL-PILOT | 214 | 21-20-00 | 1004-1104 |
| E25 | SWITCH PANEL-PILOT | 214 | 21-22-00 | 1004-1104 |
| E25 | SWITCH PANEL-PILOT | 214 | 21-31-00 | 1004-1104 |
| E25 | SWITCH PANEL-PILOT | 214 | 21-40-00 | 1004-1104 |
| E25 | SWITCH PANEL-PILOT | 214 | 26-10-00 | 1004-1104 |
| E25 | SWITCH PANEL-PILOT | 214 | 27-32-00 | 1004-1104 |
| E25 | SWITCH PANEL-PILOT | 214 | 27-50-00 | 1004-1104 |
| E25 | SWITCH PANEL-PILOT | 214 | 28-41-00 | 1004-1104 |
| E25 | SWITCH PANEL-PILOT | 214 | 29-10-00 | 1004-1104 |
| E25 | SWITCH PANEL-PILOT | 214 | 29-30-00 | 1004-1104 |
| E25 | SWITCH PANEL-PILOT | 214 | 30-11-00 | 1004-1104 |
| E25 | SWITCH PANEL-PILOT | 214 | 30-12-00 | 1004-1104 |
| E25 | SWITCH PANEL-PILOT | 214 | 30-22-00 | 1004-1104 |
| E25 | SWITCH PANEL-PILOT | 214 | 30-23-00 | 1004-1104 |
| E25 | SWITCH PANEL-PILOT | 214 | 30-24-00 | 1004-1104 |
| E25 | SWITCH PANEL-PILOT | 214 | 30-30-00 | 1004-1104 |
| E25 | SWITCH PANEL-PILOT | 214 | 30-31-00 | 1004-1104 |
| E25 | SWITCH PANEL-PILOT | 214 | 30-40-00 | 1004-1104 |
| E25 | SWITCH PANEL-PILOT | 214 | 30-80-00 | 1004-1104 |
| E25 | SWITCH PANEL-PILOT | 214 | 31-12-10 | 1004-1104 |
| E25 | SWITCH PANEL-PILOT | 214 | 31-19-11 | 1004-1104 |
| E25 | SWITCH PANEL-PILOT | 214 | 31-50-00 | 1004-1104 |
| E25 | SWITCH PANEL-PILOT | 214 | 31-60-00 | 1004-1104 |
| E25 | SWITCH PANEL-PILOT | 214 | 32-30-00 | 1004-1104 |
| E25 | SWITCH PANEL-PILOT | 214 | 32-51-00 | 1004-1104 |
| E25 | SWITCH PANEL-PILOT | 214 | 32-60-00 | 1004-1104 |
| E25 | SWITCH PANEL-PILOT | 214 | 33-10-20 | 1004-1104 |
| E25 | SWITCH PANEL-PILOT | 214 | 33-26-00 | 1004-1104 |
| E25 | SWITCH PANEL-PILOT | 214 | 33-40-00 | 1004-1104 |
| E25 | SWITCH PANEL-PILOT | 214 | 34-10-00 | 1004-1104 |
| E25 | SWITCH PANEL-PILOT | 214 | 34-23-00 | 1004-1104 |
| E25 | SWITCH PANEL-PILOT | 214 | 34-43-00 | 1004-1104 |
| E25 | SWITCH PANEL-PILOT | 214 | 34-44-00 | 1004-1104 |
| E25 | SWITCH PANEL-PILOT | 214 | 34-45-00 | 1004-1104 |
| E25 | SWITCH PANEL-PILOT | 214 | 34-56-00 | 1004-1104 |
| E25 | SWITCH PANEL-PILOT | 214 | 34-59-10 | 1004-1104 |
| E25 | SWITCH PANEL-PILOT | 214 | 34-59-20 | 1004-1104 |
| E25 | SWITCH PANEL-PILOT | 214 | 34-59-30 | 1004-1104 |
| E25 | SWITCH PANEL-PILOT | 214 | 34-59-40 | 1004-1104 |
| E25 | SWITCH PANEL-PILOT | 214 | 34-59-60 | 1004-1104 |

| CODE | NOMENCLATURE | LOCATION | MANUAL REF | EFF. |
|---|---|---|---|---|
| E25 | SWITCH PANEL-PILOT | 214 | 34-59-70 | 1004-1104 |
| E25 | SWITCH PANEL-PILOT | 214 | 34-59-80 | 1004-1104 |
| E25 | SWITCH PANEL-PILOT | 214 | 34-59-90 | 1004-1104 |
| E25 | SWITCH PANEL-PILOT | 214 | 61-41-00 | 1004-1104 |
| E25 | SWITCH PANEL-PILOT | 214 | 73-30-00 | 1004-1104 |
| E25 | SWITCH PANEL-PILOT | 214 | 77-10-00 | 1004-1104 |
| E25 | SWITCH PANEL-PILOT | 214 | 77-11-00 | 1004-1104 |
| E25 | SWITCH PANEL-PILOT | 214 | 77-20-00 | 1004-1104 |
| E25 | SWITCH PANEL-PILOT | 214 | 79-20-00 | 1004-1104 |
| E25 | SWITCH PANEL-PILOT | 214 | 79-31-00 | 1004-1104 |
| E26 | CONTROL BOX-DEICE | 232 COCKT | 30-22-00 | 1004-1104 |
| E27 | COMPUTER-STALL WRN | 232 | 27-32-00 | 1004-1104 |
| E27 | COMPUTER-STALL WRN | 232 | 34-44-00 | 1004-1104 |
| E28 | TIMER-ENG INLET DEICE | 232 COCKT | 30-22-00 | 1004-1104 |
| E29 | MASTER WRN/CAUTION | 223 | 30-80-00 | 1004-1104 |
| E29 | MASTER WRN/CAUTION | 223 | 31-19-11 | 1004-1104 |
| E29 | MASTER WRN/CAUTION | 223 | 31-50-00 | 1004-1104 |
| E29 | MASTER WRN/CAUTION | 223 | 31-52-00 | 1004-1104 |
| E29 | MASTER WRN/CAUTION | 223 | 33-10-20 | 1004-1104 |
| E30 | C/B PANEL COPILOT | 216 | 21-10-00 | 1004-1104 |
| E30 | C/B PANEL COPILOT | 216 | 21-20-00 | 1004-1104 |
| E30 | C/B PANEL COPILOT | 216 | 21-31-00 | 1004-1104 |
| E30 | C/B PANEL COPILOT | 216 | 21-40-00 | 1004-1104 |
| E30 | C/B PANEL COPILOT | 216 | 21-41-00 | 1004-1104 |
| E30 | C/B PANEL COPILOT | 216 | 21-51-00 | 1004-1104 |
| E30 | C/B PANEL COPILOT | 216 | 21-52-00 | 1004-1104 |
| E30 | C/B PANEL COPILOT | 216 | 21-60-00 | 1004-1104 |
| E30 | C/B PANEL COPILOT | 216 | 22-10-00 | 1004-1104 |
| E30 | C/B PANEL COPILOT | 216 | 23-12-20 | 1004-1104 |
| E30 | C/B PANEL COPILOT | 216 | 23-13-20 | 1004-1104 |
| E30 | C/B PANEL COPILOT | 216 | 23-14-00 | 1004-1104 |
| E30 | C/B PANEL COPILOT | 216 | 23-50-00 | 1004-1104 |
| E30 | C/B PANEL COPILOT | 216 | 23-52-00 | 1004-1104 |
| E30 | C/B PANEL COPILOT | 216 | 24-20-00 | 1004-1104 |
| E30 | C/B PANEL COPILOT | 216 | 24-30-00 | 1004-1104 |
| E30 | C/B PANEL COPILOT | 216 | 24-61-00 | 1004-1104 |
| E30 | C/B PANEL COPILOT | 216 | 24-63-00 | 1004-1104 |
| E30 | C/B PANEL COPILOT | 216 | 25-61-00 | 1004-1104 |
| E30 | C/B PANEL COPILOT | 216 | 25-63-00 | 1004-1104 |
| E30 | C/B PANEL COPILOT | 216 | 26-10-00 | 1004-1104 |
| E30 | C/B PANEL COPILOT | 216 | 27-00-00 | 1004-1104 |

| CODE | NOMENCLATURE | LOCATION | MANUAL REF | EFF. |
|---|---|---|---|---|
| E30 | C/B PANEL COPILOT | 216 | 27-50-00 | 1004-1104 |
| E30 | C/B PANEL COPILOT | 216 | 28-20-00 | 1004-1104 |
| E30 | C/B PANEL COPILOT | 216 | 28-41-00 | 1004-1104 |
| E30 | C/B PANEL COPILOT | 216 | 30-11-00 | 1004-1104 |
| E30 | C/B PANEL COPILOT | 216 | 30-12-00 | 1004-1104 |
| E30 | C/B PANEL COPILOT | 216 | 30-22-00 | 1004-1104 |
| E30 | C/B PANEL COPILOT | 216 | 30-23-00 | 1004-1104 |
| E30 | C/B PANEL COPILOT | 216 | 30-24-00 | 1004-1104 |
| E30 | C/B PANEL COPILOT | 216 | 30-30-00 | 1004-1104 |
| E30 | C/B PANEL COPILOT | 216 | 30-31-00 | 1004-1104 |
| E30 | C/B PANEL COPILOT | 216 | 30-40-00 | 1004-1104 |
| E30 | C/B PANEL COPILOT | 216 | 31-12-60 | 1004-1104 |
| E30 | C/B PANEL COPILOT | 216 | 31-20-00 | 1004-1104 |
| E30 | C/B PANEL COPILOT | 216 | 32-43-00 | 1004-1104 |
| E30 | C/B PANEL COPILOT | 216 | 33-10-20 | 1004-1104 |
| E30 | C/B PANEL COPILOT | 216 | 33-22-10 | 1004-1104 |
| E30 | C/B PANEL COPILOT | 216 | 33-22-20 | 1004-1104 |
| E30 | C/B PANEL COPILOT | 216 | 33-22-40 | 1004-1104 |
| E30 | C/B PANEL COPILOT | 216 | 33-22-50 | 1004-1104 |
| E30 | C/B PANEL COPILOT | 216 | 33-22-60 | 1004-1104 |
| E30 | C/B PANEL COPILOT | 216 | 33-22-70 | 1004-1104 |
| E30 | C/B PANEL COPILOT | 216 | 33-27-00 | 1004-1104 |
| E30 | C/B PANEL COPILOT | 216 | 33-40-00 | 1004-1104 |
| E30 | C/B PANEL COPILOT | 216 | 34-11-00 | 1004-1104 |
| E30 | C/B PANEL COPILOT | 216 | 34-13-00 | 1004-1104 |
| E30 | C/B PANEL COPILOT | 216 | 34-21-00 | 1004-1104 |
| E30 | C/B PANEL COPILOT | 216 | 34-22-00 | 1004-1104 |
| E30 | C/B PANEL COPILOT | 216 | 34-24-00 | 1004-1104 |
| E30 | C/B PANEL COPILOT | 216 | 34-28-00 | 1004-1104 |
| E30 | C/B PANEL COPILOT | 216 | 34-41-00 | 1004-1104 |
| E30 | C/B PANEL COPILOT | 216 | 34-42-00 | 1004-1104 |
| E30 | C/B PANEL COPILOT | 216 | 34-43-00 | 1004-1104 |
| E30 | C/B PANEL COPILOT | 216 | 34-44-00 | 1004-1104 |
| E30 | C/B PANEL COPILOT | 216 | 34-52-00 | 1004-1104 |
| E30 | C/B PANEL COPILOT | 216 | 34-53-00 | 1004-1104 |
| E30 | C/B PANEL COPILOT | 216 | 34-54-00 | 1004-1104 |
| E30 | C/B PANEL COPILOT | 216 | 34-54-20 | 1004-1104 |
| E30 | C/B PANEL COPILOT | 216 | 34-54-21 | 1004-1104 |
| E30 | C/B PANEL COPILOT | 216 | 34-55-00 | 1004-1104 |
| E30 | C/B PANEL COPILOT | 216 | 34-56-00 | 1004-1104 |
| E30 | C/B PANEL COPILOT | 216 | 34-56-10 | 1004-1104 |

| CODE | NOMENCLATURE | LOCATION | MANUAL REF | EFF. |
|---|---|---|---|---|
| E30 | C/B PANEL COPILOT | 216 | 34-56-20 | 1004-1104 |
| E30 | C/B PANEL COPILOT | 216 | 34-57-00 | 1004-1104 |
| E30 | C/B PANEL COPILOT | 216 | 34-59-10 | 1004-1104 |
| E30 | C/B PANEL COPILOT | 216 | 34-59-20 | 1004-1104 |
| E30 | C/B PANEL COPILOT | 216 | 34-59-30 | 1004-1104 |
| E30 | C/B PANEL COPILOT | 216 | 34-59-40 | 1004-1104 |
| E30 | C/B PANEL COPILOT | 216 | 34-59-41 | 1004-1104 |
| E30 | C/B PANEL COPILOT | 216 | 34-59-60 | 1004-1104 |
| E30 | C/B PANEL COPILOT | 216 | 34-59-70 | 1004-1104 |
| E30 | C/B PANEL COPILOT | 216 | 34-59-80 | 1004-1104 |
| E30 | C/B PANEL COPILOT | 216 | 34-59-90 | 1004-1104 |
| E30 | C/B PANEL COPILOT | 216 | 45-45-00 | 1004-1104 |
| E30 | C/B PANEL COPILOT | 216 | 45-60-00 | 1004-1104 |
| E30 | C/B PANEL COPILOT | 216 | 61-20-00 | 1004-1104 |
| E30 | C/B PANEL COPILOT | 216 | 61-21-00 | 1004-1104 |
| E30 | C/B PANEL COPILOT | 216 | 61-41-00 | 1004-1104 |
| E30 | C/B PANEL COPILOT | 216 | 73-30-00 | 1004-1104 |
| E30 | C/B PANEL COPILOT | 216 | 77-10-00 | 1004-1104 |
| E30 | C/B PANEL COPILOT | 216 | 77-11-00 | 1004-1104 |
| E30 | C/B PANEL COPILOT | 216 | 77-20-00 | 1004-1104 |
| E30 | C/B PANEL COPILOT | 216 | 79-20-00 | 1004-1104 |
| E30 | C/B PANEL COPILOT | 216 | 79-31-00 | 1004-1104 |
| E31 | C/B PANEL PILOT | 215 | 21-10-00 | 1004-1104 |
| E31 | C/B PANEL PILOT | 215 | 21-20-00 | 1004-1104 |
| E31 | C/B PANEL PILOT | 215 | 21-22-00 | 1004-1104 |
| E31 | C/B PANEL PILOT | 215 | 21-40-00 | 1004-1104 |
| E31 | C/B PANEL PILOT | 215 | 23-11-20 | 1004-1104 |
| E31 | C/B PANEL PILOT | 215 | 23-50-00 | 1004-1104 |
| E31 | C/B PANEL PILOT | 215 | 23-70-00 | 1004-1104 |
| E31 | C/B PANEL PILOT | 215 | 24-20-00 | 1004-1104 |
| E31 | C/B PANEL PILOT | 215 | 24-30-00 | 1004-1104 |
| E31 | C/B PANEL PILOT | 215 | 24-61-00 | 1004-1104 |
| E31 | C/B PANEL PILOT | 215 | 24-64-00 | 1004-1104 |
| E31 | C/B PANEL PILOT | 215 | 27-00-00 | 1004-1104 |
| E31 | C/B PANEL PILOT | 215 | 27-32-00 | 1004-1104 |
| E31 | C/B PANEL PILOT | 215 | 28-20-00 | 1004-1104 |
| E31 | C/B PANEL PILOT | 215 | 28-41-00 | 1004-1104 |
| E31 | C/B PANEL PILOT | 215 | 29-10-00 | 1004-1104 |
| E31 | C/B PANEL PILOT | 215 | 29-30-00 | 1004-1104 |
| E31 | C/B PANEL PILOT | 215 | 30-11-00 | 1004-1104 |
| E31 | C/B PANEL PILOT | 215 | 30-12-00 | 1004-1104 |

| CODE | NOMENCLATURE | LOCATION | MANUAL REF | EFF. |
|---|---|---|---|---|
| E31 | C/B PANEL PILOT | 215 | 30-24-00 | 1004-1104 |
| E31 | C/B PANEL PILOT | 215 | 30-30-00 | 1004-1104 |
| E31 | C/B PANEL PILOT | 215 | 30-32-00 | 1004-1104 |
| E31 | C/B PANEL PILOT | 215 | 30-40-00 | 1004-1104 |
| E31 | C/B PANEL PILOT | 215 | 30-80-00 | 1004-1104 |
| E31 | C/B PANEL PILOT | 215 | 31-12-50 | 1004-1104 |
| E31 | C/B PANEL PILOT | 215 | 31-19-11 | 1004-1104 |
| E31 | C/B PANEL PILOT | 215 | 31-50-00 | 1004-1104 |
| E31 | C/B PANEL PILOT | 215 | 31-51-00 | 1004-1104 |
| E31 | C/B PANEL PILOT | 215 | 31-52-00 | 1004-1104 |
| E31 | C/B PANEL PILOT | 215 | 31-53-00 | 1004-1104 |
| E31 | C/B PANEL PILOT | 215 | 31-60-00 | 1004-1104 |
| E31 | C/B PANEL PILOT | 215 | 32-30-00 | 1004-1104 |
| E31 | C/B PANEL PILOT | 215 | 32-51-00 | 1004-1104 |
| E31 | C/B PANEL PILOT | 215 | 32-60-00 | 1004-1104 |
| E31 | C/B PANEL PILOT | 215 | 33-10-10 | 1004-1104 |
| E31 | C/B PANEL PILOT | 215 | 33-10-20 | 1004-1104 |
| E31 | C/B PANEL PILOT | 215 | 33-40-00 | 1004-1104 |
| E31 | C/B PANEL PILOT | 215 | 34-10-00 | 1004-1104 |
| E31 | C/B PANEL PILOT | 215 | 34-21-00 | 1004-1104 |
| E31 | C/B PANEL PILOT | 215 | 34-22-00 | 1004-1104 |
| E31 | C/B PANEL PILOT | 215 | 34-23-00 | 1004-1104 |
| E31 | C/B PANEL PILOT | 215 | 34-25-00 | 1004-1104 |
| E31 | C/B PANEL PILOT | 215 | 34-27-00 | 1004-1104 |
| E31 | C/B PANEL PILOT | 215 | 34-28-00 | 1004-1104 |
| E31 | C/B PANEL PILOT | 215 | 34-44-00 | 1004-1104 |
| E31 | C/B PANEL PILOT | 215 | 34-45-00 | 1004-1104 |
| E31 | C/B PANEL PILOT | 215 | 34-51-00 | 1004-1104 |
| E31 | C/B PANEL PILOT | 215 | 34-54-00 | 1004-1104 |
| E31 | C/B PANEL PILOT | 215 | 34-54-10 | 1004-1104 |
| E31 | C/B PANEL PILOT | 215 | 34-54-20 | 1004-1104 |
| E31 | C/B PANEL PILOT | 215 | 34-54-21 | 1004-1104 |
| E31 | C/B PANEL PILOT | 215 | 34-54-30 | 1004-1104 |
| E31 | C/B PANEL PILOT | 215 | 34-54-40 | 1004-1104 |
| E31 | C/B PANEL PILOT | 215 | 35-10-00 | 1004-1104 |
| E31 | C/B PANEL PILOT | 215 | 61-41-00 | 1004-1104 |
| E31 | C/B PANEL PILOT | 215 | 73-30-00 | 1004-1104 |
| E31 | C/B PANEL PILOT | 215 | 77-10-00 | 1004-1104 |
| E31 | C/B PANEL PILOT | 215 | 77-11-00 | 1004-1104 |
| E31 | C/B PANEL PILOT | 215 | 77-20-00 | 1004-1104 |
| E31 | C/B PANEL PILOT | 215 | 79-31-00 | 1004-1104 |

| CODE | NOMENCLATURE | LOCATION | MANUAL REF | EFF. |
|---|---|---|---|---|
| E32 | SELECTOR-PRESSURIZATION | 214 | 21-31-00 | 1004-1104 |
| E32 | SELECTOR-PRESSURIZATION | 214 | 33-10-10 | 1004-1104 |
| E33 | CONTROLLER-PRESSURIZATION | 231-CKPT | 21-31-00 | 1004-1104 |
| E34 | DIMMER-CONTROL PANEL | 211 | 22-11-00 | 1004-1104 |
| E34 | DIMMER-CONTROL PANEL | 211 | 31-12-40 | 1004-1104 |
| E34 | DIMMER-CONTROL PANEL | 211 | 31-52-00 | 1004-1104 |
| E34 | DIMMER-CONTROL PANEL | 211 | 31-60-00 | 1004-1104 |
| E34 | DIMMER-CONTROL PANEL | 211 | 33-10-10 | 1004-1104 |
| E34 | DIMMER-CONTROL PANEL | 211 | 33-10-20 | 1004-1104 |
| E34 | DIMMER-CONTROL PANEL | 211 | 33-13-00 | 1004-1104 |
| E34 | DIMMER-CONTROL PANEL | 211 | 34-10-00 | 1004-1104 |
| E34 | DIMMER-CONTROL PANEL | 211 | 34-43-00 | 1004-1104 |
| E34 | DIMMER-CONTROL PANEL | 211 | 34-56-00 | 1004-1104 |
| E34 | DIMMER-CONTROL PANEL | 211 | 34-59-10 | 1004-1104 |
| E34 | DIMMER-CONTROL PANEL | 211 | 34-59-20 | 1004-1104 |
| E34 | DIMMER-CONTROL PANEL | 211 | 34-59-30 | 1004-1104 |
| E34 | DIMMER-CONTROL PANEL | 211 | 34-59-40 | 1004-1104 |
| E34 | DIMMER-CONTROL PANEL | 211 | 34-59-60 | 1004-1104 |
| E34 | DIMMER-CONTROL PANEL | 211 | 34-59-70 | 1004-1104 |
| E34 | DIMMER-CONTROL PANEL | 211 | 34-59-80 | 1004-1104 |
| E34 | DIMMER-CONTROL PANEL | 211 | 34-59-90 | 1004-1104 |
| E36 | PWR SUPPLY-DIMMER | 231 | 33-10-10 | 1004-1104 |
| E38 | THROTTLE QUADRANT | 213 | 21-31-00 | 1004-1104 |
| E38 | THROTTLE QUADRANT | 213 | 22-10-00 | 1004-1104 |
| E38 | THROTTLE QUADRANT | 213 | 27-50-00 | 1004-1104 |
| E38 | THROTTLE QUADRANT | 213 | 29-10-00 | 1004-1104 |
| E38 | THROTTLE QUADRANT | 213 | 29-30-00 | 1004-1104 |
| E38 | THROTTLE QUADRANT | 213 | 31-18-00 | 1004-1104 |
| E38 | THROTTLE QUADRANT | 213 | 32-30-00 | 1004-1104 |
| E38 | THROTTLE QUADRANT | 213 | 32-60-00 | 1004-1104 |
| E38 | THROTTLE QUADRANT | 213 | 33-10-20 | 1004-1104 |
| E38 | THROTTLE QUADRANT | 213 | 61-20-00 | 1004-1104 |
| E39 | CTRL PANEL-OXY PILOT | 211 | 23-50-00 | 1004-1104 |
| E39 | CTRL PANEL-OXY PILOT | 211 | 35-10-00 | 1004-1104 |
| E4 | MAIN JUNCTION BOX | 281 | 21-10-00 | 1004-1104 |
| E4 | MAIN JUNCTION BOX | 281 | 21-20-00 | 1004-1104 |
| E4 | MAIN JUNCTION BOX | 281 | 21-40-00 | 1004-1104 |
| E4 | MAIN JUNCTION BOX | 281 | 21-41-00 | 1004-1104 |
| E4 | MAIN JUNCTION BOX | 281 | 21-52-00 | 1004-1104 |
| E4 | MAIN JUNCTION BOX | 281 | 23-13-10 | 1004-1104 |
| E4 | MAIN JUNCTION BOX | 281 | 23-13-20 | 1004-1104 |

| CODE | NOMENCLATURE | LOCATION | MANUAL REF | EFF. |
|---|---|---|---|---|
| E4 | MAIN JUNCTION BOX | 281 | 24-30-00 | 1004-1104 |
| E4 | MAIN JUNCTION BOX | 281 | 24-31-00 | 1004-1104 |
| E4 | MAIN JUNCTION BOX | 281 | 24-61-00 | 1004-1104 |
| E4 | MAIN JUNCTION BOX | 281 | 24-63-00 | 1004-1104 |
| E4 | MAIN JUNCTION BOX | 281 | 26-10-00 | 1004-1104 |
| E4 | MAIN JUNCTION BOX | 281 | 26-20-00 | 1004-1104 |
| E4 | MAIN JUNCTION BOX | 281 | 27-00-00 | 1004-1104 |
| E4 | MAIN JUNCTION BOX | 281 | 27-50-00 | 1004-1104 |
| E4 | MAIN JUNCTION BOX | 281 | 28-13-00 | 1004-1104 |
| E4 | MAIN JUNCTION BOX | 281 | 28-20-00 | 1004-1104 |
| E4 | MAIN JUNCTION BOX | 281 | 29-10-00 | 1004-1104 |
| E4 | MAIN JUNCTION BOX | 281 | 29-30-00 | 1004-1104 |
| E4 | MAIN JUNCTION BOX | 281 | 30-12-00 | 1004-1104 |
| E4 | MAIN JUNCTION BOX | 281 | 30-40-00 | 1004-1104 |
| E4 | MAIN JUNCTION BOX | 281 | 31-15-10 | 1004-1104 |
| E4 | MAIN JUNCTION BOX | 281 | 32-30-00 | 1004-1104 |
| E4 | MAIN JUNCTION BOX | 281 | 32-60-00 | 1004-1104 |
| E4 | MAIN JUNCTION BOX | 281 | 45-45-00 | 1004-1104 |
| E4 | MAIN JUNCTION BOX | 281 | 45-60-00 | 1004-1104 |
| E4 | MAIN JUNCTION BOX | 281 | 61-20-00 | 1004-1104 |
| E4 | MAIN JUNCTION BOX | 281 | 79-32-00 | 1004-1104 |
| E40 | SWITCH PANEL RIGHT | 214 | 21-10-00 | 1004-1104 |
| E40 | SWITCH PANEL RIGHT | 214 | 21-20-00 | 1004-1104 |
| E40 | SWITCH PANEL RIGHT | 214 | 21-40-00 | 1004-1104 |
| E40 | SWITCH PANEL RIGHT | 214 | 21-52-00 | 1004-1104 |
| E40 | SWITCH PANEL RIGHT | 214 | 31-12-30 | 1004-1104 |
| E40 | SWITCH PANEL RIGHT | 214 | 33-10-10 | 1004-1104 |
| E42 | SWITCH PANEL-TRIM | 213 | 22-10-00 | 1004-1104 |
| E42 | SWITCH PANEL-TRIM | 213 | 27-00-00 | 1004-1104 |
| E42 | SWITCH PANEL-TRIM | 213 | 31-13-20 | 1004-1104 |
| E42 | SWITCH PANEL-TRIM | 213 | 32-51-00 | 1004-1104 |
| E42 | SWITCH PANEL-TRIM | 213 | 33-10-20 | 1004-1104 |
| E43 | HYDRAULIC PACKAGE | 251 | 29-10-00 | 1004-1104 |
| E43 | HYDRAULIC PACKAGE | 251 | 29-30-00 | 1004-1104 |
| E43 | HYDRAULIC PACKAGE | 251 | 32-30-00 | 1004-1104 |
| E43 | HYDRAULIC PACKAGE | 251 | 32-60-00 | 1004-1104 |
| E44 | POTENTIOMETER | 122 | 32-51-00 | 1004-1104 |
| E45 | POTENTIOMETER | 710 | 32-51-00 | 1004-1104 |
| E47 | PANEL-GROUND TEST | 272 | 28-13-00 | 1004-1104 |
| E47 | PANEL-GROUND TEST | 272 | 29-10-00 | 1004-1104 |
| E47 | PANEL-GROUND TEST | 272 | 29-30-00 | 1004-1104 |

| CODE | NOMENCLATURE | LOCATION | MANUAL REF | EFF. |
|---|---|---|---|---|
| E47 | PANEL-GROUND TEST | 272 | 32-30-00 | 1004-1104 |
| E47 | PANEL-GROUND TEST | 272 | 32-60-00 | 1004-1104 |
| E47 | PANEL-GROUND TEST | 272 | 79-30-00 | 1004-1104 |
| E47 | PANEL-GROUND TEST | 272 | 79-32-00 | 1004-1104 |
| E48 | CONTROL UNIT-FLAPS | 282 | 27-50-00 | 1004-1104 |
| E5 | ANNUNCIATOR PANEL | 225 | 21-10-00 | 1004-1104 |
| E5 | ANNUNCIATOR PANEL | 225 | 21-20-00 | 1004-1104 |
| E5 | ANNUNCIATOR PANEL | 225 | 21-31-00 | 1004-1104 |
| E5 | ANNUNCIATOR PANEL | 225 | 21-40-00 | 1004-1104 |
| E5 | ANNUNCIATOR PANEL | 225 | 21-51-00 | 1004-1104 |
| E5 | ANNUNCIATOR PANEL | 225 | 22-10-00 | 1004-1104 |
| E5 | ANNUNCIATOR PANEL | 225 | 24-20-00 | 1004-1104 |
| E5 | ANNUNCIATOR PANEL | 225 | 24-30-00 | 1004-1104 |
| E5 | ANNUNCIATOR PANEL | 225 | 26-10-00 | 1004-1104 |
| E5 | ANNUNCIATOR PANEL | 225 | 26-20-00 | 1004-1104 |
| E5 | ANNUNCIATOR PANEL | 225 | 27-32-00 | 1004-1104 |
| E5 | ANNUNCIATOR PANEL | 225 | 27-50-00 | 1004-1104 |
| E5 | ANNUNCIATOR PANEL | 225 | 28-20-00 | 1004-1104 |
| E5 | ANNUNCIATOR PANEL | 225 | 28-41-00 | 1004-1104 |
| E5 | ANNUNCIATOR PANEL | 225 | 29-10-00 | 1004-1104 |
| E5 | ANNUNCIATOR PANEL | 225 | 29-30-00 | 1004-1104 |
| E5 | ANNUNCIATOR PANEL | 225 | 30-11-00 | 1004-1104 |
| E5 | ANNUNCIATOR PANEL | 225 | 30-12-00 | 1004-1104 |
| E5 | ANNUNCIATOR PANEL | 225 | 30-23-00 | 1004-1104 |
| E5 | ANNUNCIATOR PANEL | 225 | 30-40-00 | 1004-1104 |
| E5 | ANNUNCIATOR PANEL | 225 | 31-50-00 | 1004-1104 |
| E5 | ANNUNCIATOR PANEL | 225 | 31-52-00 | 1004-1104 |
| E5 | ANNUNCIATOR PANEL | 225 | 31-60-00 | 1004-1104 |
| E5 | ANNUNCIATOR PANEL | 225 | 32-30-00 | 1004-1104 |
| E5 | ANNUNCIATOR PANEL | 225 | 32-51-00 | 1004-1104 |
| E5 | ANNUNCIATOR PANEL | 225 | 32-60-00 | 1004-1104 |
| E5 | ANNUNCIATOR PANEL | 225 | 33-10-20 | 1004-1104 |
| E5 | ANNUNCIATOR PANEL | 225 | 33-40-00 | 1004-1104 |
| E5 | ANNUNCIATOR PANEL | 225 | 34-12-00 | 1004-1104 |
| E5 | ANNUNCIATOR PANEL | 225 | 52-70-00 | 1004-1104 |
| E5 | ANNUNCIATOR PANEL | 225 | 61-20-00 | 1004-1104 |
| E5 | ANNUNCIATOR PANEL | 225 | 61-41-00 | 1004-1104 |
| E5 | ANNUNCIATOR PANEL | 225 | 73-30-00 | 1004-1104 |
| E5 | ANNUNCIATOR PANEL | 225 | 79-20-00 | 1004-1104 |
| E5 | ANNUNCIATOR PANEL | 225 | 79-31-00 | 1004-1104 |
| E50 | SWITCH PANEL-CENTER | 214 | 21-10-00 | 1004-1104 |

| CODE | NOMENCLATURE | LOCATION | MANUAL REF | EFF. |
|---|---|---|---|---|
| E50 | SWITCH PANEL-CENTER | 214 | 21-20-00 | 1004-1104 |
| E50 | SWITCH PANEL-CENTER | 214 | 21-31-00 | 1004-1104 |
| E50 | SWITCH PANEL-CENTER | 214 | 21-40-00 | 1004-1104 |
| E50 | SWITCH PANEL-CENTER | 214 | 21-41-00 | 1004-1104 |
| E50 | SWITCH PANEL-CENTER | 214 | 21-60-00 | 1004-1104 |
| E50 | SWITCH PANEL-CENTER | 214 | 23-11-20 | 1004-1104 |
| E50 | SWITCH PANEL-CENTER | 214 | 23-50-00 | 1004-1104 |
| E50 | SWITCH PANEL-CENTER | 214 | 24-20-00 | 1004-1104 |
| E50 | SWITCH PANEL-CENTER | 214 | 24-30-00 | 1004-1104 |
| E50 | SWITCH PANEL-CENTER | 214 | 24-61-00 | 1004-1104 |
| E50 | SWITCH PANEL-CENTER | 214 | 24-64-00 | 1004-1104 |
| E50 | SWITCH PANEL-CENTER | 214 | 26-20-00 | 1004-1104 |
| E50 | SWITCH PANEL-CENTER | 214 | 27-00-00 | 1004-1104 |
| E50 | SWITCH PANEL-CENTER | 214 | 27-50-00 | 1004-1104 |
| E50 | SWITCH PANEL-CENTER | 214 | 29-10-00 | 1004-1104 |
| E50 | SWITCH PANEL-CENTER | 214 | 29-30-00 | 1004-1104 |
| E50 | SWITCH PANEL-CENTER | 214 | 31-12-20 | 1004-1104 |
| E50 | SWITCH PANEL-CENTER | 214 | 31-53-00 | 1004-1104 |
| E50 | SWITCH PANEL-CENTER | 214 | 32-30-00 | 1004-1104 |
| E50 | SWITCH PANEL-CENTER | 214 | 32-43-00 | 1004-1104 |
| E50 | SWITCH PANEL-CENTER | 214 | 32-51-00 | 1004-1104 |
| E50 | SWITCH PANEL-CENTER | 214 | 32-60-00 | 1004-1104 |
| E50 | SWITCH PANEL-CENTER | 214 | 33-10-20 | 1004-1104 |
| E50 | SWITCH PANEL-CENTER | 214 | 34-27-00 | 1004-1104 |
| E50 | SWITCH PANEL-CENTER | 214 | 34-44-00 | 1004-1104 |
| E50 | SWITCH PANEL-CENTER | 214 | 45-60-00 | 1004-1104 |
| E50 | SWITCH PANEL-CENTER | 214 | 61-20-00 | 1004-1104 |
| E51 | CONTROL LEVER-FLAP | 213 | 27-50-00 | 1004-1104 |
| E51 | CONTROL LEVER-FLAP | 213 | 31-53-00 | 1004-1104 |
| E51 | CONTROL LEVER-FLAP | 213 | 33-10-20 | 1004-1104 |
| E52 | BOTTLE | 420 | 26-20-00 | 1004-1104 |
| E53 | BOTTLE | 410 | 26-20-00 | 1004-1104 |
| E54 | AURAL WARNING BOX | 231 | 22-10-00 | 1004-1104 |
| E54 | AURAL WARNING BOX | 231 | 22-11-00 | 1004-1104 |
| E54 | AURAL WARNING BOX | 231 | 23-50-00 | 1004-1104 |
| E54 | AURAL WARNING BOX | 231 | 27-00-00 | 1004-1104 |
| E54 | AURAL WARNING BOX | 231 | 27-32-00 | 1004-1104 |
| E54 | AURAL WARNING BOX | 231 | 29-10-00 | 1004-1104 |
| E54 | AURAL WARNING BOX | 231 | 29-30-00 | 1004-1104 |
| E54 | AURAL WARNING BOX | 231 | 31-51-00 | 1004-1104 |
| E54 | AURAL WARNING BOX | 231 | 32-30-00 | 1004-1104 |

| CODE | NOMENCLATURE | LOCATION | MANUAL REF | EFF. |
|---|---|---|---|---|
| E54 | AURAL WARNING BOX | 231 | 32-60-00 | 1004-1104 |
| E54 | AURAL WARNING BOX | 231 | 34-10-00 | 1004-1104 |
| E54 | AURAL WARNING BOX | 231 | 34-12-00 | 1004-1104 |
| E54 | AURAL WARNING BOX | 231 | 34-59-80 | 1004-1104 |
| E57 | CONTROL WHEEL-PILOT | 227 | 22-10-00 | 1004-1104 |
| E57 | CONTROL WHEEL-PILOT | 227 | 23-50-00 | 1004-1104 |
| E57 | CONTROL WHEEL-PILOT | 227 | 27-00-00 | 1004-1104 |
| E57 | CONTROL WHEEL-PILOT | 227 | 32-51-00 | 1004-1104 |
| E57 | CONTROL WHEEL-PILOT | 227 | 34-23-00 | 1004-1104 |
| E58 | CONTROL WHEEL-COPILOT | 228 | 22-10-00 | 1004-1104 |
| E58 | CONTROL WHEEL-COPILOT | 228 | 23-50-00 | 1004-1104 |
| E58 | CONTROL WHEEL-COPILOT | 228 | 27-00-00 | 1004-1104 |
| E58 | CONTROL WHEEL-COPILOT | 228 | 32-51-00 | 1004-1104 |
| E6 | FLASHER UNIT | 241 | 33-40-00 | 1004-1104 |
| E60 | CTRL PANEL-OXY COPILOT | 212 | 23-50-00 | 1004-1104 |
| E60 | CTRL PANEL-OXY COPILOT | 212 | 35-10-00 | 1004-1104 |
| E601 | ANTENNA-PRI COM | FUSELAGE | 23-11-20 | 1004-1104 |
| E602 | ANTENNA-VHF COM2 | 291 | 23-12-20 | 1004-1104 |
| E603 | ANTENNA-PRI-XPNDR | 231 | 34-54-00 | 1004-1104 |
| E603 | ANTENNA-PRI-XPNDR | 231 | 34-54-10 | 1004-1104 |
| E603 | ANTENNA-PRI-XPNDR | 231 | 34-54-20 | 1004-1104 |
| E603 | ANTENNA-PRI-XPNDR | 231 | 34-54-21 | 1004-1104 |
| E603 | ANTENNA-PRI-XPNDR | 231 | 34-54-30 | 1004-1104 |
| E603 | ANTENNA-PRI-XPNDR | 231 | 34-54-40 | 1004-1104 |
| E604 | ANTENNA-SEC DME | 131 | 34-57-00 | 1004-1104 |
| E604 | ANTENNA-SEC DME | 131 | 34-59-41 | 1004-1104 |
| E605 | ANTENNA-PRI DME | 121 | 34-51-00 | 1004-1104 |
| E607 | ANTENNA-ADF | 163 | 34-53-00 | 1004-1104 |
| E609 | ANTENNA-SET VOR/LOC | 320 | 34-51-00 | 1004-1104 |
| E610 | ANTENNA-MKR/BCN | 131 | 34-51-00 | 1004-1104 |
| E610 | ANTENNA-MKR/BCN | 131 | 34-58-10 | 1004-1104 |
| E611 | ANTENNA GS | 119 | 34-51-00 | 1004-1104 |
| E613 | ANTENNA-DUAL ADF | 163 | 34-55-00 | 1004-1104 |
| E617 | TRANSMITTER | 340 | 25-61-00 | 1004-1104 |
| E618 | ANTENNA-ELT SYST | 340 | 25-61-00 | 1004-1104 |
| E620 | ANTENNA-SEC-XPNDR | 231 | 34-54-00 | 1004-1104 |
| E620 | ANTENNA-SEC-XPNDR | 231 | 34-54-20 | 1004-1104 |
| E620 | ANTENNA-SEC-XPNDR | 231 | 34-54-21 | 1004-1104 |
| E621 | MIC/PHONE JACK PNL-PLT | 211 | 23-50-00 | 1004-1104 |
| E622 | MIC/PHONE JACK PNL-CPLT | 212 | 23-50-00 | 1004-1104 |
| E624 | ANTENNA COUPLER-HF | 340 | 23-13-10 | 1004-1104 |

| CODE | NOMENCLATURE | LOCATION | MANUAL REF | EFF. |
|---|---|---|---|---|
| E624 | ANTENNA COUPLER-HF | 340 | 23-13-20 | 1004-1104 |
| E625 | ANTENNA VLF/OMEGA | 153 | 34-56-00 | 1004-1104 |
| E626 | ANTENNA RCV-RAD ALT | 141 | 34-42-00 | 1004-1104 |
| E627 | ANTENNA XMT-RAD ALT | 141 | 34-42-00 | 1004-1104 |
| E629 | ANTENNA-GPS | 153 | 34-56-10 | 1004-1104 |
| E630 | AMPLIFIER-ANTENNA GPS | 242 | 34-56-10 | 1004-1104 |
| E632 | ANTENNA-OMEGA | 153 | 34-59-10 | 1004-1104 |
| E632 | ANTENNA-OMEGA | 153 | 34-59-20 | 1004-1104 |
| E632 | ANTENNA-OMEGA | 153 | 34-59-30 | 1004-1104 |
| E633 | ANTENNA-GPS | 241 | 34-59-10 | 1004-1104 |
| E633 | ANTENNA-GPS | 241 | 34-59-20 | 1004-1104 |
| E633 | ANTENNA-GPS | 241 | 34-59-30 | 1004-1104 |
| E640 | CABIN VIDEO-PNL | 231 | 23-30-00 | 1004-1104 |
| E641 | ANTENNA-GPS | 241 | 34-59-40 | 1004-1104 |
| E641 | ANTENNA-GPS | 241 | 34-59-60 | 1004-1104 |
| E642 | ANTENNA-VHF/FM HI BAND | FUSELAGE | 23-14-00 | 1004-1104 |
| E643 | RIGID WHIP ANTENNA | 340 | 25-61-00 | 1004-1104 |
| E647 | DIRECT.ANTENNA NY156 | TOP FUSLG | 34-43-00 | 1004-1104 |
| E648 | TAWS RELAY UNIT-ASSY. | TBD | 34-44-00 | 1004-1104 |
| E653 | TDR94D TOP ANTENNA | TBD | 34-54-21 | 1004-1104 |
| E7 | POWER SUPPLY | 340 | 33-40-00 | 1004-1104 |
| E8 | POWER SUPPLY | 172 | 33-40-00 | 1004-1104 |
| E86 | CONTROLLER | 214 | 30-40-00 | 1004-1104 |
| E86 | CONTROLLER | 214 | 31-12-10 | 1004-1104 |
| E87 | CONTROLLER | 214 | 30-40-00 | 1004-1104 |
| E87 | CONTROLLER | 214 | 31-12-10 | 1004-1104 |
| E88 | CONTROLLER | 214 | 30-40-00 | 1004-1104 |
| E88 | CONTROLLER | 214 | 31-12-10 | 1004-1104 |
| E89 | CONTROL PANEL-ENGINE | 213 | 30-23-00 | 1004-1104 |
| E89 | CONTROL PANEL-ENGINE | 213 | 31-13-30 | 1004-1104 |
| E89 | CONTROL PANEL-ENGINE | 213 | 33-10-20 | 1004-1104 |
| E89 | CONTROL PANEL-ENGINE | 213 | 61-20-00 | 1004-1104 |
| E89 | CONTROL PANEL-ENGINE | 213 | 61-21-00 | 1004-1104 |
| E89 | CONTROL PANEL-ENGINE | 213 | 79-20-00 | 1004-1104 |
| E90 | CONTROL BOX-PROP SYNCPH | 281 | 61-21-00 | 1004-1104 |
| E91 | DETECTOR-ICE | 122 | 30-80-00 | 1004-1104 |
| E91 | DETECTOR-ICE | 122 | 31-19-11 | 1004-1104 |
| E92 | AC CONTROL UNIT | 112 | 22-10-00 | 1004-1104 |
| E92 | AC CONTROL UNIT | 112 | 24-20-00 | 1004-1104 |
| E92 | AC CONTROL UNIT | 112 | 27-32-00 | 1004-1104 |
| E92 | AC CONTROL UNIT | 112 | 33-10-20 | 1004-1104 |

| CODE | NOMENCLATURE | LOCATION | MANUAL REF | EFF. |
|---|---|---|---|---|
| E92 | AC CONTROL UNIT | 112 | 33-21-10 | 1004-1104 |
| E92 | AC CONTROL UNIT | 112 | 33-21-20 | 1004-1104 |
| E92 | AC CONTROL UNIT | 112 | 33-21-40 | 1004-1104 |
| E92 | AC CONTROL UNIT | 112 | 33-21-50 | 1004-1104 |
| E92 | AC CONTROL UNIT | 112 | 33-21-70 | 1004-1104 |
| E92 | AC CONTROL UNIT | 112 | 33-21-80 | 1004-1104 |
| E92 | AC CONTROL UNIT | 112 | 34-21-00 | 1004-1104 |
| E92 | AC CONTROL UNIT | 112 | 34-22-00 | 1004-1104 |
| E92 | AC CONTROL UNIT | 112 | 34-23-00 | 1004-1104 |
| E92 | AC CONTROL UNIT | 112 | 34-24-00 | 1004-1104 |
| E92 | AC CONTROL UNIT | 112 | 34-28-00 | 1004-1104 |
| E92 | AC CONTROL UNIT | 112 | 34-41-00 | 1004-1104 |
| E92 | AC CONTROL UNIT | 112 | 34-51-00 | 1004-1104 |
| E92 | AC CONTROL UNIT | 112 | 34-52-00 | 1004-1104 |
| E92 | AC CONTROL UNIT | 112 | 34-56-00 | 1004-1104 |
| E92 | AC CONTROL UNIT | 112 | 34-59-10 | 1004-1104 |
| E92 | AC CONTROL UNIT | 112 | 34-59-20 | 1004-1104 |
| E92 | AC CONTROL UNIT | 112 | 34-59-30 | 1004-1104 |
| E92 | AC CONTROL UNIT | 112 | 34-59-40 | 1004-1104 |
| E92 | AC CONTROL UNIT | 112 | 34-59-60 | 1004-1104 |
| E92 | AC CONTROL UNIT | 112 | 34-59-70 | 1004-1104 |
| E92 | AC CONTROL UNIT | 112 | 34-59-80 | 1004-1104 |
| E92 | AC CONTROL UNIT | 112 | 34-59-90 | 1004-1104 |
| E93 | ELEK CONTROL BOX | 281 | 30-11-00 | 1004-1104 |
| E94 | ELEK CONTROL BOX | 282 | 30-11-00 | 1004-1104 |
| E95 | GLARESHIELD R | 226 | 26-20-00 | 1004-1104 |
| E96 | CONTROL BOX-ANTI-SKID | 162 | 32-43-00 | 1004-1104 |
| E97 | FAN MONITOR | 112 | 21-51-00 | 1004-1104 |
| E98 | MONITOR UNIT-A/I | 224 | 30-80-00 | 1004-1104 |
| E98 | MONITOR UNIT-A/I | 224 | 31-19-00 | 1004-1104 |
| E98 | MONITOR UNIT-A/I | 224 | 31-19-11 | 1004-1104 |
| E98 | MONITOR UNIT-A/I | 224 | 31-52-00 | 1004-1104 |
| E99 | CONTROL PNL-ANTI SKID | 214 | 32-43-00 | 1004-1104 |
| F1 | FUSE | SEE E92 | 34-23-00 | 1004-1104 |
| F10 | FUSE | SEE E92 | 34-24-00 | 1004-1104 |
| F11 | FUSE | SEE E92 | 34-51-00 | 1004-1104 |
| F12 | FUSE | SEE E92 | 34-21-00 | 1004-1104 |
| F12 | FUSE | SEE E92 | 34-22-00 | 1004-1104 |
| F12 | FUSE | SEE E92 | 34-28-00 | 1004-1104 |
| F13 | FUSE | SEE E92 | 34-23-00 | 1004-1104 |
| F14 | FUSE | SEE E92 | 34-23-00 | 1004-1104 |

| CODE | NOMENCLATURE | LOCATION | MANUAL REF | EFF. |
|---|---|---|---|---|
| F16 | FUSE | SEE E92 | 22-10-00 | 1004-1104 |
| F18 | FUSE | SEE E92 | 34-56-00 | 1004-1104 |
| F18 | FUSE | SEE E92 | 34-59-10 | 1004-1104 |
| F18 | FUSE | SEE E92 | 34-59-20 | 1004-1104 |
| F18 | FUSE | SEE E92 | 34-59-30 | 1004-1104 |
| F18 | FUSE | SEE E92 | 34-59-40 | 1004-1104 |
| F18 | FUSE | SEE E92 | 34-59-60 | 1004-1104 |
| F18 | FUSE | SEE E92 | 34-59-70 | 1004-1104 |
| F18 | FUSE | SEE E92 | 34-59-80 | 1004-1104 |
| F18 | FUSE | SEE E92 | 34-59-90 | 1004-1104 |
| F19 | FUSE | SEE E4 | 21-52-00 | 1004-1104 |
| F2 | FUSE | SEE E92 | 34-41-00 | 1004-1104 |
| F21 | FUSE | SEE E4 | 21-52-00 | 1004-1104 |
| F21 | FUSE | SEE E4 | 31-15-10 | 1004-1104 |
| F26 | FUSE | SEE E4 | 21-52-00 | 1004-1104 |
| F3 | FUSE | SEE E92 | 34-24-00 | 1004-1104 |
| F5 | FUSE | SEE E92 | 33-10-20 | 1004-1104 |
| F6 | FUSE | SEE E92 | 27-32-00 | 1004-1104 |
| F7 | FUSE | SEE E92 | 22-10-00 | 1004-1104 |
| F8 | FUSE | SEE E92 | 34-52-00 | 1004-1104 |
| F9 | FUSE | SEE E92 | 34-21-00 | 1004-1104 |
| F9 | FUSE | SEE E92 | 34-22-00 | 1004-1104 |
| F9 | FUSE | SEE E92 | 34-28-00 | 1004-1104 |
| FT605 | GROMMET | TBD | 34-54-21 | 1004-1104 |
| FT607 | GROMMET | TBD | 34-54-21 | 1004-1104 |
| FT608 | GROMMET | TBD | 34-54-21 | 1004-1104 |
| GY601 | VERTICAL GYRO-PRI | 116 | 34-23-00 | 1004-1104 |
| GY603 | GYRO DIRECTIONAL-PRI | 118 | 34-21-00 | 1004-1104 |
| GY603 | GYRO DIRECTIONAL-PRI | 118 | 34-22-00 | 1004-1104 |
| GY603 | GYRO DIRECTIONAL-PRI | 118 | 34-28-00 | 1004-1104 |
| GY603 | GYRO DIRECTIONAL-PRI | 118 | 34-56-00 | 1004-1104 |
| GY603 | GYRO DIRECTIONAL-PRI | 118 | 34-59-10 | 1004-1104 |
| GY603 | GYRO DIRECTIONAL-PRI | 118 | 34-59-20 | 1004-1104 |
| GY603 | GYRO DIRECTIONAL-PRI | 118 | 34-59-30 | 1004-1104 |
| GY603 | GYRO DIRECTIONAL-PRI | 118 | 34-59-40 | 1004-1104 |
| GY603 | GYRO DIRECTIONAL-PRI | 118 | 34-59-60 | 1004-1104 |
| GY603 | GYRO DIRECTIONAL-PRI | 118 | 34-59-70 | 1004-1104 |
| GY603 | GYRO DIRECTIONAL-PRI | 118 | 34-59-80 | 1004-1104 |
| GY603 | GYRO DIRECTIONAL-PRI | 118 | 34-59-90 | 1004-1104 |
| GY608 | GYRO DIRECTIONAL-SEC | 117 | 34-21-00 | 1004-1104 |
| GY608 | GYRO DIRECTIONAL-SEC | 117 | 34-22-00 | 1004-1104 |

| CODE | NOMENCLATURE | LOCATION | MANUAL REF | EFF. |
|---|---|---|---|---|
| GY608 | GYRO DIRECTIONAL-SEC | 117 | 34-28-00 | 1004-1104 |
| GY608 | GYRO DIRECTIONAL-SEC | 117 | 34-43-00 | 1004-1104 |
| GY608 | GYRO DIRECTIONAL-SEC | 117 | 34-44-00 | 1004-1104 |
| GY610 | VERTICAL GYRO-SEC | 117 | 34-24-00 | 1004-1104 |
| GY611 | GYRO HORIZON | 223 | 24-64-00 | 1004-1104 |
| GY611 | GYRO HORIZON | 223 | 34-27-00 | 1004-1104 |
| HR1 | PITOT TUBE | 117 | 30-30-00 | 1004-1104 |
| HR10 | HEATER | 143 | 21-10-00 | 1004-1104 |
| HR10 | HEATER | 143 | 21-20-00 | 1004-1104 |
| HR10 | HEATER | 143 | 21-40-00 | 1004-1104 |
| HR13 | WINDSHIELD L | 221 | 30-40-00 | 1004-1104 |
| HR14 | WINDSHIELD R | 222 | 30-40-00 | 1004-1104 |
| HR2 | PITOT TUBE | 118 | 30-30-00 | 1004-1104 |
| HR3 | STATIC PORT | 231 | 30-30-00 | 1004-1104 |
| HR4 | STATIC PORT | 232 | 30-30-00 | 1004-1104 |
| HR5 | STATIC PORT | 231 | 30-30-00 | 1004-1104 |
| HR6 | STATIC PORT | 232 | 30-30-00 | 1004-1104 |
| HR8 | STATIC PORT | 232 | 30-31-00 | 1004-1104 |
| HT601 | HEADSET-PILOT | 211 | 23-50-00 | 1004-1104 |
| HT602 | HEADSET-COPILOT | 212 | 23-50-00 | 1004-1104 |
| IC1 | INTEGRATED CIRCUIT | 214 | 32-51-00 | 1004-1104 |
| IC2 | INTEGRATED CIRCUIT | 214 | 32-51-00 | 1004-1104 |
| IC3 | INTEGRATED CIRCUIT | 224 | 30-80-00 | 1004-1104 |
| IC3 | INTEGRATED CIRCUIT | 224 | 31-19-11 | 1004-1104 |
| IC4 | INTEGRATED CIRCUIT | 224 | 30-80-00 | 1004-1104 |
| IC4 | INTEGRATED CIRCUIT | 224 | 31-19-11 | 1004-1104 |
| IC609 | INTEGRATED CIRCUIT | SEE PCB33 | 31-14-40 | 1004-1104 |
| IC609 | INTEGRATED CIRCUIT | SEE PCB33 | 34-59-80 | 1004-1104 |
| ID605 | INDICATOR-MACH SPEED | 223 | 33-10-10 | 1004-1104 |
| ID605 | INDICATOR-MACH SPEED | 223 | 34-12-00 | 1004-1104 |
| ID606 | INDICATOR-MACH SPEED | 224 | 33-10-10 | 1004-1104 |
| ID607 | INDICATOR-VERT SPEED | 223 | 33-10-10 | 1004-1104 |
| ID607 | INDICATOR-VERT SPEED | 223 | 34-12-00 | 1004-1104 |
| ID608 | INDICATOR-RATE OF CLIMB CPLT | 224 | 33-10-10 | 1004-1104 |
| ID609 | INDICATOR-ENCODER ALTM | 223 | 33-10-10 | 1004-1104 |
| ID609 | INDICATOR-ENCODER ALTM | 223 | 34-10-00 | 1004-1104 |
| ID609 | INDICATOR-ENCODER ALTM | 223 | 34-12-00 | 1004-1104 |
| ID609 | INDICATOR-ENCODER ALTM | 223 | 34-13-00 | 1004-1104 |
| ID609 | INDICATOR-ENCODER ALTM | 223 | 34-43-00 | 1004-1104 |
| ID609 | INDICATOR-ENCODER ALTM | 223 | 34-54-40 | 1004-1104 |
| ID611 | INDICATOR-RMI | 223 | 33-10-10 | 1004-1104 |

| CODE | NOMENCLATURE | LOCATION | MANUAL REF | EFF. |
|---|---|---|---|---|
| ID611 | INDICATOR-RMI | 223 | 34-21-00 | 1004-1104 |
| ID611 | INDICATOR-RMI | 223 | 34-22-00 | 1004-1104 |
| ID611 | INDICATOR-RMI | 223 | 34-28-00 | 1004-1104 |
| ID611 | INDICATOR-RMI | 223 | 34-43-00 | 1004-1104 |
| ID611 | INDICATOR-RMI | 223 | 34-44-00 | 1004-1104 |
| ID611 | INDICATOR-RMI | 223 | 34-55-00 | 1004-1104 |
| ID618 | INDICATOR-ALTIMETER CPLT | 224 | 34-11-00 | 1004-1104 |
| ID621 | PRESELECTOR ALERTER | 223 | 33-10-10 | 1004-1104 |
| ID621 | PRESELECTOR ALERTER | 223 | 33-10-20 | 1004-1104 |
| ID621 | PRESELECTOR ALERTER | 223 | 34-10-00 | 1004-1104 |
| ID621 | PRESELECTOR ALERTER | 223 | 34-12-00 | 1004-1104 |
| ID622 | INDICATOR-RMI | 214 | 33-10-10 | 1004-1104 |
| ID622 | INDICATOR-RMI | 214 | 34-21-00 | 1004-1104 |
| ID622 | INDICATOR-RMI | 214 | 34-22-00 | 1004-1104 |
| ID622 | INDICATOR-RMI | 214 | 34-55-00 | 1004-1104 |
| ID624 | DISPLAY ELEK FLIGHT | 224 | 34-24-00 | 1004-1104 |
| ID626 | INDICATOR-ATTITUDE | 224 | 33-10-10 | 1004-1104 |
| ID626 | INDICATOR-ATTITUDE | 224 | 34-24-00 | 1004-1104 |
| ID627 | NAVIGATION DISPLAY | 223 | 34-23-00 | 1004-1104 |
| ID628 | MULTIFUNCTION DISPLAY | 224 | 33-10-10 | 1004-1104 |
| ID628 | MULTIFUNCTION DISPLAY | 224 | 34-23-00 | 1004-1104 |
| ID629 | FLIGHT DISPLAY-PRI | 223 | 33-10-10 | 1004-1104 |
| ID629 | FLIGHT DISPLAY-PRI | 223 | 34-23-00 | 1004-1104 |
| ID630 | INDICATOR-RAD ALTM | 224 | 33-10-10 | 1004-1104 |
| ID630 | INDICATOR-RAD ALTM | 224 | 33-10-20 | 1004-1104 |
| ID630 | INDICATOR-RAD ALTM | 224 | 34-42-00 | 1004-1104 |
| ID630 | INDICATOR-RAD ALTM | 224 | 34-43-00 | 1004-1104 |
| ID632 | INDICATOR-ENCODER ALTM | 224 | 33-10-10 | 1004-1104 |
| ID632 | INDICATOR-ENCODER ALTM | 224 | 34-13-00 | 1004-1104 |
| K1 | RELAY-PWR RECEPTACLE | SEE E4 | 21-52-00 | 1004-1104 |
| K1 | RELAY-PWR RECEPTACLE | SEE E4 | 24-30-00 | 1004-1104 |
| K1 | RELAY-PWR RECEPTACLE | SEE E4 | 24-31-00 | 1004-1104 |
| K1 | RELAY-PWR RECEPTACLE | SEE E4 | 24-61-00 | 1004-1104 |
| K1 | RELAY-PWR RECEPTACLE | SEE E4 | 31-15-10 | 1004-1104 |
| K10 | RELAY-START ENG R | SEE E4 | 24-30-00 | 1004-1104 |
| K10 | RELAY-START ENG R | SEE E4 | 31-15-10 | 1004-1104 |
| K100 | RELAY-CURRENT SENSOR | 232 | 30-32-00 | 1004-1104 |
| K101 | RELAY-CURRENT SENSOR | 231 | 30-32-00 | 1004-1104 |
| K102 | RELAY-OVV SENSOR | SEE E4 | 24-31-00 | 1004-1104 |
| K103 | REMOTE CTRL C/B | SEE E4 | 24-63-00 | 1004-1104 |
| K104 | REMOTE CTRL C/B | SEE E4 | 24-63-00 | 1004-1104 |

| CODE | NOMENCLATURE | LOCATION | MANUAL REF | EFF. |
|---|---|---|---|---|
| K105 | REMOTE CTRL C/B | SEE E4 | 24-63-00 | 1004-1104 |
| K106 | RELAY | SEE E4 | 21-41-00 | 1004-1104 |
| K106 | RELAY | SEE E4 | 31-15-10 | 1004-1104 |
| K11 | RELAY-START ENG L | SEE E4 | 24-30-00 | 1004-1104 |
| K11 | RELAY-START ENG L | SEE E4 | 31-15-10 | 1004-1104 |
| K1600 | RELAY-CABIN LIGHTS | 231 | 33-12-00 | 1004-1104 |
| K1600 | RELAY-CABIN LIGHTS | 231 | 33-12-10 | 1004-1104 |
| K1600 | RELAY-CABIN LIGHTS | 231 | 33-12-40 | 1004-1104 |
| K1600 | RELAY-CABIN LIGHTS | 231 | 33-12-50 | 1004-1104 |
| K1600 | RELAY-CABIN LIGHTS | 231 | 33-12-60 | 1004-1104 |
| K1601 | RELAY-ENTRY LIGHT | 211 | 33-13-00 | 1004-1104 |
| K1602 | RELAY | TBD | 33-20-10 | 1004-1104 |
| K1602 | RELAY | TBD | 33-20-30 | 1004-1104 |
| K1602 | RELAY | TBD | 33-21-50 | 1004-1104 |
| K1602 | RELAY | TBD | 33-22-50 | 1004-1104 |
| K18 | RELAY | SEE E30 | 24-61-00 | 1004-1104 |
| K18 | RELAY | SEE E30 | 31-12-60 | 1004-1104 |
| K18 | RELAY | SEE E30 | 34-59-80 | 1004-1104 |
| K18 | RELAY | SEE E30 | 34-59-90 | 1004-1104 |
| K19 | RELAY | 213 | 28-20-00 | 1004-1104 |
| K19 | RELAY | 213 | 31-13-10 | 1004-1104 |
| K2 | RELAY-BATTERY | SEE E4 | 24-30-00 | 1004-1104 |
| K2 | RELAY-BATTERY | SEE E4 | 24-61-00 | 1004-1104 |
| K2 | RELAY-BATTERY | SEE E4 | 31-15-10 | 1004-1104 |
| K20 | RELAY | 213 | 28-20-00 | 1004-1104 |
| K20 | RELAY | 213 | 31-13-10 | 1004-1104 |
| K23 | REMOTE CTRL C/B | SEE E4 | 24-61-00 | 1004-1104 |
| K23 | REMOTE CTRL C/B | SEE E4 | 30-40-00 | 1004-1104 |
| K23 | REMOTE CTRL C/B | SEE E4 | 31-15-10 | 1004-1104 |
| K24 | REMOTE CTRL C/B | SEE E4 | 24-61-00 | 1004-1104 |
| K24 | REMOTE CTRL C/B | SEE E4 | 30-40-00 | 1004-1104 |
| K24 | REMOTE CTRL C/B | SEE E4 | 31-15-10 | 1004-1104 |
| K25 | REMOTE CTRL C/B | SEE E4 | 24-61-00 | 1004-1104 |
| K25 | REMOTE CTRL C/B | SEE E4 | 30-12-00 | 1004-1104 |
| K25 | REMOTE CTRL C/B | SEE E4 | 31-15-10 | 1004-1104 |
| K26 | REMOTE CTRL C/B | SEE E4 | 24-61-00 | 1004-1104 |
| K26 | REMOTE CTRL C/B | SEE E4 | 30-12-00 | 1004-1104 |
| K26 | REMOTE CTRL C/B | SEE E4 | 31-15-10 | 1004-1104 |
| K27 | RELAY-FWD WING A/I L | 113 | 30-12-00 | 1004-1104 |
| K28 | RELAY-FWD WING A/I R | 114 | 30-12-00 | 1004-1104 |
| K3 | RELAY-BUS DISCONNECT | SEE E4 | 24-30-00 | 1004-1104 |

| CODE | NOMENCLATURE | LOCATION | MANUAL REF | EFF. |
|---|---|---|---|---|
| K3 | RELAY-BUS DISCONNECT | SEE E4 | 24-61-00 | 1004-1104 |
| K3 | RELAY-BUS DISCONNECT | SEE E4 | 31-15-10 | 1004-1104 |
| K30 | RELAY | 214 | 29-10-00 | 1004-1104 |
| K30 | RELAY | 214 | 29-30-00 | 1004-1104 |
| K30 | RELAY | 214 | 32-30-00 | 1004-1104 |
| K30 | RELAY | 214 | 32-60-00 | 1004-1104 |
| K31 | REMOTE CTRL C/B | SEE E4 | 24-61-00 | 1004-1104 |
| K31 | REMOTE CTRL C/B | SEE E4 | 29-10-00 | 1004-1104 |
| K31 | REMOTE CTRL C/B | SEE E4 | 29-30-00 | 1004-1104 |
| K31 | REMOTE CTRL C/B | SEE E4 | 31-15-10 | 1004-1104 |
| K31 | REMOTE CTRL C/B | SEE E4 | 32-30-00 | 1004-1104 |
| K31 | REMOTE CTRL C/B | SEE E4 | 32-60-00 | 1004-1104 |
| K34 | RELAY-DEFOG ZONE 4 | 232 REAR | 30-40-00 | 1004-1104 |
| K35 | RELAY-DEFOG ZONE 5 | 232 REAR | 30-40-00 | 1004-1104 |
| K38 | RELAY-FIRE DETECTOR | SEE E4 | 26-10-00 | 1004-1104 |
| K38 | RELAY-FIRE DETECTOR | SEE E4 | 31-15-10 | 1004-1104 |
| K39 | RELAY-FLT COMP | SEE E4 | 21-10-00 | 1004-1104 |
| K39 | RELAY-FLT COMP | SEE E4 | 21-20-00 | 1004-1104 |
| K39 | RELAY-FLT COMP | SEE E4 | 21-40-00 | 1004-1104 |
| K39 | RELAY-FLT COMP | SEE E4 | 31-15-10 | 1004-1104 |
| K4 | RELAY-BUS DISCONNECT | SEE E4 | 24-30-00 | 1004-1104 |
| K4 | RELAY-BUS DISCONNECT | SEE E4 | 24-61-00 | 1004-1104 |
| K4 | RELAY-BUS DISCONNECT | SEE E4 | 31-15-10 | 1004-1104 |
| K42 | RELAY | 213 | 28-20-00 | 1004-1104 |
| K42 | RELAY | 213 | 31-13-11 | 1004-1104 |
| K47 | RELAY-A/P | 213 | 27-00-00 | 1004-1104 |
| K47 | RELAY-A/P | 213 | 31-13-20 | 1004-1104 |
| K48 | RELAY-A/P | 213 | 27-00-00 | 1004-1104 |
| K48 | RELAY-A/P | 213 | 31-13-20 | 1004-1104 |
| K5 | RELAY-BUS DISCONNECT | SEE E4 | 21-52-00 | 1004-1104 |
| K5 | RELAY-BUS DISCONNECT | SEE E4 | 24-30-00 | 1004-1104 |
| K5 | RELAY-BUS DISCONNECT | SEE E4 | 24-61-00 | 1004-1104 |
| K5 | RELAY-BUS DISCONNECT | SEE E4 | 31-15-10 | 1004-1104 |
| K53 | RELAY-AU/FTR ARM L | 281 | 31-15-10 | 1004-1104 |
| K53 | RELAY-AU/FTR ARM L | 281 | 61-20-00 | 1004-1104 |
| K54 | RELAY-AU/FTR ARM R | 281 | 31-15-10 | 1004-1104 |
| K54 | RELAY-AU/FTR ARM R | 281 | 61-20-00 | 1004-1104 |
| K55 | RELAY-AU/FTR CTRL L | 281 | 31-15-10 | 1004-1104 |
| K55 | RELAY-AU/FTR CTRL L | 281 | 61-20-00 | 1004-1104 |
| K56 | RELAY-AU/FTR CTRL R | 281 | 31-15-10 | 1004-1104 |
| K56 | RELAY-AU/FTR CTRL R | 281 | 61-20-00 | 1004-1104 |

| CODE | NOMENCLATURE | LOCATION | MANUAL REF | EFF. |
|---|---|---|---|---|
| K57 | REMOTE CTRL C/B | SEE E4 | 24-61-00 | 1004-1104 |
| K57 | REMOTE CTRL C/B | SEE E4 | 30-40-00 | 1004-1104 |
| K57 | REMOTE CTRL C/B | SEE E4 | 31-15-10 | 1004-1104 |
| K58 | REMOTE CTRL C/B | SEE E4 | 24-61-00 | 1004-1104 |
| K58 | REMOTE CTRL C/B | SEE E4 | 30-40-00 | 1004-1104 |
| K58 | REMOTE CTRL C/B | SEE E4 | 31-15-10 | 1004-1104 |
| K59 | RELAY-DEICE ZONE 2 | 232 REAR | 30-40-00 | 1004-1104 |
| K6 | RELAY-MAIN CTCTR R | SEE E4 | 21-52-00 | 1004-1104 |
| K6 | RELAY-MAIN CTCTR R | SEE E4 | 24-30-00 | 1004-1104 |
| K6 | RELAY-MAIN CTCTR R | SEE E4 | 24-61-00 | 1004-1104 |
| K6 | RELAY-MAIN CTCTR R | SEE E4 | 31-15-10 | 1004-1104 |
| K60 | RELAY-DEFOG ZONE 3 | 232 REAR | 30-40-00 | 1004-1104 |
| K600 | RELAY-HF PWR | 281 | 23-13-10 | 1004-1104 |
| K600 | RELAY-HF PWR | 281 | 23-13-20 | 1004-1104 |
| K601 | RELAY | 111 | 31-14-16 | 1004-1104 |
| K601 | RELAY | 111 | 34-55-00 | 1004-1104 |
| K602 | RELAY | 111 | 31-14-10 | 1004-1104 |
| K602 | RELAY | 111 | 31-14-40 | 1004-1104 |
| K602 | RELAY | 111 | 34-24-00 | 1004-1104 |
| K604 | RELAY | SEE AE754 | 22-11-00 | 1004-1104 |
| K604 | RELAY | SEE AE754 | 31-14-10 | 1004-1104 |
| K604 | RELAY | SEE AE754 | 31-14-20 | 1004-1104 |
| K604 | RELAY | SEE AE754 | 31-14-30 | 1004-1104 |
| K604 | RELAY | SEE AE754 | 31-14-40 | 1004-1104 |
| K604 | RELAY | SEE AE754 | 34-24-00 | 1004-1104 |
| K604 | RELAY | SEE AE754 | 34-52-00 | 1004-1104 |
| K61 | RELAY-DEICE ZONE 1 | 231 | 30-40-00 | 1004-1104 |
| K62 | RELAY-DEFOG ZONE 6 | 231 | 30-40-00 | 1004-1104 |
| K620 | RELAY | SEE AE754 | 22-10-00 | 1004-1104 |
| K620 | RELAY | SEE AE754 | 22-11-00 | 1004-1104 |
| K620 | RELAY | SEE AE754 | 31-14-10 | 1004-1104 |
| K620 | RELAY | SEE AE754 | 31-14-20 | 1004-1104 |
| K620 | RELAY | SEE AE754 | 31-14-30 | 1004-1104 |
| K620 | RELAY | SEE AE754 | 31-14-40 | 1004-1104 |
| K620 | RELAY | SEE AE754 | 34-24-00 | 1004-1104 |
| K621 | RELAY | SEE AE754 | 22-11-00 | 1004-1104 |
| K621 | RELAY | SEE AE754 | 31-14-20 | 1004-1104 |
| K621 | RELAY | SEE AE754 | 31-14-30 | 1004-1104 |
| K621 | RELAY | SEE AE754 | 31-14-40 | 1004-1104 |
| K622 | RELAY-TEST INHIBIT | SEE AE754 | 22-10-00 | 1004-1104 |
| K622 | RELAY-TEST INHIBIT | SEE AE754 | 22-11-00 | 1004-1104 |

| CODE | NOMENCLATURE | LOCATION | MANUAL REF | EFF. |
|---|---|---|---|---|
| K622 | RELAY-TEST INHIBIT | SEE AE754 | 31-14-10 | 1004-1104 |
| K622 | RELAY-TEST INHIBIT | SEE AE754 | 31-14-20 | 1004-1104 |
| K622 | RELAY-TEST INHIBIT | SEE AE754 | 31-14-30 | 1004-1104 |
| K622 | RELAY-TEST INHIBIT | SEE AE754 | 31-14-40 | 1004-1104 |
| K622 | RELAY-TEST INHIBIT | SEE AE754 | 34-23-00 | 1004-1104 |
| K622 | RELAY-TEST INHIBIT | SEE AE754 | 34-42-00 | 1004-1104 |
| K622 | RELAY-TEST INHIBIT | SEE AE754 | 34-51-00 | 1004-1104 |
| K623 | RELAY-STBY HORYZON | SEE E50 | 24-64-00 | 1004-1104 |
| K623 | RELAY-STBY HORYZON | SEE E50 | 31-12-20 | 1004-1104 |
| K623 | RELAY-STBY HORYZON | SEE E50 | 34-27-00 | 1004-1104 |
| K624 | RELAY-FMS COUPLER | SEE E111 | 34-10-00 | 1004-1104 |
| K624 | RELAY-FMS COUPLER | SEE E111 | 34-10-10 | 1004-1104 |
| K624 | RELAY-FMS COUPLER | SEE E111 | 34-56-00 | 1004-1104 |
| K624 | RELAY-FMS COUPLER | SEE E111 | 34-59-10 | 1004-1104 |
| K624 | RELAY-FMS COUPLER | SEE E111 | 34-59-20 | 1004-1104 |
| K624 | RELAY-FMS COUPLER | SEE E111 | 34-59-30 | 1004-1104 |
| K624 | RELAY-FMS COUPLER | SEE E111 | 34-59-40 | 1004-1104 |
| K624 | RELAY-FMS COUPLER | SEE E111 | 34-59-60 | 1004-1104 |
| K624 | RELAY-FMS COUPLER | SEE E111 | 34-59-70 | 1004-1104 |
| K624 | RELAY-FMS COUPLER | SEE E111 | 34-59-80 | 1004-1104 |
| K624 | RELAY-FMS COUPLER | SEE E111 | 34-59-90 | 1004-1104 |
| K625 | RELAY-LRN/OMEGA | 111 | 34-56-00 | 1004-1104 |
| K626 | RELAY-LRN/OMEGA | 111 | 34-56-00 | 1004-1104 |
| K628 | RELAY | 111 | 31-14-14 | 1004-1104 |
| K628 | RELAY | 111 | 31-14-18 | 1004-1104 |
| K628 | RELAY | 111 | 31-14-30 | 1004-1104 |
| K628 | RELAY | 111 | 31-14-40 | 1004-1104 |
| K628 | RELAY | 111 | 34-59-10 | 1004-1104 |
| K628 | RELAY | 111 | 34-59-20 | 1004-1104 |
| K628 | RELAY | 111 | 34-59-30 | 1004-1104 |
| K628 | RELAY | 111 | 34-59-40 | 1004-1104 |
| K628 | RELAY | 111 | 34-59-60 | 1004-1104 |
| K628 | RELAY | 111 | 34-59-70 | 1004-1104 |
| K628 | RELAY | 111 | 34-59-80 | 1004-1104 |
| K628 | RELAY | 111 | 34-59-90 | 1004-1104 |
| K629 | RELAY | 111 | 31-14-14 | 1004-1104 |
| K629 | RELAY | 111 | 34-54-20 | 1004-1104 |
| K629 | RELAY | 111 | 34-59-10 | 1004-1104 |
| K629 | RELAY | 111 | 34-59-30 | 1004-1104 |
| K630 | RELAY | 111 | 31-14-19 | 1004-1104 |
| K630 | RELAY | 111 | 31-14-30 | 1004-1104 |

| CODE | NOMENCLATURE | LOCATION | MANUAL REF | EFF. |
|---|---|---|---|---|
| K630 | RELAY | 111 | 31-14-40 | 1004-1104 |
| K630 | RELAY | 111 | 34-54-30 | 1004-1104 |
| K630 | RELAY | 111 | 34-54-40 | 1004-1104 |
| K632 | RELAY | SEE PC20 | 22-11-00 | 1004-1104 |
| K633 | RELAY | SEE PC20 | 22-11-00 | 1004-1104 |
| K634 | RELAY | 111 | 31-14-14 | 1004-1104 |
| K634 | RELAY | 111 | 31-14-18 | 1004-1104 |
| K634 | RELAY | 111 | 31-14-30 | 1004-1104 |
| K634 | RELAY | 111 | 34-59-10 | 1004-1104 |
| K634 | RELAY | 111 | 34-59-20 | 1004-1104 |
| K634 | RELAY | 111 | 34-59-30 | 1004-1104 |
| K634 | RELAY | 111 | 34-59-40 | 1004-1104 |
| K634 | RELAY | 111 | 34-59-60 | 1004-1104 |
| K634 | RELAY | 111 | 34-59-70 | 1004-1104 |
| K634 | RELAY | 111 | 34-59-90 | 1004-1104 |
| K635 | RELAY | 111 | 31-14-18 | 1004-1104 |
| K635 | RELAY | 111 | 34-59-20 | 1004-1104 |
| K637 | RELAY | 111 | 31-14-18 | 1004-1104 |
| K637 | RELAY | 111 | 31-14-30 | 1004-1104 |
| K637 | RELAY | 111 | 31-14-40 | 1004-1104 |
| K639 | RELAY | 111 | 31-14-18 | 1004-1104 |
| K639 | RELAY | 111 | 31-14-30 | 1004-1104 |
| K639 | RELAY | 111 | 31-14-40 | 1004-1104 |
| K64 | RELAY | 214 | 30-40-00 | 1004-1104 |
| K64 | RELAY | 214 | 31-12-11 | 1004-1104 |
| K640 | RELAY-VIDEO SYSTEM PWR | 231 | 23-30-00 | 1004-1104 |
| K647 | RELAY | SEE E111 | 34-10-10 | 1004-1104 |
| K648 | RELAY | SEE E111 | 34-10-10 | 1004-1104 |
| K649 | RELAY | SEE E111 | 34-10-10 | 1004-1104 |
| K65 | RELAY | 214 | 30-40-00 | 1004-1104 |
| K65 | RELAY | 214 | 31-12-11 | 1004-1104 |
| K650 | RELAY | 213 | 34-43-00 | 1004-1104 |
| K651 | RELAY | TBD | 34-44-00 | 1004-1104 |
| K652 | RELAY | TBD | 31-14-40 | 1004-1104 |
| K652 | RELAY | TBD | 34-59-80 | 1004-1104 |
| K7 | RELAY-MAIN CTCTR L | SEE E4 | 21-52-00 | 1004-1104 |
| K7 | RELAY-MAIN CTCTR L | SEE E4 | 24-30-00 | 1004-1104 |
| K7 | RELAY-MAIN CTCTR L | SEE E4 | 24-61-00 | 1004-1104 |
| K7 | RELAY-MAIN CTCTR L | SEE E4 | 31-15-10 | 1004-1104 |
| K75 | RELAY-LT LANDING L | 111 | 33-40-00 | 1004-1104 |
| K76 | RELAY-LT LANDING R | 112 | 33-40-00 | 1004-1104 |

| CODE | NOMENCLATURE | LOCATION | MANUAL REF | EFF. |
|---|---|---|---|---|
| K77 | RELAY-LT TAXI | 111 | 33-40-00 | 1004-1104 |
| K78 | RELAY | 214 | 29-10-00 | 1004-1104 |
| K78 | RELAY | 214 | 29-30-00 | 1004-1104 |
| K78 | RELAY | 214 | 32-30-00 | 1004-1104 |
| K78 | RELAY | 214 | 32-60-00 | 1004-1104 |
| K79 | RELAY | 214 | 32-51-00 | 1004-1104 |
| K8 | RELAY-START ENG R | SEE E4 | 24-30-00 | 1004-1104 |
| K8 | RELAY-START ENG R | SEE E4 | 31-15-10 | 1004-1104 |
| K80 | RELAY | 214 | 32-51-00 | 1004-1104 |
| K81 | RELAY-PITCH TRIM PRI | SEE E4 | 27-00-00 | 1004-1104 |
| K81 | RELAY-PITCH TRIM PRI | SEE E4 | 31-15-10 | 1004-1104 |
| K82 | RELAY-TRIM CMND PLT | 213 | 27-00-00 | 1004-1104 |
| K82 | RELAY-TRIM CMND PLT | 213 | 31-13-20 | 1004-1104 |
| K83 | RELAY | 214 | 30-40-00 | 1004-1104 |
| K83 | RELAY | 214 | 31-12-11 | 1004-1104 |
| K84 | RELAY | SEE PCB4 | 22-11-00 | 1004-1104 |
| K84 | RELAY | SEE PCB4 | 31-12-41 | 1004-1104 |
| K85 | RELAY-AU/FTR ANN | 213 | 31-13-30 | 1004-1104 |
| K85 | RELAY-AU/FTR ANN | 213 | 31-13-31 | 1004-1104 |
| K85 | RELAY-AU/FTR ANN | 213 | 61-20-00 | 1004-1104 |
| K86 | REMOTE CTRL C/B | SEE E4 | 24-61-00 | 1004-1104 |
| K86 | REMOTE CTRL C/B | SEE E4 | 27-50-00 | 1004-1104 |
| K86 | REMOTE CTRL C/B | SEE E4 | 31-15-10 | 1004-1104 |
| K87 | REMOTE CTRL C/B | SEE E4 | 24-30-00 | 1004-1104 |
| K87 | REMOTE CTRL C/B | SEE E4 | 24-61-00 | 1004-1104 |
| K87 | REMOTE CTRL C/B | SEE E4 | 31-15-10 | 1004-1104 |
| K88 | REMOTE CTRL C/B | SEE E4 | 24-30-00 | 1004-1104 |
| K88 | REMOTE CTRL C/B | SEE E4 | 24-61-00 | 1004-1104 |
| K88 | REMOTE CTRL C/B | SEE E4 | 31-15-10 | 1004-1104 |
| K89 | RELAY-ANTI-SKID | 214 | 32-43-00 | 1004-1104 |
| K9 | RELAY-START ENG L | SEE E4 | 24-30-00 | 1004-1104 |
| K9 | RELAY-START ENG L | SEE E4 | 31-15-10 | 1004-1104 |
| K90 | RELAY | 224 | 30-80-00 | 1004-1104 |
| K90 | RELAY | 224 | 31-19-11 | 1004-1104 |
| K92 | RELAY | SEE PCB17 | 21-52-00 | 1004-1104 |
| K92 | RELAY | SEE PCB17 | 31-16-10 | 1004-1104 |
| K93 | RELAY | SEE PCB17 | 21-52-00 | 1004-1104 |
| K93 | RELAY | SEE PCB17 | 31-16-10 | 1004-1104 |
| K94 | RELAY | SEE PCB17 | 21-52-00 | 1004-1104 |
| K94 | RELAY | SEE PCB17 | 31-16-10 | 1004-1104 |
| K96 | RELAY-AVIONICS FAN | 111 | 21-51-00 | 1004-1104 |

| CODE | NOMENCLATURE | LOCATION | MANUAL REF | EFF. |
|---|---|---|---|---|
| K97 | RELAY | TBD | 31-52-00 | 1004-1104 |
| K98 | RELAY | TBD | 31-52-00 | 1004-1104 |
| L1 | VALVE-ENG INLET DEICE L | 410 | 30-22-00 | 1004-1104 |
| L13 | VALVE C/F-FUEL SYST | 521 | 28-20-00 | 1004-1104 |
| L14 | VALVE-PROP OVSP R | 440 | 61-41-00 | 1004-1104 |
| L15 | VALVE-PROP OVSP L | 430 | 61-41-00 | 1004-1104 |
| L16 | VALVE-BYPASS | 710 | 32-51-00 | 1004-1104 |
| L17 | VALVE-SERVO | 710 | 32-51-00 | 1004-1104 |
| L18 | VALVE S/O-FUEL SYST R | 621 | 28-20-00 | 1004-1104 |
| L19 | VALVE S/O-FUEL SYST L | 521 | 28-20-00 | 1004-1104 |
| L2 | VALVE-ENG INLET DEICE R | 420 | 30-22-00 | 1004-1104 |
| L20 | VALVE-PRESS REGULATING | 291 | 21-10-00 | 1004-1104 |
| L20 | VALVE-PRESS REGULATING | 291 | 21-20-00 | 1004-1104 |
| L20 | VALVE-PRESS REGULATING | 291 | 21-40-00 | 1004-1104 |
| L21 | VALVE-SWITCH-OXY PILOT | 211 | 35-10-00 | 1004-1104 |
| L22 | VALVE-REFUELING TEST | 262 | 28-13-00 | 1004-1104 |
| L23 | VALVE-DUMP L | 410 | 61-20-00 | 1004-1104 |
| L24 | VALVE-DUMP R | 420 | 61-20-00 | 1004-1104 |
| L25 | VALVE-PROP GOVERNOR L | 430 | 61-21-00 | 1004-1104 |
| L26 | VALVE-PROP GOVERNOR R | 440 | 61-21-00 | 1004-1104 |
| L27 | VALVE-OIL COOL L | 410 | 30-23-00 | 1004-1104 |
| L27 | VALVE-OIL COOL L | 410 | 79-20-00 | 1004-1104 |
| L28 | VALVE-OIL COOL R | 420 | 30-23-00 | 1004-1104 |
| L28 | VALVE-OIL COOL R | 420 | 79-20-00 | 1004-1104 |
| L3 | VALVE-DISTRIBUTION AIR L | 261 | 21-10-00 | 1004-1104 |
| L3 | VALVE-DISTRIBUTION AIR L | 261 | 21-20-00 | 1004-1104 |
| L3 | VALVE-DISTRIBUTION AIR L | 261 | 21-40-00 | 1004-1104 |
| L30 | VALVE-ENG OIL COOL A/I R | 420 | 30-23-00 | 1004-1104 |
| L30 | VALVE-ENG OIL COOL A/I R | 420 | 79-20-00 | 1004-1104 |
| L31 | VALVE-ENG OIL COOL A/I L | 410 | 30-23-00 | 1004-1104 |
| L31 | VALVE-ENG OIL COOL A/I L | 410 | 79-20-00 | 1004-1104 |
| L32 | VALVE-BYPASS AIR R | 232 | 21-10-00 | 1004-1104 |
| L32 | VALVE-BYPASS AIR R | 232 | 21-20-00 | 1004-1104 |
| L32 | VALVE-BYPASS AIR R | 232 | 21-40-00 | 1004-1104 |
| L32 | VALVE-BYPASS AIR R | 232 | 32-43-00 | 1004-1104 |
| L33 | VALVE-BYPASS AIR L | 231 | 21-10-00 | 1004-1104 |
| L33 | VALVE-BYPASS AIR L | 231 | 21-20-00 | 1004-1104 |
| L33 | VALVE-BYPASS AIR L | 231 | 21-40-00 | 1004-1104 |
| L4 | VALVE-DISTRIBUTION AIR R | 262 | 21-10-00 | 1004-1104 |
| L4 | VALVE-DISTRIBUTION AIR R | 262 | 21-20-00 | 1004-1104 |
| L4 | VALVE-DISTRIBUTION AIR R | 262 | 21-40-00 | 1004-1104 |

| CODE | NOMENCLATURE | LOCATION | MANUAL REF | EFF. |
|---|---|---|---|---|
| L5 | VALVE-S/O-BLEED AIR L | 410 | 21-10-00 | 1004-1104 |
| L5 | VALVE-S/O-BLEED AIR L | 410 | 21-20-00 | 1004-1104 |
| L5 | VALVE-S/O-BLEED AIR L | 410 | 21-40-00 | 1004-1104 |
| L6 | VALVE-S/O-BLEED AIR R | 420 | 21-10-00 | 1004-1104 |
| L6 | VALVE-S/O-BLEED AIR R | 420 | 21-20-00 | 1004-1104 |
| L6 | VALVE-S/O-BLEED AIR R | 420 | 21-40-00 | 1004-1104 |
| L7 | VALVE-EMERGENCY BLEED AIR | 271 | 21-10-00 | 1004-1104 |
| L7 | VALVE-EMERGENCY BLEED AIR | 271 | 21-20-00 | 1004-1104 |
| L7 | VALVE-EMERGENCY BLEED AIR | 271 | 21-40-00 | 1004-1104 |
| L8 | VALVE-SOLENOID | 232 | 21-31-00 | 1004-1104 |
| LS1800 | SPEAKER | 242 | 23-51-00 | 1004-1104 |
| LS1801 | SPEAKER | 241 | 23-51-00 | 1004-1104 |
| LS1802 | SPEAKER | 242 | 23-51-00 | 1004-1104 |
| LS600 | SPEAKER-FLT COMP R | 222 | 23-50-00 | 1004-1104 |
| LS601 | SPEAKER-FLT COMP L | 221 | 23-50-00 | 1004-1104 |
| M1 | INDICATOR-MFDI | 223 | 22-11-00 | 1004-1104 |
| M1 | INDICATOR-MFDI | 223 | 24-30-00 | 1004-1104 |
| M1 | INDICATOR-MFDI | 223 | 31-60-00 | 1004-1104 |
| M1 | INDICATOR-MFDI | 223 | 33-10-10 | 1004-1104 |
| M1 | INDICATOR-MFDI | 223 | 33-10-20 | 1004-1104 |
| M10 | INDICATOR-FUEL QTY R | 213 | 28-41-00 | 1004-1104 |
| M10 | INDICATOR-FUEL QTY R | 213 | 33-10-10 | 1004-1104 |
| M11 | INDICATOR-ITT L | 225 | 33-10-10 | 1004-1104 |
| M11 | INDICATOR-ITT L | 225 | 77-20-00 | 1004-1104 |
| M12 | INDICATOR-ITT R | 225 | 33-10-10 | 1004-1104 |
| M12 | INDICATOR-ITT R | 225 | 77-20-00 | 1004-1104 |
| M13 | INDICATOR-TORQUE L | 225 | 33-10-10 | 1004-1104 |
| M13 | INDICATOR-TORQUE L | 225 | 77-11-00 | 1004-1104 |
| M14 | INDICATOR-TORQUE R | 225 | 33-10-10 | 1004-1104 |
| M14 | INDICATOR-TORQUE R | 225 | 77-11-00 | 1004-1104 |
| M15 | INDICATOR-PROPELLER RPM L | 225 | 33-10-10 | 1004-1104 |
| M15 | INDICATOR-PROPELLER RPM L | 225 | 61-41-00 | 1004-1104 |
| M16 | INDICATOR-PROPELLER RPM R | 225 | 33-10-10 | 1004-1104 |
| M16 | INDICATOR-PROPELLER RPM R | 225 | 61-41-00 | 1004-1104 |
| M17 | INDICATOR-NG L | 225 | 33-10-10 | 1004-1104 |
| M17 | INDICATOR-NG L | 225 | 77-10-00 | 1004-1104 |
| M18 | INDICATOR-NG R | 225 | 33-10-10 | 1004-1104 |
| M18 | INDICATOR-NG R | 225 | 77-10-00 | 1004-1104 |
| M21 | INDICATOR-POSITION FLAP | 214 | 27-50-00 | 1004-1104 |
| M21 | INDICATOR-POSITION FLAP | 214 | 33-10-10 | 1004-1104 |
| M22 | INDICATOR-HYD PRESS | 214 | 29-10-00 | 1004-1104 |

| CODE | NOMENCLATURE | LOCATION | MANUAL REF | EFF. |
|---|---|---|---|---|
| M22 | INDICATOR-HYD PRESS | 214 | 29-30-00 | 1004-1104 |
| M22 | INDICATOR-HYD PRESS | 214 | 32-30-00 | 1004-1104 |
| M22 | INDICATOR-HYD PRESS | 214 | 32-60-00 | 1004-1104 |
| M22 | INDICATOR-HYD PRESS | 214 | 33-10-10 | 1004-1104 |
| M23 | INDICATOR-OXY PRESS | 211 | 33-10-10 | 1004-1104 |
| M24 | INDICATOR-ALTIMETER | 214 | 31-12-30 | 1004-1104 |
| M25 | INDICATOR-RATE OF CLIMB | 214 | 31-12-30 | 1004-1104 |
| M3 | MAGNETIC COMPASS | 221 | 33-10-10 | 1004-1104 |
| M5 | INDICATOR-FUEL FLOW L | 225 | 33-10-10 | 1004-1104 |
| M5 | INDICATOR-FUEL FLOW L | 225 | 73-30-00 | 1004-1104 |
| M5 | INDICATOR-FUEL FLOW L | 225 | 73-31-00 | 1004-1104 |
| M52 | INDICATOR-TRIM POS | 213 | 27-00-00 | 1004-1104 |
| M52 | INDICATOR-TRIM POS | 213 | 33-10-10 | 1004-1104 |
| M6 | INDICATOR-FUEL FLOW R | 225 | 33-10-10 | 1004-1104 |
| M6 | INDICATOR-FUEL FLOW R | 225 | 73-30-00 | 1004-1104 |
| M6 | INDICATOR-FUEL FLOW R | 225 | 73-31-00 | 1004-1104 |
| M601 | DIGITAL CLOCK | 223 | 31-20-00 | 1004-1104 |
| M601 | DIGITAL CLOCK | 223 | 31-21-00 | 1004-1104 |
| M601 | DIGITAL CLOCK | 223 | 33-10-10 | 1004-1104 |
| M602 | INDICATOR-TURN/SLIP | 223 | 34-25-00 | 1004-1104 |
| M604 | DIGITAL CLOCK-SEC | 224 | 31-21-00 | 1004-1104 |
| M7 | INDICATOR-OIL TEMP/PRESS L | 225 | 33-10-10 | 1004-1104 |
| M7 | INDICATOR-OIL TEMP/PRESS L | 225 | 79-31-00 | 1004-1104 |
| M8 | INDICATOR-OIL TEMP/PRESS R | 225 | 33-10-10 | 1004-1104 |
| M8 | INDICATOR-OIL TEMP/PRESS R | 225 | 79-31-00 | 1004-1104 |
| M9 | INDICATOR-FUEL QTY L | 213 | 28-41-00 | 1004-1104 |
| M9 | INDICATOR-FUEL QTY L | 213 | 33-10-10 | 1004-1104 |
| MC1 | COMPRESSOR/CONDENSER | 282 | 21-52-00 | 1004-1104 |
| MG1 | STARTER/GENERATOR L | 410 | 24-30-00 | 1004-1104 |
| MG1 | STARTER/GENERATOR L | 410 | 24-61-00 | 1004-1104 |
| MG2 | STARTER/GENERATOR R | 420 | 24-30-00 | 1004-1104 |
| MG2 | STARTER/GENERATOR R | 420 | 24-61-00 | 1004-1104 |
| MK601 | MIC-HAND-PILOT | 227 | 23-50-00 | 1004-1104 |
| MK602 | MIC-HAND-COPILOT | 228 | 23-50-00 | 1004-1104 |
| MT10 | BULB-OIL TEMP R | 420 | 79-31-00 | 1004-1104 |
| MT11 | BULB-OIL TEMP L | 410 | 79-31-00 | 1004-1104 |
| MT12 | TRANSDUCER-OIL PRESS R | 420 | 79-31-00 | 1004-1104 |
| MT13 | TRANSDUCER-OIL PRESS L | 410 | 79-31-00 | 1004-1104 |
| MT16 | PROBE | 632 | 28-41-00 | 1004-1104 |
| MT17 | PROBE | 532 | 28-41-00 | 1004-1104 |
| MT18 | PROBE | 622 | 28-41-00 | 1004-1104 |

| CODE | NOMENCLATURE | LOCATION | MANUAL REF | EFF. |
|---|---|---|---|---|
| MT19 | PROBE | 522 | 28-41-00 | 1004-1104 |
| MT20 | PROBE | 622 | 28-41-00 | 1004-1104 |
| MT21 | PROBE | 522 | 28-41-00 | 1004-1104 |
| MT22 | PROBE | 632 | 28-41-00 | 1004-1104 |
| MT23 | PROBE | 532 | 28-41-00 | 1004-1104 |
| MT24 | PROBE | 252 | 28-41-00 | 1004-1104 |
| MT25 | PROBE | 251 | 28-41-00 | 1004-1104 |
| MT26 | PROBE | 262 | 28-41-00 | 1004-1104 |
| MT27 | PROBE | 261 | 28-41-00 | 1004-1104 |
| MT28 | TRANSMITTER-FUEL FLOW R | 420 | 73-30-00 | 1004-1104 |
| MT29 | TRANSMITTER-FUEL FLOW L | 410 | 73-30-00 | 1004-1104 |
| MT37 | TRANSDUCER-TORQUE L | 410 | 77-11-00 | 1004-1104 |
| MT38 | TRANSDUCER-TORQUE R | 420 | 77-11-00 | 1004-1104 |
| MT41 | TACHOMETER GENERATOR-L ENG | 430 | 61-41-00 | 1004-1104 |
| MT42 | TACHOMETER GENERATOR-R ENG | 440 | 61-41-00 | 1004-1104 |
| MT45 | TACHOMETER GEN-NG L | 410 | 77-10-00 | 1004-1104 |
| MT46 | TACHOMETER GEN-NG R | 420 | 77-10-00 | 1004-1104 |
| MT47 | TRANSMITTER AOA | 231 | 27-32-00 | 1004-1104 |
| MT47 | TRANSMITTER AOA | 231 | 30-30-00 | 1004-1104 |
| MT54 | TRANSDUCER-PHASE P/UP R | 440 | 61-21-00 | 1004-1104 |
| MT55 | TRANSDUCER-PHASE P/UP L | 430 | 61-21-00 | 1004-1104 |
| MT58 | TRANSDUCER-WHELL R | 720 | 32-43-00 | 1004-1104 |
| MT59 | TRANSDUCER-WHELL L | 730 | 32-43-00 | 1004-1104 |
| MT601 | FLUX DETECTOR-PRI | 310 | 34-21-00 | 1004-1104 |
| MT601 | FLUX DETECTOR-PRI | 310 | 34-22-00 | 1004-1104 |
| MT601 | FLUX DETECTOR-PRI | 310 | 34-28-00 | 1004-1104 |
| MT640 | FLUX DETECTOR-SEC | 310 | 34-21-00 | 1004-1104 |
| MT640 | FLUX DETECTOR-SEC | 310 | 34-22-00 | 1004-1104 |
| MT640 | FLUX DETECTOR-SEC | 310 | 34-28-00 | 1004-1104 |
| MT8 | HEATER | 661 | 30-12-00 | 1004-1104 |
| MT9 | HEATER | 561 | 30-12-00 | 1004-1104 |
| PCB1 | PC BOARD | SEE E4 | 24-30-00 | 1004-1104 |
| PCB1 | PC BOARD | SEE E4 | 31-15-10 | 1004-1104 |
| PCB10 | PC BOARD | SEE E50 | 21-10-00 | 1004-1104 |
| PCB10 | PC BOARD | SEE E50 | 21-20-00 | 1004-1104 |
| PCB10 | PC BOARD | SEE E50 | 21-40-00 | 1004-1104 |
| PCB10 | PC BOARD | SEE E50 | 21-41-00 | 1004-1104 |
| PCB10 | PC BOARD | SEE E50 | 31-12-20 | 1004-1104 |
| PCB10 | PC BOARD | SEE E50 | 32-43-00 | 1004-1104 |
| PCB10 | PC BOARD | SEE E50 | 34-27-00 | 1004-1104 |
| PCB11 | PC BOARD | 213 | 31-13-20 | 1004-1104 |

| CODE | NOMENCLATURE | LOCATION | MANUAL REF | EFF. |
|---|---|---|---|---|
| PCB12 | PC BOARD | SEE E25 | 21-31-00 | 1004-1104 |
| PCB12 | PC BOARD | SEE E25 | 27-32-00 | 1004-1104 |
| PCB12 | PC BOARD | SEE E25 | 30-12-00 | 1004-1104 |
| PCB12 | PC BOARD | SEE E25 | 30-40-00 | 1004-1104 |
| PCB12 | PC BOARD | SEE E25 | 31-12-10 | 1004-1104 |
| PCB12 | PC BOARD | SEE E25 | 34-23-00 | 1004-1104 |
| PCB13 | PC BOARD | 213 | 30-23-00 | 1004-1104 |
| PCB13 | PC BOARD | 213 | 31-13-30 | 1004-1104 |
| PCB13 | PC BOARD | 213 | 61-20-00 | 1004-1104 |
| PCB13 | PC BOARD | 213 | 79-20-00 | 1004-1104 |
| PCB14 | PC BOARD | 111 | 31-14-16 | 1004-1104 |
| PCB14 | PC BOARD | 111 | 31-14-17 | 1004-1104 |
| PCB14 | PC BOARD | 111 | 34-55-00 | 1004-1104 |
| PCB15 | PC BOARD | SEE E101 | 30-80-00 | 1004-1104 |
| PCB15 | PC BOARD | SEE E101 | 31-19-00 | 1004-1104 |
| PCB15 | PC BOARD | SEE E101 | 31-19-11 | 1004-1104 |
| PCB16 | PC BOARD | SEE E101 | 31-14-14 | 1004-1104 |
| PCB16 | PC BOARD | SEE E101 | 31-52-00 | 1004-1104 |
| PCB16 | PC BOARD | SEE E101 | 34-59-10 | 1004-1104 |
| PCB16 | PC BOARD | SEE E101 | 34-59-30 | 1004-1104 |
| PCB16 | PC BOARD | SEE E101 | 34-59-40 | 1004-1104 |
| PCB16 | PC BOARD | SEE E101 | 34-59-60 | 1004-1104 |
| PCB16 | PC BOARD | SEE E101 | 34-59-90 | 1004-1104 |
| PCB17 | PC BOARD | SEE E105 | 21-52-00 | 1004-1104 |
| PCB2 | PC BOARD | 213 | 28-20-00 | 1004-1104 |
| PCB2 | PC BOARD | 213 | 31-13-10 | 1004-1104 |
| PCB20 | PC BOARD | 112 | 22-11-00 | 1004-1104 |
| PCB21 | PC BOARD | 111 | 31-14-20 | 1004-1104 |
| PCB22 | PC BOARD | 111 | 31-14-14 | 1004-1104 |
| PCB22 | PC BOARD | 111 | 34-59-10 | 1004-1104 |
| PCB22 | PC BOARD | 111 | 34-59-30 | 1004-1104 |
| PCB22 | PC BOARD | 111 | 34-59-40 | 1004-1104 |
| PCB22 | PC BOARD | 111 | 34-59-60 | 1004-1104 |
| PCB22 | PC BOARD | 111 | 34-59-70 | 1004-1104 |
| PCB22 | PC BOARD | 111 | 34-59-90 | 1004-1104 |
| PCB24 | PC BOARD | 111 | 31-14-18 | 1004-1104 |
| PCB24 | PC BOARD | 111 | 34-59-20 | 1004-1104 |
| PCB28 | PC BOARD | 111 | 22-11-00 | 1004-1104 |
| PCB28 | PC BOARD | 111 | 31-14-30 | 1004-1104 |
| PCB28 | PC BOARD | 111 | 34-59-70 | 1004-1104 |
| PCB3 | PC BOARD | 213 | 27-00-00 | 1004-1104 |

| CODE | NOMENCLATURE | LOCATION | MANUAL REF | EFF. |
|---|---|---|---|---|
| PCB3 | PC BOARD | 213 | 31-13-20 | 1004-1104 |
| PCB3 | PC BOARD | 213 | 32-51-00 | 1004-1104 |
| PCB30 | PC BOARD | SEE E4 | 29-10-00 | 1004-1104 |
| PCB30 | PC BOARD | SEE E4 | 29-30-00 | 1004-1104 |
| PCB30 | PC BOARD | SEE E4 | 31-15-10 | 1004-1104 |
| PCB30 | PC BOARD | SEE E4 | 32-30-00 | 1004-1104 |
| PCB30 | PC BOARD | SEE E4 | 32-60-00 | 1004-1104 |
| PCB31 | PC BOARD | 213 | 34-43-00 | 1004-1104 |
| PCB32 | PC BOARD | TBD | 34-44-00 | 1004-1104 |
| PCB33 | PC BOARD | 232 VANITY | 31-14-40 | 1004-1104 |
| PCB33 | PC BOARD | 232 VANITY | 34-59-80 | 1004-1104 |
| PCB4 | PC BOARD | SEE E34 | 22-11-00 | 1004-1104 |
| PCB4 | PC BOARD | SEE E34 | 31-12-40 | 1004-1104 |
| PCB6 | PC BOARD | SEE E50 | 21-10-00 | 1004-1104 |
| PCB6 | PC BOARD | SEE E50 | 21-20-00 | 1004-1104 |
| PCB6 | PC BOARD | SEE E50 | 21-40-00 | 1004-1104 |
| PCB6 | PC BOARD | SEE E50 | 24-64-00 | 1004-1104 |
| PCB6 | PC BOARD | SEE E50 | 27-00-00 | 1004-1104 |
| PCB6 | PC BOARD | SEE E50 | 27-50-00 | 1004-1104 |
| PCB6 | PC BOARD | SEE E50 | 29-10-00 | 1004-1104 |
| PCB6 | PC BOARD | SEE E50 | 29-30-00 | 1004-1104 |
| PCB6 | PC BOARD | SEE E50 | 31-12-20 | 1004-1104 |
| PCB6 | PC BOARD | SEE E50 | 32-30-00 | 1004-1104 |
| PCB6 | PC BOARD | SEE E50 | 32-51-00 | 1004-1104 |
| PCB6 | PC BOARD | SEE E50 | 32-60-00 | 1004-1104 |
| PCB6 | PC BOARD | SEE E50 | 34-27-00 | 1004-1104 |
| PCB6 | PC BOARD | SEE E50 | 61-20-00 | 1004-1104 |
| PCB7 | PC BOARD | 111 | 31-14-10 | 1004-1104 |
| PCB7 | PC BOARD | 111 | 31-14-18 | 1004-1104 |
| PCB7 | PC BOARD | 111 | 31-14-30 | 1004-1104 |
| PCB7 | PC BOARD | 111 | 31-14-40 | 1004-1104 |
| PCB7 | PC BOARD | 111 | 34-12-00 | 1004-1104 |
| PCB7 | PC BOARD | 111 | 34-23-00 | 1004-1104 |
| PCB7 | PC BOARD | 111 | 34-24-00 | 1004-1104 |
| PCB7 | PC BOARD | 111 | 34-51-00 | 1004-1104 |
| PCB7 | PC BOARD | 111 | 34-52-00 | 1004-1104 |
| PCB7 | PC BOARD | 111 | 34-59-10 | 1004-1104 |
| PCB7 | PC BOARD | 111 | 34-59-20 | 1004-1104 |
| PCB7 | PC BOARD | 111 | 34-59-30 | 1004-1104 |
| PCB7 | PC BOARD | 111 | 34-59-40 | 1004-1104 |
| PCB7 | PC BOARD | 111 | 34-59-60 | 1004-1104 |

| CODE | NOMENCLATURE | LOCATION | MANUAL REF | EFF. |
|---|---|---|---|---|
| PCB7 | PC BOARD | 111 | 34-59-70 | 1004-1104 |
| PCB7 | PC BOARD | 111 | 34-59-80 | 1004-1104 |
| PCB7 | PC BOARD | 111 | 34-59-90 | 1004-1104 |
| PCB8 | PC BOARD | 214 | 31-12-10 | 1004-1104 |
| PS1 | INVERTER-PRIMARY | 117 | 24-20-00 | 1004-1104 |
| PS2 | INVERTER-SECONDARY | 118 | 24-20-00 | 1004-1104 |
| Q10 | TRANSISTOR | 214 | 32-51-00 | 1004-1104 |
| Q11 | TRANSISTOR | 214 | 32-51-00 | 1004-1104 |
| Q12 | TRANSISTOR | 213 | 31-13-31 | 1004-1104 |
| Q12 | TRANSISTOR | 213 | 61-20-00 | 1004-1104 |
| Q13 | TRANSISTOR | 213 | 31-13-31 | 1004-1104 |
| Q13 | TRANSISTOR | 213 | 61-20-00 | 1004-1104 |
| Q14 | TRANSISTOR | 224 | 30-80-00 | 1004-1104 |
| Q14 | TRANSISTOR | 224 | 31-19-11 | 1004-1104 |
| Q15 | TRANSISTOR | 224 | 30-80-00 | 1004-1104 |
| Q15 | TRANSISTOR | 224 | 31-16-10 | 1004-1104 |
| Q15 | TRANSISTOR | 224 | 31-19-11 | 1004-1104 |
| Q16 | TRANSISTOR | 281 | 21-52-00 | 1004-1104 |
| Q17 | TRANSISTOR | 281 | 21-52-00 | 1004-1104 |
| Q17 | TRANSISTOR | 281 | 31-16-10 | 1004-1104 |
| Q2 | TRANSISTOR | 213 | 27-00-00 | 1004-1104 |
| Q2 | TRANSISTOR | 213 | 31-13-21 | 1004-1104 |
| Q4 | TRANSISTOR | 214 | 32-51-00 | 1004-1104 |
| Q5 | TRANSISTOR | 214 | 29-10-00 | 1004-1104 |
| Q5 | TRANSISTOR | 214 | 29-30-00 | 1004-1104 |
| Q5 | TRANSISTOR | 214 | 32-30-00 | 1004-1104 |
| Q5 | TRANSISTOR | 214 | 32-60-00 | 1004-1104 |
| Q600 | TRANSISTOR | 111 | 31-14-17 | 1004-1104 |
| Q600 | TRANSISTOR | 111 | 34-55-00 | 1004-1104 |
| Q8 | TRANSISTOR | 213 | 27-00-00 | 1004-1104 |
| Q8 | TRANSISTOR | 213 | 31-13-21 | 1004-1104 |
| Q9 | TRANSISTOR | 213 | 27-00-00 | 1004-1104 |
| Q9 | TRANSISTOR | 213 | 31-13-21 | 1004-1104 |
| R1 | SHUNT | 410 | 24-30-00 | 1004-1104 |
| R10 | RHEOSTAT | 211 | 31-12-40 | 1004-1104 |
| R100 | RESISTOR | 213 | 31-13-31 | 1004-1104 |
| R100 | RESISTOR | 213 | 61-20-00 | 1004-1104 |
| R101 | RESISTOR | 211 | 31-12-40 | 1004-1104 |
| R102 | RESISTOR | 211 | 31-12-40 | 1004-1104 |
| R103 | RESISTOR | 224 | 30-80-00 | 1004-1104 |
| R103 | RESISTOR | 224 | 31-19-11 | 1004-1104 |

| CODE | NOMENCLATURE | LOCATION | MANUAL REF | EFF. |
|---|---|---|---|---|
| R104 | RESISTOR | 224 | 30-80-00 | 1004-1104 |
| R104 | RESISTOR | 224 | 31-19-11 | 1004-1104 |
| R105 | RESISTOR | 224 | 30-80-00 | 1004-1104 |
| R105 | RESISTOR | 224 | 31-19-11 | 1004-1104 |
| R106 | RESISTOR | 224 | 30-80-00 | 1004-1104 |
| R106 | RESISTOR | 224 | 31-19-11 | 1004-1104 |
| R107 | RESISTOR | 224 | 30-80-00 | 1004-1104 |
| R107 | RESISTOR | 224 | 31-19-11 | 1004-1104 |
| R108 | RESISTOR | 224 | 30-80-00 | 1004-1104 |
| R108 | RESISTOR | 224 | 31-19-11 | 1004-1104 |
| R109 | RESISTOR | 224 | 30-80-00 | 1004-1104 |
| R109 | RESISTOR | 224 | 31-19-11 | 1004-1104 |
| R110 | RESISTOR | 224 | 30-80-00 | 1004-1104 |
| R110 | RESISTOR | 224 | 31-19-11 | 1004-1104 |
| R111 | RESISTOR | 224 | 30-80-00 | 1004-1104 |
| R111 | RESISTOR | 224 | 31-19-11 | 1004-1104 |
| R112 | RESISTOR | 224 | 30-80-00 | 1004-1104 |
| R112 | RESISTOR | 224 | 31-19-11 | 1004-1104 |
| R113 | RESISTOR | 224 | 30-80-00 | 1004-1104 |
| R113 | RESISTOR | 224 | 31-19-11 | 1004-1104 |
| R114 | RESISTOR | 224 | 30-80-00 | 1004-1104 |
| R114 | RESISTOR | 224 | 31-19-11 | 1004-1104 |
| R115 | RESISTOR | 224 | 30-80-00 | 1004-1104 |
| R115 | RESISTOR | 224 | 31-19-11 | 1004-1104 |
| R116 | RESISTOR | 224 | 30-80-00 | 1004-1104 |
| R116 | RESISTOR | 224 | 31-19-11 | 1004-1104 |
| R117 | RESISTOR | FS 1130 | 21-60-00 | 1004-1104 |
| R118 | RESISTOR | SEE E101 | 31-52-00 | 1004-1104 |
| R119 | RESISTOR | SEE PCB17 | 21-52-00 | 1004-1104 |
| R119 | RESISTOR | SEE PCB17 | 31-16-10 | 1004-1104 |
| R120 | RESISTOR | SEE PCB17 | 21-52-00 | 1004-1104 |
| R120 | RESISTOR | SEE PCB17 | 31-16-10 | 1004-1104 |
| R121 | RESISTOR | SEE PCB17 | 21-52-00 | 1004-1104 |
| R121 | RESISTOR | SEE PCB17 | 31-16-10 | 1004-1104 |
| R122 | POTENTIOMETER | SEE E50 | 21-41-00 | 1004-1104 |
| R122 | POTENTIOMETER | SEE E50 | 31-12-20 | 1004-1104 |
| R123 | RESISTOR | SEE PCB30 | 29-10-00 | 1004-1104 |
| R123 | RESISTOR | SEE PCB30 | 29-30-00 | 1004-1104 |
| R123 | RESISTOR | SEE PCB30 | 32-30-00 | 1004-1104 |
| R123 | RESISTOR | SEE PCB30 | 32-60-00 | 1004-1104 |
| R14 | RESISTOR | 213 | 27-00-00 | 1004-1104 |

| CODE | NOMENCLATURE | LOCATION | MANUAL REF | EFF. |
|---|---|---|---|---|
| R14 | RESISTOR | 213 | 31-13-21 | 1004-1104 |
| R15 | RESISTOR | 213 | 27-00-00 | 1004-1104 |
| R15 | RESISTOR | 213 | 31-13-21 | 1004-1104 |
| R17 | RHEOSTAT | 211 | 31-12-40 | 1004-1104 |
| R2 | SHUNT | 420 | 24-30-00 | 1004-1104 |
| R22 | RESISTOR | 214 | 32-51-00 | 1004-1104 |
| R23 | RESISTOR | 214 | 32-51-00 | 1004-1104 |
| R24 | RESISTOR | 214 | 32-51-00 | 1004-1104 |
| R25 | RESISTOR | 214 | 29-10-00 | 1004-1104 |
| R25 | RESISTOR | 214 | 29-30-00 | 1004-1104 |
| R25 | RESISTOR | 214 | 32-30-00 | 1004-1104 |
| R25 | RESISTOR | 214 | 32-60-00 | 1004-1104 |
| R26 | RESISTOR | 214 | 29-10-00 | 1004-1104 |
| R26 | RESISTOR | 214 | 29-30-00 | 1004-1104 |
| R26 | RESISTOR | 214 | 32-30-00 | 1004-1104 |
| R26 | RESISTOR | 214 | 32-60-00 | 1004-1104 |
| R27 | RESISTOR | 214 | 29-10-00 | 1004-1104 |
| R27 | RESISTOR | 214 | 29-30-00 | 1004-1104 |
| R27 | RESISTOR | 214 | 32-30-00 | 1004-1104 |
| R27 | RESISTOR | 214 | 32-60-00 | 1004-1104 |
| R28 | RESISTOR | 214 | 29-10-00 | 1004-1104 |
| R28 | RESISTOR | 214 | 29-30-00 | 1004-1104 |
| R28 | RESISTOR | 214 | 32-30-00 | 1004-1104 |
| R28 | RESISTOR | 214 | 32-60-00 | 1004-1104 |
| R3 | SELECTOR-ECS | 214 | 21-60-00 | 1004-1104 |
| R3 | SELECTOR-ECS | SEE E50 | 21-60-00 | 1004-1104 |
| R3 | SELECTOR-ECS | 214 | 31-12-20 | 1004-1104 |
| R3 | SELECTOR-ECS | SEE E50 | 31-12-20 | 1004-1104 |
| R33 | RESISTOR | 213 | 27-00-00 | 1004-1104 |
| R33 | RESISTOR | 213 | 31-13-21 | 1004-1104 |
| R34 | RESISTOR | 213 | 27-00-00 | 1004-1104 |
| R34 | RESISTOR | 213 | 31-13-21 | 1004-1104 |
| R35 | RESISTOR | 213 | 27-00-00 | 1004-1104 |
| R35 | RESISTOR | 213 | 31-13-21 | 1004-1104 |
| R36 | RESISTOR | 213 | 27-00-00 | 1004-1104 |
| R36 | RESISTOR | 213 | 31-13-21 | 1004-1104 |
| R37 | RESISTOR | 213 | 27-00-00 | 1004-1104 |
| R37 | RESISTOR | 213 | 31-13-21 | 1004-1104 |
| R38 | RESISTOR | 213 | 27-00-00 | 1004-1104 |
| R38 | RESISTOR | 213 | 31-13-21 | 1004-1104 |
| R5 | CURRENT LIMITER | 111 | 33-40-00 | 1004-1104 |

| CODE | NOMENCLATURE | LOCATION | MANUAL REF | EFF. |
|---|---|---|---|---|
| R6 | CURRENT LIMITER | 112 | 33-40-00 | 1004-1104 |
| R600 | RESISTOR | 111 | 31-14-11 | 1004-1104 |
| R600 | RESISTOR | 111 | 31-14-40 | 1004-1104 |
| R600 | RESISTOR | 111 | 34-24-00 | 1004-1104 |
| R601 | RESISTOR | 111 | 31-14-17 | 1004-1104 |
| R601 | RESISTOR | 111 | 34-55-00 | 1004-1104 |
| R602 | RESISTOR | 111 | 31-14-11 | 1004-1104 |
| R602 | RESISTOR | 111 | 31-14-40 | 1004-1104 |
| R602 | RESISTOR | 111 | 34-24-00 | 1004-1104 |
| R603 | RESISTOR | 111 | 31-14-17 | 1004-1104 |
| R603 | RESISTOR | 111 | 34-55-00 | 1004-1104 |
| R608 | RESISTOR | 111 | 31-14-11 | 1004-1104 |
| R608 | RESISTOR | 111 | 31-14-40 | 1004-1104 |
| R608 | RESISTOR | 111 | 34-52-00 | 1004-1104 |
| R609 | POTENTIOMETER | 223 | 31-17-10 | 1004-1104 |
| R609 | POTENTIOMETER | 223 | 31-17-20 | 1004-1104 |
| R609 | POTENTIOMETER | 223 | 34-23-00 | 1004-1104 |
| R610 | RESISTOR | 111 | 31-14-11 | 1004-1104 |
| R610 | RESISTOR | 111 | 31-14-40 | 1004-1104 |
| R610 | RESISTOR | 111 | 34-52-00 | 1004-1104 |
| R611 | POTENTIOMETER | 223 | 31-17-10 | 1004-1104 |
| R611 | POTENTIOMETER | 223 | 31-17-20 | 1004-1104 |
| R611 | POTENTIOMETER | 223 | 34-23-00 | 1004-1104 |
| R612 | RESISTOR | 111 | 31-14-11 | 1004-1104 |
| R612 | RESISTOR | 111 | 31-14-40 | 1004-1104 |
| R612 | RESISTOR | 111 | 34-52-00 | 1004-1104 |
| R613 | RESISTOR | 111 | 22-10-00 | 1004-1104 |
| R613 | RESISTOR | 111 | 31-14-11 | 1004-1104 |
| R613 | RESISTOR | 111 | 31-14-40 | 1004-1104 |
| R618 | RESISTOR | 231 | 24-64-00 | 1004-1104 |
| R618 | RESISTOR | 231 | 34-27-00 | 1004-1104 |
| R674 | RESISTOR | SEE PC21 | 22-11-00 | 1004-1104 |
| R674 | RESISTOR | SEE PC21 | 31-14-20 | 1004-1104 |
| R674 | RESISTOR | SEE PC21 | 31-14-30 | 1004-1104 |
| R675 | RESISTOR | SEE PC21 | 22-11-00 | 1004-1104 |
| R675 | RESISTOR | SEE PC21 | 31-14-20 | 1004-1104 |
| R675 | RESISTOR | SEE PC21 | 31-14-30 | 1004-1104 |
| R677 | RESISTOR | SEE E111 | 34-10-00 | 1004-1104 |
| R677 | RESISTOR | SEE E111 | 34-10-10 | 1004-1104 |
| R678 | RESISTOR | SEE PCB33 | 34-59-80 | 1004-1104 |
| R69 | POTENTIOMETER | 211 | 31-12-40 | 1004-1104 |

| CODE | NOMENCLATURE | LOCATION | MANUAL REF | EFF. |
|---|---|---|---|---|
| R7 | CURRENT LIMITER | 111 | 33-40-00 | 1004-1104 |
| R77 | RESISTOR | 213 | 27-00-00 | 1004-1104 |
| R77 | RESISTOR | 213 | 31-13-21 | 1004-1104 |
| R87 | RESISTOR | 214 | 32-51-00 | 1004-1104 |
| R88 | RESISTOR | 214 | 32-51-00 | 1004-1104 |
| R89 | RESISTOR | 214 | 32-51-00 | 1004-1104 |
| R9 | POTENTIOMETER | 211 | 31-12-40 | 1004-1104 |
| R90 | RESISTOR | 214 | 32-51-00 | 1004-1104 |
| R91 | RESISTOR | 214 | 32-51-00 | 1004-1104 |
| R92 | RESISTOR | 214 | 32-51-00 | 1004-1104 |
| R93 | RESISTOR | 214 | 32-51-00 | 1004-1104 |
| R94 | RESISTOR | 214 | 32-51-00 | 1004-1104 |
| R97 | RESISTOR | 213 | 31-13-31 | 1004-1104 |
| R97 | RESISTOR | 213 | 61-20-00 | 1004-1104 |
| R98 | RESISTOR | 213 | 31-13-31 | 1004-1104 |
| R98 | RESISTOR | 213 | 61-20-00 | 1004-1104 |
| R99 | RESISTOR | 213 | 31-13-31 | 1004-1104 |
| R99 | RESISTOR | 213 | 61-20-00 | 1004-1104 |
| RE601 | RECEIVER-VHF NAV (PRI) | 113 | 34-51-00 | 1004-1104 |
| RE601 | RECEIVER-VHF NAV (PRI) | 113 | 34-56-00 | 1004-1104 |
| RE601 | RECEIVER-VHF NAV (PRI) | 113 | 34-58-10 | 1004-1104 |
| RE601 | RECEIVER-VHF NAV (PRI) | 113 | 34-59-10 | 1004-1104 |
| RE601 | RECEIVER-VHF NAV (PRI) | 113 | 34-59-20 | 1004-1104 |
| RE601 | RECEIVER-VHF NAV (PRI) | 113 | 34-59-30 | 1004-1104 |
| RE601 | RECEIVER-VHF NAV (PRI) | 113 | 34-59-40 | 1004-1104 |
| RE601 | RECEIVER-VHF NAV (PRI) | 113 | 34-59-60 | 1004-1104 |
| RE601 | RECEIVER-VHF NAV (PRI) | 113 | 34-59-70 | 1004-1104 |
| RE601 | RECEIVER-VHF NAV (PRI) | 113 | 34-59-80 | 1004-1104 |
| RE601 | RECEIVER-VHF NAV (PRI) | 113 | 34-59-90 | 1004-1104 |
| RE602 | RECEIVER-VHF NAV (SEC) | 114 | 34-52-00 | 1004-1104 |
| RE602 | RECEIVER-VHF NAV (SEC) | 114 | 34-56-00 | 1004-1104 |
| RE602 | RECEIVER-VHF NAV (SEC) | 114 | 34-58-10 | 1004-1104 |
| RE602 | RECEIVER-VHF NAV (SEC) | 114 | 34-59-10 | 1004-1104 |
| RE602 | RECEIVER-VHF NAV (SEC) | 114 | 34-59-20 | 1004-1104 |
| RE602 | RECEIVER-VHF NAV (SEC) | 114 | 34-59-30 | 1004-1104 |
| RE603 | RECEIVER-ADF | 112 | 23-14-00 | 1004-1104 |
| RE603 | RECEIVER-ADF | 112 | 34-53-00 | 1004-1104 |
| RE603 | RECEIVER-ADF | 112 | 34-55-00 | 1004-1104 |
| RE605 | RECEIVER-ADF | 114 | 34-55-00 | 1004-1104 |
| RP601 | REMOTE CTRL-INFRARED | 231 & 241 | 23-30-00 | 1004-1104 |
| RP601 | REMOTE CTRL-INFRARED | 241 | 23-30-00 | 1004-1104 |

| CODE | NOMENCLATURE | LOCATION | MANUAL REF | EFF. |
|---|---|---|---|---|
| RP602 | REMOTE CTRL-INFRARED | 241 / 242 | 23-30-00 | 1004-1104 |
| RP602 | REMOTE CTRL-INFRARED | 242 | 23-30-00 | 1004-1104 |
| RT1 | SENSOR-TEMP | 172 | 21-60-00 | 1004-1104 |
| RT14 | SENSING ELEMENT | 631 | 30-11-00 | 1004-1104 |
| RT15 | SENSING ELEMENT | 531 | 30-11-00 | 1004-1104 |
| RT16 | SENSING ELEMENT | 631 | 30-11-00 | 1004-1104 |
| RT17 | SENSING ELEMENT | 531 | 30-11-00 | 1004-1104 |
| RT18 | SENSING ELEMENT | 631 | 30-11-00 | 1004-1104 |
| RT19 | SENSING ELEMENT | 531 | 30-11-00 | 1004-1104 |
| RT2 | SENSOR-TEMP | 242 | 21-60-00 | 1004-1104 |
| RT20 | SENSOR TEMP. | 242 | 21-41-00 | 1004-1104 |
| RT21 | SENSOR TEMP. | 212 | 21-41-00 | 1004-1104 |
| RT22 | SENSOR TEMP. | 242 | 21-41-00 | 1004-1104 |
| RT23 | SENSOR TEMP. | 212 | 21-41-00 | 1004-1104 |
| RT3 | SENSOR-BATTERY TEMP | 282 | 31-60-00 | 1004-1104 |
| RT6 | SENSOR-OAT | 118 | 31-60-00 | 1004-1104 |
| RT601 | SENSOR-TEMPERATURE | 117 | 34-12-00 | 1004-1104 |
| RV1 | VARISTOR | SEE TB37 | 30-12-00 | 1004-1104 |
| RV10 | VARISTOR | AFT FS6000 | 77-10-00 | 1004-1104 |
| RV11 | VARISTOR | AFT FS6000 | 77-11-00 | 1004-1104 |
| RV12 | VARISTOR | AFT FS6000 | 77-11-00 | 1004-1104 |
| RV13 | VARISTOR | AFT FS6000 | 77-11-00 | 1004-1104 |
| RV14 | VARISTOR | AFT FS6000 | 77-11-00 | 1004-1104 |
| RV15 | VARISTOR | AFT FS6000 | 26-10-00 | 1004-1104 |
| RV15 | VARISTOR | SEE TB39 | 26-10-00 | 1004-1104 |
| RV16 | VARISTOR | AFT FS6000 | 26-10-00 | 1004-1104 |
| RV16 | VARISTOR | SEE TB38 | 26-10-00 | 1004-1104 |
| RV17 | VARISTOR | AFT FS6000 | 79-31-00 | 1004-1104 |
| RV18 | VARISTOR | AFT FS6000 | 79-31-00 | 1004-1104 |
| RV2 | VARISTOR | SEE TB36 | 30-12-00 | 1004-1104 |
| RV3 | VARISTOR | SEE TB37 | 30-12-00 | 1004-1104 |
| RV4 | VARISTOR | SEE TB36 | 30-12-00 | 1004-1104 |
| RV5 | VARISTOR | SEE TB37 | 30-12-00 | 1004-1104 |
| RV6 | VARISTOR | SEE TB36 | 30-12-00 | 1004-1104 |
| RV7 | VARISTOR | AFT FS6000 | 77-10-00 | 1004-1104 |
| RV8 | VARISTOR | AFT FS6000 | 77-10-00 | 1004-1104 |
| RV9 | VARISTOR | AFT FS6000 | 77-10-00 | 1004-1104 |
| S1 | SWITCH-BATTERY | 214 | 24-30-00 | 1004-1104 |
| S1 | SWITCH-BATTERY | SEE E4 | 24-30-00 | 1004-1104 |
| S1 | SWITCH-BATTERY | SEE E50 | 24-30-00 | 1004-1104 |
| S1 | SWITCH-BATTERY | 214 | 24-64-00 | 1004-1104 |

| CODE | NOMENCLATURE | LOCATION | MANUAL REF | EFF. |
|---|---|---|---|---|
| S1 | SWITCH-BATTERY | SEE E4 | 24-64-00 | 1004-1104 |
| S1 | SWITCH-BATTERY | SEE E50 | 24-64-00 | 1004-1104 |
| S1 | SWITCH-BATTERY | 214 | 31-12-20 | 1004-1104 |
| S1 | SWITCH-BATTERY | SEE E4 | 31-12-20 | 1004-1104 |
| S1 | SWITCH-BATTERY | SEE E50 | 31-12-20 | 1004-1104 |
| S1 | SWITCH-BATTERY | 214 | 34-27-00 | 1004-1104 |
| S1 | SWITCH-BATTERY | SEE E4 | 34-27-00 | 1004-1104 |
| S1 | SWITCH-BATTERY | SEE E50 | 34-27-00 | 1004-1104 |
| S10 | SWITCH-SEC INVERTER | 214 | 24-20-00 | 1004-1104 |
| S10 | SWITCH-SEC INVERTER | 214 | 31-12-20 | 1004-1104 |
| S100 | SWITCH-OVERTEMP | 291 | 21-10-00 | 1004-1104 |
| S100 | SWITCH-OVERTEMP | 291 | 21-20-00 | 1004-1104 |
| S100 | SWITCH-OVERTEMP | 291 | 21-40-00 | 1004-1104 |
| S101 | SWITCH-PRESSURE | 521 | 73-30-00 | 1004-1104 |
| S102 | SWITCH-PRESSURE | 621 | 73-30-00 | 1004-1104 |
| S103 | SWITCH-OIL LOW PRESS L | 410 | 79-31-00 | 1004-1104 |
| S104 | SWITCH-OIL LOW PRESS R | 420 | 79-31-00 | 1004-1104 |
| S105 | MICROSWITCH-PROP LOW PITCH L | 430 | 61-41-00 | 1004-1104 |
| S106 | MICROSWITCH-PROP LOW PITCH R | 440 | 61-41-00 | 1004-1104 |
| S107 | SWITCH PRESS-MAIN PUMP L | 251 | 28-20-00 | 1004-1104 |
| S108 | SWITCH PRESS-MAIN PUMP R | 252 | 28-20-00 | 1004-1104 |
| S11 | SWITCH-LTS LANDING/TAXI | 214 | 31-12-10 | 1004-1104 |
| S11 | SWITCH-LTS LANDING/TAXI | 214 | 33-40-00 | 1004-1104 |
| S110 | SWITCH-ENG OIL LEVEL R | 420 | 79-32-00 | 1004-1104 |
| S111 | SWITCH-ENG OIL LEVEL L | 410 | 79-32-00 | 1004-1104 |
| S112 | SWITCH-COCKPIT HEATER | 214 | 21-10-00 | 1004-1104 |
| S112 | SWITCH-COCKPIT HEATER | SEE E50 | 21-10-00 | 1004-1104 |
| S112 | SWITCH-COCKPIT HEATER | 214 | 21-20-00 | 1004-1104 |
| S112 | SWITCH-COCKPIT HEATER | SEE E50 | 21-20-00 | 1004-1104 |
| S112 | SWITCH-COCKPIT HEATER | 214 | 21-40-00 | 1004-1104 |
| S112 | SWITCH-COCKPIT HEATER | SEE E50 | 21-40-00 | 1004-1104 |
| S112 | SWITCH-COCKPIT HEATER | 214 | 31-12-30 | 1004-1104 |
| S112 | SWITCH-COCKPIT HEATER | SEE E50 | 31-12-30 | 1004-1104 |
| S119 | INDICATOR/SWITCH | 226 | 26-20-00 | 1004-1104 |
| S12 | SWITCH-LTS A/COLL | 214 | 31-12-10 | 1004-1104 |
| S12 | SWITCH-LTS A/COLL | 214 | 33-40-00 | 1004-1104 |
| S120 | INDICATOR/SWITCH | 226 | 26-20-00 | 1004-1104 |
| S121 | MICROSWITCH-BAG DOOR | 840 | 52-70-00 | 1004-1104 |
| S122 | MICROSWITCH-BAG DOOR | 840 | 52-70-00 | 1004-1104 |
| S123 | MICROSWITCH-CAB DOOR | 810 | 52-70-00 | 1004-1104 |
| S124 | MICROSWITCH-CAB DOOR | 810 | 52-70-00 | 1004-1104 |

| CODE | NOMENCLATURE | LOCATION | MANUAL REF | EFF. |
|---|---|---|---|---|
| S125 | MICROSWITCH-CAB DOOR | 810 | 52-70-00 | 1004-1104 |
| S126 | MICROSWITCH-CAB DOOR | 810 | 52-70-00 | 1004-1104 |
| S127 | MICROSWITCH CAB DOOR | 820 | 52-70-00 | 1004-1104 |
| S128 | MICROSWITCH CAB DOOR | 820 | 52-70-00 | 1004-1104 |
| S129 | MICROSWITCH CAB DOOR | 810 | 52-70-00 | 1004-1104 |
| S13 | SWITCH-WING INSP LT | 214 | 31-12-10 | 1004-1104 |
| S13 | SWITCH-WING INSP LT | 214 | 33-40-00 | 1004-1104 |
| S130 | MICROSWITCH CAB DOOR | 810 | 52-70-00 | 1004-1104 |
| S131 | MICROSWITCH-CAB DOOR | 810 | 52-70-00 | 1004-1104 |
| S132 | MICROSWITCH-CAB DOOR | 820 | 52-70-00 | 1004-1104 |
| S133 | MICROSWITCH-CAB DOOR | 820 | 52-70-00 | 1004-1104 |
| S138 | SWITCH-OVERTEMP | 611 | 21-10-00 | 1004-1104 |
| S138 | SWITCH-OVERTEMP | 611 | 21-20-00 | 1004-1104 |
| S138 | SWITCH-OVERTEMP | 611 | 21-40-00 | 1004-1104 |
| S139 | SWITCH-OVERTEMP | 511 | 21-10-00 | 1004-1104 |
| S139 | SWITCH-OVERTEMP | 511 | 21-20-00 | 1004-1104 |
| S139 | SWITCH-OVERTEMP | 511 | 21-40-00 | 1004-1104 |
| S14 | SWITCH-LTS POS | 214 | 31-12-10 | 1004-1104 |
| S14 | SWITCH-LTS POS | 214 | 33-40-00 | 1004-1104 |
| S140 | SWITCH-CAB SELECTOR | 214 | 21-31-00 | 1004-1104 |
| S140 | SWITCH-CAB SELECTOR | SEE E50 | 21-31-00 | 1004-1104 |
| S140 | SWITCH-CAB SELECTOR | 214 | 31-12-20 | 1004-1104 |
| S140 | SWITCH-CAB SELECTOR | SEE E50 | 31-12-20 | 1004-1104 |
| S141 | SWITCH-GEAR MUTE | 213 | 29-10-00 | 1004-1104 |
| S141 | SWITCH-GEAR MUTE | 213 | 29-30-00 | 1004-1104 |
| S141 | SWITCH-GEAR MUTE | 213 | 31-18-00 | 1004-1104 |
| S141 | SWITCH-GEAR MUTE | 213 | 32-30-00 | 1004-1104 |
| S141 | SWITCH-GEAR MUTE | 213 | 32-60-00 | 1004-1104 |
| S142 | SWITCH-OVERTEMP | 611 | 21-10-00 | 1004-1104 |
| S142 | SWITCH-OVERTEMP | 611 | 21-20-00 | 1004-1104 |
| S143 | SWITCH-OVERTEMP | 511 | 21-10-00 | 1004-1104 |
| S143 | SWITCH-OVERTEMP | 511 | 21-20-00 | 1004-1104 |
| S144 | SWITCH-OXY BAROMETRIC PRESS | 212 | 35-10-00 | 1004-1104 |
| S145 | SWITCH-OVERTEMP | 511 | 21-10-00 | 1004-1104 |
| S145 | SWITCH-OVERTEMP | 511 | 21-20-00 | 1004-1104 |
| S15 | SWITCH-WING INSP LT | 214 | 31-12-10 | 1004-1104 |
| S15 | SWITCH-WING INSP LT | 214 | 33-40-00 | 1004-1104 |
| S154 | SWITCH PRESS-HI PRESS TQ R | 420 | 61-20-00 | 1004-1104 |
| S155 | SWITCH PRESS-HI PRESS TQ L | 410 | 61-20-00 | 1004-1104 |
| S156 | SWITCH PRESS-LO PRESS TQ R | 420 | 61-20-00 | 1004-1104 |
| S157 | SWITCH PRESS-LO PRESS TQ L | 410 | 61-20-00 | 1004-1104 |

| CODE | NOMENCLATURE | LOCATION | MANUAL REF | EFF. |
|---|---|---|---|---|
| S16 | SWITCH-BOOST PUMPS R | 213 | 28-20-00 | 1004-1104 |
| S16 | SWITCH-BOOST PUMPS R | 213 | 31-13-10 | 1004-1104 |
| S160 | SWITCH-ARM | 213 | 31-13-30 | 1004-1104 |
| S160 | SWITCH-ARM | 213 | 61-20-00 | 1004-1104 |
| S1601 | SWITCH-ENTRY LIGHT | 231 | 33-13-00 | 1004-1104 |
| S1602 | SWITCH-VANITY LTS | 232 | 33-24-00 | 1004-1104 |
| S1602 | SWITCH-VANITY LTS | 232 | 33-25-00 | 1004-1104 |
| S1603 | LAMP-SWITCH-WATER HEATING | 242 | 25-42-00 | 1004-1104 |
| S1603 | LAMP-SWITCH-WATER HEATING | 242 REAR | 25-42-00 | 1004-1104 |
| S161 | SWITCH-EMERGENCY BLEED | 214 | 21-10-00 | 1004-1104 |
| S161 | SWITCH-EMERGENCY BLEED | SEE E50 | 21-10-00 | 1004-1104 |
| S161 | SWITCH-EMERGENCY BLEED | 214 | 21-20-00 | 1004-1104 |
| S161 | SWITCH-EMERGENCY BLEED | SEE E50 | 21-20-00 | 1004-1104 |
| S161 | SWITCH-EMERGENCY BLEED | 214 | 21-40-00 | 1004-1104 |
| S161 | SWITCH-EMERGENCY BLEED | SEE E50 | 21-40-00 | 1004-1104 |
| S161 | SWITCH-EMERGENCY BLEED | 214 | 31-12-20 | 1004-1104 |
| S161 | SWITCH-EMERGENCY BLEED | SEE E50 | 31-12-20 | 1004-1104 |
| S162 | SWITCH-OIL COOL R | 213 | 30-23-00 | 1004-1104 |
| S162 | SWITCH-OIL COOL R | 213 | 31-13-30 | 1004-1104 |
| S162 | SWITCH-OIL COOL R | 213 | 79-20-00 | 1004-1104 |
| S163 | SWITCH-OIL COOL L | 213 | 30-23-00 | 1004-1104 |
| S163 | SWITCH-OIL COOL L | 213 | 31-13-30 | 1004-1104 |
| S163 | SWITCH-OIL COOL L | 213 | 79-20-00 | 1004-1104 |
| S164 | MICROSWITCH-LTS DOOR | 110 | 33-40-00 | 1004-1104 |
| S165 | SWITCH-PRESSURE | 232 | 21-31-00 | 1004-1104 |
| S167 | SWITCH THERMAL-L FAN LWR | 111 | 21-51-00 | 1004-1104 |
| S168 | SWITCH THERMAL-R FAN LWR | 112 | 21-51-00 | 1004-1104 |
| S169 | SWITCH-FLT COMP LTS | 211 | 31-12-40 | 1004-1104 |
| S169 | SWITCH-FLT COMP LTS | 211 | 33-13-00 | 1004-1104 |
| S17 | SWITCH-BOOST PUMPS L | 213 | 28-20-00 | 1004-1104 |
| S17 | SWITCH-BOOST PUMPS L | 213 | 31-13-10 | 1004-1104 |
| S170 | SWITCH THERMAL-OIL COOL R | 420 | 30-23-00 | 1004-1104 |
| S170 | SWITCH THERMAL-OIL COOL R | 420 | 79-20-00 | 1004-1104 |
| S171 | SWITCH THERMAL-OIL COOL L | 410 | 30-23-00 | 1004-1104 |
| S171 | SWITCH THERMAL-OIL COOL L | 410 | 79-20-00 | 1004-1104 |
| S172 | SWITCH-PRESSURE | 231 | 21-31-00 | 1004-1104 |
| S173 | SWITCH-PRESSURE | 231 | 21-31-00 | 1004-1104 |
| S174 | SWITCH-PROP SYNCPH | 213 | 61-21-00 | 1004-1104 |
| S175 | SWITCH-PWR TEST | 214 | 32-43-00 | 1004-1104 |
| S176 | SWITCH-TEST | 214 | 32-43-00 | 1004-1104 |
| S178 | SWITCH-BAG LIGHT | 281 | 33-31-00 | 1004-1104 |

| CODE | NOMENCLATURE | LOCATION | MANUAL REF | EFF. |
|---|---|---|---|---|
| S179 | MICROSWITCH-BAG LIGHT | 840 | 33-31-00 | 1004-1104 |
| S18 | SWITCH-FUEL S/O VALVE R | 213 | 28-20-00 | 1004-1104 |
| S18 | SWITCH-FUEL S/O VALVE R | 213 | 31-13-10 | 1004-1104 |
| S180 | SWITCH-FREON AIR/COND | 214 | 21-10-00 | 1004-1104 |
| S180 | SWITCH-FREON AIR/COND | SEE E40 | 21-10-00 | 1004-1104 |
| S180 | SWITCH-FREON AIR/COND | 214 | 21-20-00 | 1004-1104 |
| S180 | SWITCH-FREON AIR/COND | SEE E40 | 21-20-00 | 1004-1104 |
| S180 | SWITCH-FREON AIR/COND | 214 | 21-40-00 | 1004-1104 |
| S180 | SWITCH-FREON AIR/COND | SEE E40 | 21-40-00 | 1004-1104 |
| S180 | SWITCH-FREON AIR/COND | 214 | 21-52-00 | 1004-1104 |
| S180 | SWITCH-FREON AIR/COND | SEE E40 | 21-52-00 | 1004-1104 |
| S180 | SWITCH-FREON AIR/COND | 214 | 31-12-30 | 1004-1104 |
| S180 | SWITCH-FREON AIR/COND | SEE E40 | 31-12-30 | 1004-1104 |
| S181 | SWITCH-FAN COCKPIT | 214 | 21-52-00 | 1004-1104 |
| S181 | SWITCH-FAN COCKPIT | SEE E40 | 21-52-00 | 1004-1104 |
| S181 | SWITCH-FAN COCKPIT | 214 | 31-12-30 | 1004-1104 |
| S181 | SWITCH-FAN COCKPIT | SEE E40 | 31-12-30 | 1004-1104 |
| S182 | SWITCH-FREON AIR/COND | 214 | 21-52-00 | 1004-1104 |
| S182 | SWITCH-FREON AIR/COND | SEE E40 | 21-52-00 | 1004-1104 |
| S182 | SWITCH-FREON AIR/COND | 214 | 31-12-30 | 1004-1104 |
| S182 | SWITCH-FREON AIR/COND | SEE E40 | 31-12-30 | 1004-1104 |
| S183 | SWITCH | SEE E50 | 21-41-00 | 1004-1104 |
| S183 | SWITCH | SEE E50 | 31-12-20 | 1004-1104 |
| S184 | SWITCH | SEE E50 | 21-41-00 | 1004-1104 |
| S184 | SWITCH | SEE E50 | 31-12-20 | 1004-1104 |
| S185 | SWITCH-TEMP | 231 | 21-10-00 | 1004-1104 |
| S185 | SWITCH-TEMP | 231 | 21-20-00 | 1004-1104 |
| S185 | SWITCH-TEMP | 231 | 21-40-00 | 1004-1104 |
| S186 | SWITCH-TEMP | 232 | 21-10-00 | 1004-1104 |
| S186 | SWITCH-TEMP | 232 | 21-20-00 | 1004-1104 |
| S186 | SWITCH-TEMP | 232 | 21-40-00 | 1004-1104 |
| S19 | SWITCH-FUEL S/O VALVE L | 213 | 28-20-00 | 1004-1104 |
| S19 | SWITCH-FUEL S/O VALVE L | 213 | 31-13-10 | 1004-1104 |
| S197 | MAGNETIC SWITCH | TBD | 79-30-00 | 1004-1104 |
| S198 | MAGNETIC SWITCH | TBD | 79-30-00 | 1004-1104 |
| S2 | SWITCH-ENG START R | 213 | 24-30-00 | 1004-1104 |
| S2 | SWITCH-ENG START R | 213 | 31-13-10 | 1004-1104 |
| S20 | SELECTOR-C/F VALVE | 213 | 28-20-00 | 1004-1104 |
| S20 | SELECTOR-C/F VALVE | 213 | 31-13-10 | 1004-1104 |
| S21 | SWITCH-IGN L | 213 | 24-30-00 | 1004-1104 |
| S21 | SWITCH-IGN L | 213 | 31-13-10 | 1004-1104 |

| CODE | NOMENCLATURE | LOCATION | MANUAL REF | EFF. |
|---|---|---|---|---|
| S22 | SWITCH-IGN R | 213 | 24-30-00 | 1004-1104 |
| S22 | SWITCH-IGN R | 213 | 31-13-10 | 1004-1104 |
| S23 | SWITCH-OVERTEMP | 522 | 21-10-00 | 1004-1104 |
| S23 | SWITCH-OVERTEMP | 522 | 21-20-00 | 1004-1104 |
| S23 | SWITCH-OVERTEMP | 522 | 21-40-00 | 1004-1104 |
| S24 | SWITCH-AUTO/MAN | 214 | 21-60-00 | 1004-1104 |
| S24 | SWITCH-AUTO/MAN | SEE E50 | 21-60-00 | 1004-1104 |
| S24 | SWITCH-AUTO/MAN | 214 | 31-12-20 | 1004-1104 |
| S24 | SWITCH-AUTO/MAN | SEE E50 | 31-12-20 | 1004-1104 |
| S25 | SWITCH-MAN CTRL | 214 | 21-60-00 | 1004-1104 |
| S25 | SWITCH-MAN CTRL | SEE E50 | 21-60-00 | 1004-1104 |
| S25 | SWITCH-MAN CTRL | 214 | 31-12-20 | 1004-1104 |
| S25 | SWITCH-MAN CTRL | SEE E50 | 31-12-20 | 1004-1104 |
| S26 | SWITCH-OVERTEMP | 622 | 21-10-00 | 1004-1104 |
| S26 | SWITCH-OVERTEMP | 622 | 21-20-00 | 1004-1104 |
| S26 | SWITCH-OVERTEMP | 622 | 21-40-00 | 1004-1104 |
| S27 | SWITCH-WSHLD HTR-PRI | 214 | 30-40-00 | 1004-1104 |
| S27 | SWITCH-WSHLD HTR-PRI | 214 | 31-12-10 | 1004-1104 |
| S28 | SWITCH-WSHLD HTR-SEC | 214 | 30-40-00 | 1004-1104 |
| S28 | SWITCH-WSHLD HTR-SEC | 214 | 31-12-10 | 1004-1104 |
| S3 | SWITCH-ENG START L | 213 | 24-30-00 | 1004-1104 |
| S3 | SWITCH-ENG START L | 213 | 31-13-10 | 1004-1104 |
| S30 | SWITCH-FWD WING A/I R | 214 | 30-12-00 | 1004-1104 |
| S30 | SWITCH-FWD WING A/I R | 214 | 31-12-10 | 1004-1104 |
| S31 | SWITCH-FWD WING A/I L | 214 | 30-12-00 | 1004-1104 |
| S31 | SWITCH-FWD WING A/I L | 214 | 31-12-10 | 1004-1104 |
| S32 | SWITCH-PAXS ADV | 214 | 31-12-10 | 1004-1104 |
| S32 | SWITCH-PAXS ADV | 214 | 33-26-00 | 1004-1104 |
| S33 | SWITCH-PITOT/STL HTR R | 214 | 30-30-00 | 1004-1104 |
| S33 | SWITCH-PITOT/STL HTR R | SEE E25 | 30-30-00 | 1004-1104 |
| S33 | SWITCH-PITOT/STL HTR R | 214 | 31-12-10 | 1004-1104 |
| S33 | SWITCH-PITOT/STL HTR R | SEE E25 | 31-12-10 | 1004-1104 |
| S34 | SWITCH-PITOT/STL HTR L | 214 | 30-30-00 | 1004-1104 |
| S34 | SWITCH-PITOT/STL HTR L | SEE E25 | 30-30-00 | 1004-1104 |
| S34 | SWITCH-PITOT/STL HTR L | 214 | 31-12-10 | 1004-1104 |
| S34 | SWITCH-PITOT/STL HTR L | SEE E25 | 31-12-10 | 1004-1104 |
| S35 | SWITCH-ENG ICE VANE L | 214 | 30-23-00 | 1004-1104 |
| S35 | SWITCH-ENG ICE VANE L | SEE E25 | 30-23-00 | 1004-1104 |
| S35 | SWITCH-ENG ICE VANE L | 214 | 30-24-00 | 1004-1104 |
| S35 | SWITCH-ENG ICE VANE L | SEE E25 | 30-24-00 | 1004-1104 |
| S35 | SWITCH-ENG ICE VANE L | 214 | 31-12-10 | 1004-1104 |

| CODE | NOMENCLATURE | LOCATION | MANUAL REF | EFF. |
|---|---|---|---|---|
| S35 | SWITCH-ENG ICE VANE L | SEE E25 | 31-12-10 | 1004-1104 |
| S35 | SWITCH-ENG ICE VANE L | 214 | 79-20-00 | 1004-1104 |
| S35 | SWITCH-ENG ICE VANE L | SEE E25 | 79-20-00 | 1004-1104 |
| S36 | SWITCH-ENG ICE VANE R | 214 | 30-23-00 | 1004-1104 |
| S36 | SWITCH-ENG ICE VANE R | SEE E25 | 30-23-00 | 1004-1104 |
| S36 | SWITCH-ENG ICE VANE R | 214 | 30-24-00 | 1004-1104 |
| S36 | SWITCH-ENG ICE VANE R | SEE E25 | 30-24-00 | 1004-1104 |
| S36 | SWITCH-ENG ICE VANE R | 214 | 31-12-10 | 1004-1104 |
| S36 | SWITCH-ENG ICE VANE R | SEE E25 | 31-12-10 | 1004-1104 |
| S36 | SWITCH-ENG ICE VANE R | 214 | 79-20-00 | 1004-1104 |
| S36 | SWITCH-ENG ICE VANE R | SEE E25 | 79-20-00 | 1004-1104 |
| S37 | SWITCH-WING A/I L | 214 | 30-11-00 | 1004-1104 |
| S37 | SWITCH-WING A/I L | 214 | 31-12-10 | 1004-1104 |
| S38 | SWITCH-PROP OVSP TEST L/R | 213 | 31-13-10 | 1004-1104 |
| S38 | SWITCH-PROP OVSP TEST L/R | 213 | 61-41-00 | 1004-1104 |
| S4 | SWITCH-MASTER AVCS | 214 | 23-11-20 | 1004-1104 |
| S4 | SWITCH-MASTER AVCS | SEE E50 | 23-11-20 | 1004-1104 |
| S4 | SWITCH-MASTER AVCS | 214 | 23-50-00 | 1004-1104 |
| S4 | SWITCH-MASTER AVCS | SEE E50 | 23-50-00 | 1004-1104 |
| S4 | SWITCH-MASTER AVCS | 214 | 24-61-00 | 1004-1104 |
| S4 | SWITCH-MASTER AVCS | SEE E50 | 24-61-00 | 1004-1104 |
| S4 | SWITCH-MASTER AVCS | 214 | 31-12-20 | 1004-1104 |
| S4 | SWITCH-MASTER AVCS | SEE E50 | 31-12-20 | 1004-1104 |
| S40 | SWITCH-WING A/I R | 214 | 30-11-00 | 1004-1104 |
| S40 | SWITCH-WING A/I R | 214 | 31-12-10 | 1004-1104 |
| S41 | SWITCH-ENG INLET DEICE CTRL | 214 | 30-22-00 | 1004-1104 |
| S41 | SWITCH-ENG INLET DEICE CTRL | SEE E25 | 30-22-00 | 1004-1104 |
| S41 | SWITCH-ENG INLET DEICE CTRL | 214 | 31-12-10 | 1004-1104 |
| S41 | SWITCH-ENG INLET DEICE CTRL | SEE E25 | 31-12-10 | 1004-1104 |
| S42 | SW PRESS-ENG INLET DEICE R | 420 | 30-22-00 | 1004-1104 |
| S43 | SW PRESS-ENG INLET DEICE L | 410 | 30-22-00 | 1004-1104 |
| S46 | SWITCH-BLEED AIR R | 214 | 21-10-00 | 1004-1104 |
| S46 | SWITCH-BLEED AIR R | SEE E50 | 21-10-00 | 1004-1104 |
| S46 | SWITCH-BLEED AIR R | 214 | 21-20-00 | 1004-1104 |
| S46 | SWITCH-BLEED AIR R | SEE E50 | 21-20-00 | 1004-1104 |
| S46 | SWITCH-BLEED AIR R | 214 | 21-40-00 | 1004-1104 |
| S46 | SWITCH-BLEED AIR R | SEE E50 | 21-40-00 | 1004-1104 |
| S46 | SWITCH-BLEED AIR R | 214 | 21-41-00 | 1004-1104 |
| S46 | SWITCH-BLEED AIR R | SEE E50 | 21-41-00 | 1004-1104 |
| S46 | SWITCH-BLEED AIR R | 214 | 31-12-20 | 1004-1104 |
| S46 | SWITCH-BLEED AIR R | SEE E50 | 31-12-20 | 1004-1104 |

| CODE | NOMENCLATURE | LOCATION | MANUAL REF | EFF. |
|---|---|---|---|---|
| S47 | SWITCH-BLEED AIR L | 214 | 21-10-00 | 1004-1104 |
| S47 | SWITCH-BLEED AIR L | SEE E50 | 21-10-00 | 1004-1104 |
| S47 | SWITCH-BLEED AIR L | 214 | 21-20-00 | 1004-1104 |
| S47 | SWITCH-BLEED AIR L | SEE E50 | 21-20-00 | 1004-1104 |
| S47 | SWITCH-BLEED AIR L | 214 | 21-40-00 | 1004-1104 |
| S47 | SWITCH-BLEED AIR L | SEE E50 | 21-40-00 | 1004-1104 |
| S47 | SWITCH-BLEED AIR L | 214 | 21-41-00 | 1004-1104 |
| S47 | SWITCH-BLEED AIR L | SEE E50 | 21-41-00 | 1004-1104 |
| S47 | SWITCH-BLEED AIR L | 214 | 31-12-20 | 1004-1104 |
| S47 | SWITCH-BLEED AIR L | SEE E50 | 31-12-20 | 1004-1104 |
| S48 | SWITCH - FLOOR BLOWER - | 214 | 21-10-00 | 1004-1104 |
| S48 | SWITCH - FLOOR BLOWER - | SEE E50 | 21-10-00 | 1004-1104 |
| S48 | SWITCH - FLOOR BLOWER - | 214 | 21-20-00 | 1004-1104 |
| S48 | SWITCH - FLOOR BLOWER - | SEE E50 | 21-20-00 | 1004-1104 |
| S48 | SWITCH - FLOOR BLOWER - | 214 | 21-40-00 | 1004-1104 |
| S48 | SWITCH - FLOOR BLOWER - | SEE E50 | 21-40-00 | 1004-1104 |
| S48 | SWITCH - FLOOR BLOWER - | 214 | 31-12-20 | 1004-1104 |
| S48 | SWITCH - FLOOR BLOWER - | SEE E50 | 31-12-20 | 1004-1104 |
| S49 | SWITCH - COCKPIT BLOWER - | 214 | 21-10-00 | 1004-1104 |
| S49 | SWITCH - COCKPIT BLOWER - | SEE E50 | 21-10-00 | 1004-1104 |
| S49 | SWITCH - COCKPIT BLOWER - | 214 | 21-20-00 | 1004-1104 |
| S49 | SWITCH - COCKPIT BLOWER - | SEE E50 | 21-20-00 | 1004-1104 |
| S49 | SWITCH - COCKPIT BLOWER - | 214 | 21-40-00 | 1004-1104 |
| S49 | SWITCH - COCKPIT BLOWER - | SEE E50 | 21-40-00 | 1004-1104 |
| S49 | SWITCH - COCKPIT BLOWER - | 214 | 31-12-20 | 1004-1104 |
| S49 | SWITCH - COCKPIT BLOWER - | SEE E50 | 31-12-20 | 1004-1104 |
| S5 | SWITCH-GEN L | 214 | 24-30-00 | 1004-1104 |
| S5 | SWITCH-GEN L | SEE E50 | 24-30-00 | 1004-1104 |
| S5 | SWITCH-GEN L | 214 | 26-20-00 | 1004-1104 |
| S5 | SWITCH-GEN L | SEE E50 | 26-20-00 | 1004-1104 |
| S5 | SWITCH-GEN L | 214 | 31-12-20 | 1004-1104 |
| S5 | SWITCH-GEN L | SEE E50 | 31-12-20 | 1004-1104 |
| S50 | SWITCH-MASTER WRN | 211 | 22-11-00 | 1004-1104 |
| S50 | SWITCH-MASTER WRN | 211 | 31-12-40 | 1004-1104 |
| S50 | SWITCH-MASTER WRN | 211 | 31-52-00 | 1004-1104 |
| S50 | SWITCH-MASTER WRN | 211 | 31-60-00 | 1004-1104 |
| S50 | SWITCH-MASTER WRN | 211 | 34-43-00 | 1004-1104 |
| S50 | SWITCH-MASTER WRN | 211 | 34-56-00 | 1004-1104 |
| S50 | SWITCH-MASTER WRN | 211 | 34-59-10 | 1004-1104 |
| S50 | SWITCH-MASTER WRN | 211 | 34-59-20 | 1004-1104 |
| S50 | SWITCH-MASTER WRN | 211 | 34-59-30 | 1004-1104 |

| CODE | NOMENCLATURE | LOCATION | MANUAL REF | EFF. |
|---|---|---|---|---|
| S50 | SWITCH-MASTER WRN | 211 | 34-59-40 | 1004-1104 |
| S50 | SWITCH-MASTER WRN | 211 | 34-59-60 | 1004-1104 |
| S50 | SWITCH-MASTER WRN | 211 | 34-59-70 | 1004-1104 |
| S50 | SWITCH-MASTER WRN | 211 | 34-59-80 | 1004-1104 |
| S50 | SWITCH-MASTER WRN | 211 | 34-59-90 | 1004-1104 |
| S52 | SWITCH-AUTO/MAN PRESS | 214 | 21-31-00 | 1004-1104 |
| S52 | SWITCH-AUTO/MAN PRESS | SEE E50 | 21-31-00 | 1004-1104 |
| S52 | SWITCH-AUTO/MAN PRESS | 214 | 31-12-20 | 1004-1104 |
| S52 | SWITCH-AUTO/MAN PRESS | SEE E50 | 31-12-20 | 1004-1104 |
| S53 | SWITCH-CAB PRESS DUMP | 214 | 21-31-00 | 1004-1104 |
| S53 | SWITCH-CAB PRESS DUMP | SEE E50 | 21-31-00 | 1004-1104 |
| S53 | SWITCH-CAB PRESS DUMP | 214 | 31-12-20 | 1004-1104 |
| S53 | SWITCH-CAB PRESS DUMP | SEE E50 | 31-12-20 | 1004-1104 |
| S56 | SWITCH-CPLT MASTER | 228 | 27-00-00 | 1004-1104 |
| S56 | SWITCH-CPLT MASTER | 228 | 32-51-00 | 1004-1104 |
| S57 | SWITCH-PLT MASTER | 227 | 27-00-00 | 1004-1104 |
| S57 | SWITCH-PLT MASTER | 227 | 32-51-00 | 1004-1104 |
| S58 | SWITCH-CPLT C/W TRIM | 228 | 27-00-00 | 1004-1104 |
| S59 | SWITCH-PLT C/W TRIM | 227 | 27-00-00 | 1004-1104 |
| S6 | SWITCH-GEN R | 214 | 24-30-00 | 1004-1104 |
| S6 | SWITCH-GEN R | SEE E50 | 24-30-00 | 1004-1104 |
| S6 | SWITCH-GEN R | 214 | 26-20-00 | 1004-1104 |
| S6 | SWITCH-GEN R | SEE E50 | 26-20-00 | 1004-1104 |
| S6 | SWITCH-GEN R | 214 | 31-12-20 | 1004-1104 |
| S6 | SWITCH-GEN R | SEE E50 | 31-12-20 | 1004-1104 |
| S60 | SWITCH-PITCH TRIM PRI | 213 | 27-00-00 | 1004-1104 |
| S60 | SWITCH-PITCH TRIM PRI | 213 | 31-13-20 | 1004-1104 |
| S601 | PUSH BUTTON | 227 | 23-50-00 | 1004-1104 |
| S601 | PUSH BUTTON | SEE E57 | 23-50-00 | 1004-1104 |
| S602 | PUSH BUTTON | 228 | 23-50-00 | 1004-1104 |
| S602 | PUSH BUTTON | SEE E58 | 23-50-00 | 1004-1104 |
| S603 | SWITCH-ELT SYST | 282 | 25-61-00 | 1004-1104 |
| S605 | PUSH BUTTON | 228 | 22-10-00 | 1004-1104 |
| S605 | PUSH BUTTON | SEE E57 | 22-10-00 | 1004-1104 |
| S606 | PUSH BUTTON | 228 | 22-10-00 | 1004-1104 |
| S606 | PUSH BUTTON | SEE E58 | 22-10-00 | 1004-1104 |
| S61 | SWITCH-PITCH TRIM PRI | 213 | 27-00-00 | 1004-1104 |
| S61 | SWITCH-PITCH TRIM PRI | 213 | 31-13-20 | 1004-1104 |
| S62 | SWITCH-YAW TRIM | 213 | 27-00-00 | 1004-1104 |
| S62 | SWITCH-YAW TRIM | 213 | 31-13-20 | 1004-1104 |
| S629 | SWITCH-GEAR MUTE | 213 | 22-10-00 | 1004-1104 |

| CODE | NOMENCLATURE | LOCATION | MANUAL REF | EFF. |
|---|---|---|---|---|
| S629 | SWITCH-GEAR MUTE | SEE E38 | 22-10-00 | 1004-1104 |
| S629 | SWITCH-GEAR MUTE | 213 | 31-18-00 | 1004-1104 |
| S629 | SWITCH-GEAR MUTE | SEE E38 | 31-18-00 | 1004-1104 |
| S63 | SWITCH-OVERTEMP | 511 | 21-10-00 | 1004-1104 |
| S63 | SWITCH-OVERTEMP | 511 | 21-20-00 | 1004-1104 |
| S63 | SWITCH-OVERTEMP | 511 | 21-40-00 | 1004-1104 |
| S630 | SWITCH-DIRECTIONAL GYRO | 111 | 34-21-00 | 1004-1104 |
| S630 | SWITCH-DIRECTIONAL GYRO | 111 | 34-22-00 | 1004-1104 |
| S630 | SWITCH-DIRECTIONAL GYRO | 111 | 34-28-00 | 1004-1104 |
| S631 | SWITCH-HDG1/HDG2 | 223 | 22-11-00 | 1004-1104 |
| S631 | SWITCH-HDG1/HDG2 | SEE EFIS P | 22-11-00 | 1004-1104 |
| S631 | SWITCH-HDG1/HDG2 | 223 | 31-17-10 | 1004-1104 |
| S631 | SWITCH-HDG1/HDG2 | SEE EFIS P | 31-17-10 | 1004-1104 |
| S631 | SWITCH-HDG1/HDG2 | 223 | 31-17-20 | 1004-1104 |
| S631 | SWITCH-HDG1/HDG2 | SEE EFIS P | 31-17-20 | 1004-1104 |
| S631 | SWITCH-HDG1/HDG2 | 223 | 34-23-00 | 1004-1104 |
| S631 | SWITCH-HDG1/HDG2 | SEE EFIS P | 34-23-00 | 1004-1104 |
| S633 | SWITCH-DPU/MPU | 223 | 31-17-10 | 1004-1104 |
| S633 | SWITCH-DPU/MPU | 223 | 31-17-20 | 1004-1104 |
| S633 | SWITCH-DPU/MPU | 223 | 34-23-00 | 1004-1104 |
| S635 | SWITCH | 227 | 34-23-00 | 1004-1104 |
| S637 | SWITCH | 223 | 31-17-10 | 1004-1104 |
| S637 | SWITCH | 223 | 31-17-20 | 1004-1104 |
| S637 | SWITCH | 223 | 34-23-00 | 1004-1104 |
| S639 | SWITCH | SEE EFIS P | 22-11-00 | 1004-1104 |
| S639 | SWITCH | SEE EFIS P | 31-17-10 | 1004-1104 |
| S639 | SWITCH | SEE EFIS P | 31-17-20 | 1004-1104 |
| S639 | SWITCH | SEE EFIS P | 34-23-00 | 1004-1104 |
| S64 | SWITCH-OVERTEMP | 611 | 21-10-00 | 1004-1104 |
| S64 | SWITCH-OVERTEMP | 611 | 21-20-00 | 1004-1104 |
| S64 | SWITCH-OVERTEMP | 611 | 21-40-00 | 1004-1104 |
| S640 | SWITCH-COMMMAND BAR | 224 | 34-24-00 | 1004-1104 |
| S641 | BULB | 223 | 22-11-00 | 1004-1104 |
| S642 | BULB | 224 | 22-11-00 | 1004-1104 |
| S643 | BULB | 223 | 22-11-00 | 1004-1104 |
| S644 | BULB | 224 | 22-11-00 | 1004-1104 |
| S645 | PUSHBUTTON | 231 & 241 | 23-30-00 | 1004-1104 |
| S645 | PUSHBUTTON | SEE E640 | 23-30-00 | 1004-1104 |
| S646 | SWITCH-VIDEO PWR | 231 & 241 | 23-30-00 | 1004-1104 |
| S646 | SWITCH-VIDEO PWR | SEE E640 | 23-30-00 | 1004-1104 |
| S647 | SWITCH-LCD CTRL | 231 & 241 | 23-30-00 | 1004-1104 |

| CODE | NOMENCLATURE | LOCATION | MANUAL REF | EFF. |
|---|---|---|---|---|
| S647 | SWITCH-LCD CTRL | SEE E640 | 23-30-00 | 1004-1104 |
| S65 | SWITCH-PITCH TRIM SEC | 213 | 27-00-00 | 1004-1104 |
| S65 | SWITCH-PITCH TRIM SEC | 213 | 31-13-20 | 1004-1104 |
| S650 | PUSHBUTTON | 231 & 241 | 23-30-00 | 1004-1104 |
| S650 | PUSHBUTTON | SEE E640 | 23-30-00 | 1004-1104 |
| S652 | SWITCH - CTRL VOL | 231 & 241 | 23-30-00 | 1004-1104 |
| S652 | SWITCH - CTRL VOL | SEE E640 | 23-30-00 | 1004-1104 |
| S654 | SWITCH | 224 | 22-11-00 | 1004-1104 |
| S656 | SWITCH-AUDIO3 | 224 | 23-52-00 | 1004-1104 |
| S656 | SWITCH-AUDIO3 | TBD | 23-52-00 | 1004-1104 |
| S657 | LAMP SWITCH | 223 | 34-10-00 | 1004-1104 |
| S658 | LAMP SWITCH | 224 | 34-10-00 | 1004-1104 |
| S659 | SWITCH | 213 | 34-43-00 | 1004-1104 |
| S660 | LAMP SWITCH | 213 | 34-43-00 | 1004-1104 |
| S7 | SWITCH-BUS DISCONNECT | 214 | 24-30-00 | 1004-1104 |
| S7 | SWITCH-BUS DISCONNECT | SEE E50 | 24-30-00 | 1004-1104 |
| S7 | SWITCH-BUS DISCONNECT | 214 | 31-12-20 | 1004-1104 |
| S7 | SWITCH-BUS DISCONNECT | SEE E50 | 31-12-20 | 1004-1104 |
| S70 | SELECTOR-SYST TEST | 214 | 26-10-00 | 1004-1104 |
| S70 | SELECTOR-SYST TEST | 214 | 27-32-00 | 1004-1104 |
| S70 | SELECTOR-SYST TEST | 214 | 27-50-00 | 1004-1104 |
| S70 | SELECTOR-SYST TEST | 214 | 28-41-00 | 1004-1104 |
| S70 | SELECTOR-SYST TEST | 214 | 29-10-00 | 1004-1104 |
| S70 | SELECTOR-SYST TEST | 214 | 29-30-00 | 1004-1104 |
| S70 | SELECTOR-SYST TEST | 214 | 30-11-00 | 1004-1104 |
| S70 | SELECTOR-SYST TEST | 214 | 30-12-00 | 1004-1104 |
| S70 | SELECTOR-SYST TEST | 214 | 30-80-00 | 1004-1104 |
| S70 | SELECTOR-SYST TEST | 214 | 31-12-10 | 1004-1104 |
| S70 | SELECTOR-SYST TEST | 214 | 31-19-11 | 1004-1104 |
| S70 | SELECTOR-SYST TEST | 214 | 31-50-00 | 1004-1104 |
| S70 | SELECTOR-SYST TEST | 214 | 31-60-00 | 1004-1104 |
| S70 | SELECTOR-SYST TEST | 214 | 32-30-00 | 1004-1104 |
| S70 | SELECTOR-SYST TEST | 214 | 32-51-00 | 1004-1104 |
| S70 | SELECTOR-SYST TEST | 214 | 32-60-00 | 1004-1104 |
| S70 | SELECTOR-SYST TEST | 214 | 34-12-00 | 1004-1104 |
| S70 | SELECTOR-SYST TEST | 214 | 34-23-00 | 1004-1104 |
| S70 | SELECTOR-SYST TEST | 214 | 34-43-00 | 1004-1104 |
| S70 | SELECTOR-SYST TEST | 214 | 34-44-00 | 1004-1104 |
| S70 | SELECTOR-SYST TEST | 214 | 34-45-00 | 1004-1104 |
| S70 | SELECTOR-SYST TEST | 214 | 34-56-00 | 1004-1104 |
| S70 | SELECTOR-SYST TEST | 214 | 34-59-10 | 1004-1104 |

| CODE | NOMENCLATURE | LOCATION | MANUAL REF | EFF. |
|---|---|---|---|---|
| S70 | SELECTOR-SYST TEST | 214 | 34-59-20 | 1004-1104 |
| S70 | SELECTOR-SYST TEST | 214 | 34-59-30 | 1004-1104 |
| S70 | SELECTOR-SYST TEST | 214 | 34-59-40 | 1004-1104 |
| S70 | SELECTOR-SYST TEST | 214 | 34-59-60 | 1004-1104 |
| S70 | SELECTOR-SYST TEST | 214 | 34-59-70 | 1004-1104 |
| S70 | SELECTOR-SYST TEST | 214 | 34-59-80 | 1004-1104 |
| S70 | SELECTOR-SYST TEST | 214 | 34-59-90 | 1004-1104 |
| S70 | SELECTOR-SYST TEST | 214 | 61-41-00 | 1004-1104 |
| S70 | SELECTOR-SYST TEST | 214 | 73-30-00 | 1004-1104 |
| S70 | SELECTOR-SYST TEST | 214 | 77-10-00 | 1004-1104 |
| S70 | SELECTOR-SYST TEST | 214 | 77-11-00 | 1004-1104 |
| S70 | SELECTOR-SYST TEST | 214 | 77-20-00 | 1004-1104 |
| S70 | SELECTOR-SYST TEST | 214 | 79-31-00 | 1004-1104 |
| S71 | SWITCH-PRESSURE | 232 | 21-31-00 | 1004-1104 |
| S74 | SWITCH-LDG GEAR CTRL LVR | 214 | 29-10-00 | 1004-1104 |
| S74 | SWITCH-LDG GEAR CTRL LVR | 214 | 29-30-00 | 1004-1104 |
| S74 | SWITCH-LDG GEAR CTRL LVR | 214 | 31-12-20 | 1004-1104 |
| S74 | SWITCH-LDG GEAR CTRL LVR | 214 | 32-30-00 | 1004-1104 |
| S74 | SWITCH-LDG GEAR CTRL LVR | 214 | 32-60-00 | 1004-1104 |
| S76 | SWITCH-STEERING CTRL | 227 | 32-51-00 | 1004-1104 |
| S77 | SWITCH-HYDRAULIC CTRL | 214 | 29-10-00 | 1004-1104 |
| S77 | SWITCH-HYDRAULIC CTRL | 214 | 29-30-00 | 1004-1104 |
| S77 | SWITCH-HYDRAULIC CTRL | 214 | 31-12-20 | 1004-1104 |
| S77 | SWITCH-HYDRAULIC CTRL | 214 | 32-30-00 | 1004-1104 |
| S77 | SWITCH-HYDRAULIC CTRL | 214 | 32-60-00 | 1004-1104 |
| S78 | SWITCH-THERMAL-WING A/I R | 631 | 30-11-00 | 1004-1104 |
| S79 | SWITCH-THERMAL-WING A/I L | 531 | 30-11-00 | 1004-1104 |
| S8 | MICROSWITCH-RH-GEAR WT | 252 | 24-30-00 | 1004-1104 |
| S8 | MICROSWITCH-RH-GEAR WT | 252 | 27-32-00 | 1004-1104 |
| S8 | MICROSWITCH-RH-GEAR WT | 252 | 29-10-00 | 1004-1104 |
| S8 | MICROSWITCH-RH-GEAR WT | 252 | 29-30-00 | 1004-1104 |
| S8 | MICROSWITCH-RH-GEAR WT | 252 | 30-12-00 | 1004-1104 |
| S8 | MICROSWITCH-RH-GEAR WT | 252 | 32-30-00 | 1004-1104 |
| S8 | MICROSWITCH-RH-GEAR WT | 252 | 32-43-00 | 1004-1104 |
| S8 | MICROSWITCH-RH-GEAR WT | 252 | 32-60-00 | 1004-1104 |
| S8 | MICROSWITCH-RH-GEAR WT | 252 | 34-43-00 | 1004-1104 |
| S84 | MICROSWITCH-R GEAR DN LIMIT | 252 | 29-10-00 | 1004-1104 |
| S84 | MICROSWITCH-R GEAR DN LIMIT | 252 | 29-30-00 | 1004-1104 |
| S84 | MICROSWITCH-R GEAR DN LIMIT | 252 | 32-30-00 | 1004-1104 |
| S84 | MICROSWITCH-R GEAR DN LIMIT | 252 | 32-60-00 | 1004-1104 |
| S85 | MICROSWITCH L MLG WT | 251 | 21-31-00 | 1004-1104 |

| CODE | NOMENCLATURE | LOCATION | MANUAL REF | EFF. |
|---|---|---|---|---|
| S85 | MICROSWITCH L MLG WT | 251 | 21-41-00 | 1004-1104 |
| S85 | MICROSWITCH L MLG WT | 251 | 24-64-00 | 1004-1104 |
| S85 | MICROSWITCH L MLG WT | 251 | 29-10-00 | 1004-1104 |
| S85 | MICROSWITCH L MLG WT | 251 | 29-30-00 | 1004-1104 |
| S85 | MICROSWITCH L MLG WT | 251 | 30-12-00 | 1004-1104 |
| S85 | MICROSWITCH L MLG WT | 251 | 32-30-00 | 1004-1104 |
| S85 | MICROSWITCH L MLG WT | 251 | 32-60-00 | 1004-1104 |
| S85 | MICROSWITCH L MLG WT | 251 | 34-27-00 | 1004-1104 |
| S85 | MICROSWITCH L MLG WT | 251 | 34-54-20 | 1004-1104 |
| S85 | MICROSWITCH L MLG WT | 251 | 34-54-21 | 1004-1104 |
| S85 | MICROSWITCH L MLG WT | 251 | 34-54-30 | 1004-1104 |
| S85 | MICROSWITCH L MLG WT | 251 | 34-54-40 | 1004-1104 |
| S85 | MICROSWITCH L MLG WT | 251 | 45-45-00 | 1004-1104 |
| S85 | MICROSWITCH L MLG WT | 251 | 45-60-00 | 1004-1104 |
| S86 | MICROSWITCH | 252 | 29-10-00 | 1004-1104 |
| S86 | MICROSWITCH | 252 | 29-30-00 | 1004-1104 |
| S86 | MICROSWITCH | 252 | 32-30-00 | 1004-1104 |
| S86 | MICROSWITCH | 252 | 32-60-00 | 1004-1104 |
| S87 | MICROSWITCH | 251 | 29-10-00 | 1004-1104 |
| S87 | MICROSWITCH | 251 | 29-30-00 | 1004-1104 |
| S87 | MICROSWITCH | 251 | 32-30-00 | 1004-1104 |
| S87 | MICROSWITCH | 251 | 32-60-00 | 1004-1104 |
| S88 | MICROSWITCH | 720 | 29-10-00 | 1004-1104 |
| S88 | MICROSWITCH | 720 | 29-30-00 | 1004-1104 |
| S88 | MICROSWITCH | 720 | 32-30-00 | 1004-1104 |
| S88 | MICROSWITCH | 720 | 32-60-00 | 1004-1104 |
| S89 | MICROSWITCH | 251 | 29-10-00 | 1004-1104 |
| S89 | MICROSWITCH | 251 | 29-30-00 | 1004-1104 |
| S89 | MICROSWITCH | 251 | 32-30-00 | 1004-1104 |
| S89 | MICROSWITCH | 251 | 32-60-00 | 1004-1104 |
| S9 | SWITCH-PRI INVERTER | 214 | 24-20-00 | 1004-1104 |
| S9 | SWITCH-PRI INVERTER | 214 | 31-12-20 | 1004-1104 |
| S90 | MICROSWITCH | 710 | 29-10-00 | 1004-1104 |
| S90 | MICROSWITCH | 710 | 29-30-00 | 1004-1104 |
| S90 | MICROSWITCH | 710 | 32-30-00 | 1004-1104 |
| S90 | MICROSWITCH | 710 | 32-60-00 | 1004-1104 |
| S91 | MICROSWITCH | 730 | 29-10-00 | 1004-1104 |
| S91 | MICROSWITCH | 730 | 29-30-00 | 1004-1104 |
| S91 | MICROSWITCH | 730 | 32-30-00 | 1004-1104 |
| S91 | MICROSWITCH | 730 | 32-60-00 | 1004-1104 |
| S92 | MICROSWITCH | 710 | 29-10-00 | 1004-1104 |

| CODE | NOMENCLATURE | LOCATION | MANUAL REF | EFF. |
|---|---|---|---|---|
| S92 | MICROSWITCH | 710 | 29-30-00 | 1004-1104 |
| S92 | MICROSWITCH | 710 | 32-30-00 | 1004-1104 |
| S92 | MICROSWITCH | 710 | 32-51-00 | 1004-1104 |
| S92 | MICROSWITCH | 710 | 32-60-00 | 1004-1104 |
| S92 | MICROSWITCH | 710 | 45-60-00 | 1004-1104 |
| S93 | MICROSWITCH-NLG WT | 710 | 22-10-00 | 1004-1104 |
| S93 | MICROSWITCH-NLG WT | 710 | 27-32-00 | 1004-1104 |
| S93 | MICROSWITCH-NLG WT | 710 | 29-10-00 | 1004-1104 |
| S93 | MICROSWITCH-NLG WT | 710 | 29-30-00 | 1004-1104 |
| S93 | MICROSWITCH-NLG WT | 710 | 31-20-00 | 1004-1104 |
| S93 | MICROSWITCH-NLG WT | 710 | 32-30-00 | 1004-1104 |
| S93 | MICROSWITCH-NLG WT | 710 | 32-51-00 | 1004-1104 |
| S93 | MICROSWITCH-NLG WT | 710 | 32-60-00 | 1004-1104 |
| S93 | MICROSWITCH-NLG WT | 710 | 34-12-00 | 1004-1104 |
| S93 | MICROSWITCH-NLG WT | 710 | 34-27-00 | 1004-1104 |
| S94 | MICROSWITCH-PWR LVR R | 213 | 21-31-00 | 1004-1104 |
| S94 | MICROSWITCH-PWR LVR R | SEE E38 | 21-31-00 | 1004-1104 |
| S94 | MICROSWITCH-PWR LVR R | 213 | 29-10-00 | 1004-1104 |
| S94 | MICROSWITCH-PWR LVR R | SEE E38 | 29-10-00 | 1004-1104 |
| S94 | MICROSWITCH-PWR LVR R | 213 | 29-30-00 | 1004-1104 |
| S94 | MICROSWITCH-PWR LVR R | SEE E38 | 29-30-00 | 1004-1104 |
| S94 | MICROSWITCH-PWR LVR R | 213 | 31-18-00 | 1004-1104 |
| S94 | MICROSWITCH-PWR LVR R | SEE E38 | 31-18-00 | 1004-1104 |
| S94 | MICROSWITCH-PWR LVR R | 213 | 32-30-00 | 1004-1104 |
| S94 | MICROSWITCH-PWR LVR R | SEE E38 | 32-30-00 | 1004-1104 |
| S94 | MICROSWITCH-PWR LVR R | 213 | 32-60-00 | 1004-1104 |
| S94 | MICROSWITCH-PWR LVR R | SEE E38 | 32-60-00 | 1004-1104 |
| S94 | MICROSWITCH-PWR LVR R | 213 | 61-20-00 | 1004-1104 |
| S94 | MICROSWITCH-PWR LVR R | SEE E38 | 61-20-00 | 1004-1104 |
| S95 | MICROSWITCH-PWR LVR L | 213 | 21-31-00 | 1004-1104 |
| S95 | MICROSWITCH-PWR LVR L | SEE E38 | 21-31-00 | 1004-1104 |
| S95 | MICROSWITCH-PWR LVR L | 213 | 27-50-00 | 1004-1104 |
| S95 | MICROSWITCH-PWR LVR L | SEE E38 | 27-50-00 | 1004-1104 |
| S95 | MICROSWITCH-PWR LVR L | 213 | 29-10-00 | 1004-1104 |
| S95 | MICROSWITCH-PWR LVR L | SEE E38 | 29-10-00 | 1004-1104 |
| S95 | MICROSWITCH-PWR LVR L | 213 | 29-30-00 | 1004-1104 |
| S95 | MICROSWITCH-PWR LVR L | SEE E38 | 29-30-00 | 1004-1104 |
| S95 | MICROSWITCH-PWR LVR L | 213 | 31-18-00 | 1004-1104 |
| S95 | MICROSWITCH-PWR LVR L | SEE E38 | 31-18-00 | 1004-1104 |
| S95 | MICROSWITCH-PWR LVR L | 213 | 32-30-00 | 1004-1104 |
| S95 | MICROSWITCH-PWR LVR L | SEE E38 | 32-30-00 | 1004-1104 |

| CODE | NOMENCLATURE | LOCATION | MANUAL REF | EFF. |
|---|---|---|---|---|
| S95 | MICROSWITCH-PWR LVR L | 213 | 32-60-00 | 1004-1104 |
| S95 | MICROSWITCH-PWR LVR L | SEE E38 | 32-60-00 | 1004-1104 |
| S95 | MICROSWITCH-PWR LVR L | 213 | 61-20-00 | 1004-1104 |
| S95 | MICROSWITCH-PWR LVR L | SEE E38 | 61-20-00 | 1004-1104 |
| S97 | SWITCH-PRESSURE | 410 | 73-30-00 | 1004-1104 |
| S98 | SWITCH-PRESSURE | 420 | 73-30-00 | 1004-1104 |
| S99 | SWITCH-TEMP | 232 | 21-10-00 | 1004-1104 |
| S99 | SWITCH-TEMP | 272 | 21-10-00 | 1004-1104 |
| S99 | SWITCH-TEMP | 232 | 21-20-00 | 1004-1104 |
| S99 | SWITCH-TEMP | 272 | 21-20-00 | 1004-1104 |
| S99 | SWITCH-TEMP | 232 | 21-40-00 | 1004-1104 |
| S99 | SWITCH-TEMP | 272 | 21-40-00 | 1004-1104 |
| SP10 | SPLICE | AR | 28-41-00 | 1004-1104 |
| SP1000 | SOLDER SLEEVE | AR | 34-43-00 | 1004-1104 |
| SP1001 | SOLDER SLEEVE | AR | 34-23-00 | 1004-1104 |
| SP1001 | SOLDER SLEEVE | AR | 34-43-00 | 1004-1104 |
| SP1002 | SOLDER SLEEVE | AR | 34-23-00 | 1004-1104 |
| SP1003 | SOLDER SLEEVE | AR | 34-23-00 | 1004-1104 |
| SP1004 | SOLDER SLEEVE | AR | 34-23-00 | 1004-1104 |
| SP1005 | SOLDER SLEEVE | AR | 34-23-00 | 1004-1104 |
| SP1006 | SOLDER SLEEVE | AR | 34-23-00 | 1004-1104 |
| SP1007 | SOLDER SLEEVE | AR | 34-23-00 | 1004-1104 |
| SP1008 | SOLDER SLEEVE | AR | 34-23-00 | 1004-1104 |
| SP1009 | SOLDER SLEEVE | AR | 34-23-00 | 1004-1104 |
| SP1010 | SOLDER SLEEVE | AR | 34-23-00 | 1004-1104 |
| SP1011 | SOLDER SLEEVE | AR | 34-23-00 | 1004-1104 |
| SP1012 | SOLDER SLEEVE | AR | 34-23-00 | 1004-1104 |
| SP1013 | SOLDER SLEEVE | AR | 34-23-00 | 1004-1104 |
| SP1014 | SOLDER SLEEVE | AR | 34-23-00 | 1004-1104 |
| SP1015 | SOLDER SLEEVE | AR | 34-23-00 | 1004-1104 |
| SP1016 | SOLDER SLEEVE | AR | 34-23-00 | 1004-1104 |
| SP1017 | SOLDER SLEEVE | AR | 34-23-00 | 1004-1104 |
| SP1018 | SPLICE | AR | 27-32-00 | 1004-1104 |
| SP1019 | SOLDER SLEEVE | AR | 34-24-00 | 1004-1104 |
| SP1020 | SOLDER SLEEVE | AR | 34-24-00 | 1004-1104 |
| SP1021 | SOLDER SLEEVE | AR | 34-24-00 | 1004-1104 |
| SP1022 | SOLDER SLEEVE | AR | 34-24-00 | 1004-1104 |
| SP1023 | SOLDER SLEEVE | AR | 34-24-00 | 1004-1104 |
| SP1024 | SOLDER SLEEVE | AR | 34-24-00 | 1004-1104 |
| SP1025 | SOLDER SLEEVE | AR | 34-24-00 | 1004-1104 |
| SP1026 | SOLDER SLEEVE | AR | 34-23-00 | 1004-1104 |

| CODE | NOMENCLATURE | LOCATION | MANUAL REF | EFF. |
|---|---|---|---|---|
| SP1027 | SOLDER SLEEVE | AR | 34-23-00 | 1004-1104 |
| SP1028 | SOLDER SLEEVE | AR | 34-23-00 | 1004-1104 |
| SP1029 | SOLDER SLEEVE | AR | 34-23-00 | 1004-1104 |
| SP1030 | SOLDER SLEEVE | AR | 34-23-00 | 1004-1104 |
| SP1031 | SOLDER SLEEVE | AR | 34-23-00 | 1004-1104 |
| SP1032 | SOLDER SLEEVE | AR | 34-23-00 | 1004-1104 |
| SP1033 | SOLDER SLEEVE | AR | 34-23-00 | 1004-1104 |
| SP1034 | SOLDER SLEEVE | AR | 34-23-00 | 1004-1104 |
| SP1035 | SOLDER SLEEVE | AR | 34-23-00 | 1004-1104 |
| SP1036 | SOLDER SLEEVE | AR | 34-23-00 | 1004-1104 |
| SP1037 | SOLDER SLEEVE | AR | 34-23-00 | 1004-1104 |
| SP1038 | SOLDER SLEEVE | AR | 34-23-00 | 1004-1104 |
| SP1039 | SOLDER SLEEVE | AR | 34-23-00 | 1004-1104 |
| SP1040 | SOLDER SLEEVE | AR | 34-23-00 | 1004-1104 |
| SP1041 | SOLDER SLEEVE | AR | 34-23-00 | 1004-1104 |
| SP1042 | SOLDER SLEEVE | AR | 34-23-00 | 1004-1104 |
| SP1043 | SOLDER SLEEVE | AR | 34-23-00 | 1004-1104 |
| SP1044 | SOLDER SLEEVE | AR | 34-23-00 | 1004-1104 |
| SP1045 | SOLDER SLEEVE | AR | 34-24-00 | 1004-1104 |
| SP1046 | SOLDER SLEEVE | AR | 34-24-00 | 1004-1104 |
| SP1047 | SOLDER SLEEVE | AR | 34-42-00 | 1004-1104 |
| SP1048 | SPLICE | AR | 34-43-00 | 1004-1104 |
| SP1049 | SPLICE | AR | 34-43-00 | 1004-1104 |
| SP105 | SPLICE | AR | 30-30-00 | 1004-1104 |
| SP105 | SPLICE | AR | 30-32-00 | 1004-1104 |
| SP1050 | SOLDER SLEEVE | AR | 21-22-00 | 1004-1104 |
| SP1051 | SOLDER SLEEVE | AR | 21-22-00 | 1004-1104 |
| SP1052 | SOLDER SLEEVE | AR | 21-22-00 | 1004-1104 |
| SP1053 | SOLDER SLEEVE | AR | 34-42-00 | 1004-1104 |
| SP1054 | SPLICE | AR | 34-23-00 | 1004-1104 |
| SP1055 | SPLICE | AR | 34-23-00 | 1004-1104 |
| SP1056 | SPLICE | AR | 34-43-00 | 1004-1104 |
| SP1056 | SPLICE | AR | 34-54-40 | 1004-1104 |
| SP1057 | SPLICE | AR | 34-43-00 | 1004-1104 |
| SP1057 | SPLICE | AR | 34-54-40 | 1004-1104 |
| SP1058 | SPLICE | AR | 34-43-00 | 1004-1104 |
| SP1058 | SPLICE | AR | 34-54-40 | 1004-1104 |
| SP1059 | SPLICE | AR | 34-43-00 | 1004-1104 |
| SP1059 | SPLICE | AR | 34-54-40 | 1004-1104 |
| SP106 | SPLICE | AR | 30-30-00 | 1004-1104 |
| SP1060 | SPLICE | AR | 34-43-00 | 1004-1104 |

| CODE | NOMENCLATURE | LOCATION | MANUAL REF | EFF. |
|---|---|---|---|---|
| SP1060 | SPLICE | AR | 34-54-40 | 1004-1104 |
| SP1061 | SOLDER SLEEVE | AR | 22-10-00 | 1004-1104 |
| SP1062 | SOLDER SLEEVE | AR | 22-10-00 | 1004-1104 |
| SP1063 | SOLDER SLEEVE | AR | 22-10-00 | 1004-1104 |
| SP1064 | SOLDER SLEEVE | AR | 22-10-00 | 1004-1104 |
| SP1065 | SOLDER SLEEVE | AR | 22-10-00 | 1004-1104 |
| SP1066 | SOLDER SLEEVE | AR | 22-10-00 | 1004-1104 |
| SP1067 | SOLDER SLEEVE | AR | 22-10-00 | 1004-1104 |
| SP1068 | SOLDER SLEEVE | AR | 22-10-00 | 1004-1104 |
| SP1069 | SOLDER SLEEVE | AR | 27-00-00 | 1004-1104 |
| SP107 | SPLICE | AR | 30-30-00 | 1004-1104 |
| SP107 | SPLICE | AR | 30-32-00 | 1004-1104 |
| SP1070 | SOLDER SLEEVE | AR | 27-00-00 | 1004-1104 |
| SP1071 | SPLICE | AR | 34-43-00 | 1004-1104 |
| SP1072 | SPLICE | AR | 34-43-00 | 1004-1104 |
| SP1073 | SPLICE | AR | 24-63-00 | 1004-1104 |
| SP1074 | SPLICE | AR | 34-43-00 | 1004-1104 |
| SP1074 | SPLICE | AR | 34-54-40 | 1004-1104 |
| SP1075 | SPLICE | AR | 34-43-00 | 1004-1104 |
| SP1075 | SPLICE | AR | 34-54-40 | 1004-1104 |
| SP1076 | SPLICE | AR | 34-43-00 | 1004-1104 |
| SP1076 | SPLICE | AR | 34-54-40 | 1004-1104 |
| SP1077 | SPLICE | AR | 34-43-00 | 1004-1104 |
| SP1077 | SPLICE | AR | 34-54-40 | 1004-1104 |
| SP1078 | SPLICE | AR | 34-43-00 | 1004-1104 |
| SP1078 | SPLICE | AR | 34-54-40 | 1004-1104 |
| SP1079 | SOLDER SLEEVE | AR | 34-44-00 | 1004-1104 |
| SP108 | SPLICE | AR | 30-30-00 | 1004-1104 |
| SP1080 | SOLDER SLEEVE | AR | 34-44-00 | 1004-1104 |
| SP1084 | SOLDER SLEEVE | AR | 34-51-00 | 1004-1104 |
| SP1085 | SOLDER SLEEVE | AR | 34-51-00 | 1004-1104 |
| SP1086 | SOLDER SLEEVE | AR | 34-51-00 | 1004-1104 |
| SP1087 | SOLDER SLEEVE | AR | 34-51-00 | 1004-1104 |
| SP1088 | SOLDER SLEEVE | AR | 34-54-00 | 1004-1104 |
| SP1088 | SOLDER SLEEVE | AR | 34-54-20 | 1004-1104 |
| SP1088 | SOLDER SLEEVE | AR | 34-54-21 | 1004-1104 |
| SP1089 | SOLDER SLEEVE | AR | 34-54-00 | 1004-1104 |
| SP1089 | SOLDER SLEEVE | AR | 34-54-20 | 1004-1104 |
| SP1089 | SOLDER SLEEVE | AR | 34-54-21 | 1004-1104 |
| SP109 | SPLICE | AR | 30-30-00 | 1004-1104 |
| SP1090 | SOLDER SLEEVE | AR | 34-41-00 | 1004-1104 |

| CODE | NOMENCLATURE | LOCATION | MANUAL REF | EFF. |
|---|---|---|---|---|
| SP1091 | SOLDER SLEEVE | AR | 34-41-00 | 1004-1104 |
| SP1092 | SOLDER SLEEVE | AR | 34-21-00 | 1004-1104 |
| SP1092 | SOLDER SLEEVE | AR | 34-22-00 | 1004-1104 |
| SP1092 | SOLDER SLEEVE | AR | 34-28-00 | 1004-1104 |
| SP1093 | SOLDER SLEEVE | AR | 34-21-00 | 1004-1104 |
| SP1093 | SOLDER SLEEVE | AR | 34-22-00 | 1004-1104 |
| SP1093 | SOLDER SLEEVE | AR | 34-28-00 | 1004-1104 |
| SP1094 | SOLDER SLEEVE | AR | 34-21-00 | 1004-1104 |
| SP1094 | SOLDER SLEEVE | AR | 34-22-00 | 1004-1104 |
| SP1095 | SOLDER SLEEVE | AR | 34-21-00 | 1004-1104 |
| SP1095 | SOLDER SLEEVE | AR | 34-22-00 | 1004-1104 |
| SP1095 | SOLDER SLEEVE | AR | 34-28-00 | 1004-1104 |
| SP1096 | SOLDER SLEEVE | AR | 34-21-00 | 1004-1104 |
| SP1096 | SOLDER SLEEVE | AR | 34-22-00 | 1004-1104 |
| SP1096 | SOLDER SLEEVE | AR | 34-28-00 | 1004-1104 |
| SP1097 | SOLDER SLEEVE | AR | 34-12-00 | 1004-1104 |
| SP1098 | SOLDER SLEEVE | AR | 34-12-00 | 1004-1104 |
| SP1099 | SOLDER SLEEVE | AR | 34-12-00 | 1004-1104 |
| SP11 | SPLICE | AR | 28-41-00 | 1004-1104 |
| SP110 | SPLICE | AR | 30-30-00 | 1004-1104 |
| SP1100 | SOLDER SLEEVE | AR | 34-12-00 | 1004-1104 |
| SP1101 | SOLDER SLEEVE | AR | 34-12-00 | 1004-1104 |
| SP1102 | SOLDER SLEEVE | AR | 34-12-00 | 1004-1104 |
| SP1103 | SOLDER SLEEVE | AR | 34-12-00 | 1004-1104 |
| SP1108 | SOLDER SLEEVE | AR | 34-51-00 | 1004-1104 |
| SP1109 | SOLDER SLEEVE | AR | 34-51-00 | 1004-1104 |
| SP111 | SPLICE | AR | 30-30-00 | 1004-1104 |
| SP1110 | SOLDER SLEEVE | AR | 34-51-00 | 1004-1104 |
| SP1111 | SOLDER SLEEVE | AR | 34-51-00 | 1004-1104 |
| SP1112 | SOLDER SLEEVE | AR | 34-51-00 | 1004-1104 |
| SP1113 | SOLDER SLEEVE | AR | 34-54-00 | 1004-1104 |
| SP1113 | SOLDER SLEEVE | AR | 34-54-20 | 1004-1104 |
| SP1113 | SOLDER SLEEVE | AR | 34-54-21 | 1004-1104 |
| SP1114 | SOLDER SLEEVE | AR | 34-52-00 | 1004-1104 |
| SP1114 | SOLDER SLEEVE | AR | 34-54-00 | 1004-1104 |
| SP1114 | SOLDER SLEEVE | AR | 34-54-20 | 1004-1104 |
| SP1114 | SOLDER SLEEVE | AR | 34-54-21 | 1004-1104 |
| SP1115 | SOLDER SLEEVE | AR | 34-52-00 | 1004-1104 |
| SP1116 | SOLDER SLEEVE | AR | 34-41-00 | 1004-1104 |
| SP1117 | SOLDER SLEEVE | AR | 34-41-00 | 1004-1104 |
| SP1117 | SOLDER SLEEVE | AR | 34-44-00 | 1004-1104 |

| CODE | NOMENCLATURE | LOCATION | MANUAL REF | EFF. |
|---|---|---|---|---|
| SP1118 | SPLICE | AR | 34-44-00 | 1004-1104 |
| SP1119 | SOLDER SLEEVE | AR | 34-21-00 | 1004-1104 |
| SP1119 | SOLDER SLEEVE | AR | 34-22-00 | 1004-1104 |
| SP1119 | SOLDER SLEEVE | AR | 34-28-00 | 1004-1104 |
| SP112 | SPLICE | AR | 30-30-00 | 1004-1104 |
| SP1120 | SOLDER SLEEVE | AR | 34-21-00 | 1004-1104 |
| SP1120 | SOLDER SLEEVE | AR | 34-22-00 | 1004-1104 |
| SP1120 | SOLDER SLEEVE | AR | 34-28-00 | 1004-1104 |
| SP1122 | SOLDER SLEEVE | AR | 34-21-00 | 1004-1104 |
| SP1122 | SOLDER SLEEVE | AR | 34-22-00 | 1004-1104 |
| SP1123 | SOLDER SLEEVE | AR | 34-21-00 | 1004-1104 |
| SP1123 | SOLDER SLEEVE | AR | 34-22-00 | 1004-1104 |
| SP1124 | SOLDER SLEEVE | AR | 34-12-00 | 1004-1104 |
| SP1125 | SOLDER SLEEVE | AR | 34-12-00 | 1004-1104 |
| SP1126 | SOLDER SLEEVE | AR | 34-12-00 | 1004-1104 |
| SP1127 | SOLDER SLEEVE | AR | 34-12-00 | 1004-1104 |
| SP1128 | SOLDER SLEEVE | AR | 34-12-00 | 1004-1104 |
| SP1129 | SOLDER SLEEVE | AR | 34-12-00 | 1004-1104 |
| SP1130 | SOLDER SLEEVE | AR | 34-12-00 | 1004-1104 |
| SP1131 | SOLDER SLEEVE | AR | 34-12-00 | 1004-1104 |
| SP1132 | SOLDER SLEEVE | AR | 34-12-00 | 1004-1104 |
| SP1133 | SOLDER SLEEVE | AR | 34-12-00 | 1004-1104 |
| SP1134 | SPLICE | AR | 34-43-00 | 1004-1104 |
| SP1135 | SPLICE | AR | 34-43-00 | 1004-1104 |
| SP1136 | SPLICE | AR | 34-43-00 | 1004-1104 |
| SP1137 | SPLICE | AR | 34-43-00 | 1004-1104 |
| SP1138 | SPLICE | AR | 34-43-00 | 1004-1104 |
| SP1139 | SPLICE | AR | 34-43-00 | 1004-1104 |
| SP1140 | SPLICE | AR | 34-59-20 | 1004-1104 |
| SP1141 | SPLICE | AR | 34-59-20 | 1004-1104 |
| SP1141 | SPLICE | AR | 34-59-80 | 1004-1104 |
| SP1142 | SPLICE | AR | 34-59-20 | 1004-1104 |
| SP1142 | SPLICE | AR | 34-59-80 | 1004-1104 |
| SP1143 | SPLICE | AR | 34-59-20 | 1004-1104 |
| SP115 | SPLICE | AR | 34-43-00 | 1004-1104 |
| SP1153 | SOLDER SLEEVE | AR | 34-52-00 | 1004-1104 |
| SP1154 | SOLDER SLEEVE | AR | 34-52-00 | 1004-1104 |
| SP1155 | SOLDER SLEEVE | AR | 34-52-00 | 1004-1104 |
| SP1156 | SOLDER SLEEVE | AR | 34-53-00 | 1004-1104 |
| SP1157 | SOLDER SLEEVE | AR | 34-53-00 | 1004-1104 |
| SP1158 | SOLDER SLEEVE | AR | 34-53-00 | 1004-1104 |

| CODE | NOMENCLATURE | LOCATION | MANUAL REF | EFF. |
|---|---|---|---|---|
| SP1159 | SOLDER SLEEVE | AR | 34-53-00 | 1004-1104 |
| SP1159 | SOLDER SLEEVE | AR | 34-55-00 | 1004-1104 |
| SP116 | SPLICE | AR | 27-00-00 | 1004-1104 |
| SP1160 | SOLDER SLEEVE | AR | 34-21-00 | 1004-1104 |
| SP1160 | SOLDER SLEEVE | AR | 34-22-00 | 1004-1104 |
| SP1160 | SOLDER SLEEVE | AR | 34-28-00 | 1004-1104 |
| SP1161 | SOLDER SLEEVE | AR | 34-21-00 | 1004-1104 |
| SP1161 | SOLDER SLEEVE | AR | 34-22-00 | 1004-1104 |
| SP1161 | SOLDER SLEEVE | AR | 34-28-00 | 1004-1104 |
| SP1162 | SOLDER SLEEVE | AR | 34-21-00 | 1004-1104 |
| SP1162 | SOLDER SLEEVE | AR | 34-22-00 | 1004-1104 |
| SP1162 | SOLDER SLEEVE | AR | 34-28-00 | 1004-1104 |
| SP1163 | SOLDER SLEEVE | AR | 34-21-00 | 1004-1104 |
| SP1163 | SOLDER SLEEVE | AR | 34-22-00 | 1004-1104 |
| SP1163 | SOLDER SLEEVE | AR | 34-28-00 | 1004-1104 |
| SP1167 | SOLDER SLEEVE | AR | 34-52-00 | 1004-1104 |
| SP1168 | SOLDER SLEEVE | AR | 34-52-00 | 1004-1104 |
| SP1169 | SOLDER SLEEVE | AR | 34-52-00 | 1004-1104 |
| SP117 | SPLICE | AR | 27-00-00 | 1004-1104 |
| SP1170 | SOLDER SLEEVE | AR | 34-53-00 | 1004-1104 |
| SP1171 | SOLDER SLEEVE | AR | 34-53-00 | 1004-1104 |
| SP1172 | SOLDER SLEEVE | AR | 34-53-00 | 1004-1104 |
| SP1173 | SOLDER SLEEVE | AR | 34-53-00 | 1004-1104 |
| SP1174 | SOLDER SLEEVE | AR | 34-53-00 | 1004-1104 |
| SP1175 | SOLDER SLEEVE | AR | 34-53-00 | 1004-1104 |
| SP1175 | SOLDER SLEEVE | AR | 34-55-00 | 1004-1104 |
| SP1176 | SOLDER SLEEVE | AR | 34-53-00 | 1004-1104 |
| SP1176 | SOLDER SLEEVE | AR | 34-55-00 | 1004-1104 |
| SP1177 | SOLDER SLEEVE | AR | 34-21-00 | 1004-1104 |
| SP1177 | SOLDER SLEEVE | AR | 34-22-00 | 1004-1104 |
| SP1178 | SOLDER SLEEVE | AR | 34-21-00 | 1004-1104 |
| SP1178 | SOLDER SLEEVE | AR | 34-22-00 | 1004-1104 |
| SP1178 | SOLDER SLEEVE | AR | 34-28-00 | 1004-1104 |
| SP1179 | SOLDER SLEEVE | AR | 34-21-00 | 1004-1104 |
| SP1179 | SOLDER SLEEVE | AR | 34-22-00 | 1004-1104 |
| SP1179 | SOLDER SLEEVE | AR | 34-28-00 | 1004-1104 |
| SP119 | SPLICE | AR | 21-31-00 | 1004-1104 |
| SP1191 | SOLDER SLEEVE | AR | 23-50-00 | 1004-1104 |
| SP1192 | SOLDER SLEEVE | AR | 23-50-00 | 1004-1104 |
| SP1193 | SOLDER SLEEVE | AR | 23-50-00 | 1004-1104 |
| SP1194 | SOLDER SLEEVE | AR | 23-50-00 | 1004-1104 |

| CODE | NOMENCLATURE | LOCATION | MANUAL REF | EFF. |
|---|---|---|---|---|
| SP1195 | SOLDER SLEEVE | AR | 23-50-00 | 1004-1104 |
| SP1196 | SOLDER SLEEVE | AR | 23-50-00 | 1004-1104 |
| SP1197 | SOLDER SLEEVE | AR | 23-50-00 | 1004-1104 |
| SP1198 | SOLDER SLEEVE | AR | 23-50-00 | 1004-1104 |
| SP1199 | SOLDER SLEEVE | AR | 23-50-00 | 1004-1104 |
| SP12 | SPLICE | AR | 28-41-00 | 1004-1104 |
| SP120 | SPLICE | AR | 30-31-00 | 1004-1104 |
| SP1200 | SOLDER SLEEVE | AR | 23-50-00 | 1004-1104 |
| SP1201 | SOLDER SLEEVE | AR | 23-50-00 | 1004-1104 |
| SP1202 | SOLDER SLEEVE | AR | 23-50-00 | 1004-1104 |
| SP1202 | SOLDER SLEEVE | AR | 23-52-00 | 1004-1104 |
| SP1203 | SOLDER SLEEVE | AR | 23-50-00 | 1004-1104 |
| SP1204 | SOLDER SLEEVE | AR | 23-50-00 | 1004-1104 |
| SP1205 | SOLDER SLEEVE | AR | 23-50-00 | 1004-1104 |
| SP1206 | SOLDER SLEEVE | AR | 23-50-00 | 1004-1104 |
| SP1207 | SOLDER SLEEVE | AR | 23-50-00 | 1004-1104 |
| SP1208 | SOLDER SLEEVE | AR | 23-50-00 | 1004-1104 |
| SP1209 | SOLDER SLEEVE | AR | 23-50-00 | 1004-1104 |
| SP121 | SPLICE | AR | 30-31-00 | 1004-1104 |
| SP1210 | SOLDER SLEEVE | AR | 23-50-00 | 1004-1104 |
| SP1211 | SOLDER SLEEVE | AR | 23-50-00 | 1004-1104 |
| SP1211 | SOLDER SLEEVE | AR | 34-21-00 | 1004-1104 |
| SP1211 | SOLDER SLEEVE | AR | 34-22-00 | 1004-1104 |
| SP1211 | SOLDER SLEEVE | AR | 34-28-00 | 1004-1104 |
| SP1212 | SOLDER SLEEVE | AR | 34-21-00 | 1004-1104 |
| SP1212 | SOLDER SLEEVE | AR | 34-22-00 | 1004-1104 |
| SP1212 | SOLDER SLEEVE | AR | 34-28-00 | 1004-1104 |
| SP1213 | SOLDER SLEEVE | AR | 34-21-00 | 1004-1104 |
| SP1213 | SOLDER SLEEVE | AR | 34-22-00 | 1004-1104 |
| SP1213 | SOLDER SLEEVE | AR | 34-28-00 | 1004-1104 |
| SP1214 | SOLDER SLEEVE | AR | 34-21-00 | 1004-1104 |
| SP1214 | SOLDER SLEEVE | AR | 34-22-00 | 1004-1104 |
| SP1214 | SOLDER SLEEVE | AR | 34-28-00 | 1004-1104 |
| SP1215 | SOLDER SLEEVE | AR | 34-21-00 | 1004-1104 |
| SP1215 | SOLDER SLEEVE | AR | 34-22-00 | 1004-1104 |
| SP1215 | SOLDER SLEEVE | AR | 34-28-00 | 1004-1104 |
| SP1216 | SOLDER SLEEVE | AR | 34-21-00 | 1004-1104 |
| SP1216 | SOLDER SLEEVE | AR | 34-22-00 | 1004-1104 |
| SP1216 | SOLDER SLEEVE | AR | 34-28-00 | 1004-1104 |
| SP1217 | SOLDER SLEEVE | AR | 34-21-00 | 1004-1104 |
| SP1217 | SOLDER SLEEVE | AR | 34-22-00 | 1004-1104 |

| CODE | NOMENCLATURE | LOCATION | MANUAL REF | EFF. |
|---|---|---|---|---|
| SP1217 | SOLDER SLEEVE | AR | 34-28-00 | 1004-1104 |
| SP1218 | SOLDER SLEEVE | AR | 34-21-00 | 1004-1104 |
| SP1218 | SOLDER SLEEVE | AR | 34-22-00 | 1004-1104 |
| SP1218 | SOLDER SLEEVE | AR | 34-28-00 | 1004-1104 |
| SP1219 | SOLDER SLEEVE | AR | 23-50-00 | 1004-1104 |
| SP122 | SPLICE | AR | 30-31-00 | 1004-1104 |
| SP1220 | SOLDER SLEEVE | AR | 23-50-00 | 1004-1104 |
| SP1221 | SOLDER SLEEVE | AR | 23-50-00 | 1004-1104 |
| SP1222 | SOLDER SLEEVE | AR | 23-50-00 | 1004-1104 |
| SP1223 | SOLDER SLEEVE | AR | 34-44-00 | 1004-1104 |
| SP1224 | SOLDER SLEEVE | AR | 34-44-00 | 1004-1104 |
| SP1225 | SOLDER SLEEVE | AR | 34-44-00 | 1004-1104 |
| SP1226 | SPLICE | AR | 34-44-00 | 1004-1104 |
| SP1227 | SPLICE | AR | 34-44-00 | 1004-1104 |
| SP1228 | SPLICE | AR | 34-44-00 | 1004-1104 |
| SP1229 | SPLICE | AR | 34-44-00 | 1004-1104 |
| SP123 | SPLICE | AR | 77-11-00 | 1004-1104 |
| SP1230 | SOLDER SLEEVE | AR | 23-50-00 | 1004-1104 |
| SP1231 | SOLDER SLEEVE | AR | 23-50-00 | 1004-1104 |
| SP1232 | SPLICE | AR | 34-44-00 | 1004-1104 |
| SP1233 | SOLDER SLEEVE | AR | 23-50-00 | 1004-1104 |
| SP1234 | SOLDER SLEEVE | AR | 23-50-00 | 1004-1104 |
| SP1235 | SPLICE | AR | 34-44-00 | 1004-1104 |
| SP1236 | SOLDER SLEEVE | AR | 34-12-00 | 1004-1104 |
| SP1237 | SOLDER SLEEVE | AR | 34-12-00 | 1004-1104 |
| SP1238 | SOLDER SLEEVE | AR | 22-10-00 | 1004-1104 |
| SP1239 | SOLDER SLEEVE | AR | 22-10-00 | 1004-1104 |
| SP124 | SPLICE | AR | 77-11-00 | 1004-1104 |
| SP1240 | SOLDER SLEEVE | AR | 34-12-00 | 1004-1104 |
| SP1241 | SPLICE | AR | 27-50-00 | 1004-1104 |
| SP1242 | SPLICE | AR | 27-50-00 | 1004-1104 |
| SP1243 | SPLICE | AR | 21-51-00 | 1004-1104 |
| SP1244 | SPLICE | AR | 21-51-00 | 1004-1104 |
| SP1245 | SPLICE | AR | 21-51-00 | 1004-1104 |
| SP1246 | SOLDER SLEEVE | AR | 34-51-00 | 1004-1104 |
| SP1247 | SOLDER SLEEVE | AR | 34-21-00 | 1004-1104 |
| SP1247 | SOLDER SLEEVE | AR | 34-22-00 | 1004-1104 |
| SP1247 | SOLDER SLEEVE | AR | 34-28-00 | 1004-1104 |
| SP1248 | SOLDER SLEEVE | AR | 34-52-00 | 1004-1104 |
| SP1249 | SOLDER SLEEVE | AR | 34-21-00 | 1004-1104 |
| SP1249 | SOLDER SLEEVE | AR | 34-22-00 | 1004-1104 |

| CODE | NOMENCLATURE | LOCATION | MANUAL REF | EFF. |
|---|---|---|---|---|
| SP1249 | SOLDER SLEEVE | AR | 34-28-00 | 1004-1104 |
| SP1249 | SOLDER SLEEVE | AR | 34-43-00 | 1004-1104 |
| SP125 | SPLICE | AR | 77-11-00 | 1004-1104 |
| SP1250 | SOLDER SLEEVE | AR | 34-24-00 | 1004-1104 |
| SP1251 | SOLDER SLEEVE | AR | 34-24-00 | 1004-1104 |
| SP1252 | SOLDER SLEEVE | AR | 34-44-00 | 1004-1104 |
| SP1253 | SOLDER SLEEVE | AR | 34-44-00 | 1004-1104 |
| SP1254 | SOLDER SLEEVE | AR | 34-44-00 | 1004-1104 |
| SP1255 | SOLDER SLEEVE | AR | 34-44-00 | 1004-1104 |
| SP1256 | SOLDER SLEEVE | AR | 34-44-00 | 1004-1104 |
| SP126 | SPLICE | AR | 77-11-00 | 1004-1104 |
| SP1260 | SOLDER SLEEVE | AR | 34-43-00 | 1004-1104 |
| SP1262 | SOLDER SLEEVE | AR | 22-10-00 | 1004-1104 |
| SP1268 | SOLDER SLEEVE | AR | 34-52-00 | 1004-1104 |
| SP1269 | SOLDER SLEEVE | AR | 34-55-00 | 1004-1104 |
| SP127 | SPLICE | AR | 77-11-00 | 1004-1104 |
| SP1270 | SPLICE | AR | 34-44-00 | 1004-1104 |
| SP1271 | SPLICE | AR | 34-44-00 | 1004-1104 |
| SP1273 | SOLDER SLEEVE | AR | 34-21-00 | 1004-1104 |
| SP1273 | SOLDER SLEEVE | AR | 34-22-00 | 1004-1104 |
| SP1273 | SOLDER SLEEVE | AR | 34-28-00 | 1004-1104 |
| SP1275 | SOLDER SLEEVE | AR | 34-21-00 | 1004-1104 |
| SP1275 | SOLDER SLEEVE | AR | 34-22-00 | 1004-1104 |
| SP1275 | SOLDER SLEEVE | AR | 34-28-00 | 1004-1104 |
| SP1276 | SOLDER SLEEVE | AR | 34-55-00 | 1004-1104 |
| SP1278 | SOLDER SLEEVE | AR | 34-55-00 | 1004-1104 |
| SP1279 | SOLDER SLEEVE | AR | 34-55-00 | 1004-1104 |
| SP128 | SPLICE | AR | 77-11-00 | 1004-1104 |
| SP1281 | SPLICE | AR | 31-12-30 | 1004-1104 |
| SP1282 | SPLICE | AR | 31-12-30 | 1004-1104 |
| SP1283 | SOLDER SLEEVE | AR | 34-21-00 | 1004-1104 |
| SP1283 | SOLDER SLEEVE | AR | 34-22-00 | 1004-1104 |
| SP1283 | SOLDER SLEEVE | AR | 34-28-00 | 1004-1104 |
| SP1284 | SOLDER SLEEVE | AR | 34-23-00 | 1004-1104 |
| SP1285 | SOLDER SLEEVE | AR | 34-23-00 | 1004-1104 |
| SP1287 | SPLICE | AR | 24-61-00 | 1004-1104 |
| SP1288 | SPLICE | AR | 24-61-00 | 1004-1104 |
| SP1289 | SOLDER SLEEVE | AR | 34-23-00 | 1004-1104 |
| SP129 | SPLICE | AR | 77-11-00 | 1004-1104 |
| SP1290 | SOLDER SLEEVE | AR | 34-23-00 | 1004-1104 |
| SP1291 | SOLDER SLEEVE | AR | 34-23-00 | 1004-1104 |

| CODE | NOMENCLATURE | LOCATION | MANUAL REF | EFF. |
|---|---|---|---|---|
| SP1292 | SOLDER SLEEVE | AR | 34-23-00 | 1004-1104 |
| SP1293 | SOLDER SLEEVE | AR | 34-23-00 | 1004-1104 |
| SP1294 | SOLDER SLEEVE | AR | 34-23-00 | 1004-1104 |
| SP1295 | SOLDER SLEEVE | AR | 34-23-00 | 1004-1104 |
| SP1296 | SOLDER SLEEVE | AR | 34-23-00 | 1004-1104 |
| SP1297 | SOLDER SLEEVE | AR | 34-23-00 | 1004-1104 |
| SP1298 | SOLDER SLEEVE | AR | 34-23-00 | 1004-1104 |
| SP1299 | SOLDER SLEEVE | AR | 34-23-00 | 1004-1104 |
| SP13 | SPLICE | AR | 28-41-00 | 1004-1104 |
| SP130 | SPLICE | AR | 77-11-00 | 1004-1104 |
| SP1300 | SPLICE | AR | 31-12-50 | 1004-1104 |
| SP1301 | SPLICE | AR | 31-12-50 | 1004-1104 |
| SP1302 | SOLDER SLEEVE | AR | 34-23-00 | 1004-1104 |
| SP1303 | SPLICE | AR | 31-12-60 | 1004-1104 |
| SP1304 | SPLICE | AR | 31-12-60 | 1004-1104 |
| SP1305 | SPLICE | AR | 27-00-00 | 1004-1104 |
| SP1308 | SPLICE | AR | 27-00-00 | 1004-1104 |
| SP1309 | SOLDER SLEEVE | AR | 34-42-00 | 1004-1104 |
| SP1310 | SOLDER SLEEVE | AR | 34-42-00 | 1004-1104 |
| SP1311 | SOLDER SLEEVE | AR | 34-42-00 | 1004-1104 |
| SP1312 | SOLDER SLEEVE | AR | 34-42-00 | 1004-1104 |
| SP1313 | SOLDER SLEEVE | AR | 34-42-00 | 1004-1104 |
| SP1314 | SOLDER SLEEVE | AR | 34-42-00 | 1004-1104 |
| SP1315 | SOLDER SLEEVE | AR | 34-23-00 | 1004-1104 |
| SP1316 | SPLICE | AR | 61-21-00 | 1004-1104 |
| SP1317 | SPLICE | AR | 61-21-00 | 1004-1104 |
| SP1318 | SPLICE | AR | 61-21-00 | 1004-1104 |
| SP1319 | SPLICE | AR | 61-21-00 | 1004-1104 |
| SP1320 | SPLICE | AR | 61-21-00 | 1004-1104 |
| SP1321 | SPLICE | AR | 61-21-00 | 1004-1104 |
| SP1322 | SPLICE | AR | 32-43-00 | 1004-1104 |
| SP1323 | SPLICE | AR | 32-43-00 | 1004-1104 |
| SP1324 | SPLICE | AR | 32-43-00 | 1004-1104 |
| SP1325 | SOLDER SLEEVE | AR | 34-23-00 | 1004-1104 |
| SP1326 | SPLICE | AR | 23-13-20 | 1004-1104 |
| SP1327 | SPLICE | AR | 23-13-20 | 1004-1104 |
| SP1328 | SOLDER SLEEVE | AR | 23-13-10 | 1004-1104 |
| SP1329 | SOLDER SLEEVE | AR | 23-13-20 | 1004-1104 |
| SP1331 | SOLDER SLEEVE | AR | 23-13-20 | 1004-1104 |
| SP1332 | SOLDER SLEEVE | AR | 23-13-20 | 1004-1104 |
| SP1333 | SOLDER SLEEVE | AR | 23-13-20 | 1004-1104 |

| CODE | NOMENCLATURE | LOCATION | MANUAL REF | EFF. |
|---|---|---|---|---|
| SP1334 | SOLDER SLEEVE | AR | 23-13-20 | 1004-1104 |
| SP1335 | SOLDER SLEEVE | AR | 23-13-20 | 1004-1104 |
| SP1336 | SOLDER SLEEVE | AR | 23-13-20 | 1004-1104 |
| SP1338 | SOLDER SLEEVE | AR | 23-13-20 | 1004-1104 |
| SP1339 | SPLICE | AR | 23-13-20 | 1004-1104 |
| SP1340 | SPLICE | AR | 23-13-20 | 1004-1104 |
| SP1341 | SPLICE | AR | 34-59-90 | 1004-1104 |
| SP1357 | SOLDER SLEEVE | AR | 34-55-00 | 1004-1104 |
| SP1358 | SOLDER SLEEVE | AR | 34-55-00 | 1004-1104 |
| SP1359 | SOLDER SLEEVE | AR | 34-55-00 | 1004-1104 |
| SP1360 | SOLDER SLEEVE | AR | 34-44-00 | 1004-1104 |
| SP1361 | SOLDER SLEEVE | AR | 34-55-00 | 1004-1104 |
| SP1362 | SOLDER SLEEVE | AR | 34-55-00 | 1004-1104 |
| SP1363 | SOLDER SLEEVE | AR | 34-44-00 | 1004-1104 |
| SP1364 | SOLDER SLEEVE | AR | 34-44-00 | 1004-1104 |
| SP1366 | SPLICE | AR | 34-44-00 | 1004-1104 |
| SP1367 | SPLICE | AR | 34-44-00 | 1004-1104 |
| SP1368 | SOLDER SLEEVE | AR | 34-44-00 | 1004-1104 |
| SP1369 | SOLDER SLEEVE | AR | 34-44-00 | 1004-1104 |
| SP1370 | SOLDER SLEEVE | AR | 34-55-00 | 1004-1104 |
| SP1371 | SOLDER SLEEVE | AR | 34-55-00 | 1004-1104 |
| SP1375 | SOLDER SLEEVE | AR | 34-55-00 | 1004-1104 |
| SP1376 | SOLDER SLEEVE | AR | 34-55-00 | 1004-1104 |
| SP1378 | SOLDER SLEEVE | AR | 34-55-00 | 1004-1104 |
| SP1379 | SOLDER SLEEVE | AR | 34-55-00 | 1004-1104 |
| SP1382 | SOLDER SLEEVE | AR | 34-55-00 | 1004-1104 |
| SP1383 | SOLDER SLEEVE | AR | 34-55-00 | 1004-1104 |
| SP1384 | SOLDER SLEEVE | AR | 34-55-00 | 1004-1104 |
| SP1385 | SOLDER SLEEVE | AR | 34-55-00 | 1004-1104 |
| SP1386 | SOLDER SLEEVE | AR | 34-55-00 | 1004-1104 |
| SP1387 | SOLDER SLEEVE | AR | 34-55-00 | 1004-1104 |
| SP1388 | SOLDER SLEEVE | AR | 34-55-00 | 1004-1104 |
| SP1399 | SOLDER SLEEVE | AR | 34-42-00 | 1004-1104 |
| SP14 | SPLICE | AR | 28-41-00 | 1004-1104 |
| SP1400 | SOLDER SLEEVE | AR | 34-42-00 | 1004-1104 |
| SP1409 | SPLICE | AR | 52-70-00 | 1004-1104 |
| SP1410 | SPLICE | AR | 52-70-00 | 1004-1104 |
| SP1411 | SPLICE | AR | 52-70-00 | 1004-1104 |
| SP1412 | SOLDER SLEEVE | AR | 34-57-00 | 1004-1104 |
| SP1413 | SOLDER SLEEVE | AR | 34-57-00 | 1004-1104 |
| SP1414 | SOLDER SLEEVE | AR | 34-57-00 | 1004-1104 |

| CODE | NOMENCLATURE | LOCATION | MANUAL REF | EFF. |
|---|---|---|---|---|
| SP1415 | SOLDER SLEEVE | AR | 34-57-00 | 1004-1104 |
| SP1416 | SOLDER SLEEVE | AR | 34-57-00 | 1004-1104 |
| SP1417 | SOLDER SLEEVE | AR | 34-57-00 | 1004-1104 |
| SP1418 | SOLDER SLEEVE | AR | 34-57-00 | 1004-1104 |
| SP1419 | SOLDER SLEEVE | AR | 34-57-00 | 1004-1104 |
| SP1420 | SOLDER SLEEVE | AR | 34-57-00 | 1004-1104 |
| SP1421 | SOLDER SLEEVE | AR | 34-57-00 | 1004-1104 |
| SP1422 | SOLDER SLEEVE | AR | 34-57-00 | 1004-1104 |
| SP1423 | SOLDER SLEEVE | AR | 34-57-00 | 1004-1104 |
| SP1424 | SOLDER SLEEVE | AR | 34-57-00 | 1004-1104 |
| SP1425 | SPLICE | AR | 32-43-00 | 1004-1104 |
| SP1426 | SOLDER SLEEVE | AR | 34-57-00 | 1004-1104 |
| SP1427 | SOLDER SLEEVE | AR | 34-56-10 | 1004-1104 |
| SP1428 | SPLICE | AR | 34-56-10 | 1004-1104 |
| SP1429 | SPLICE | AR | 34-56-10 | 1004-1104 |
| SP1430 | SOLDER SLEEVE | AR | 34-56-10 | 1004-1104 |
| SP1431 | SOLDER SLEEVE | AR | 34-56-00 | 1004-1104 |
| SP1432 | SOLDER SLEEVE | AR | 34-56-00 | 1004-1104 |
| SP1433 | SOLDER SLEEVE | AR | 34-56-00 | 1004-1104 |
| SP1434 | SOLDER SLEEVE | AR | 34-56-00 | 1004-1104 |
| SP1435 | SPLICE | AR | 34-56-00 | 1004-1104 |
| SP1436 | SOLDER SLEEVE | AR | 34-56-00 | 1004-1104 |
| SP1437 | SOLDER SLEEVE | AR | 34-56-00 | 1004-1104 |
| SP1438 | SOLDER SLEEVE | AR | 34-56-00 | 1004-1104 |
| SP1439 | SOLDER SLEEVE | AR | 34-56-00 | 1004-1104 |
| SP1440 | SOLDER SLEEVE | AR | 34-56-00 | 1004-1104 |
| SP1441 | SOLDER SLEEVE | AR | 34-56-00 | 1004-1104 |
| SP1442 | SOLDER SLEEVE | AR | 34-56-00 | 1004-1104 |
| SP1443 | SOLDER SLEEVE | AR | 34-56-00 | 1004-1104 |
| SP1444 | SOLDER SLEEVE | AR | 34-56-00 | 1004-1104 |
| SP1445 | SOLDER SLEEVE | AR | 34-56-00 | 1004-1104 |
| SP1446 | SOLDER SLEEVE | AR | 34-56-00 | 1004-1104 |
| SP1447 | SOLDER SLEEVE | AR | 34-56-00 | 1004-1104 |
| SP1448 | SOLDER SLEEVE | AR | 34-56-00 | 1004-1104 |
| SP1449 | SOLDER SLEEVE | AR | 34-56-00 | 1004-1104 |
| SP1450 | SOLDER SLEEVE | AR | 34-56-00 | 1004-1104 |
| SP1451 | SOLDER SLEEVE | AR | 34-56-00 | 1004-1104 |
| SP1452 | SOLDER SLEEVE | AR | 34-56-00 | 1004-1104 |
| SP1453 | SOLDER SLEEVE | AR | 34-56-00 | 1004-1104 |
| SP1454 | SOLDER SLEEVE | AR | 34-56-00 | 1004-1104 |
| SP1455 | SOLDER SLEEVE | AR | 34-56-00 | 1004-1104 |

| CODE | NOMENCLATURE | LOCATION | MANUAL REF | EFF. |
|---|---|---|---|---|
| SP1456 | SOLDER SLEEVE | AR | 34-56-00 | 1004-1104 |
| SP1457 | SOLDER SLEEVE | AR | 34-56-00 | 1004-1104 |
| SP1458 | SOLDER SLEEVE | AR | 34-56-00 | 1004-1104 |
| SP1459 | SOLDER SLEEVE | AR | 34-56-00 | 1004-1104 |
| SP1460 | SOLDER SLEEVE | AR | 34-56-00 | 1004-1104 |
| SP1461 | SOLDER SLEEVE | AR | 34-56-00 | 1004-1104 |
| SP1462 | SOLDER SLEEVE | AR | 34-56-00 | 1004-1104 |
| SP1463 | SOLDER SLEEVE | AR | 34-56-00 | 1004-1104 |
| SP1464 | SOLDER SLEEVE | AR | 34-56-00 | 1004-1104 |
| SP1465 | SOLDER SLEEVE | AR | 34-56-00 | 1004-1104 |
| SP1466 | SOLDER SLEEVE | AR | 34-56-00 | 1004-1104 |
| SP1467 | SOLDER SLEEVE | AR | 34-56-00 | 1004-1104 |
| SP1468 | SOLDER SLEEVE | AR | 34-56-00 | 1004-1104 |
| SP1469 | SOLDER SLEEVE | AR | 34-56-00 | 1004-1104 |
| SP1470 | SOLDER SLEEVE | AR | 34-56-00 | 1004-1104 |
| SP1471 | SOLDER SLEEVE | AR | 34-56-00 | 1004-1104 |
| SP1472 | SOLDER SLEEVE | AR | 34-56-00 | 1004-1104 |
| SP1473 | SOLDER SLEEVE | AR | 34-56-00 | 1004-1104 |
| SP1474 | SOLDER SLEEVE | AR | 34-56-00 | 1004-1104 |
| SP1475 | SOLDER SLEEVE | AR | 34-56-00 | 1004-1104 |
| SP1476 | SOLDER SLEEVE | AR | 34-56-00 | 1004-1104 |
| SP1477 | SOLDER SLEEVE | AR | 34-56-00 | 1004-1104 |
| SP1478 | SOLDER SLEEVE | AR | 34-56-00 | 1004-1104 |
| SP1479 | SOLDER SLEEVE | AR | 34-56-00 | 1004-1104 |
| SP1480 | SOLDER SLEEVE | AR | 34-56-00 | 1004-1104 |
| SP1481 | SOLDER SLEEVE | AR | 34-56-00 | 1004-1104 |
| SP1482 | SOLDER SLEEVE | AR | 34-56-00 | 1004-1104 |
| SP1483 | SOLDER SLEEVE | AR | 34-56-00 | 1004-1104 |
| SP1484 | SOLDER SLEEVE | AR | 34-56-00 | 1004-1104 |
| SP1485 | SOLDER SLEEVE | AR | 34-56-00 | 1004-1104 |
| SP1486 | SOLDER SLEEVE | AR | 34-56-00 | 1004-1104 |
| SP1487 | SOLDER SLEEVE | AR | 34-56-00 | 1004-1104 |
| SP1488 | SOLDER SLEEVE | AR | 34-56-00 | 1004-1104 |
| SP1489 | SOLDER SLEEVE | AR | 34-56-00 | 1004-1104 |
| SP1490 | SOLDER SLEEVE | AR | 34-56-00 | 1004-1104 |
| SP1491 | SOLDER SLEEVE | AR | 34-56-00 | 1004-1104 |
| SP1492 | SOLDER SLEEVE | AR | 34-55-00 | 1004-1104 |
| SP1493 | SOLDER SLEEVE | AR | 34-55-00 | 1004-1104 |
| SP1494 | SOLDER SLEEVE | AR | 34-56-00 | 1004-1104 |
| SP1495 | SOLDER SLEEVE | AR | 34-56-00 | 1004-1104 |
| SP1496 | SOLDER SLEEVE | AR | 34-56-00 | 1004-1104 |

| CODE | NOMENCLATURE | LOCATION | MANUAL REF | EFF. |
|---|---|---|---|---|
| SP1497 | SOLDER SLEEVE | AR | 34-56-00 | 1004-1104 |
| SP1498 | SOLDER SLEEVE | AR | 34-56-00 | 1004-1104 |
| SP1499 | SOLDER SLEEVE | AR | 34-56-00 | 1004-1104 |
| SP15 | SPLICE | AR | 28-41-00 | 1004-1104 |
| SP1500 | SPLICE | AR | 34-53-00 | 1004-1104 |
| SP1501 | SPLICE | AR | 34-55-00 | 1004-1104 |
| SP1502 | SPLICE | AR | 31-50-00 | 1004-1104 |
| SP1503 | SPLICE | AR | 31-50-00 | 1004-1104 |
| SP1504 | SPLICE | AR | 30-80-00 | 1004-1104 |
| SP1504 | SPLICE | AR | 31-19-11 | 1004-1104 |
| SP1505 | SPLICE | AR | 30-80-00 | 1004-1104 |
| SP1505 | SPLICE | AR | 31-19-11 | 1004-1104 |
| SP1506 | SPLICE | AR | 30-80-00 | 1004-1104 |
| SP1506 | SPLICE | AR | 31-19-11 | 1004-1104 |
| SP1532 | SOLDER SLEEVE | AR | 21-10-00 | 1004-1104 |
| SP1532 | SOLDER SLEEVE | AR | 21-20-00 | 1004-1104 |
| SP1532 | SOLDER SLEEVE | AR | 21-40-00 | 1004-1104 |
| SP1533 | SOLDER SLEEVE | AR | 21-10-00 | 1004-1104 |
| SP1533 | SOLDER SLEEVE | AR | 21-20-00 | 1004-1104 |
| SP1533 | SOLDER SLEEVE | AR | 21-40-00 | 1004-1104 |
| SP1534 | SOLDER SLEEVE | AR | 21-10-00 | 1004-1104 |
| SP1534 | SOLDER SLEEVE | AR | 21-20-00 | 1004-1104 |
| SP1534 | SOLDER SLEEVE | AR | 21-40-00 | 1004-1104 |
| SP1535 | SPLICE | AR | 31-52-00 | 1004-1104 |
| SP1536 | SPLICE | AR | 30-80-00 | 1004-1104 |
| SP1536 | SPLICE | AR | 31-19-11 | 1004-1104 |
| SP1536 | SPLICE | AR | 31-52-00 | 1004-1104 |
| SP1537 | SPLICE | AR | 31-50-00 | 1004-1104 |
| SP1537 | SPLICE | AR | 31-52-00 | 1004-1104 |
| SP1538 | SPLICE | AR | 31-50-00 | 1004-1104 |
| SP1538 | SPLICE | AR | 31-52-00 | 1004-1104 |
| SP1539 | SPLICE | AR | 31-50-00 | 1004-1104 |
| SP1539 | SPLICE | AR | 31-52-00 | 1004-1104 |
| SP1540 | SOLDER SLEEVE | AR | 34-51-00 | 1004-1104 |
| SP1541 | SOLDER SLEEVE | AR | 34-53-00 | 1004-1104 |
| SP1542 | SPLICE | AR | 61-21-00 | 1004-1104 |
| SP1543 | SPLICE | AR | 61-21-00 | 1004-1104 |
| SP1544 | SPLICE | AR | 61-21-00 | 1004-1104 |
| SP1545 | SPLICE | AR | 61-21-00 | 1004-1104 |
| SP1546 | SPLICE | AR | 61-21-00 | 1004-1104 |
| SP1547 | SPLICE | AR | 61-21-00 | 1004-1104 |

| CODE | NOMENCLATURE | LOCATION | MANUAL REF | EFF. |
|---|---|---|---|---|
| SP1548 | SPLICE | AR | 61-21-00 | 1004-1104 |
| SP1549 | SPLICE | AR | 61-21-00 | 1004-1104 |
| SP1550 | SOLDER SLEEVE | AR | 27-32-00 | 1004-1104 |
| SP1555 | SPLICE | AR | 22-10-00 | 1004-1104 |
| SP1570 | SOLDER SLEEVE | AR | 23-50-00 | 1004-1104 |
| SP1570 | SOLDER SLEEVE | AR | 23-51-00 | 1004-1104 |
| SP1571 | SPLICE | AR | 23-50-00 | 1004-1104 |
| SP1572 | SOLDER SLEEVE | AR | 23-50-00 | 1004-1104 |
| SP1573 | SOLDER SLEEVE | AR | 23-50-00 | 1004-1104 |
| SP1574 | SOLDER SLEEVE | AR | 23-50-00 | 1004-1104 |
| SP1575 | SOLDER SLEEVE | AR | 23-50-00 | 1004-1104 |
| SP1578 | SOLDER SLEEVE | AR | 34-59-10 | 1004-1104 |
| SP1578 | SOLDER SLEEVE | AR | 34-59-20 | 1004-1104 |
| SP1578 | SOLDER SLEEVE | AR | 34-59-30 | 1004-1104 |
| SP1578 | SOLDER SLEEVE | AR | 34-59-40 | 1004-1104 |
| SP1578 | SOLDER SLEEVE | AR | 34-59-60 | 1004-1104 |
| SP1578 | SOLDER SLEEVE | AR | 34-59-70 | 1004-1104 |
| SP1578 | SOLDER SLEEVE | AR | 34-59-80 | 1004-1104 |
| SP1578 | SOLDER SLEEVE | AR | 34-59-90 | 1004-1104 |
| SP1580 | SOLDER SLEEVE | AR | 34-59-10 | 1004-1104 |
| SP1580 | SOLDER SLEEVE | AR | 34-59-20 | 1004-1104 |
| SP1580 | SOLDER SLEEVE | AR | 34-59-30 | 1004-1104 |
| SP1581 | SOLDER SLEEVE | AR | 34-59-10 | 1004-1104 |
| SP1581 | SOLDER SLEEVE | AR | 34-59-20 | 1004-1104 |
| SP1581 | SOLDER SLEEVE | AR | 34-59-30 | 1004-1104 |
| SP1582 | SOLDER SLEEVE | AR | 34-59-10 | 1004-1104 |
| SP1582 | SOLDER SLEEVE | AR | 34-59-20 | 1004-1104 |
| SP1582 | SOLDER SLEEVE | AR | 34-59-30 | 1004-1104 |
| SP1583 | SOLDER SLEEVE | AR | 34-59-10 | 1004-1104 |
| SP1583 | SOLDER SLEEVE | AR | 34-59-20 | 1004-1104 |
| SP1583 | SOLDER SLEEVE | AR | 34-59-30 | 1004-1104 |
| SP1584 | SOLDER SLEEVE | AR | 34-59-10 | 1004-1104 |
| SP1584 | SOLDER SLEEVE | AR | 34-59-20 | 1004-1104 |
| SP1584 | SOLDER SLEEVE | AR | 34-59-30 | 1004-1104 |
| SP1585 | SOLDER SLEEVE | AR | 34-59-10 | 1004-1104 |
| SP1585 | SOLDER SLEEVE | AR | 34-59-20 | 1004-1104 |
| SP1585 | SOLDER SLEEVE | AR | 34-59-30 | 1004-1104 |
| SP1586 | SOLDER SLEEVE | AR | 34-59-10 | 1004-1104 |
| SP1586 | SOLDER SLEEVE | AR | 34-59-20 | 1004-1104 |
| SP1586 | SOLDER SLEEVE | AR | 34-59-30 | 1004-1104 |
| SP1587 | SOLDER SLEEVE | AR | 34-59-10 | 1004-1104 |

| CODE | NOMENCLATURE | LOCATION | MANUAL REF | EFF. |
|---|---|---|---|---|
| SP1587 | SOLDER SLEEVE | AR | 34-59-20 | 1004-1104 |
| SP1587 | SOLDER SLEEVE | AR | 34-59-30 | 1004-1104 |
| SP1588 | SOLDER SLEEVE | AR | 34-59-10 | 1004-1104 |
| SP1588 | SOLDER SLEEVE | AR | 34-59-20 | 1004-1104 |
| SP1588 | SOLDER SLEEVE | AR | 34-59-30 | 1004-1104 |
| SP1588 | SOLDER SLEEVE | AR | 34-59-40 | 1004-1104 |
| SP1588 | SOLDER SLEEVE | AR | 34-59-60 | 1004-1104 |
| SP1588 | SOLDER SLEEVE | AR | 34-59-70 | 1004-1104 |
| SP1588 | SOLDER SLEEVE | AR | 34-59-80 | 1004-1104 |
| SP1588 | SOLDER SLEEVE | AR | 34-59-90 | 1004-1104 |
| SP1589 | SOLDER SLEEVE | AR | 34-59-10 | 1004-1104 |
| SP1589 | SOLDER SLEEVE | AR | 34-59-20 | 1004-1104 |
| SP1589 | SOLDER SLEEVE | AR | 34-59-30 | 1004-1104 |
| SP1589 | SOLDER SLEEVE | AR | 34-59-40 | 1004-1104 |
| SP1589 | SOLDER SLEEVE | AR | 34-59-60 | 1004-1104 |
| SP1589 | SOLDER SLEEVE | AR | 34-59-70 | 1004-1104 |
| SP1589 | SOLDER SLEEVE | AR | 34-59-80 | 1004-1104 |
| SP1589 | SOLDER SLEEVE | AR | 34-59-90 | 1004-1104 |
| SP1590 | SOLDER SLEEVE | AR | 34-59-10 | 1004-1104 |
| SP1590 | SOLDER SLEEVE | AR | 34-59-20 | 1004-1104 |
| SP1590 | SOLDER SLEEVE | AR | 34-59-30 | 1004-1104 |
| SP1590 | SOLDER SLEEVE | AR | 34-59-40 | 1004-1104 |
| SP1590 | SOLDER SLEEVE | AR | 34-59-60 | 1004-1104 |
| SP1590 | SOLDER SLEEVE | AR | 34-59-70 | 1004-1104 |
| SP1590 | SOLDER SLEEVE | AR | 34-59-80 | 1004-1104 |
| SP1590 | SOLDER SLEEVE | AR | 34-59-90 | 1004-1104 |
| SP1591 | SOLDER SLEEVE | AR | 34-59-10 | 1004-1104 |
| SP1591 | SOLDER SLEEVE | AR | 34-59-20 | 1004-1104 |
| SP1591 | SOLDER SLEEVE | AR | 34-59-30 | 1004-1104 |
| SP1591 | SOLDER SLEEVE | AR | 34-59-40 | 1004-1104 |
| SP1591 | SOLDER SLEEVE | AR | 34-59-60 | 1004-1104 |
| SP1591 | SOLDER SLEEVE | AR | 34-59-70 | 1004-1104 |
| SP1591 | SOLDER SLEEVE | AR | 34-59-80 | 1004-1104 |
| SP1591 | SOLDER SLEEVE | AR | 34-59-90 | 1004-1104 |
| SP1592 | SOLDER SLEEVE | AR | 34-59-10 | 1004-1104 |
| SP1592 | SOLDER SLEEVE | AR | 34-59-20 | 1004-1104 |
| SP1592 | SOLDER SLEEVE | AR | 34-59-30 | 1004-1104 |
| SP1593 | SPLICE | AR | 34-59-10 | 1004-1104 |
| SP1593 | SPLICE | AR | 34-59-20 | 1004-1104 |
| SP1593 | SPLICE | AR | 34-59-30 | 1004-1104 |
| SP1594 | SPLICE | AR | 34-59-10 | 1004-1104 |

| CODE | NOMENCLATURE | LOCATION | MANUAL REF | EFF. |
|---|---|---|---|---|
| SP1594 | SPLICE | AR | 34-59-20 | 1004-1104 |
| SP1594 | SPLICE | AR | 34-59-30 | 1004-1104 |
| SP1594 | SPLICE | AR | 34-59-40 | 1004-1104 |
| SP1594 | SPLICE | AR | 34-59-60 | 1004-1104 |
| SP1594 | SPLICE | AR | 34-59-70 | 1004-1104 |
| SP1594 | SPLICE | AR | 34-59-80 | 1004-1104 |
| SP1594 | SPLICE | AR | 34-59-90 | 1004-1104 |
| SP1595 | SOLDER SLEEVE | AR | 34-54-21 | 1004-1104 |
| SP1595 | SOLDER SLEEVE | AR | 34-59-10 | 1004-1104 |
| SP1595 | SOLDER SLEEVE | AR | 34-59-20 | 1004-1104 |
| SP1595 | SOLDER SLEEVE | AR | 34-59-30 | 1004-1104 |
| SP1595 | SOLDER SLEEVE | AR | 34-59-40 | 1004-1104 |
| SP1595 | SOLDER SLEEVE | AR | 34-59-60 | 1004-1104 |
| SP1595 | SOLDER SLEEVE | AR | 34-59-70 | 1004-1104 |
| SP1595 | SOLDER SLEEVE | AR | 34-59-80 | 1004-1104 |
| SP1595 | SOLDER SLEEVE | AR | 34-59-90 | 1004-1104 |
| SP1596 | SOLDER SLEEVE | AR | 34-59-10 | 1004-1104 |
| SP1596 | SOLDER SLEEVE | AR | 34-59-20 | 1004-1104 |
| SP1596 | SOLDER SLEEVE | AR | 34-59-30 | 1004-1104 |
| SP1596 | SOLDER SLEEVE | AR | 34-59-40 | 1004-1104 |
| SP1596 | SOLDER SLEEVE | AR | 34-59-60 | 1004-1104 |
| SP1596 | SOLDER SLEEVE | AR | 34-59-70 | 1004-1104 |
| SP1596 | SOLDER SLEEVE | AR | 34-59-80 | 1004-1104 |
| SP1596 | SOLDER SLEEVE | AR | 34-59-90 | 1004-1104 |
| SP1597 | SPLICE | AR | 34-59-10 | 1004-1104 |
| SP1597 | SPLICE | AR | 34-59-20 | 1004-1104 |
| SP1597 | SPLICE | AR | 34-59-30 | 1004-1104 |
| SP1598 | SPLICE | AR | 34-59-10 | 1004-1104 |
| SP1598 | SPLICE | AR | 34-59-20 | 1004-1104 |
| SP1598 | SPLICE | AR | 34-59-30 | 1004-1104 |
| SP16 | SPLICE | AR | 28-41-00 | 1004-1104 |
| SP1600 | SPLICE | AR | 34-59-10 | 1004-1104 |
| SP1600 | SPLICE | AR | 34-59-20 | 1004-1104 |
| SP1600 | SPLICE | AR | 34-59-30 | 1004-1104 |
| SP1600 | SPLICE | AR | 34-59-40 | 1004-1104 |
| SP1600 | SPLICE | AR | 34-59-60 | 1004-1104 |
| SP1600 | SPLICE | AR | 34-59-70 | 1004-1104 |
| SP1600 | SPLICE | AR | 34-59-80 | 1004-1104 |
| SP1600 | SPLICE | AR | 34-59-90 | 1004-1104 |
| SP1601 | SPLICE | AR | 34-59-10 | 1004-1104 |
| SP1601 | SPLICE | AR | 34-59-20 | 1004-1104 |

| CODE | NOMENCLATURE | LOCATION | MANUAL REF | EFF. |
|---|---|---|---|---|
| SP1601 | SPLICE | AR | 34-59-30 | 1004-1104 |
| SP1601 | SPLICE | AR | 34-59-40 | 1004-1104 |
| SP1601 | SPLICE | AR | 34-59-60 | 1004-1104 |
| SP1601 | SPLICE | AR | 34-59-70 | 1004-1104 |
| SP1601 | SPLICE | AR | 34-59-80 | 1004-1104 |
| SP1601 | SPLICE | AR | 34-59-90 | 1004-1104 |
| SP1602 | SPLICE | AR | 34-59-10 | 1004-1104 |
| SP1602 | SPLICE | AR | 34-59-20 | 1004-1104 |
| SP1602 | SPLICE | AR | 34-59-30 | 1004-1104 |
| SP1602 | SPLICE | AR | 34-59-40 | 1004-1104 |
| SP1602 | SPLICE | AR | 34-59-60 | 1004-1104 |
| SP1602 | SPLICE | AR | 34-59-70 | 1004-1104 |
| SP1602 | SPLICE | AR | 34-59-80 | 1004-1104 |
| SP1602 | SPLICE | AR | 34-59-90 | 1004-1104 |
| SP1603 | SOLDER SLEEVE | AR | 34-59-10 | 1004-1104 |
| SP1603 | SOLDER SLEEVE | AR | 34-59-20 | 1004-1104 |
| SP1603 | SOLDER SLEEVE | AR | 34-59-30 | 1004-1104 |
| SP1603 | SOLDER SLEEVE | AR | 34-59-40 | 1004-1104 |
| SP1603 | SOLDER SLEEVE | AR | 34-59-60 | 1004-1104 |
| SP1603 | SOLDER SLEEVE | AR | 34-59-70 | 1004-1104 |
| SP1603 | SOLDER SLEEVE | AR | 34-59-80 | 1004-1104 |
| SP1603 | SOLDER SLEEVE | AR | 34-59-90 | 1004-1104 |
| SP1604 | SOLDER SLEEVE | AR | 34-59-10 | 1004-1104 |
| SP1604 | SOLDER SLEEVE | AR | 34-59-20 | 1004-1104 |
| SP1604 | SOLDER SLEEVE | AR | 34-59-30 | 1004-1104 |
| SP1604 | SOLDER SLEEVE | AR | 34-59-40 | 1004-1104 |
| SP1604 | SOLDER SLEEVE | AR | 34-59-60 | 1004-1104 |
| SP1604 | SOLDER SLEEVE | AR | 34-59-70 | 1004-1104 |
| SP1604 | SOLDER SLEEVE | AR | 34-59-80 | 1004-1104 |
| SP1604 | SOLDER SLEEVE | AR | 34-59-90 | 1004-1104 |
| SP1607 | SOLDER SLEEVE | AR | 34-59-10 | 1004-1104 |
| SP1607 | SOLDER SLEEVE | AR | 34-59-20 | 1004-1104 |
| SP1607 | SOLDER SLEEVE | AR | 34-59-30 | 1004-1104 |
| SP1607 | SOLDER SLEEVE | AR | 34-59-40 | 1004-1104 |
| SP1607 | SOLDER SLEEVE | AR | 34-59-60 | 1004-1104 |
| SP1607 | SOLDER SLEEVE | AR | 34-59-70 | 1004-1104 |
| SP1607 | SOLDER SLEEVE | AR | 34-59-80 | 1004-1104 |
| SP1607 | SOLDER SLEEVE | AR | 34-59-90 | 1004-1104 |
| SP1608 | SPLICE | AR | 34-59-10 | 1004-1104 |
| SP1608 | SPLICE | AR | 34-59-20 | 1004-1104 |
| SP1608 | SPLICE | AR | 34-59-30 | 1004-1104 |

| CODE | NOMENCLATURE | LOCATION | MANUAL REF | EFF. |
|---|---|---|---|---|
| SP1609 | SPLICE | AR | 34-59-10 | 1004-1104 |
| SP1609 | SPLICE | AR | 34-59-20 | 1004-1104 |
| SP1609 | SPLICE | AR | 34-59-30 | 1004-1104 |
| SP1609 | SPLICE | AR | 34-59-40 | 1004-1104 |
| SP1609 | SPLICE | AR | 34-59-60 | 1004-1104 |
| SP1609 | SPLICE | AR | 34-59-70 | 1004-1104 |
| SP1609 | SPLICE | AR | 34-59-80 | 1004-1104 |
| SP1609 | SPLICE | AR | 34-59-90 | 1004-1104 |
| SP1610 | SPLICE | AR | 34-59-10 | 1004-1104 |
| SP1610 | SPLICE | AR | 34-59-20 | 1004-1104 |
| SP1610 | SPLICE | AR | 34-59-30 | 1004-1104 |
| SP1610 | SPLICE | AR | 34-59-40 | 1004-1104 |
| SP1610 | SPLICE | AR | 34-59-60 | 1004-1104 |
| SP1610 | SPLICE | AR | 34-59-70 | 1004-1104 |
| SP1610 | SPLICE | AR | 34-59-80 | 1004-1104 |
| SP1610 | SPLICE | AR | 34-59-90 | 1004-1104 |
| SP1611 | SOLDER SLEEVE | AR | 34-59-10 | 1004-1104 |
| SP1611 | SOLDER SLEEVE | AR | 34-59-20 | 1004-1104 |
| SP1611 | SOLDER SLEEVE | AR | 34-59-30 | 1004-1104 |
| SP1611 | SOLDER SLEEVE | AR | 34-59-40 | 1004-1104 |
| SP1611 | SOLDER SLEEVE | AR | 34-59-60 | 1004-1104 |
| SP1611 | SOLDER SLEEVE | AR | 34-59-70 | 1004-1104 |
| SP1611 | SOLDER SLEEVE | AR | 34-59-80 | 1004-1104 |
| SP1611 | SOLDER SLEEVE | AR | 34-59-90 | 1004-1104 |
| SP1612 | SPLICE | AR | 34-59-10 | 1004-1104 |
| SP1612 | SPLICE | AR | 34-59-20 | 1004-1104 |
| SP1612 | SPLICE | AR | 34-59-30 | 1004-1104 |
| SP1613 | SPLICE | AR | 34-59-10 | 1004-1104 |
| SP1613 | SPLICE | AR | 34-59-20 | 1004-1104 |
| SP1613 | SPLICE | AR | 34-59-30 | 1004-1104 |
| SP1614 | SPLICE | AR | 34-59-10 | 1004-1104 |
| SP1614 | SPLICE | AR | 34-59-20 | 1004-1104 |
| SP1614 | SPLICE | AR | 34-59-30 | 1004-1104 |
| SP1615 | SPLICE | AR | 34-59-10 | 1004-1104 |
| SP1615 | SPLICE | AR | 34-59-30 | 1004-1104 |
| SP1615 | SPLICE | AR | 34-59-40 | 1004-1104 |
| SP1615 | SPLICE | AR | 34-59-60 | 1004-1104 |
| SP1616 | SOLDER SLEEVE | AR | 34-59-10 | 1004-1104 |
| SP1616 | SOLDER SLEEVE | AR | 34-59-20 | 1004-1104 |
| SP1616 | SOLDER SLEEVE | AR | 34-59-30 | 1004-1104 |
| SP1616 | SOLDER SLEEVE | AR | 34-59-40 | 1004-1104 |

| CODE | NOMENCLATURE | LOCATION | MANUAL REF | EFF. |
|---|---|---|---|---|
| SP1616 | SOLDER SLEEVE | AR | 34-59-60 | 1004-1104 |
| SP1616 | SOLDER SLEEVE | AR | 34-59-70 | 1004-1104 |
| SP1616 | SOLDER SLEEVE | AR | 34-59-80 | 1004-1104 |
| SP1616 | SOLDER SLEEVE | AR | 34-59-90 | 1004-1104 |
| SP1617 | SOLDER SLEEVE | AR | 34-44-00 | 1004-1104 |
| SP1617 | SOLDER SLEEVE | AR | 34-59-10 | 1004-1104 |
| SP1617 | SOLDER SLEEVE | AR | 34-59-20 | 1004-1104 |
| SP1617 | SOLDER SLEEVE | AR | 34-59-30 | 1004-1104 |
| SP1617 | SOLDER SLEEVE | AR | 34-59-40 | 1004-1104 |
| SP1617 | SOLDER SLEEVE | AR | 34-59-60 | 1004-1104 |
| SP1617 | SOLDER SLEEVE | AR | 34-59-70 | 1004-1104 |
| SP1617 | SOLDER SLEEVE | AR | 34-59-80 | 1004-1104 |
| SP1617 | SOLDER SLEEVE | AR | 34-59-90 | 1004-1104 |
| SP1618 | SOLDER SLEEVE | AR | 34-59-10 | 1004-1104 |
| SP1618 | SOLDER SLEEVE | AR | 34-59-20 | 1004-1104 |
| SP1618 | SOLDER SLEEVE | AR | 34-59-30 | 1004-1104 |
| SP1618 | SOLDER SLEEVE | AR | 34-59-40 | 1004-1104 |
| SP1618 | SOLDER SLEEVE | AR | 34-59-60 | 1004-1104 |
| SP1618 | SOLDER SLEEVE | AR | 34-59-70 | 1004-1104 |
| SP1618 | SOLDER SLEEVE | AR | 34-59-80 | 1004-1104 |
| SP1618 | SOLDER SLEEVE | AR | 34-59-90 | 1004-1104 |
| SP1619 | SOLDER SLEEVE | AR | 34-59-10 | 1004-1104 |
| SP1619 | SOLDER SLEEVE | AR | 34-59-20 | 1004-1104 |
| SP1619 | SOLDER SLEEVE | AR | 34-59-30 | 1004-1104 |
| SP1619 | SOLDER SLEEVE | AR | 34-59-40 | 1004-1104 |
| SP1619 | SOLDER SLEEVE | AR | 34-59-60 | 1004-1104 |
| SP1619 | SOLDER SLEEVE | AR | 34-59-70 | 1004-1104 |
| SP1619 | SOLDER SLEEVE | AR | 34-59-80 | 1004-1104 |
| SP1619 | SOLDER SLEEVE | AR | 34-59-90 | 1004-1104 |
| SP162 | SPLICE | AR | 27-32-00 | 1004-1104 |
| SP1620 | SOLDER SLEEVE | AR | 34-59-10 | 1004-1104 |
| SP1620 | SOLDER SLEEVE | AR | 34-59-20 | 1004-1104 |
| SP1620 | SOLDER SLEEVE | AR | 34-59-30 | 1004-1104 |
| SP1620 | SOLDER SLEEVE | AR | 34-59-40 | 1004-1104 |
| SP1620 | SOLDER SLEEVE | AR | 34-59-60 | 1004-1104 |
| SP1620 | SOLDER SLEEVE | AR | 34-59-70 | 1004-1104 |
| SP1620 | SOLDER SLEEVE | AR | 34-59-80 | 1004-1104 |
| SP1620 | SOLDER SLEEVE | AR | 34-59-90 | 1004-1104 |
| SP1621 | SPLICE | AR | 34-59-10 | 1004-1104 |
| SP1621 | SPLICE | AR | 34-59-20 | 1004-1104 |
| SP1621 | SPLICE | AR | 34-59-30 | 1004-1104 |

| CODE | NOMENCLATURE | LOCATION | MANUAL REF | EFF. |
|---|---|---|---|---|
| SP1621 | SPLICE | AR | 34-59-60 | 1004-1104 |
| SP1621 | SPLICE | AR | 34-59-70 | 1004-1104 |
| SP1621 | SPLICE | AR | 34-59-80 | 1004-1104 |
| SP1621 | SPLICE | AR | 34-59-90 | 1004-1104 |
| SP1622 | SPLICE | AR | 34-59-10 | 1004-1104 |
| SP1622 | SPLICE | AR | 34-59-20 | 1004-1104 |
| SP1622 | SPLICE | AR | 34-59-30 | 1004-1104 |
| SP1622 | SPLICE | AR | 34-59-60 | 1004-1104 |
| SP1622 | SPLICE | AR | 34-59-70 | 1004-1104 |
| SP1622 | SPLICE | AR | 34-59-80 | 1004-1104 |
| SP1622 | SPLICE | AR | 34-59-90 | 1004-1104 |
| SP1623 | SOLDER SLEEVE | AR | 34-59-10 | 1004-1104 |
| SP1623 | SOLDER SLEEVE | AR | 34-59-20 | 1004-1104 |
| SP1623 | SOLDER SLEEVE | AR | 34-59-30 | 1004-1104 |
| SP1623 | SOLDER SLEEVE | AR | 34-59-40 | 1004-1104 |
| SP1623 | SOLDER SLEEVE | AR | 34-59-60 | 1004-1104 |
| SP1623 | SOLDER SLEEVE | AR | 34-59-70 | 1004-1104 |
| SP1623 | SOLDER SLEEVE | AR | 34-59-80 | 1004-1104 |
| SP1623 | SOLDER SLEEVE | AR | 34-59-90 | 1004-1104 |
| SP1624 | SOLDER SLEEVE | AR | 34-59-10 | 1004-1104 |
| SP1624 | SOLDER SLEEVE | AR | 34-59-20 | 1004-1104 |
| SP1624 | SOLDER SLEEVE | AR | 34-59-30 | 1004-1104 |
| SP1624 | SOLDER SLEEVE | AR | 34-59-40 | 1004-1104 |
| SP1624 | SOLDER SLEEVE | AR | 34-59-60 | 1004-1104 |
| SP1624 | SOLDER SLEEVE | AR | 34-59-70 | 1004-1104 |
| SP1624 | SOLDER SLEEVE | AR | 34-59-80 | 1004-1104 |
| SP1624 | SOLDER SLEEVE | AR | 34-59-90 | 1004-1104 |
| SP1625 | SOLDER SLEEVE | AR | 34-59-10 | 1004-1104 |
| SP1625 | SOLDER SLEEVE | AR | 34-59-20 | 1004-1104 |
| SP1625 | SOLDER SLEEVE | AR | 34-59-30 | 1004-1104 |
| SP1625 | SOLDER SLEEVE | AR | 34-59-40 | 1004-1104 |
| SP1625 | SOLDER SLEEVE | AR | 34-59-60 | 1004-1104 |
| SP1625 | SOLDER SLEEVE | AR | 34-59-70 | 1004-1104 |
| SP1625 | SOLDER SLEEVE | AR | 34-59-80 | 1004-1104 |
| SP1625 | SOLDER SLEEVE | AR | 34-59-90 | 1004-1104 |
| SP1626 | SOLDER SLEEVE | AR | 34-59-10 | 1004-1104 |
| SP1626 | SOLDER SLEEVE | AR | 34-59-20 | 1004-1104 |
| SP1626 | SOLDER SLEEVE | AR | 34-59-30 | 1004-1104 |
| SP1626 | SOLDER SLEEVE | AR | 34-59-40 | 1004-1104 |
| SP1626 | SOLDER SLEEVE | AR | 34-59-60 | 1004-1104 |
| SP1626 | SOLDER SLEEVE | AR | 34-59-70 | 1004-1104 |

| CODE | NOMENCLATURE | LOCATION | MANUAL REF | EFF. |
|---|---|---|---|---|
| SP1626 | SOLDER SLEEVE | AR | 34-59-80 | 1004-1104 |
| SP1626 | SOLDER SLEEVE | AR | 34-59-90 | 1004-1104 |
| SP1627 | SPLICE | AR | 34-59-10 | 1004-1104 |
| SP1627 | SPLICE | AR | 34-59-20 | 1004-1104 |
| SP1627 | SPLICE | AR | 34-59-30 | 1004-1104 |
| SP1627 | SPLICE | AR | 34-59-40 | 1004-1104 |
| SP1627 | SPLICE | AR | 34-59-60 | 1004-1104 |
| SP1627 | SPLICE | AR | 34-59-70 | 1004-1104 |
| SP1627 | SPLICE | AR | 34-59-80 | 1004-1104 |
| SP1627 | SPLICE | AR | 34-59-90 | 1004-1104 |
| SP1628 | SOLDER SLEEVE | AR | 34-59-10 | 1004-1104 |
| SP1628 | SOLDER SLEEVE | AR | 34-59-20 | 1004-1104 |
| SP1628 | SOLDER SLEEVE | AR | 34-59-30 | 1004-1104 |
| SP1628 | SOLDER SLEEVE | AR | 34-59-40 | 1004-1104 |
| SP1628 | SOLDER SLEEVE | AR | 34-59-60 | 1004-1104 |
| SP1628 | SOLDER SLEEVE | AR | 34-59-70 | 1004-1104 |
| SP1628 | SOLDER SLEEVE | AR | 34-59-80 | 1004-1104 |
| SP1628 | SOLDER SLEEVE | AR | 34-59-90 | 1004-1104 |
| SP1629 | SPLICE | AR | 34-59-10 | 1004-1104 |
| SP1629 | SPLICE | AR | 34-59-20 | 1004-1104 |
| SP1629 | SPLICE | AR | 34-59-30 | 1004-1104 |
| SP1629 | SPLICE | AR | 34-59-40 | 1004-1104 |
| SP1629 | SPLICE | AR | 34-59-60 | 1004-1104 |
| SP1629 | SPLICE | AR | 34-59-70 | 1004-1104 |
| SP1629 | SPLICE | AR | 34-59-80 | 1004-1104 |
| SP1629 | SPLICE | AR | 34-59-90 | 1004-1104 |
| SP163 | SPLICE | AR | 27-32-00 | 1004-1104 |
| SP1630 | SPLICE | AR | 34-59-10 | 1004-1104 |
| SP1630 | SPLICE | AR | 34-59-20 | 1004-1104 |
| SP1630 | SPLICE | AR | 34-59-30 | 1004-1104 |
| SP1630 | SPLICE | AR | 34-59-40 | 1004-1104 |
| SP1630 | SPLICE | AR | 34-59-60 | 1004-1104 |
| SP1630 | SPLICE | AR | 34-59-70 | 1004-1104 |
| SP1630 | SPLICE | AR | 34-59-80 | 1004-1104 |
| SP1630 | SPLICE | AR | 34-59-90 | 1004-1104 |
| SP1631 | SPLICE | AR | 34-59-10 | 1004-1104 |
| SP1631 | SPLICE | AR | 34-59-20 | 1004-1104 |
| SP1631 | SPLICE | AR | 34-59-30 | 1004-1104 |
| SP1631 | SPLICE | AR | 34-59-40 | 1004-1104 |
| SP1631 | SPLICE | AR | 34-59-60 | 1004-1104 |
| SP1631 | SPLICE | AR | 34-59-70 | 1004-1104 |

| CODE | NOMENCLATURE | LOCATION | MANUAL REF | EFF. |
|---|---|---|---|---|
| SP1631 | SPLICE | AR | 34-59-80 | 1004-1104 |
| SP1631 | SPLICE | AR | 34-59-90 | 1004-1104 |
| SP1632 | SPLICE | AR | 34-59-10 | 1004-1104 |
| SP1632 | SPLICE | AR | 34-59-20 | 1004-1104 |
| SP1632 | SPLICE | AR | 34-59-30 | 1004-1104 |
| SP1632 | SPLICE | AR | 34-59-40 | 1004-1104 |
| SP1632 | SPLICE | AR | 34-59-60 | 1004-1104 |
| SP1632 | SPLICE | AR | 34-59-70 | 1004-1104 |
| SP1632 | SPLICE | AR | 34-59-80 | 1004-1104 |
| SP1632 | SPLICE | AR | 34-59-90 | 1004-1104 |
| SP1633 | SPLICE | AR | 34-59-10 | 1004-1104 |
| SP1633 | SPLICE | AR | 34-59-20 | 1004-1104 |
| SP1633 | SPLICE | AR | 34-59-30 | 1004-1104 |
| SP1634 | SOLDER SLEEVE | AR | 34-59-10 | 1004-1104 |
| SP1634 | SOLDER SLEEVE | AR | 34-59-20 | 1004-1104 |
| SP1634 | SOLDER SLEEVE | AR | 34-59-30 | 1004-1104 |
| SP1634 | SOLDER SLEEVE | AR | 34-59-40 | 1004-1104 |
| SP1634 | SOLDER SLEEVE | AR | 34-59-60 | 1004-1104 |
| SP1634 | SOLDER SLEEVE | AR | 34-59-70 | 1004-1104 |
| SP1634 | SOLDER SLEEVE | AR | 34-59-80 | 1004-1104 |
| SP1634 | SOLDER SLEEVE | AR | 34-59-90 | 1004-1104 |
| SP1635 | SOLDER SLEEVE | AR | 34-59-10 | 1004-1104 |
| SP1635 | SOLDER SLEEVE | AR | 34-59-20 | 1004-1104 |
| SP1635 | SOLDER SLEEVE | AR | 34-59-30 | 1004-1104 |
| SP1635 | SOLDER SLEEVE | AR | 34-59-40 | 1004-1104 |
| SP1635 | SOLDER SLEEVE | AR | 34-59-60 | 1004-1104 |
| SP1635 | SOLDER SLEEVE | AR | 34-59-70 | 1004-1104 |
| SP1635 | SOLDER SLEEVE | AR | 34-59-80 | 1004-1104 |
| SP1635 | SOLDER SLEEVE | AR | 34-59-90 | 1004-1104 |
| SP1636 | SPLICE | AR | 34-59-10 | 1004-1104 |
| SP1636 | SPLICE | AR | 34-59-20 | 1004-1104 |
| SP1636 | SPLICE | AR | 34-59-30 | 1004-1104 |
| SP1637 | SPLICE | AR | 34-59-10 | 1004-1104 |
| SP1637 | SPLICE | AR | 34-59-20 | 1004-1104 |
| SP1637 | SPLICE | AR | 34-59-30 | 1004-1104 |
| SP1638 | SPLICE | AR | 34-59-10 | 1004-1104 |
| SP1638 | SPLICE | AR | 34-59-20 | 1004-1104 |
| SP1638 | SPLICE | AR | 34-59-30 | 1004-1104 |
| SP1638 | SPLICE | AR | 34-59-40 | 1004-1104 |
| SP1638 | SPLICE | AR | 34-59-60 | 1004-1104 |
| SP1638 | SPLICE | AR | 34-59-70 | 1004-1104 |

| CODE | NOMENCLATURE | LOCATION | MANUAL REF | EFF. |
|---|---|---|---|---|
| SP1638 | SPLICE | AR | 34-59-80 | 1004-1104 |
| SP1638 | SPLICE | AR | 34-59-90 | 1004-1104 |
| SP164 | SPLICE | AR | 27-32-00 | 1004-1104 |
| SP1642 | SOLDER SLEEVE | AR | 34-54-20 | 1004-1104 |
| SP1642 | SOLDER SLEEVE | AR | 34-54-21 | 1004-1104 |
| SP1643 | SOLDER SLEEVE | AR | 34-54-20 | 1004-1104 |
| SP1643 | SOLDER SLEEVE | AR | 34-54-21 | 1004-1104 |
| SP165 | SPLICE | AR | 27-32-00 | 1004-1104 |
| SP1652 | SOLDER SLEEVE | AR | 34-56-20 | 1004-1104 |
| SP1653 | SOLDER SLEEVE | AR | 34-56-20 | 1004-1104 |
| SP1655 | SOLDER SLEEVE | AR | 34-56-20 | 1004-1104 |
| SP1656 | SOLDER SLEEVE | AR | 34-56-20 | 1004-1104 |
| SP1657 | SOLDER SLEEVE | AR | 34-56-20 | 1004-1104 |
| SP1658 | SOLDER SLEEVE | AR | 34-56-20 | 1004-1104 |
| SP166 | SPLICE | AR | 79-31-00 | 1004-1104 |
| SP167 | SPLICE | AR | 79-31-00 | 1004-1104 |
| SP168 | SPLICE | AR | 27-00-00 | 1004-1104 |
| SP169 | SPLICE | AR | 27-00-00 | 1004-1104 |
| SP1690 | SPLICE | AR | 21-52-00 | 1004-1104 |
| SP1691 | SPLICE | AR | 21-52-00 | 1004-1104 |
| SP1692 | SPLICE | AR | 21-52-00 | 1004-1104 |
| SP1693 | SPLICE | AR | 21-52-00 | 1004-1104 |
| SP1694 | SPLICE | AR | 21-52-00 | 1004-1104 |
| SP1695 | SPLICE | AR | 21-52-00 | 1004-1104 |
| SP1696 | SPLICE | AR | 21-52-00 | 1004-1104 |
| SP1697 | SPLICE | AR | 21-52-00 | 1004-1104 |
| SP1698 | SPLICE | AR | 21-52-00 | 1004-1104 |
| SP1699 | SPLICE | AR | 21-52-00 | 1004-1104 |
| SP17 | SPLICE | AR | 28-41-00 | 1004-1104 |
| SP1700 | SPLICE | AR | 21-52-00 | 1004-1104 |
| SP1701 | SPLICE | AR | 21-52-00 | 1004-1104 |
| SP1707 | SPLICE | AR | 25-42-00 | 1004-1104 |
| SP1726 | SOLDER SLEEVE | AR | 34-59-80 | 1004-1104 |
| SP1726 | SOLDER SLEEVE | AR | 34-59-90 | 1004-1104 |
| SP1757 | SOLDER SLEEVE | AR | 33-12-00 | 1004-1104 |
| SP1758 | SOLDER SLEEVE | AR | 33-12-00 | 1004-1104 |
| SP1759 | SOLDER SLEEVE | AR | 33-12-00 | 1004-1104 |
| SP1760 | SOLDER SLEEVE | AR | 33-12-00 | 1004-1104 |
| SP1761 | SOLDER SLEEVE | AR | 33-12-00 | 1004-1104 |
| SP1762 | SOLDER SLEEVE | AR | 33-12-00 | 1004-1104 |
| SP1763 | SOLDER SLEEVE | AR | 33-12-00 | 1004-1104 |

| CODE | NOMENCLATURE | LOCATION | MANUAL REF | EFF. |
|---|---|---|---|---|
| SP1765 | SOLDER SLEEVE | AR | 33-12-00 | 1004-1104 |
| SP178 | SPLICE | AR | 31-18-00 | 1004-1104 |
| SP179 | SPLICE | AR | 31-18-00 | 1004-1104 |
| SP18 | SPLICE | AR | 28-41-00 | 1004-1104 |
| SP180 | SPLICE | AR | 24-30-00 | 1004-1104 |
| SP1800 | SPLICE | AR | 33-12-00 | 1004-1104 |
| SP1802 | SPLICE | AR | 33-12-00 | 1004-1104 |
| SP1803 | SPLICE | AR | 33-12-00 | 1004-1104 |
| SP1804 | SPLICE | AR | 33-22-50 | 1004-1104 |
| SP1805 | SPLICE | AR | 33-22-10 | 1004-1104 |
| SP1805 | SPLICE | AR | 33-22-50 | 1004-1104 |
| SP1805 | SPLICE | AR | 33-23-00 | 1004-1104 |
| SP1805 | SPLICE | AR | 33-27-00 | 1004-1104 |
| SP181 | SPLICE | AR | 24-30-00 | 1004-1104 |
| SP1810 | SPLICE | AR | 33-23-00 | 1004-1104 |
| SP182 | SPLICE | AR | 21-51-00 | 1004-1104 |
| SP183 | SPLICE | AR | 21-51-00 | 1004-1104 |
| SP1836 | SPLICE | AR | 33-13-00 | 1004-1104 |
| SP1837 | SPLICE | AR | 33-13-00 | 1004-1104 |
| SP1838 | SPLICE | AR | 33-13-00 | 1004-1104 |
| SP1841 | SPLICE | AR | 33-13-00 | 1004-1104 |
| SP1842 | SPLICE | AR | 33-13-00 | 1004-1104 |
| SP1843 | SPLICE | AR | 33-13-00 | 1004-1104 |
| SP1844 | SPLICE | AR | 33-13-00 | 1004-1104 |
| SP1845 | SPLICE | AR | 33-13-00 | 1004-1104 |
| SP1846 | SPLICE | AR | 33-13-00 | 1004-1104 |
| SP1848 | SPLICE | AR | 33-22-10 | 1004-1104 |
| SP1849 | SPLICE | AR | 33-22-10 | 1004-1104 |
| SP185 | SPLICE | AR | 31-18-00 | 1004-1104 |
| SP1850 | SPLICE | AR | 21-23-00 | 1004-1104 |
| SP1851 | SPLICE | AR | 21-23-00 | 1004-1104 |
| SP1858 | SPLICE | AR | 33-13-00 | 1004-1104 |
| SP1859 | SPLICE | AR | 33-24-00 | 1004-1104 |
| SP186 | SPLICE | AR | 31-18-00 | 1004-1104 |
| SP1860 | SPLICE | AR | 33-25-00 | 1004-1104 |
| SP187 | SPLICE | AR | 30-30-00 | 1004-1104 |
| SP187 | SPLICE | AR | 30-32-00 | 1004-1104 |
| SP1870 | SPLICE | AR | 33-20-10 | 1004-1104 |
| SP1871 | SPLICE | AR | 33-26-00 | 1004-1104 |
| SP1872 | SPLICE | AR | 33-26-00 | 1004-1104 |
| SP1873 | SPLICE | AR | 33-26-00 | 1004-1104 |

| CODE | NOMENCLATURE | LOCATION | MANUAL REF | EFF. |
|---|---|---|---|---|
| SP1874 | SPLICE | AR | 33-26-00 | 1004-1104 |
| SP1875 | SPLICE | AR | 33-26-00 | 1004-1104 |
| SP1877 | SOLDER SLEEVE | AR | 23-51-00 | 1004-1104 |
| SP1878 | SOLDER SLEEVE | AR | 23-51-00 | 1004-1104 |
| SP1879 | SOLDER SLEEVE | AR | 23-51-00 | 1004-1104 |
| SP188 | SPLICE | AR | 30-30-00 | 1004-1104 |
| SP188 | SPLICE | AR | 30-31-00 | 1004-1104 |
| SP188 | SPLICE | AR | 30-32-00 | 1004-1104 |
| SP1880 | SOLDER SLEEVE | AR | 23-51-00 | 1004-1104 |
| SP1881 | SOLDER SLEEVE | AR | 23-51-00 | 1004-1104 |
| SP1882 | SOLDER SLEEVE | AR | 23-51-00 | 1004-1104 |
| SP1885 | SPLICE | AR | 33-12-00 | 1004-1104 |
| SP1886 | SPLICE | AR | 33-12-00 | 1004-1104 |
| SP1887 | SPLICE | AR | 33-12-00 | 1004-1104 |
| SP189 | SPLICE | AR | 21-41-00 | 1004-1104 |
| SP19 | SPLICE | AR | 28-41-00 | 1004-1104 |
| SP190 | SPLICE | AR | 21-41-00 | 1004-1104 |
| SP1909 | SPLICE | AR | 23-51-00 | 1004-1104 |
| SP191 | SPLICE | AR | 21-41-00 | 1004-1104 |
| SP1910 | SPLICE | AR | 23-51-00 | 1004-1104 |
| SP1912 | SPLICE | AR | 33-23-00 | 1004-1104 |
| SP1915 | SPLICE | AR | 33-23-00 | 1004-1104 |
| SP192 | SPLICE | AR | 21-41-00 | 1004-1104 |
| SP1924 | SPLICE | AR | 33-20-10 | 1004-1104 |
| SP1925 | SPLICE | AR | 33-20-10 | 1004-1104 |
| SP1926 | SPLICE | AR | 33-20-10 | 1004-1104 |
| SP1927 | SPLICE | AR | 33-20-10 | 1004-1104 |
| SP1928 | SPLICE | AR | 33-20-10 | 1004-1104 |
| SP1929 | SPLICE | AR | 33-20-10 | 1004-1104 |
| SP193 | SPLICE | AR | 21-41-00 | 1004-1104 |
| SP1933 | SPLICE | AR | 33-25-00 | 1004-1104 |
| SP1935 | SPLICE | AR | 33-12-00 | 1004-1104 |
| SP1936 | SPLICE | AR | 33-12-00 | 1004-1104 |
| SP1938 | SPLICE | AR | 33-12-00 | 1004-1104 |
| SP194 | SPLICE | AR | 21-41-00 | 1004-1104 |
| SP1944 | SPLICE | AR | 33-23-00 | 1004-1104 |
| SP1945 | SPLICE | AR | 33-23-00 | 1004-1104 |
| SP1946 | SPLICE | AR | 33-12-00 | 1004-1104 |
| SP1947 | SPLICE | AR | 33-12-00 | 1004-1104 |
| SP1948 | SPLICE | AR | 33-12-00 | 1004-1104 |
| SP195 | SPLICE | AR | 21-41-00 | 1004-1104 |

| CODE | NOMENCLATURE | LOCATION | MANUAL REF | EFF. |
|---|---|---|---|---|
| SP1950 | SPLICE | AR | 25-31-00 | 1004-1104 |
| SP1951 | SPLICE | AR | 25-31-00 | 1004-1104 |
| SP1952 | SPLICE | AR | 25-31-00 | 1004-1104 |
| SP1953 | SPLICE | AR | 25-31-00 | 1004-1104 |
| SP1954 | SPLICE | AR | 25-31-00 | 1004-1104 |
| SP1955 | SPLICE | AR | 25-31-00 | 1004-1104 |
| SP1955 | SPLICE | AR | 25-31-10 | 1004-1104 |
| SP1956 | SPLICE | AR | 25-31-00 | 1004-1104 |
| SP1956 | SPLICE | AR | 25-31-10 | 1004-1104 |
| SP1959 | SPLICE | AR | 33-24-00 | 1004-1104 |
| SP196 | SPLICE | AR | 21-41-00 | 1004-1104 |
| SP1962 | SPLICE | AR | 33-13-00 | 1004-1104 |
| SP1963 | SPLICE | AR | 33-24-00 | 1004-1104 |
| SP1963 | SPLICE | AR | 33-25-00 | 1004-1104 |
| SP197 | SPLICE | AR | 21-41-00 | 1004-1104 |
| SP1975 | SPLICE | AR | 33-12-00 | 1004-1104 |
| SP1976 | SPLICE | AR | 33-12-00 | 1004-1104 |
| SP198 | SPLICE | AR | 21-41-00 | 1004-1104 |
| SP1988 | SPLICE | AR | 33-23-00 | 1004-1104 |
| SP1989 | SPLICE | AR | 33-23-00 | 1004-1104 |
| SP199 | SPLICE | AR | 21-41-00 | 1004-1104 |
| SP20 | SPLICE | AR | 28-41-00 | 1004-1104 |
| SP200 | SPLICE | AR | 21-41-00 | 1004-1104 |
| SP2004 | SPLICE | AR | 29-10-00 | 1004-1104 |
| SP2004 | SPLICE | AR | 29-30-00 | 1004-1104 |
| SP2004 | SPLICE | AR | 32-30-00 | 1004-1104 |
| SP2004 | SPLICE | AR | 32-60-00 | 1004-1104 |
| SP201 | SPLICE | AR | 21-41-00 | 1004-1104 |
| SP2010 | SPLICE | AR | 34-10-00 | 1004-1104 |
| SP2011 | SPLICE | AR | 34-10-00 | 1004-1104 |
| SP2013 | SPLICE | AR | 34-10-00 | 1004-1104 |
| SP2013 | SPLICE | AR | 34-54-40 | 1004-1104 |
| SP2014 | SPLICE | AR | 34-10-00 | 1004-1104 |
| SP2014 | SPLICE | AR | 34-54-40 | 1004-1104 |
| SP2015 | SPLICE | AR | 34-10-00 | 1004-1104 |
| SP2015 | SPLICE | AR | 34-54-40 | 1004-1104 |
| SP2016 | SPLICE | AR | 34-10-00 | 1004-1104 |
| SP2016 | SPLICE | AR | 34-54-40 | 1004-1104 |
| SP2017 | SPLICE | AR | 34-10-00 | 1004-1104 |
| SP2017 | SPLICE | AR | 34-54-40 | 1004-1104 |
| SP2018 | SPLICE | AR | 34-10-00 | 1004-1104 |

| CODE | NOMENCLATURE | LOCATION | MANUAL REF | EFF. |
|---|---|---|---|---|
| SP2018 | SPLICE | AR | 34-54-40 | 1004-1104 |
| SP2019 | SPLICE | AR | 34-10-00 | 1004-1104 |
| SP2019 | SPLICE | AR | 34-54-40 | 1004-1104 |
| SP202 | SPLICE | AR | 21-41-00 | 1004-1104 |
| SP2020 | SPLICE | AR | 34-10-00 | 1004-1104 |
| SP2020 | SPLICE | AR | 34-54-40 | 1004-1104 |
| SP2021 | SPLICE | AR | 34-10-00 | 1004-1104 |
| SP2021 | SPLICE | AR | 34-54-40 | 1004-1104 |
| SP2022 | SPLICE | AR | 34-10-00 | 1004-1104 |
| SP2022 | SPLICE | AR | 34-54-40 | 1004-1104 |
| SP2023 | SPLICE | AR | 34-10-00 | 1004-1104 |
| SP2024 | SPLICE | AR | 34-10-00 | 1004-1104 |
| SP2025 | SPLICE | AR | 34-10-00 | 1004-1104 |
| SP2025 | SPLICE | AR | 34-54-21 | 1004-1104 |
| SP2026 | SPLICE | AR | 34-10-00 | 1004-1104 |
| SP2027 | SPLICE | AR | 34-10-00 | 1004-1104 |
| SP2028 | SPLICE | AR | 34-10-00 | 1004-1104 |
| SP203 | SPLICE | AR | 21-41-00 | 1004-1104 |
| SP2030 | SPLICE | AR | 34-10-00 | 1004-1104 |
| SP2031 | SPLICE | AR | 34-10-00 | 1004-1104 |
| SP2035 | SPLICE | AR | 34-10-00 | 1004-1104 |
| SP2036 | SOLDER SLEEVE | AR | 34-10-00 | 1004-1104 |
| SP2037 | SOLDER SLEEVE | AR | 34-10-00 | 1004-1104 |
| SP2038 | SOLDER SLEEVE | AR | 34-10-00 | 1004-1104 |
| SP204 | SPLICE | AR | 21-41-00 | 1004-1104 |
| SP205 | SPLICE | AR | 21-41-00 | 1004-1104 |
| SP206 | SPLICE | AR | 21-41-00 | 1004-1104 |
| SP207 | SPLICE | AR | 21-10-00 | 1004-1104 |
| SP207 | SPLICE | AR | 21-20-00 | 1004-1104 |
| SP207 | SPLICE | AR | 21-40-00 | 1004-1104 |
| SP21 | SPLICE | AR | 28-41-00 | 1004-1104 |
| SP22 | SPLICE | AR | 28-41-00 | 1004-1104 |
| SP23 | SPLICE | AR | 28-41-00 | 1004-1104 |
| SP24 | SPLICE | AR | 28-41-00 | 1004-1104 |
| SP25 | SPLICE | AR | 28-41-00 | 1004-1104 |
| SP2548 | SOLDER SLEEVE | AR | 34-54-10 | 1004-1104 |
| SP2549 | SOLDER SLEEVE | AR | 34-54-10 | 1004-1104 |
| SP2550 | SOLDER SLEEVE | AR | 34-54-10 | 1004-1104 |
| SP2551 | SOLDER SLEEVE | AR | 34-54-10 | 1004-1104 |
| SP2552 | SOLDER SLEEVE | AR | 34-54-10 | 1004-1104 |
| SP2553 | SOLDER SLEEVE | AR | 34-54-10 | 1004-1104 |

| CODE | NOMENCLATURE | LOCATION | MANUAL REF | EFF. |
|---|---|---|---|---|
| SP2554 | SOLDER SLEEVE | AR | 34-54-10 | 1004-1104 |
| SP2555 | SPLICE | AR | 33-13-00 | 1004-1104 |
| SP2558 | SOLDER SLEEVE | AR | 34-54-10 | 1004-1104 |
| SP2560 | SPLICE | AR | 23-30-00 | 1004-1104 |
| SP2561 | SOLDER SLEEVE | AR | 23-30-00 | 1004-1104 |
| SP2562 | SOLDER SLEEVE | AR | 23-30-00 | 1004-1104 |
| SP2563 | SOLDER SLEEVE | AR | 23-30-00 | 1004-1104 |
| SP2564 | SOLDER SLEEVE | AR | 23-30-00 | 1004-1104 |
| SP2565 | SOLDER SLEEVE | AR | 23-30-00 | 1004-1104 |
| SP2566 | SOLDER SLEEVE | AR | 23-30-00 | 1004-1104 |
| SP2567 | SOLDER SLEEVE | AR | 23-30-00 | 1004-1104 |
| SP2568 | SOLDER SLEEVE | AR | 23-30-00 | 1004-1104 |
| SP2569 | SOLDER SLEEVE | AR | 23-30-00 | 1004-1104 |
| SP2570 | SOLDER SLEEVE | AR | 23-30-00 | 1004-1104 |
| SP2571 | SOLDER SLEEVE | AR | 23-30-00 | 1004-1104 |
| SP2572 | SOLDER SLEEVE | AR | 23-30-00 | 1004-1104 |
| SP2573 | SOLDER SLEEVE | AR | 23-30-00 | 1004-1104 |
| SP2574 | SOLDER SLEEVE | AR | 23-30-00 | 1004-1104 |
| SP2575 | SOLDER SLEEVE | AR | 23-30-00 | 1004-1104 |
| SP2576 | SOLDER SLEEVE | AR | 28-20-00 | 1004-1104 |
| SP2577 | SOLDER SLEEVE | AR | 28-20-00 | 1004-1104 |
| SP2578 | SOLDER SLEEVE | AR | 28-20-00 | 1004-1104 |
| SP2579 | SOLDER SLEEVE | AR | 28-20-00 | 1004-1104 |
| SP2580 | SPLICE | AR | 28-20-00 | 1004-1104 |
| SP2581 | SPLICE | AR | 28-20-00 | 1004-1104 |
| SP2582 | SPLICE | AR | 28-20-00 | 1004-1104 |
| SP2583 | SPLICE | AR | 28-20-00 | 1004-1104 |
| SP2584 | SPLICE | AR | 28-20-00 | 1004-1104 |
| SP2585 | SPLICE | AR | 28-20-00 | 1004-1104 |
| SP2586 | SPLICE | AR | 28-20-00 | 1004-1104 |
| SP2587 | SPLICE | AR | 28-20-00 | 1004-1104 |
| SP2588 | SPLICE | AR | 28-20-00 | 1004-1104 |
| SP2589 | SPLICE | AR | 28-20-00 | 1004-1104 |
| SP2590 | SPLICE | AR | 28-20-00 | 1004-1104 |
| SP2591 | SPLICE | AR | 28-20-00 | 1004-1104 |
| SP2592 | SOLDER SLEEVE | AR | 28-41-00 | 1004-1104 |
| SP2593 | SOLDER SLEEVE | AR | 28-41-00 | 1004-1104 |
| SP2594 | SOLDER SLEEVE | AR | 28-41-00 | 1004-1104 |
| SP2595 | SOLDER SLEEVE | AR | 28-41-00 | 1004-1104 |
| SP2596 | SOLDER SLEEVE | AR | 28-41-00 | 1004-1104 |
| SP2597 | SOLDER SLEEVE | AR | 28-41-00 | 1004-1104 |

| CODE | NOMENCLATURE | LOCATION | MANUAL REF | EFF. |
|---|---|---|---|---|
| SP2598 | SOLDER SLEEVE | AR | 28-41-00 | 1004-1104 |
| SP2599 | SOLDER SLEEVE | AR | 28-41-00 | 1004-1104 |
| SP26 | SPLICE | AR | 28-41-00 | 1004-1104 |
| SP2616 | COAX SLEEVE | AR | 34-59-41 | 1004-1104 |
| SP2617 | COAX SLEEVE | AR | 34-59-41 | 1004-1104 |
| SP2618 | SPLICE | AR | 34-59-41 | 1004-1104 |
| SP2619 | SOLDER SLEEVE | AR | 34-59-41 | 1004-1104 |
| SP2620 | SOLDER SLEEVE | AR | 34-59-41 | 1004-1104 |
| SP2621 | SPLICE | AR | 34-59-41 | 1004-1104 |
| SP2622 | SPLICE | AR | 34-59-41 | 1004-1104 |
| SP2623 | SOLDER SLEEVE | AR | 34-59-41 | 1004-1104 |
| SP2624 | SPLICE | AR | 34-59-41 | 1004-1104 |
| SP2625 | SOLDER SLEEVE | AR | 23-52-00 | 1004-1104 |
| SP2626 | SOLDER SLEEVE | AR | 23-52-00 | 1004-1104 |
| SP2627 | SOLDER SLEEVE | AR | 23-52-00 | 1004-1104 |
| SP2628 | SOLDER SLEEVE | AR | 23-52-00 | 1004-1104 |
| SP2629 | SOLDER SLEEVE | AR | 23-52-00 | 1004-1104 |
| SP2630 | SOLDER SLEEVE | AR | 23-52-00 | 1004-1104 |
| SP2631 | SOLDER SLEEVE | AR | 23-52-00 | 1004-1104 |
| SP2632 | SOLDER SLEEVE | AR | 23-52-00 | 1004-1104 |
| SP2633 | SOLDER SLEEVE | AR | 23-52-00 | 1004-1104 |
| SP2634 | SOLDER SLEEVE | AR | 23-52-00 | 1004-1104 |
| SP2635 | SOLDER SLEEVE | AR | 23-52-00 | 1004-1104 |
| SP2636 | SOLDER SLEEVE | AR | 23-52-00 | 1004-1104 |
| SP2637 | SOLDER SLEEVE | AR | 23-52-00 | 1004-1104 |
| SP2638 | SOLDER SLEEVE | AR | 23-52-00 | 1004-1104 |
| SP2639 | SPLICE | AR | 23-52-00 | 1004-1104 |
| SP2640 | SOLDER SLEEVE | AR | 23-52-00 | 1004-1104 |
| SP2641 | SOLDER SLEEVE | AR | 23-52-00 | 1004-1104 |
| SP2642 | SOLDER SLEEVE | AR | 23-52-00 | 1004-1104 |
| SP2643 | SOLDER SLEEVE | AR | 23-52-00 | 1004-1104 |
| SP2644 | SOLDER SLEEVE | AR | 23-52-00 | 1004-1104 |
| SP2645 | SPLICE | AR | 23-52-00 | 1004-1104 |
| SP2646 | SPLICE | AR | 23-52-00 | 1004-1104 |
| SP2647 | SPLICE | AR | 23-52-00 | 1004-1104 |
| SP2648 | SPLICE | AR | 23-52-00 | 1004-1104 |
| SP2649 | SPLICE | AR | 23-52-00 | 1004-1104 |
| SP2655 | SPLICE | AR | 23-52-00 | 1004-1104 |
| SP2656 | SPLICE | AR | 23-52-00 | 1004-1104 |
| SP2657 | SPLICE | AR | 23-52-00 | 1004-1104 |
| SP2658 | SPLICE | AR | 23-52-00 | 1004-1104 |

| CODE | NOMENCLATURE | LOCATION | MANUAL REF | EFF. |
|---|---|---|---|---|
| SP2659 | SPLICE | AR | 23-52-00 | 1004-1104 |
| SP2660 | SOLDER SLEEVE | AR | 34-51-10 | 1004-1104 |
| SP2661 | SOLDER SLEEVE | AR | 34-51-10 | 1004-1104 |
| SP2662 | SOLDER SLEEVE | AR | 34-51-10 | 1004-1104 |
| SP2663 | SOLDER SLEEVE | AR | 34-51-10 | 1004-1104 |
| SP2664 | SOLDER SLEEVE | AR | 34-51-10 | 1004-1104 |
| SP2665 | SPLICE | AR | 23-52-00 | 1004-1104 |
| SP2666 | SPLICE | AR | 23-52-00 | 1004-1104 |
| SP2667 | SPLICE | AR | 23-52-00 | 1004-1104 |
| SP2670 | SPLICE | AR | 34-13-00 | 1004-1104 |
| SP2671 | SPLICE | AR | 34-13-00 | 1004-1104 |
| SP2672 | SPLICE | AR | 34-13-00 | 1004-1104 |
| SP2673 | SPLICE | AR | 34-13-00 | 1004-1104 |
| SP2674 | SPLICE | AR | 34-13-00 | 1004-1104 |
| SP2675 | SPLICE | AR | 34-13-00 | 1004-1104 |
| SP2676 | SPLICE | AR | 34-13-00 | 1004-1104 |
| SP2677 | SPLICE | AR | 34-13-00 | 1004-1104 |
| SP2678 | SPLICE | AR | 34-13-00 | 1004-1104 |
| SP2679 | SPLICE | AR | 34-13-00 | 1004-1104 |
| SP2691 | SOLDER SLEEVE | AR | 23-70-00 | 1004-1104 |
| SP2692 | SOLDER SLEEVE | AR | 23-70-00 | 1004-1104 |
| SP2693 | SOLDER SLEEVE | AR | 23-70-00 | 1004-1104 |
| SP2694 | SOLDER SLEEVE | AR | 23-70-00 | 1004-1104 |
| SP2695 | SOLDER SLEEVE | AR | 23-70-00 | 1004-1104 |
| SP2696 | SOLDER SLEEVE | AR | 23-70-00 | 1004-1104 |
| SP2697 | SOLDER SLEEVE | AR | 23-70-00 | 1004-1104 |
| SP2698 | SOLDER SLEEVE | AR | 23-70-00 | 1004-1104 |
| SP2698 | SOLDER SLEEVE | AR | 31-14-50 | 1004-1104 |
| SP2699 | SOLDER SLEEVE | AR | 23-70-00 | 1004-1104 |
| SP27 | SPLICE | AR | 28-41-00 | 1004-1104 |
| SP2700 | SOLDER SLEEVE | AR | 23-70-00 | 1004-1104 |
| SP2701 | SOLDER SLEEVE | AR | 23-70-00 | 1004-1104 |
| SP2702 | SOLDER SLEEVE | AR | 23-70-00 | 1004-1104 |
| SP2703 | SOLDER SLEEVE | AR | 23-70-00 | 1004-1104 |
| SP2704 | SOLDER SLEEVE | AR | 23-70-00 | 1004-1104 |
| SP2705 | SOLDER SLEEVE | AR | 23-70-00 | 1004-1104 |
| SP2706 | SOLDER SLEEVE | AR | 23-70-00 | 1004-1104 |
| SP2707 | SOLDER SLEEVE | AR | 23-70-00 | 1004-1104 |
| SP2708 | SOLDER SLEEVE | AR | 23-70-00 | 1004-1104 |
| SP2715 | SPLICE | AR | 23-14-00 | 1004-1104 |
| SP2716 | SPLICE | AR | 23-14-00 | 1004-1104 |

| CODE | NOMENCLATURE | LOCATION | MANUAL REF | EFF. |
|---|---|---|---|---|
| SP2717 | SPLICE | AR | 23-14-00 | 1004-1104 |
| SP2718 | SPLICE | AR | 23-14-00 | 1004-1104 |
| SP2719 | SOLDER SLEEVE | AR | 23-14-00 | 1004-1104 |
| SP2720 | SOLDER SLEEVE | AR | 23-14-00 | 1004-1104 |
| SP2721 | SOLDER SLEEVE | AR | 23-14-00 | 1004-1104 |
| SP2722 | SOLDER SLEEVE | AR | 23-14-00 | 1004-1104 |
| SP2723 | SOLDER SLEEVE | AR | 23-14-00 | 1004-1104 |
| SP2724 | SOLDER SLEEVE | AR | 23-14-00 | 1004-1104 |
| SP2725 | SOLDER SLEEVE | AR | 23-14-00 | 1004-1104 |
| SP2726 | SPLICE | AR | 23-14-00 | 1004-1104 |
| SP2727 | SPLICE | AR | 23-14-00 | 1004-1104 |
| SP2728 | SOLDER SLEEVE | AR | 23-14-00 | 1004-1104 |
| SP2729 | SOLDER SLEEVE | AR | 23-14-00 | 1004-1104 |
| SP2730 | SOLDER SLEEVE | AR | 23-14-00 | 1004-1104 |
| SP2731 | SOLDER SLEEVE | AR | 23-14-00 | 1004-1104 |
| SP2732 | SOLDER SLEEVE | AR | 23-14-00 | 1004-1104 |
| SP2733 | SOLDER SLEEVE | AR | 23-14-00 | 1004-1104 |
| SP2734 | SOLDER SLEEVE | AR | 23-14-00 | 1004-1104 |
| SP2735 | SOLDER SLEEVE | AR | 23-14-00 | 1004-1104 |
| SP2736 | SOLDER SLEEVE | AR | 34-54-30 | 1004-1104 |
| SP2736 | SOLDER SLEEVE | AR | 34-54-40 | 1004-1104 |
| SP2737 | SOLDER SLEEVE | AR | 34-54-30 | 1004-1104 |
| SP2737 | SOLDER SLEEVE | AR | 34-54-40 | 1004-1104 |
| SP2738 | SOLDER SLEEVE | AR | 34-54-30 | 1004-1104 |
| SP2738 | SOLDER SLEEVE | AR | 34-54-40 | 1004-1104 |
| SP2739 | SOLDER SLEEVE | AR | 34-54-30 | 1004-1104 |
| SP2739 | SOLDER SLEEVE | AR | 34-54-40 | 1004-1104 |
| SP2740 | SOLDER SLEEVE | AR | 34-54-30 | 1004-1104 |
| SP2740 | SOLDER SLEEVE | AR | 34-54-40 | 1004-1104 |
| SP2741 | SOLDER SLEEVE | AR | 34-54-30 | 1004-1104 |
| SP2741 | SOLDER SLEEVE | AR | 34-54-40 | 1004-1104 |
| SP2742 | SOLDER SLEEVE | AR | 34-54-30 | 1004-1104 |
| SP2742 | SOLDER SLEEVE | AR | 34-54-40 | 1004-1104 |
| SP2743 | SOLDER SLEEVE | AR | 34-54-30 | 1004-1104 |
| SP2743 | SOLDER SLEEVE | AR | 34-54-40 | 1004-1104 |
| SP2744 | SOLDER SLEEVE | AR | 34-54-20 | 1004-1104 |
| SP2744 | SOLDER SLEEVE | AR | 34-54-21 | 1004-1104 |
| SP2745 | SOLDER SLEEVE | AR | 34-54-20 | 1004-1104 |
| SP2745 | SOLDER SLEEVE | AR | 34-54-21 | 1004-1104 |
| SP2746 | SOLDER SLEEVE | AR | 34-54-20 | 1004-1104 |
| SP2746 | SOLDER SLEEVE | AR | 34-54-21 | 1004-1104 |

| CODE | NOMENCLATURE | LOCATION | MANUAL REF | EFF. |
|---|---|---|---|---|
| SP2747 | SOLDER SLEEVE | AR | 34-54-20 | 1004-1104 |
| SP2747 | SOLDER SLEEVE | AR | 34-54-21 | 1004-1104 |
| SP2748 | SOLDER SLEEVE | AR | 34-54-20 | 1004-1104 |
| SP2748 | SOLDER SLEEVE | AR | 34-54-21 | 1004-1104 |
| SP2749 | SOLDER SLEEVE | AR | 34-54-20 | 1004-1104 |
| SP2749 | SOLDER SLEEVE | AR | 34-54-21 | 1004-1104 |
| SP2750 | SPLICE | AR | 25-61-00 | 1004-1104 |
| SP2751 | SPLICE | AR | 25-61-00 | 1004-1104 |
| SP2752 | SPLICE | AR | 25-61-00 | 1004-1104 |
| SP2753 | SPLICE | AR | 25-61-00 | 1004-1104 |
| SP2764 | SOLDER SLEEVE | AR | 25-61-00 | 1004-1104 |
| SP2765 | SOLDER SLEEVE | AR | 25-61-00 | 1004-1104 |
| SP2789 | SOLDER SLEEVE | AR | 34-59-70 | 1004-1104 |
| SP2789 | SOLDER SLEEVE | AR | 34-59-80 | 1004-1104 |
| SP28 | SPLICE | AR | 28-41-00 | 1004-1104 |
| SP2815 | SPLICE | AR | 34-54-30 | 1004-1104 |
| SP2815 | SPLICE | AR | 34-54-40 | 1004-1104 |
| SP2819 | SOLDER SLEEVE | AR | 25-61-00 | 1004-1104 |
| SP2820 | SOLDER SLEEVE | AR | 25-61-00 | 1004-1104 |
| SP2821 | SOLDER SLEEVE | AR | 25-61-00 | 1004-1104 |
| SP2822 | SOLDER SLEEVE | AR | 25-61-00 | 1004-1104 |
| SP2823 | SOLDER SLEEVE | AR | 25-61-00 | 1004-1104 |
| SP2824 | SOLDER SLEEVE | AR | 25-61-00 | 1004-1104 |
| SP2825 | SOLDER SLEEVE | AR | 25-61-00 | 1004-1104 |
| SP2826 | SOLDER SLEEVE | AR | 25-61-00 | 1004-1104 |
| SP2827 | SOLDER SLEEVE | AR | 25-61-00 | 1004-1104 |
| SP2828 | SOLDER SLEEVE | AR | 25-61-00 | 1004-1104 |
| SP2841 | SOLDER SLEEVE | AR | 34-54-20 | 1004-1104 |
| SP2842 | SOLDER SLEEVE | AR | 34-54-30 | 1004-1104 |
| SP2842 | SOLDER SLEEVE | AR | 34-54-40 | 1004-1104 |
| SP2843 | SOLDER SLEEVE | AR | 34-54-30 | 1004-1104 |
| SP2843 | SOLDER SLEEVE | AR | 34-54-40 | 1004-1104 |
| SP2844 | SOLDER SLEEVE | AR | 34-54-30 | 1004-1104 |
| SP2844 | SOLDER SLEEVE | AR | 34-54-40 | 1004-1104 |
| SP2845 | SOLDER SLEEVE | AR | 34-54-30 | 1004-1104 |
| SP2845 | SOLDER SLEEVE | AR | 34-54-40 | 1004-1104 |
| SP2846 | SOLDER SLEEVE | AR | 34-54-30 | 1004-1104 |
| SP2846 | SOLDER SLEEVE | AR | 34-54-40 | 1004-1104 |
| SP2847 | SOLDER SLEEVE | AR | 34-54-30 | 1004-1104 |
| SP2847 | SOLDER SLEEVE | AR | 34-54-40 | 1004-1104 |
| SP2848 | SOLDER SLEEVE | AR | 34-54-30 | 1004-1104 |

| CODE | NOMENCLATURE | LOCATION | MANUAL REF | EFF. |
|---|---|---|---|---|
| SP2848 | SOLDER SLEEVE | AR | 34-54-40 | 1004-1104 |
| SP29 | SPLICE | AR | 28-41-00 | 1004-1104 |
| SP30 | SPLICE | AR | 21-31-00 | 1004-1104 |
| SP31 | SPLICE | AR | 30-12-00 | 1004-1104 |
| SP32 | SPLICE | AR | 30-12-00 | 1004-1104 |
| SP33 | SPLICE | AR | 24-61-00 | 1004-1104 |
| SP34 | SPLICE | AR | 24-61-00 | 1004-1104 |
| SP38 | SPLICE | AR | 24-20-00 | 1004-1104 |
| SP4 | SPLICE | AR | 24-30-00 | 1004-1104 |
| SP41 | SPLICE | AR | 24-20-00 | 1004-1104 |
| SP44 | SPLICE | AR | 24-20-00 | 1004-1104 |
| SP45 | SPLICE | AR | 24-20-00 | 1004-1104 |
| SP46 | SPLICE | AR | 27-50-00 | 1004-1104 |
| SP47 | SPLICE | AR | 27-50-00 | 1004-1104 |
| SP48 | SPLICE | AR | 27-50-00 | 1004-1104 |
| SP49 | SPLICE | AR | 27-50-00 | 1004-1104 |
| SP50 | SPLICE | AR | 27-50-00 | 1004-1104 |
| SP51 | SPLICE | AR | 27-50-00 | 1004-1104 |
| SP52 | SPLICE | AR | 27-50-00 | 1004-1104 |
| SP53 | SPLICE | AR | 27-50-00 | 1004-1104 |
| SP54 | SPLICE | AR | 27-50-00 | 1004-1104 |
| SP55 | SPLICE | AR | 27-50-00 | 1004-1104 |
| SP56 | SPLICE | AR | 27-50-00 | 1004-1104 |
| SP57 | SPLICE | AR | 27-50-00 | 1004-1104 |
| SP58 | SPLICE | AR | 73-30-00 | 1004-1104 |
| SP59 | SPLICE | AR | 73-30-00 | 1004-1104 |
| SP6 | SPLICE | AR | 24-30-00 | 1004-1104 |
| SP60 | SPLICE | AR | 73-30-00 | 1004-1104 |
| SP600 | SOLDER SLEEVE | AR | 22-10-00 | 1004-1104 |
| SP601 | SOLDER SLEEVE | AR | 22-10-00 | 1004-1104 |
| SP602 | SOLDER SLEEVE | AR | 22-10-00 | 1004-1104 |
| SP603 | SOLDER SLEEVE | AR | 22-10-00 | 1004-1104 |
| SP604 | SOLDER SLEEVE | AR | 22-10-00 | 1004-1104 |
| SP605 | SOLDER SLEEVE | AR | 22-10-00 | 1004-1104 |
| SP606 | SOLDER SLEEVE | AR | 22-10-00 | 1004-1104 |
| SP608 | SOLDER SLEEVE | AR | 22-10-00 | 1004-1104 |
| SP609 | SOLDER SLEEVE | AR | 22-10-00 | 1004-1104 |
| SP61 | SPLICE | AR | 73-30-00 | 1004-1104 |
| SP610 | SOLDER SLEEVE | AR | 34-54-21 | 1004-1104 |
| SP612 | SOLDER SLEEVE | AR | 22-10-00 | 1004-1104 |
| SP613 | SOLDER SLEEVE | AR | 22-10-00 | 1004-1104 |

| CODE | NOMENCLATURE | LOCATION | MANUAL REF | EFF. |
|---|---|---|---|---|
| SP614 | SOLDER SLEEVE | AR | 22-10-00 | 1004-1104 |
| SP615 | SOLDER SLEEVE | AR | 34-12-00 | 1004-1104 |
| SP617 | SOLDER SLEEVE | AR | 23-30-00 | 1004-1104 |
| SP618 | SOLDER SLEEVE | AR | 23-30-00 | 1004-1104 |
| SP619 | SOLDER SLEEVE | AR | 23-30-00 | 1004-1104 |
| SP62 | SPLICE | AR | 73-30-00 | 1004-1104 |
| SP620 | SOLDER SLEEVE | AR | 23-30-00 | 1004-1104 |
| SP621 | SOLDER SLEEVE | AR | 23-30-00 | 1004-1104 |
| SP622 | SOLDER SLEEVE | AR | 23-30-00 | 1004-1104 |
| SP623 | SOLDER SLEEVE | AR | 23-30-00 | 1004-1104 |
| SP624 | SOLDER SLEEVE | AR | 23-30-00 | 1004-1104 |
| SP625 | SOLDER SLEEVE | AR | 23-30-00 | 1004-1104 |
| SP626 | SOLDER SLEEVE | AR | 23-30-00 | 1004-1104 |
| SP627 | SOLDER SLEEVE | AR | 23-30-00 | 1004-1104 |
| SP628 | SOLDER SLEEVE | AR | 23-30-00 | 1004-1104 |
| SP629 | SOLDER SLEEVE | AR | 23-30-00 | 1004-1104 |
| SP63 | SPLICE | AR | 73-30-00 | 1004-1104 |
| SP630 | SPLICE | AR | 23-30-00 | 1004-1104 |
| SP634 | SOLDER SLEEVE | AR | 23-30-00 | 1004-1104 |
| SP635 | SOLDER SLEEVE | AR | 23-30-00 | 1004-1104 |
| SP639 | SOLDER SLEEVE | AR | 34-54-21 | 1004-1104 |
| SP64 | SPLICE | AR | 73-30-00 | 1004-1104 |
| SP640 | SOLDER SLEEVE | AR | 34-24-00 | 1004-1104 |
| SP641 | SOLDER SLEEVE | AR | 34-24-00 | 1004-1104 |
| SP642 | SOLDER SLEEVE | AR | 34-24-00 | 1004-1104 |
| SP643 | SOLDER SLEEVE | AR | 34-24-00 | 1004-1104 |
| SP644 | SOLDER SLEEVE | AR | 34-24-00 | 1004-1104 |
| SP645 | SOLDER SLEEVE | AR | 34-24-00 | 1004-1104 |
| SP646 | SOLDER SLEEVE | AR | 34-24-00 | 1004-1104 |
| SP647 | SOLDER SLEEVE | AR | 34-24-00 | 1004-1104 |
| SP648 | SOLDER SLEEVE | AR | 34-23-00 | 1004-1104 |
| SP649 | SOLDER SLEEVE | AR | 34-23-00 | 1004-1104 |
| SP65 | SPLICE | AR | 73-30-00 | 1004-1104 |
| SP650 | SOLDER SLEEVE | AR | 34-54-21 | 1004-1104 |
| SP651 | SOLDER SLEEVE | AR | 34-54-21 | 1004-1104 |
| SP652 | SOLDER SLEEVE | AR | 34-54-21 | 1004-1104 |
| SP654 | SOLDER SLEEVE | AR | 34-24-00 | 1004-1104 |
| SP655 | SOLDER SLEEVE | AR | 34-52-00 | 1004-1104 |
| SP656 | SOLDER SLEEVE | AR | 34-24-00 | 1004-1104 |
| SP657 | SOLDER SLEEVE | AR | 34-52-00 | 1004-1104 |
| SP658 | SOLDER SLEEVE | AR | 34-21-00 | 1004-1104 |

| CODE | NOMENCLATURE | LOCATION | MANUAL REF | EFF. |
|---|---|---|---|---|
| SP658 | SOLDER SLEEVE | AR | 34-22-00 | 1004-1104 |
| SP658 | SOLDER SLEEVE | AR | 34-28-00 | 1004-1104 |
| SP659 | SOLDER SLEEVE | AR | 34-24-00 | 1004-1104 |
| SP66 | SPLICE | AR | 73-30-00 | 1004-1104 |
| SP660 | SOLDER SLEEVE | AR | 34-23-00 | 1004-1104 |
| SP661 | SOLDER SLEEVE | AR | 34-23-00 | 1004-1104 |
| SP662 | SOLDER SLEEVE | AR | 34-23-00 | 1004-1104 |
| SP663 | SOLDER SLEEVE | AR | 34-23-00 | 1004-1104 |
| SP664 | SOLDER SLEEVE | AR | 34-23-00 | 1004-1104 |
| SP665 | SOLDER SLEEVE | AR | 34-23-00 | 1004-1104 |
| SP666 | SOLDER SLEEVE | AR | 34-23-00 | 1004-1104 |
| SP667 | SOLDER SLEEVE | AR | 34-23-00 | 1004-1104 |
| SP668 | SOLDER SLEEVE | AR | 34-23-00 | 1004-1104 |
| SP669 | SOLDER SLEEVE | AR | 34-23-00 | 1004-1104 |
| SP67 | SPLICE | AR | 73-30-00 | 1004-1104 |
| SP670 | SOLDER SLEEVE | AR | 34-23-00 | 1004-1104 |
| SP671 | SOLDER SLEEVE | AR | 34-23-00 | 1004-1104 |
| SP672 | SOLDER SLEEVE | AR | 34-23-00 | 1004-1104 |
| SP673 | SOLDER SLEEVE | AR | 34-23-00 | 1004-1104 |
| SP674 | SOLDER SLEEVE | AR | 34-23-00 | 1004-1104 |
| SP675 | SOLDER SLEEVE | AR | 34-23-00 | 1004-1104 |
| SP676 | SOLDER SLEEVE | AR | 34-23-00 | 1004-1104 |
| SP677 | SOLDER SLEEVE | AR | 34-23-00 | 1004-1104 |
| SP678 | SOLDER SLEEVE | AR | 34-23-00 | 1004-1104 |
| SP679 | SOLDER SLEEVE | AR | 34-23-00 | 1004-1104 |
| SP68 | SPLICE | AR | 29-10-00 | 1004-1104 |
| SP68 | SPLICE | AR | 29-30-00 | 1004-1104 |
| SP68 | SPLICE | AR | 32-30-00 | 1004-1104 |
| SP68 | SPLICE | AR | 32-60-00 | 1004-1104 |
| SP680 | SOLDER SLEEVE | AR | 34-23-00 | 1004-1104 |
| SP681 | SOLDER SLEEVE | AR | 34-23-00 | 1004-1104 |
| SP682 | SOLDER SLEEVE | AR | 34-23-00 | 1004-1104 |
| SP683 | SOLDER SLEEVE | AR | 34-23-00 | 1004-1104 |
| SP684 | SOLDER SLEEVE | AR | 34-23-00 | 1004-1104 |
| SP685 | SOLDER SLEEVE | AR | 34-23-00 | 1004-1104 |
| SP687 | SOLDER SLEEVE | AR | 22-10-00 | 1004-1104 |
| SP688 | SOLDER SLEEVE | AR | 22-10-00 | 1004-1104 |
| SP689 | SOLDER SLEEVE | AR | 22-10-00 | 1004-1104 |
| SP690 | SOLDER SLEEVE | AR | 22-10-00 | 1004-1104 |
| SP691 | SPLICE | AR | 22-10-00 | 1004-1104 |
| SP695 | SOLDER SLEEVE | AR | 34-23-00 | 1004-1104 |

| CODE | NOMENCLATURE | LOCATION | MANUAL REF | EFF. |
|---|---|---|---|---|
| SP696 | SOLDER SLEEVE | AR | 34-23-00 | 1004-1104 |
| SP697 | SOLDER SLEEVE | AR | 34-23-00 | 1004-1104 |
| SP698 | SOLDER SLEEVE | AR | 22-10-00 | 1004-1104 |
| SP699 | SOLDER SLEEVE | AR | 34-23-00 | 1004-1104 |
| SP700 | SOLDER SLEEVE | AR | 34-23-00 | 1004-1104 |
| SP701 | SOLDER SLEEVE | AR | 34-23-00 | 1004-1104 |
| SP702 | SOLDER SLEEVE | AR | 22-10-00 | 1004-1104 |
| SP703 | SOLDER SLEEVE | AR | 34-23-00 | 1004-1104 |
| SP704 | SOLDER SLEEVE | AR | 34-23-00 | 1004-1104 |
| SP705 | SOLDER SLEEVE | AR | 34-23-00 | 1004-1104 |
| SP706 | SOLDER SLEEVE | AR | 34-23-00 | 1004-1104 |
| SP707 | SOLDER SLEEVE | AR | 34-23-00 | 1004-1104 |
| SP708 | SOLDER SLEEVE | AR | 34-23-00 | 1004-1104 |
| SP709 | SOLDER SLEEVE | AR | 34-23-00 | 1004-1104 |
| SP710 | SOLDER SLEEVE | AR | 34-23-00 | 1004-1104 |
| SP711 | SOLDER SLEEVE | AR | 34-23-00 | 1004-1104 |
| SP712 | SOLDER SLEEVE | AR | 34-23-00 | 1004-1104 |
| SP713 | SOLDER SLEEVE | AR | 34-23-00 | 1004-1104 |
| SP714 | SOLDER SLEEVE | AR | 34-23-00 | 1004-1104 |
| SP715 | SOLDER SLEEVE | AR | 34-23-00 | 1004-1104 |
| SP716 | SOLDER SLEEVE | AR | 34-23-00 | 1004-1104 |
| SP717 | SOLDER SLEEVE | AR | 34-23-00 | 1004-1104 |
| SP718 | SOLDER SLEEVE | AR | 34-23-00 | 1004-1104 |
| SP719 | SOLDER SLEEVE | AR | 34-23-00 | 1004-1104 |
| SP720 | SOLDER SLEEVE | AR | 34-23-00 | 1004-1104 |
| SP721 | SOLDER SLEEVE | AR | 34-23-00 | 1004-1104 |
| SP722 | SOLDER SLEEVE | AR | 34-23-00 | 1004-1104 |
| SP723 | SOLDER SLEEVE | AR | 34-23-00 | 1004-1104 |
| SP724 | SOLDER SLEEVE | AR | 34-23-00 | 1004-1104 |
| SP725 | SOLDER SLEEVE | AR | 34-23-00 | 1004-1104 |
| SP726 | SOLDER SLEEVE | AR | 34-23-00 | 1004-1104 |
| SP727 | SOLDER SLEEVE | AR | 34-23-00 | 1004-1104 |
| SP728 | SOLDER SLEEVE | AR | 34-23-00 | 1004-1104 |
| SP729 | SOLDER SLEEVE | AR | 34-23-00 | 1004-1104 |
| SP73 | SPLICE | AR | 21-10-00 | 1004-1104 |
| SP73 | SPLICE | AR | 21-20-00 | 1004-1104 |
| SP73 | SPLICE | AR | 21-40-00 | 1004-1104 |
| SP730 | SOLDER SLEEVE | AR | 34-23-00 | 1004-1104 |
| SP731 | SOLDER SLEEVE | AR | 34-23-00 | 1004-1104 |
| SP732 | SOLDER SLEEVE | AR | 34-23-00 | 1004-1104 |
| SP733 | SOLDER SLEEVE | AR | 34-23-00 | 1004-1104 |

| CODE | NOMENCLATURE | LOCATION | MANUAL REF | EFF. |
|---|---|---|---|---|
| SP734 | SOLDER SLEEVE | AR | 34-23-00 | 1004-1104 |
| SP735 | SOLDER SLEEVE | AR | 34-23-00 | 1004-1104 |
| SP736 | SOLDER SLEEVE | AR | 34-23-00 | 1004-1104 |
| SP737 | SOLDER SLEEVE | AR | 34-23-00 | 1004-1104 |
| SP738 | SOLDER SLEEVE | AR | 34-23-00 | 1004-1104 |
| SP739 | SOLDER SLEEVE | AR | 34-23-00 | 1004-1104 |
| SP74 | SPLICE | AR | 30-22-00 | 1004-1104 |
| SP740 | SOLDER SLEEVE | AR | 34-23-00 | 1004-1104 |
| SP741 | SOLDER SLEEVE | AR | 34-23-00 | 1004-1104 |
| SP742 | SOLDER SLEEVE | AR | 34-23-00 | 1004-1104 |
| SP743 | SOLDER SLEEVE | AR | 34-23-00 | 1004-1104 |
| SP744 | SOLDER SLEEVE | AR | 34-23-00 | 1004-1104 |
| SP745 | SOLDER SLEEVE | AR | 34-23-00 | 1004-1104 |
| SP746 | SOLDER SLEEVE | AR | 34-23-00 | 1004-1104 |
| SP747 | SOLDER SLEEVE | AR | 34-23-00 | 1004-1104 |
| SP748 | SOLDER SLEEVE | AR | 34-23-00 | 1004-1104 |
| SP749 | SOLDER SLEEVE | AR | 34-23-00 | 1004-1104 |
| SP75 | SPLICE | AR | 21-10-00 | 1004-1104 |
| SP75 | SPLICE | AR | 21-20-00 | 1004-1104 |
| SP75 | SPLICE | AR | 21-40-00 | 1004-1104 |
| SP750 | SOLDER SLEEVE | AR | 34-23-00 | 1004-1104 |
| SP755 | SOLDER SLEEVE | AR | 34-23-00 | 1004-1104 |
| SP756 | SOLDER SLEEVE | AR | 34-23-00 | 1004-1104 |
| SP757 | SOLDER SLEEVE | AR | 34-23-00 | 1004-1104 |
| SP758 | SOLDER SLEEVE | AR | 34-23-00 | 1004-1104 |
| SP759 | SOLDER SLEEVE | AR | 34-23-00 | 1004-1104 |
| SP76 | SPLICE | AR | 21-31-00 | 1004-1104 |
| SP760 | SOLDER SLEEVE | AR | 34-23-00 | 1004-1104 |
| SP761 | SOLDER SLEEVE | AR | 34-23-00 | 1004-1104 |
| SP762 | SOLDER SLEEVE | AR | 34-23-00 | 1004-1104 |
| SP763 | SOLDER SLEEVE | AR | 34-23-00 | 1004-1104 |
| SP764 | SOLDER SLEEVE | AR | 34-23-00 | 1004-1104 |
| SP765 | SOLDER SLEEVE | AR | 34-23-00 | 1004-1104 |
| SP766 | SOLDER SLEEVE | AR | 34-23-00 | 1004-1104 |
| SP767 | SOLDER SLEEVE | AR | 34-23-00 | 1004-1104 |
| SP768 | SOLDER SLEEVE | AR | 34-23-00 | 1004-1104 |
| SP769 | SOLDER SLEEVE | AR | 34-23-00 | 1004-1104 |
| SP77 | SPLICE | AR | 77-11-00 | 1004-1104 |
| SP77 | SPLICE | AR | 79-31-00 | 1004-1104 |
| SP770 | SOLDER SLEEVE | AR | 34-23-00 | 1004-1104 |
| SP771 | SOLDER SLEEVE | AR | 34-23-00 | 1004-1104 |

| CODE | NOMENCLATURE | LOCATION | MANUAL REF | EFF. |
|---|---|---|---|---|
| SP772 | SOLDER SLEEVE | AR | 34-23-00 | 1004-1104 |
| SP773 | SOLDER SLEEVE | AR | 34-23-00 | 1004-1104 |
| SP774 | SOLDER SLEEVE | AR | 34-23-00 | 1004-1104 |
| SP775 | SOLDER SLEEVE | AR | 34-23-00 | 1004-1104 |
| SP776 | SOLDER SLEEVE | AR | 34-23-00 | 1004-1104 |
| SP777 | SOLDER SLEEVE | AR | 34-23-00 | 1004-1104 |
| SP778 | SOLDER SLEEVE | AR | 34-23-00 | 1004-1104 |
| SP779 | SOLDER SLEEVE | AR | 34-23-00 | 1004-1104 |
| SP78 | SPLICE | AR | 77-11-00 | 1004-1104 |
| SP78 | SPLICE | AR | 79-31-00 | 1004-1104 |
| SP780 | SOLDER SLEEVE | AR | 34-23-00 | 1004-1104 |
| SP781 | SOLDER SLEEVE | AR | 34-23-00 | 1004-1104 |
| SP782 | SOLDER SLEEVE | AR | 34-23-00 | 1004-1104 |
| SP783 | SOLDER SLEEVE | AR | 34-23-00 | 1004-1104 |
| SP784 | SOLDER SLEEVE | AR | 34-23-00 | 1004-1104 |
| SP785 | SOLDER SLEEVE | AR | 34-23-00 | 1004-1104 |
| SP786 | SOLDER SLEEVE | AR | 34-23-00 | 1004-1104 |
| SP787 | SOLDER SLEEVE | AR | 34-23-00 | 1004-1104 |
| SP788 | SOLDER SLEEVE | AR | 34-23-00 | 1004-1104 |
| SP789 | SOLDER SLEEVE | AR | 34-23-00 | 1004-1104 |
| SP79 | SPLICE | AR | 33-40-00 | 1004-1104 |
| SP790 | SOLDER SLEEVE | AR | 34-23-00 | 1004-1104 |
| SP791 | SOLDER SLEEVE | AR | 34-23-00 | 1004-1104 |
| SP792 | SOLDER SLEEVE | AR | 34-23-00 | 1004-1104 |
| SP793 | SOLDER SLEEVE | AR | 34-23-00 | 1004-1104 |
| SP794 | SOLDER SLEEVE | AR | 34-23-00 | 1004-1104 |
| SP795 | SOLDER SLEEVE | AR | 34-23-00 | 1004-1104 |
| SP796 | SOLDER SLEEVE | AR | 34-23-00 | 1004-1104 |
| SP797 | SOLDER SLEEVE | AR | 34-23-00 | 1004-1104 |
| SP798 | SOLDER SLEEVE | AR | 34-23-00 | 1004-1104 |
| SP799 | SOLDER SLEEVE | AR | 34-23-00 | 1004-1104 |
| SP800 | SOLDER SLEEVE | AR | 34-23-00 | 1004-1104 |
| SP801 | SOLDER SLEEVE | AR | 34-23-00 | 1004-1104 |
| SP802 | SOLDER SLEEVE | AR | 34-23-00 | 1004-1104 |
| SP803 | SOLDER SLEEVE | AR | 34-23-00 | 1004-1104 |
| SP805 | SOLDER SLEEVE | AR | 34-21-00 | 1004-1104 |
| SP805 | SOLDER SLEEVE | AR | 34-22-00 | 1004-1104 |
| SP805 | SOLDER SLEEVE | AR | 34-28-00 | 1004-1104 |
| SP806 | SOLDER SLEEVE | AR | 34-21-00 | 1004-1104 |
| SP806 | SOLDER SLEEVE | AR | 34-22-00 | 1004-1104 |
| SP807 | SOLDER SLEEVE | AR | 34-21-00 | 1004-1104 |

| CODE | NOMENCLATURE | LOCATION | MANUAL REF | EFF. |
|---|---|---|---|---|
| SP807 | SOLDER SLEEVE | AR | 34-22-00 | 1004-1104 |
| SP807 | SOLDER SLEEVE | AR | 34-28-00 | 1004-1104 |
| SP808 | SOLDER SLEEVE | AR | 34-51-00 | 1004-1104 |
| SP809 | SOLDER SLEEVE | AR | 34-51-00 | 1004-1104 |
| SP810 | SOLDER SLEEVE | AR | 34-51-00 | 1004-1104 |
| SP811 | SOLDER SLEEVE | AR | 34-23-00 | 1004-1104 |
| SP812 | SOLDER SLEEVE | AR | 34-23-00 | 1004-1104 |
| SP813 | SOLDER SLEEVE | AR | 34-51-00 | 1004-1104 |
| SP814 | SOLDER SLEEVE | AR | 34-53-00 | 1004-1104 |
| SP815 | SOLDER SLEEVE | AR | 34-53-00 | 1004-1104 |
| SP816 | SOLDER SLEEVE | AR | 34-53-00 | 1004-1104 |
| SP817 | SOLDER SLEEVE | AR | 22-10-00 | 1004-1104 |
| SP818 | SOLDER SLEEVE | AR | 22-10-00 | 1004-1104 |
| SP819 | SOLDER SLEEVE | AR | 22-10-00 | 1004-1104 |
| SP82 | SPLICE | AR | 33-40-00 | 1004-1104 |
| SP820 | SOLDER SLEEVE | AR | 34-42-00 | 1004-1104 |
| SP821 | SOLDER SLEEVE | AR | 34-42-00 | 1004-1104 |
| SP823 | SOLDER SLEEVE | AR | 34-12-00 | 1004-1104 |
| SP824 | SOLDER SLEEVE | AR | 34-12-00 | 1004-1104 |
| SP825 | SOLDER SLEEVE | AR | 34-24-00 | 1004-1104 |
| SP826 | SOLDER SLEEVE | AR | 34-21-00 | 1004-1104 |
| SP826 | SOLDER SLEEVE | AR | 34-22-00 | 1004-1104 |
| SP826 | SOLDER SLEEVE | AR | 34-28-00 | 1004-1104 |
| SP827 | SOLDER SLEEVE | AR | 34-21-00 | 1004-1104 |
| SP827 | SOLDER SLEEVE | AR | 34-22-00 | 1004-1104 |
| SP827 | SOLDER SLEEVE | AR | 34-28-00 | 1004-1104 |
| SP828 | SOLDER SLEEVE | AR | 34-21-00 | 1004-1104 |
| SP828 | SOLDER SLEEVE | AR | 34-22-00 | 1004-1104 |
| SP828 | SOLDER SLEEVE | AR | 34-28-00 | 1004-1104 |
| SP829 | SOLDER SLEEVE | AR | 34-21-00 | 1004-1104 |
| SP829 | SOLDER SLEEVE | AR | 34-22-00 | 1004-1104 |
| SP829 | SOLDER SLEEVE | AR | 34-28-00 | 1004-1104 |
| SP83 | SPLICE | AR | 33-40-00 | 1004-1104 |
| SP830 | SOLDER SLEEVE | AR | 34-21-00 | 1004-1104 |
| SP830 | SOLDER SLEEVE | AR | 34-22-00 | 1004-1104 |
| SP830 | SOLDER SLEEVE | AR | 34-28-00 | 1004-1104 |
| SP831 | SOLDER SLEEVE | AR | 34-52-00 | 1004-1104 |
| SP832 | SOLDER SLEEVE | AR | 34-51-00 | 1004-1104 |
| SP833 | SOLDER SLEEVE | AR | 34-51-00 | 1004-1104 |
| SP835 | SOLDER SLEEVE | AR | 34-51-00 | 1004-1104 |
| SP836 | SOLDER SLEEVE | AR | 34-24-00 | 1004-1104 |

| CODE | NOMENCLATURE | LOCATION | MANUAL REF | EFF. |
|---|---|---|---|---|
| SP838 | SPLICE | AR | 22-11-00 | 1004-1104 |
| SP839 | SPLICE | AR | 22-11-00 | 1004-1104 |
| SP84 | SPLICE | AR | 33-40-00 | 1004-1104 |
| SP840 | SPLICE | AR | 22-11-00 | 1004-1104 |
| SP841 | SPLICE | AR | 22-11-00 | 1004-1104 |
| SP842 | SPLICE | AR | 22-11-00 | 1004-1104 |
| SP843 | SPLICE | AR | 22-11-00 | 1004-1104 |
| SP844 | SPLICE | AR | 22-11-00 | 1004-1104 |
| SP845 | SPLICE | AR | 22-11-00 | 1004-1104 |
| SP846 | SOLDER SLEEVE | AR | 22-11-00 | 1004-1104 |
| SP847 | SOLDER SLEEVE | AR | 22-11-00 | 1004-1104 |
| SP848 | SPLICE | AR | 22-11-00 | 1004-1104 |
| SP85 | SPLICE | AR | 21-10-00 | 1004-1104 |
| SP85 | SPLICE | AR | 21-20-00 | 1004-1104 |
| SP85 | SPLICE | AR | 21-40-00 | 1004-1104 |
| SP853 | SOLDER SLEEVE | AR | 34-51-00 | 1004-1104 |
| SP854 | SOLDER SLEEVE | AR | 34-51-00 | 1004-1104 |
| SP855 | SOLDER SLEEVE | AR | 34-51-00 | 1004-1104 |
| SP856 | SOLDER SLEEVE | AR | 34-54-00 | 1004-1104 |
| SP856 | SOLDER SLEEVE | AR | 34-54-20 | 1004-1104 |
| SP856 | SOLDER SLEEVE | AR | 34-54-21 | 1004-1104 |
| SP857 | SOLDER SLEEVE | AR | 34-54-00 | 1004-1104 |
| SP857 | SOLDER SLEEVE | AR | 34-54-20 | 1004-1104 |
| SP857 | SOLDER SLEEVE | AR | 34-54-21 | 1004-1104 |
| SP858 | SOLDER SLEEVE | AR | 34-41-00 | 1004-1104 |
| SP859 | SOLDER SLEEVE | AR | 34-41-00 | 1004-1104 |
| SP86 | SPLICE | AR | 21-10-00 | 1004-1104 |
| SP86 | SPLICE | AR | 21-20-00 | 1004-1104 |
| SP86 | SPLICE | AR | 21-40-00 | 1004-1104 |
| SP860 | SOLDER SLEEVE | AR | 34-21-00 | 1004-1104 |
| SP860 | SOLDER SLEEVE | AR | 34-22-00 | 1004-1104 |
| SP860 | SOLDER SLEEVE | AR | 34-28-00 | 1004-1104 |
| SP861 | SOLDER SLEEVE | AR | 34-21-00 | 1004-1104 |
| SP861 | SOLDER SLEEVE | AR | 34-22-00 | 1004-1104 |
| SP861 | SOLDER SLEEVE | AR | 34-28-00 | 1004-1104 |
| SP862 | SOLDER SLEEVE | AR | 34-21-00 | 1004-1104 |
| SP862 | SOLDER SLEEVE | AR | 34-22-00 | 1004-1104 |
| SP862 | SOLDER SLEEVE | AR | 34-28-00 | 1004-1104 |
| SP863 | SOLDER SLEEVE | AR | 34-12-00 | 1004-1104 |
| SP864 | SOLDER SLEEVE | AR | 34-12-00 | 1004-1104 |
| SP865 | SOLDER SLEEVE | AR | 34-12-00 | 1004-1104 |

| CODE | NOMENCLATURE | LOCATION | MANUAL REF | EFF. |
|---|---|---|---|---|
| SP866 | SOLDER SLEEVE | AR | 34-12-00 | 1004-1104 |
| SP867 | SOLDER SLEEVE | AR | 34-12-00 | 1004-1104 |
| SP868 | SOLDER SLEEVE | AR | 34-12-00 | 1004-1104 |
| SP87 | SPLICE | AR | 33-40-00 | 1004-1104 |
| SP872 | SOLDER SLEEVE | AR | 34-51-00 | 1004-1104 |
| SP873 | SOLDER SLEEVE | AR | 34-51-00 | 1004-1104 |
| SP874 | SOLDER SLEEVE | AR | 34-54-21 | 1004-1104 |
| SP875 | SOLDER SLEEVE | AR | 34-54-21 | 1004-1104 |
| SP876 | SOLDER SLEEVE | AR | 34-51-00 | 1004-1104 |
| SP877 | SOLDER SLEEVE | AR | 34-51-00 | 1004-1104 |
| SP879 | SOLDER SLEEVE | AR | 34-54-00 | 1004-1104 |
| SP879 | SOLDER SLEEVE | AR | 34-54-20 | 1004-1104 |
| SP879 | SOLDER SLEEVE | AR | 34-54-21 | 1004-1104 |
| SP88 | SPLICE | AR | 33-40-00 | 1004-1104 |
| SP880 | SOLDER SLEEVE | AR | 34-54-00 | 1004-1104 |
| SP880 | SOLDER SLEEVE | AR | 34-54-20 | 1004-1104 |
| SP880 | SOLDER SLEEVE | AR | 34-54-21 | 1004-1104 |
| SP881 | SOLDER SLEEVE | AR | 34-54-00 | 1004-1104 |
| SP882 | SOLDER SLEEVE | AR | 34-54-00 | 1004-1104 |
| SP883 | SOLDER SLEEVE | AR | 34-41-00 | 1004-1104 |
| SP884 | SOLDER SLEEVE | AR | 34-41-00 | 1004-1104 |
| SP885 | SOLDER SLEEVE | AR | 34-41-00 | 1004-1104 |
| SP886 | SOLDER SLEEVE | AR | 34-41-00 | 1004-1104 |
| SP887 | SOLDER SLEEVE | AR | 34-23-00 | 1004-1104 |
| SP888 | SOLDER SLEEVE | AR | 34-21-00 | 1004-1104 |
| SP888 | SOLDER SLEEVE | AR | 34-22-00 | 1004-1104 |
| SP888 | SOLDER SLEEVE | AR | 34-28-00 | 1004-1104 |
| SP889 | SOLDER SLEEVE | AR | 34-21-00 | 1004-1104 |
| SP889 | SOLDER SLEEVE | AR | 34-22-00 | 1004-1104 |
| SP889 | SOLDER SLEEVE | AR | 34-28-00 | 1004-1104 |
| SP89 | SOLDER SLEEVE | AR | 33-40-00 | 1004-1104 |
| SP890 | SOLDER SLEEVE | AR | 34-21-00 | 1004-1104 |
| SP890 | SOLDER SLEEVE | AR | 34-22-00 | 1004-1104 |
| SP890 | SOLDER SLEEVE | AR | 34-28-00 | 1004-1104 |
| SP891 | SOLDER SLEEVE | AR | 34-53-00 | 1004-1104 |
| SP892 | SOLDER SLEEVE | AR | 34-53-00 | 1004-1104 |
| SP893 | SOLDER SLEEVE | AR | 34-53-00 | 1004-1104 |
| SP894 | SOLDER SLEEVE | AR | 34-51-00 | 1004-1104 |
| SP895 | SOLDER SLEEVE | AR | 34-12-00 | 1004-1104 |
| SP896 | SOLDER SLEEVE | AR | 34-12-00 | 1004-1104 |
| SP897 | SOLDER SLEEVE | AR | 34-12-00 | 1004-1104 |

| CODE | NOMENCLATURE | LOCATION | MANUAL REF | EFF. |
|---|---|---|---|---|
| SP898 | SOLDER SLEEVE | AR | 34-12-00 | 1004-1104 |
| SP899 | SOLDER SLEEVE | AR | 34-12-00 | 1004-1104 |
| SP9 | SPLICE | AR | 28-41-00 | 1004-1104 |
| SP90 | SOLDER SLEEVE | AR | 33-40-00 | 1004-1104 |
| SP900 | SOLDER SLEEVE | AR | 34-23-00 | 1004-1104 |
| SP901 | SOLDER SLEEVE | AR | 34-23-00 | 1004-1104 |
| SP93 | SPLICE | AR | 34-43-00 | 1004-1104 |
| SP944 | SOLDER SLEEVE | AR | 34-52-00 | 1004-1104 |
| SP945 | SOLDER SLEEVE | AR | 34-52-00 | 1004-1104 |
| SP946 | SOLDER SLEEVE | AR | 34-52-00 | 1004-1104 |
| SP947 | SOLDER SLEEVE | AR | 34-53-00 | 1004-1104 |
| SP948 | SOLDER SLEEVE | AR | 34-21-00 | 1004-1104 |
| SP948 | SOLDER SLEEVE | AR | 34-22-00 | 1004-1104 |
| SP948 | SOLDER SLEEVE | AR | 34-28-00 | 1004-1104 |
| SP951 | SPLICE | AR | 34-54-21 | 1004-1104 |
| SP952 | SOLDER SLEEVE | AR | 34-53-00 | 1004-1104 |
| SP953 | SOLDER SLEEVE | AR | 34-21-00 | 1004-1104 |
| SP953 | SOLDER SLEEVE | AR | 34-22-00 | 1004-1104 |
| SP953 | SOLDER SLEEVE | AR | 34-28-00 | 1004-1104 |
| SP954 | SOLDER SLEEVE | AR | 34-52-00 | 1004-1104 |
| SP955 | SOLDER SLEEVE | AR | 34-52-00 | 1004-1104 |
| SP957 | SOLDER SLEEVE | AR | 34-52-00 | 1004-1104 |
| SP971 | SOLDER SLEEVE | AR | 23-50-00 | 1004-1104 |
| SP972 | SOLDER SLEEVE | AR | 23-50-00 | 1004-1104 |
| SP973 | SOLDER SLEEVE | AR | 23-50-00 | 1004-1104 |
| SP974 | SOLDER SLEEVE | AR | 23-50-00 | 1004-1104 |
| SP975 | SOLDER SLEEVE | AR | 23-50-00 | 1004-1104 |
| SP976 | SOLDER SLEEVE | AR | 23-50-00 | 1004-1104 |
| SP977 | SOLDER SLEEVE | AR | 23-50-00 | 1004-1104 |
| SP978 | SOLDER SLEEVE | AR | 23-50-00 | 1004-1104 |
| SP985 | SOLDER SLEEVE | AR | 34-51-00 | 1004-1104 |
| SP986 | SOLDER SLEEVE | AR | 34-51-00 | 1004-1104 |
| SP987 | SOLDER SLEEVE | AR | 34-43-00 | 1004-1104 |
| SP988 | SOLDER SLEEVE | AR | 34-43-00 | 1004-1104 |
| SP990 | SOLDER SLEEVE | AR | 34-43-00 | 1004-1104 |
| SP991 | SOLDER SLEEVE | AR | 34-43-00 | 1004-1104 |
| SP992 | SOLDER SLEEVE | AR | 34-43-00 | 1004-1104 |
| SP994 | SOLDER SLEEVE | AR | 34-43-00 | 1004-1104 |
| SP995 | SOLDER SLEEVE | AR | 34-43-00 | 1004-1104 |
| SP996 | SPLICE | AR | 34-43-00 | 1004-1104 |
| SP997 | SPLICE | AR | 34-43-00 | 1004-1104 |

| CODE | NOMENCLATURE | LOCATION | MANUAL REF | EFF. |
|---|---|---|---|---|
| SP999 | SOLDER SLEEVE | AR | 34-43-00 | 1004-1104 |
| SPAT1 | JUNCTION | AR | 33-12-00 | 1004-1104 |
| SPAT10 | SOLDERED CONTACT | AR | 33-12-00 | 1004-1104 |
| SPAT11 | SODERED CONTACT | AR | 33-12-00 | 1004-1104 |
| SPAT12 | SOLDERED CONTACT | AR | 33-12-00 | 1004-1104 |
| SPAT13 | JUNCTION | AR | 33-12-00 | 1004-1104 |
| SPAT14 | JUNCTION | AR | 33-12-00 | 1004-1104 |
| SPAT15 | JUNCTION | AR | 33-25-00 | 1004-1104 |
| SPAT16 | SOLDERED CONTACT | AR | 33-25-00 | 1004-1104 |
| SPAT17 | JUNCTION | AR | 33-25-00 | 1004-1104 |
| SPAT18 | SOLDERED CONTACT | AR | 33-25-00 | 1004-1104 |
| SPAT19 | JUNCTION | AR | 33-25-00 | 1004-1104 |
| SPAT2 | SOLDERED CONTACT | AR | 33-12-00 | 1004-1104 |
| SPAT20 | SOLDERED CONTACT | AR | 33-25-00 | 1004-1104 |
| SPAT3 | SOLDERED CONTACT | AR | 33-12-00 | 1004-1104 |
| SPAT4 | JUNCTION | AR | 33-12-00 | 1004-1104 |
| SPAT5 | JUNCTION | AR | 33-12-00 | 1004-1104 |
| SPAT6 | SOLDERED CONTACT | AR | 33-12-00 | 1004-1104 |
| SPAT7 | JUNCTION | AR | 33-12-00 | 1004-1104 |
| SPAT8 | JUNCTION | AR | 33-12-00 | 1004-1104 |
| SPAT9 | JUNCTION | AR | 33-12-00 | 1004-1104 |
| TB10 | TERMINAL BOARD | 216 | 24-61-00 | 1004-1104 |
| TB10 | TERMINAL BOARD | 216 | 31-12-60 | 1004-1104 |
| TB1601 | TERMINAL BOARD | 232 | 33-21-10 | 1004-1104 |
| TB1601 | TERMINAL BOARD | 232 | 33-21-20 | 1004-1104 |
| TB1601 | TERMINAL BOARD | 232 | 33-21-50 | 1004-1104 |
| TB1601 | TERMINAL BOARD | 232 | 33-21-70 | 1004-1104 |
| TB1601 | TERMINAL BOARD | 232 | 33-21-80 | 1004-1104 |
| TB1602 | TERMINAL BOARD | 232 | 25-42-00 | 1004-1104 |
| TB1602 | TERMINAL BOARD | 232 | 33-24-00 | 1004-1104 |
| TB1602 | TERMINAL BOARD | 232 | 33-25-00 | 1004-1104 |
| TB24 | TERMINAL BOARD | 272 | 28-20-00 | 1004-1104 |
| TB24 | TERMINAL BOARD | 272 | 29-10-00 | 1004-1104 |
| TB24 | TERMINAL BOARD | 272 | 29-30-00 | 1004-1104 |
| TB24 | TERMINAL BOARD | 272 | 32-30-00 | 1004-1104 |
| TB24 | TERMINAL BOARD | 272 | 32-60-00 | 1004-1104 |
| TB25 | TERMINAL BOARD | 271 | 28-20-00 | 1004-1104 |
| TB25 | TERMINAL BOARD | 271 | 29-10-00 | 1004-1104 |
| TB25 | TERMINAL BOARD | 271 | 29-30-00 | 1004-1104 |
| TB25 | TERMINAL BOARD | 271 | 32-30-00 | 1004-1104 |
| TB25 | TERMINAL BOARD | 271 | 32-60-00 | 1004-1104 |

| CODE | NOMENCLATURE | LOCATION | MANUAL REF | EFF. |
|---|---|---|---|---|
| TB3 | TERMINAL BOARD | 231-CKPT | 23-13-10 | 1004-1104 |
| TB3 | TERMINAL BOARD | 231-CKPT | 23-13-20 | 1004-1104 |
| TB3 | TERMINAL BOARD | 231-CKPT | 23-14-00 | 1004-1104 |
| TB3 | TERMINAL BOARD | 231-CKPT | 23-70-00 | 1004-1104 |
| TB3 | TERMINAL BOARD | 231-CKPT | 31-21-00 | 1004-1104 |
| TB3 | TERMINAL BOARD | 231-CKPT | 33-10-10 | 1004-1104 |
| TB3 | TERMINAL BOARD | 231-CKPT | 33-10-20 | 1004-1104 |
| TB3 | TERMINAL BOARD | 231-CKPT | 34-10-00 | 1004-1104 |
| TB3 | TERMINAL BOARD | 231-CKPT | 34-56-00 | 1004-1104 |
| TB3 | TERMINAL BOARD | 231-CKPT | 34-59-10 | 1004-1104 |
| TB3 | TERMINAL BOARD | 231-CKPT | 34-59-20 | 1004-1104 |
| TB3 | TERMINAL BOARD | 231-CKPT | 34-59-30 | 1004-1104 |
| TB3 | TERMINAL BOARD | 231-CKPT | 34-59-40 | 1004-1104 |
| TB3 | TERMINAL BOARD | 231-CKPT | 34-59-60 | 1004-1104 |
| TB3 | TERMINAL BOARD | 231-CKPT | 34-59-70 | 1004-1104 |
| TB3 | TERMINAL BOARD | 231-CKPT | 34-59-80 | 1004-1104 |
| TB3 | TERMINAL BOARD | 231-CKPT | 34-59-90 | 1004-1104 |
| TB34 | TERMINAL BOARD | 621 | 30-11-00 | 1004-1104 |
| TB35 | TERMINAL BOARD | 521 | 30-11-00 | 1004-1104 |
| TB36 | TERMINAL BOARD | 662 | 30-12-00 | 1004-1104 |
| TB37 | TERMINAL BOARD | 562 | 30-12-00 | 1004-1104 |
| TB38 | TERMINAL BOARD | AFT FS6000 | 26-10-00 | 1004-1104 |
| TB38 | TERMINAL BOARD | AFT FS6000 | 77-10-00 | 1004-1104 |
| TB38 | TERMINAL BOARD | AFT FS6000 | 77-11-00 | 1004-1104 |
| TB38 | TERMINAL BOARD | AFT FS6000 | 79-31-00 | 1004-1104 |
| TB39 | TERMINAL BOARD | AFT FS6000 | 26-10-00 | 1004-1104 |
| TB39 | TERMINAL BOARD | AFT FS6000 | 77-10-00 | 1004-1104 |
| TB39 | TERMINAL BOARD | AFT FS6000 | 77-11-00 | 1004-1104 |
| TB39 | TERMINAL BOARD | AFT FS6000 | 79-31-00 | 1004-1104 |
| TB40 | TERMINAL BOARD | FS 1130 | 21-41-00 | 1004-1104 |
| TB40 | TERMINAL BOARD | FS 1130 | 21-60-00 | 1004-1104 |
| TB40 | TERMINAL BOARD | FS 1130 | 33-10-20 | 1004-1104 |
| TB40 | TERMINAL BOARD | FS 1130 | 35-10-00 | 1004-1104 |
| TB41 | TERMINAL BOARD | FS 1130 | 33-10-10 | 1004-1104 |
| TB41 | TERMINAL BOARD | FS 1130 | 33-26-00 | 1004-1104 |
| TB41 | TERMINAL BOARD | FS 1130 | 35-10-00 | 1004-1104 |
| TB42 | TERMINAL BOARD | FS 8345 R | 21-52-00 | 1004-1104 |
| TB44 | TERMINAL BOARD | 226 | 33-10-20 | 1004-1104 |
| TB45 | TERMINAL BOARD | 282 | 21-52-00 | 1004-1104 |
| TB45 | TERMINAL BOARD | 282 | 31-53-00 | 1004-1104 |
| TB46 | TERMINAL BOARD | 111 | 21-51-00 | 1004-1104 |

| CODE | NOMENCLATURE | LOCATION | MANUAL REF | EFF. |
|---|---|---|---|---|
| TB600 | TERMINAL BOARD | 231 & 241 | 23-30-00 | 1004-1104 |
| TB600 | TERMINAL BOARD | 241 | 23-30-00 | 1004-1104 |
| TB7 | TERMINAL BOARD | 215 | 24-61-00 | 1004-1104 |
| TB7 | TERMINAL BOARD | 215 | 31-12-50 | 1004-1104 |
| TC1 | THERMOCOUPLE | R-ENGINE | 77-20-00 | 1004-1104 |
| TC2 | THERMOCOUPLE | L-ENGINE | 77-20-00 | 1004-1104 |
| TJ600 | CONTACT(20/24) | TBD | 34-54-21 | 1004-1104 |
| TR5017 | ELT Trasmitter | 340 | 25-63-00 | 1104-1104 |
| TR601 | RCV/TRANSMITTER-PRI COM | 114 | 23-11-20 | 1004-1104 |
| TR602 | RCV/TRANSMITTER-SEC COM | 113 | 23-12-20 | 1004-1104 |
| TR602 | RCV/TRANSMITTER-SEC COM | 281 | 23-12-20 | 1004-1104 |
| TR603 | TRANSPONDER | 242 | 34-54-00 | 1004-1104 |
| TR603 | TRANSPONDER | 242 | 34-54-10 | 1004-1104 |
| TR604 | TRANSPONDER-SEC | 114 | 34-43-00 | 1004-1104 |
| TR604 | TRANSPONDER-SEC | 232 VANITY | 34-43-00 | 1004-1104 |
| TR604 | TRANSPONDER-SEC | 114 | 34-54-00 | 1004-1104 |
| TR604 | TRANSPONDER-SEC | 232 VANITY | 34-54-00 | 1004-1104 |
| TR604 | TRANSPONDER-SEC | 114 | 34-54-20 | 1004-1104 |
| TR604 | TRANSPONDER-SEC | 232 VANITY | 34-54-20 | 1004-1104 |
| TR604 | TRANSPONDER-SEC | 114 | 34-54-21 | 1004-1104 |
| TR604 | TRANSPONDER-SEC | 232 VANITY | 34-54-21 | 1004-1104 |
| TR605 | TRANSCEIVER-DME | 113 | 34-51-00 | 1004-1104 |
| TR605 | TRANSCEIVER-DME | 113 | 34-51-10 | 1004-1104 |
| TR605 | TRANSCEIVER-DME | 113 | 34-54-10 | 1004-1104 |
| TR605 | TRANSCEIVER-DME | 113 | 34-54-21 | 1004-1104 |
| TR605 | TRANSCEIVER-DME | 113 | 34-54-30 | 1004-1104 |
| TR605 | TRANSCEIVER-DME | 113 | 34-54-40 | 1004-1104 |
| TR605 | TRANSCEIVER-DME | 113 | 34-56-00 | 1004-1104 |
| TR605 | TRANSCEIVER-DME | 113 | 34-59-10 | 1004-1104 |
| TR605 | TRANSCEIVER-DME | 113 | 34-59-20 | 1004-1104 |
| TR605 | TRANSCEIVER-DME | 113 | 34-59-30 | 1004-1104 |
| TR605 | TRANSCEIVER-DME | 113 | 34-59-40 | 1004-1104 |
| TR605 | TRANSCEIVER-DME | 113 | 34-59-60 | 1004-1104 |
| TR605 | TRANSCEIVER-DME | 113 | 34-59-70 | 1004-1104 |
| TR605 | TRANSCEIVER-DME | 113 | 34-59-80 | 1004-1104 |
| TR605 | TRANSCEIVER-DME | 113 | 34-59-90 | 1004-1104 |
| TR606 | TRANSCEIVER-DME2 | 232 | 34-57-00 | 1004-1104 |
| TR607 | ANTENNA-RCVR RDR | 119 | 34-41-00 | 1004-1104 |
| TR607 | ANTENNA-RCVR RDR | 119 | 34-44-00 | 1004-1104 |
| TR608 | TRANSCEIVER-HF-SSB | 281 | 23-13-10 | 1004-1104 |
| TR608 | TRANSCEIVER-HF-SSB | 282 | 23-13-10 | 1004-1104 |

| CODE | NOMENCLATURE | LOCATION | MANUAL REF | EFF. |
|---|---|---|---|---|
| TR608 | TRANSCEIVER-HF-SSB | 281 | 23-13-20 | 1004-1104 |
| TR608 | TRANSCEIVER-HF-SSB | 282 | 23-13-20 | 1004-1104 |
| TR613 | TRANSCEIVER-VHF/FM HI BAND | 281 | 23-14-00 | 1004-1104 |
| TR614 | TDR-94 | 114 | 34-54-20 | 1004-1104 |
| TR614 | TDR-94 | 114 | 34-54-30 | 1004-1104 |
| TR614 | TDR-94 | 114 | 34-54-40 | 1004-1104 |
| TR619 | TDR-94D | TBD | 34-54-21 | 1004-1104 |
| TR701 | ELT TRASMITTER | 340 | 25-61-00 | 1004-1104 |
| TR702 | XMTR-RCV-COMPUTER (TCAS) | 232 VANITY | 34-43-00 | 1004-1104 |
| TR702 | XMTR-RCV-COMPUTER (TCAS) | 232 VANITY | 34-45-00 | 1004-1104 |
| TR703 | DATA CARD DC67 | TBD | 34-44-00 | 1004-1104 |
| TR703 | DATA CARD DC67 | TBD | 34-45-00 | 1004-1104 |

INTENTIONALLY LEFT BLANK

# CROSS REFERENCE LIST

## 1. General

In order to make easier locating the equipments two cross reference lists are provided in this section: a "Code to Part Number List" and a "Part Number to Code List".

## 2. Code to Part Number List

| CODE | PART NUMBER | EFF. | CODE | PART NUMBER | EFF. |
|---|---|---|---|---|---|
| AE1700 | 653-1-50 | 1004-1104 | AE633 | 071-01274-0002 | 1004-1104 |
| AE1700-E | 653-512-15 | 1004-1104 | AE634 | 066-04011-0003 | 1004-1104 |
| AE601 | 622-6521-013 | 1004-1104 | AE634 | 066-04011-0039 | 1004-1104 |
| AE602 | 622-6521-013 | 1004-1104 | AE635 | 622-6522-013 | 1004-1104 |
| AE603 | 622-6520-005 | 1004-1033 | AE636 | 066-04012-0032 | 1004-1104 |
| AE603 | 822-1120-005 | 1034-1104 | AE636 | 066-04013-0032 | 1004-1104 |
| AE604 | 622-6520-005 | 1004-1033 | AE637 | 80-118232-401 | 1004-1015 |
| AE604 | 822-1120-005 | 1034-1104 | AE637 | 80-118316-401 | 1016-1104 |
| AE605 | 622-6523-005 | 1004-1104 | AE639 | 80K118341-401 | 1004-1104 |
| AE607 | 622-6590-001 | 1004-1104 | AE640 | 622-8679-002 | 1004-1033 |
| AE609 | 622-6522-005 | 1004-1104 | AE640 | 622-8679-008 | 1004-1104 |
| AE619 | 990-3334-382 | 1066-1104 | AE640 | 622-8679-014 | 1034-1104 |
| AE619 | 990-3334-383 | 1066-1104 | AE641 | 622-8678-002 | 1004-1033 |
| AE619 | B1035-JHMB-HXU7 | 1004-1104 | AE641 | 622-8678-008 | 1004-1104 |
| AE619 | B1035-JHMJ-HUJ7 | 1004-1065 | AE641 | 622-8678-014 | 1034-1104 |
| AE619 | B1035-JPMJ-HUJ7 | 1004-1104 | AE643 | 622-8051-002 | 1004-1058 |
| AE619 | M1035JHMBHVV7 | 1004-1065 | AE643 | 622-8692-003 | 1004-1058 |
| AE620 | 990-3334-382 | 1066-1104 | AE643 | 822-0370-460 | 1059-1104 |
| AE620 | 990-3334-383 | 1066-1104 | AE645 | 622-9116-014 | 1004-1104 |
| AE620 | B1035-JHMB-HXU7 | 1004-1104 | AE646 | 622-8393-004 | 1004-1104 |
| AE620 | B1035-JHMJ-HUJ7 | 1004-1065 | AE646 | 622-8393-014 | 1019-1104 |
| AE620 | B1035-JPMJ-HUJ7 | 1004-1104 | AE646 | 622-9304-004 | 1004-1104 |
| AE620 | M1035JHMBHVV7 | 1004-1065 | AE646 | 622-9304-014 | 1019-1104 |
| AE621 | DMH21-1 | 1004-1104 | AE647 | 622-6174-001 | 1004-1104 |
| AE622 | DMH24-1 | 1004-1104 | AE648 | 622-6174-001 | 1004-1104 |
| AE623 | 270-0930-010 | 1004-1104 | AE649 | 622-2855-001 | 1004-1033 |
| AE626 | 501-1482-01 | 1004-1104 | AE649 | 622-2855-011 | 1034-1104 |
| AE627 | 622-6019-001 | 1004-1104 | AE650 | 622-6199-001 | 1004-1104 |
| AE628 | 229-0324-010 | 1004-1104 | AE651 | 80K118440-401 | 1004-1104 |
| AE629 | 622-7890-018 | 1004-1104 | AE652 | 622-6200-003 | 1004-1104 |
| AE630 | 622-5734-001 | 1004-1104 | AE653 | 80K118487-401 | 1004-1104 |
| AE631 | 622-5734-001 | 1004-1104 | AE656 | 229-0324-020 | 1004-1104 |
| AE632 | 622-5734-001 | 1004-1104 | AE657 | 622-7154-002 | 1004-1104 |

| CODE | PART NUMBER | EFF. | CODE | PART NUMBER | EFF. |
|---|---|---|---|---|---|
| AE658 | 622-7154-002 | 1004-1104 | AE717 | 822-1807-001 | 1004-1104 |
| AE659 | 622-7154-001 | 1004-1104 | AE759 | 503-7 | 1004-1104 |
| AE660 | 622-7154-001 | 1004-1104 | AE760 | 503-4 | 1004-1104 |
| AE661 | 80-118255-401 | 1004-1104 | AE764 | 80K118682-401 | 1004-1104 |
| AE663 | 066-01124-0000 | 1004-1104 | AE765 | 80K118465-403 | 1004-1104 |
| AE664 | 80K118386-403 | 1004-1104 | AE766 | 9D-80130-32 | 1004-1104 |
| AE664 | DAC01 | 1004-1104 | AE767 | 80K118713-401 | 1004-1104 |
| AE665 | 80K118382-401 | 1004-1104 | AE768 | P/O 817-11900-003 | 1004-1104 |
| AE666 | 071-01292-0001 | 1004-1104 | AE769 | 80K118757-401 | 1004-1104 |
| AE667 | 1180-21-21 | 1004-1104 | AE772 | 9B-03508-72 | 1059-1104 |
| AE668 | 100-601200-103 | 1004-1104 | AE773 | MD41-1108(5V) | 1004-1104 |
| AE669 | 80K118409-401 | 1004-1104 | AE774 | P/O 817-18000-002 | 1004-1104 |
| AE670 | 1016-1-11 | 1004-1104 | AE775 | 2116-30-1116 | 1004-1104 |
| AE679 | 1190-01-1111 | 1004-1104 | AE776 | 1117-1-104 | 1004-1104 |
| AE680 | 11901 | 1004-1104 | AE777 | 80K118409-403 | 1004-1104 |
| AE681 | 1180-30-21 | 1004-1104 | AE778 | 80K118741-401 | 1004-1104 |
| AE682 | 80K118457-401 | 1004-1104 | AE779 | 80K118747-401 | 1004-1104 |
| AE683 | 910023-524 | 1004-1104 | B10 | FE187-001 | 1004-1104 |
| AE684 | 914035-1 | 1004-1104 | B11 | FE182-000 | 1004-1104 |
| AE685 | 2B2401-001-01 | 1004-1104 | B12 | EM4011-1 | 1004-1104 |
| AE688 | 80K118386-401 | 1004-1104 | B14 | EM4032-1 | 1004-1017 |
| AE691 | 80K118465-401 | 1004-1104 | B14 | EM4032-2 | 1018-1104 |
| AE693 | 90102-100 | 1004-1104 | B15 | EM4032-1 | 1004-1017 |
| AE694 | 914035-2 | 1004-1104 | B15 | EM4032-2 | 1018-1104 |
| AE696 | 11921 | 1004-1104 | B16 | C132275-6 | 1004-1104 |
| AE697 | 80K118497-801 | 1004-1104 | B17 | C132275-5 | 1004-1104 |
| AE698 | 1018-1-100 | 1004-1104 | B18 | C136066-3 | 1004-1013 |
| AE699 | 1192-30-111101 | 1004-1104 | B18 | C136066-4 | 1014-1033 |
| AE700 | 1058-01-12 | 1004-1104 | B18 | C152550-1 | 1096-1096 |
| AE701 | CI 1114 | 1004-1104 | B18 | C155720-2 | 1092-1095 |
| AE702 | B1035-JHMJ-HUJ7 | 1004-1104 | B18 | C155720-2 | 1097-1104 |
| AE703 | CI509 | 1004-1104 | B1800 | 80-909580-802 | 1004-1104 |
| AE704 | 1117-11 | 1004-1104 | B1801 | 80-909580-801 | 1004-1104 |
| AE705 | 1116-40-1116 | 1004-1104 | B1802 | 80-909580-802 | 1004-1104 |
| AE706 | 1633-01 | 1004-1104 | B1803 | 80-909580-801 | 1004-1104 |
| AE707 | 1603-02-03 | 1004-1104 | B1804 | 80-909580-802 | 1004-1104 |
| AE708 | TH250-14JB | 1004-1104 | B1805 | 80-909580-801 | 1004-1104 |
| AE709 | 6895-S-4-X-3-3 | 1004-1104 | B1806 | 80-909580-802 | 1004-1104 |
| AE711 | 622-6523-205 | 1004-1104 | B1807 | 80-909580-801 | 1004-1104 |
| AE712 | 1116-30-1116 | 1004-1104 | B19 | C136066-3 | 1004-1013 |
| AE713 | 80K118386-405 | 1004-1104 | B19 | C136066-4 | 1014-1033 |

| CODE | PART NUMBER | EFF. | CODE | PART NUMBER | EFF. |
|---|---|---|---|---|---|
| B19 | C152550-1 | 1096-1096 | C12 | ECEA1VU101 | 1004-1104 |
| B19 | C155720-2 | 1092-1095 | C13 | 02XL05TYP1485 | 1004-1034 |
| B19 | C155720-2 | 1097-1104 | C14 | 02XL05TYP1485 | 1004-1034 |
| B21 | 103742-3 | 1004-1104 | C15 | ECEA1JU100 | 1004-1104 |
| B24 | BYLB51824 | 1004-1104 | C16 | CRLK103M15X7RFV | 1004-1104 |
| B25 | BYLB51824 | 1004-1104 | C17 | ECEA1VU221 | 1004-1104 |
| B26 | SM2646-1 | 1004-1104 | C4 | CRLK103M15X7RFVAWA | 1004-1104 |
| B27 | SYLC50576-2 | 1004-1104 | C5 | ECEA1VU221 | 1004-1104 |
| B28 | 011179 | 1026-1104 | C6 | ECEA1VU101 | 1004-1104 |
| B29 | 011179 | 1004-1104 | C600 | 290014 | 1004-1104 |
| B3 | 1C12-43 | 1054-1104 | C600 | 731263 | 1004-1104 |
| B3 | RR54520-C | 1004-1053 | C7 | CRLK104M30X7RFV | 1004-1104 |
| B30 | 011097 | 1004-1104 | C8 | CRLK104M30X7RFV | 1004-1104 |
| B30 | 476665 | 1004-1104 | C9 | ECEA1JU100 | 1004-1104 |
| B31 | 011097 | 1004-1104 | CB1 | MS3320-3 | 1004-1104 |
| B31 | 476665 | 1004-1104 | CB10 | MS14105-25 | 1004-1104 |
| B33 | 2087-3006 | 1004-1104 | CB100 | MS26574-1/2 | 1004-1104 |
| B33 | JBS 13001-1 | 1058-1104 | CB101 | MS3320-3 | 1004-1104 |
| B34 | 1300330 | 1058-1104 | CB102 | MS3320-3 | 1004-1104 |
| B35 | 1300330 | 1058-1104 | CB103 | MS3320-3 | 1004-1104 |
| B36 | 1250435 | 1058-1104 | CB104 | MS3320-3 | 1004-1104 |
| B4 | 1C12-43 | 1054-1104 | CB105 | MS3320-3 | 1004-1104 |
| B4 | RR54520-C | 1004-1053 | CB107 | MS26574-1/2 | 1004-1104 |
| B5 | 1C12-43 | 1054-1104 | CB108 | MS3320-5 | 1004-1104 |
| B5 | RR54520-C | 1004-1053 | CB109 | MS3320-5 | 1004-1104 |
| B6 | 1C12-43 | 1054-1104 | CB11 | MS14105-35 | 1004-1104 |
| B6 | RR54520-C | 1004-1053 | CB110 | MS3320-5 | 1004-1104 |
| B600 | PART OF UMT-15B | 1004-1104 | CB111 | MS3320-3 | 1004-1104 |
| B601 | PART OF UMT-14B | 1004-1104 | CB113 | MS3320-3 | 1004-1104 |
| B602 | 009-1766-050 | 1004-1104 | CB114 | MS3320-3 | 1004-1104 |
| B602 | 009-1965-030 | 1004-1104 | CB115 | MS3320-5 | 1004-1104 |
| B603 | 009-1766-050 | 1004-1104 | CB117 | MS3320-3 | 1004-1104 |
| B603 | 009-1965-030 | 1004-1104 | CB118 | MS3320-3 | 1004-1104 |
| B605 | 071-04037-0001 | 1004-1104 | CB119 | MS3320-3 | 1004-1104 |
| B8 | ( SEE PACKAGE ) | 1004-1104 | CB12 | MS14105-35 | 1004-1104 |
| B9 | EM675-1 | 1004-1104 | CB120 | MS3320-15 | 1004-1104 |
| BT1 | 31055-001 | 1004-1104 | CB121 | MS3320-5 | 1004-1104 |
| BT1 | D412764 | 1004-1104 | CB127 | MS3320-5 | 1004-1104 |
| C1 | CRLK103M15X7RFV | 1004-1104 | CB128 | MS26574-1/2 | 1004-1104 |
| C10 | CRLK103M15X7RFV | 1004-1104 | CB129 | MS26574-1/2 | 1004-1104 |
| C11 | ECEA1VU101 | 1004-1104 | CB13 | MS14105-35 | 1004-1104 |

| CODE | PART NUMBER | EFF. | CODE | PART NUMBER | EFF. |
|---|---|---|---|---|---|
| CB130 | MS26574-1/2 | 1004-1104 | CB161 | PDLM-50 | 1004-1104 |
| CB131 | MS26574-1/2 | 1004-1104 | CB1610 | MS3320-1 | 1004-1104 |
| CB133 | MS3320-3 | 1004-1104 | CB1611 | MS3320-10 | 1004-1104 |
| CB134 | MS3320-3 | 1004-1104 | CB165 | MS26574-1/2 | 1004-1104 |
| CB135 | MS3320-3 | 1004-1104 | CB166 | MS26574-1/2 | 1004-1104 |
| CB136 | MS3320-3 | 1004-1104 | CB167 | MS26574-1/2 | 1004-1104 |
| CB137 | MS3320-3 | 1004-1104 | CB168 | MS14105-25 | 1055-1104 |
| CB138 | MS3320-20 | 1004-1104 | CB169 | MS3320-5 | 1004-1104 |
| CB139 | MS3320-3 | 1004-1104 | CB17 | PDLM 90 | 1004-1104 |
| CB14 | MS14105-35 | 1004-1104 | CB18 | MS3320-5 | 1004-1104 |
| CB140 | MS3320-15 | 1004-1104 | CB19 | MS3320-5 | 1004-1104 |
| CB141 | MS3320-15 | 1004-1104 | CB2 | MS3320-3 | 1004-1104 |
| CB142 | MS14105-35 | 1004-1104 | CB20 | MS3320-5 | 1004-1104 |
| CB143 | MS3320-10 | 1004-1104 | CB21 | MS3320-5 | 1004-1104 |
| CB144 | MS3320-3 | 1004-1104 | CB22 | MS26574-1/2 | 1004-1104 |
| CB145 | MS3320-3 | 1004-1104 | CB23 | MS26574-1/2 | 1004-1104 |
| CB146 | MS3320-10 | 1004-1104 | CB24 | MS3320-3 | 1004-1104 |
| CB147 | MS3320-10 | 1004-1104 | CB25 | MS3320-3 | 1004-1104 |
| CB148 | MS3320-3 | 1004-1104 | CB29 | MS3320-15 | 1004-1104 |
| CB15 | MS14105-35 | 1004-1104 | CB3 | MS3320-3 | 1004-1104 |
| CB150 | MS3320-3 | 1004-1104 | CB30 | MS3320-20 | 1004-1104 |
| CB152 | MS3320-10 | 1004-1104 | CB32 | MS3320-5 | 1004-1104 |
| CB153 | MS3320-3 | 1004-1104 | CB33 | MS3320-3 | 1004-1104 |
| CB154 | MS14105-25 | 1010-1104 | CB34 | MS3320-5 | 1004-1104 |
| CB155 | MS3320-1 | 1004-1104 | CB35 | MS3320-3 | 1004-1104 |
| CB156 | MS3320-20 | 1004-1104 | CB36 | MS3320-3 | 1004-1104 |
| CB157 | MS3320-1 | 1004-1104 | CB37 | MS3320-3 | 1004-1104 |
| CB158 | MS3320-3 | 1004-1104 | CB38 | MS3320-3 | 1004-1104 |
| CB16 | PDLM 90 | 1004-1104 | CB39 | MS3320-3 | 1004-1104 |
| CB160 | PDLM-50 | 1004-1104 | CB4 | MS3320-3 | 1004-1104 |
| CB1601 | MS3320-3 | 1004-1104 | CB40 | MS3320-10 | 1054-1104 |
| CB1602 | MS3320-3 | 1004-1104 | CB40 | MS3320-7-1/2 | 1004-1053 |
| CB1603 | MS3320-5 | 1004-1104 | CB41 | MS3320-10 | 1054-1104 |
| CB1604 | MS3320-15 | 1004-1034 | CB41 | MS3320-7-1/2 | 1004-1053 |
| CB1604 | MS3320-5 | 1035-1104 | CB42 | MS3320-10 | 1054-1104 |
| CB1605 | MS3320-1 | 1004-1104 | CB42 | MS3320-7-1/2 | 1004-1053 |
| CB1606 | MS3320-15 | 1004-1033 | CB43 | MS3320-10 | 1054-1104 |
| CB1606 | MS3320-7-1/2 | 1034-1104 | CB43 | MS3320-7-1/2 | 1004-1053 |
| CB1607 | MS3320-10 | 1004-1104 | CB44 | MS3320-3 | 1004-1104 |
| CB1609 | MS3320-10 | 1004-1033 | CB45 | MS3320-3 | 1004-1104 |
| CB1609 | MS3320-7-1/2 | 1034-1104 | CB46 | MS3320-3 | 1004-1104 |

| CODE | PART NUMBER | EFF. | CODE | PART NUMBER | EFF. |
|---|---|---|---|---|---|
| CB47 | MS3320-3 | 1004-1104 | CB642 | MS3320-7-1/2 | 1038-1104 |
| CB48 | MS3320-3 | 1004-1104 | CB643 | MS3320-7-1/2 | 1004-1104 |
| CB49 | MS3320-3 | 1057-1057 | CB645 | MS3320-3 | 1004-1104 |
| CB49 | MS3320-5 | 1058-1104 | CB647 | MS3320-5 | 1004-1104 |
| CB5 | 3MC3-3-2 | 1004-1033 | CB649 | MS3320-5 | 1004-1104 |
| CB5 | MS26574-1/2 | 1034-1104 | CB65 | MS3320-3 | 1004-1104 |
| CB52 | MS3320-3 | 1004-1104 | CB651 | MS3320-5 | 1004-1104 |
| CB57 | MS26574-1/2 | 1004-1104 | CB653 | MS3320-7-1/2 | 1004-1104 |
| CB58 | MS26574-1/2 | 1004-1104 | CB655 | MS3320-3 | 1004-1104 |
| CB59 | MS3320-3 | 1004-1104 | CB657 | MS3320-3 | 1004-1104 |
| CB6 | 3MC3-3-2 | 1004-1033 | CB658 | MS3320-3 | 1004-1104 |
| CB6 | MS26574-1/2 | 1034-1104 | CB659 | MS3320-3 | 1004-1104 |
| CB601 | MS3320-3 | 1004-1104 | CB66 | MS3320-3 | 1004-1104 |
| CB602 | MS3320-7-1/2 | 1004-1104 | CB661 | MS3320-5 | 1004-1104 |
| CB603 | MS3320-3 | 1004-1104 | CB662 | MS3320-3 | 1058-1104 |
| CB604 | MS3320-3 | 1004-1104 | CB662 | MS3320-5 | 1006-1057 |
| CB605 | MS3320-3 | 1004-1104 | CB664 | MS3320-3 | 1004-1104 |
| CB607 | MS3320-3 | 1004-1104 | CB665 | MS3320-3 | 1004-1104 |
| CB608 | MS3320-3 | 1004-1104 | CB667 | MS3320-3 | 1004-1104 |
| CB61 | MS3320-3 | 1004-1104 | CB669 | MS3320-5 | 1004-1104 |
| CB610 | MS3320-3 | 1004-1104 | CB67 | MS3320-3 | 1004-1104 |
| CB611 | MS3320-3 | 1004-1104 | CB674 | MS3320-3 | 1004-1104 |
| CB612 | MS3320-3 | 1004-1004 | CB675 | MS3320-3 | 1004-1104 |
| CB614 | MS3320-3 | 1004-1104 | CB676 | MS3320-5 | 1058-1104 |
| CB617 | MS3320-3 | 1004-1104 | CB68 | MS3320-3 | 1004-1104 |
| CB618 | MS3320-5 | 1004-1104 | CB7 | MS3320-7-1/2 | 1004-1104 |
| CB619 | MS3320-7-1/2 | 1004-1104 | CB70 | MS3320-3 | 1004-1104 |
| CB62 | MS3320-3 | 1004-1104 | CB708 | MS3320-3 | 1004-1104 |
| CB620 | MS3320-3 | 1004-1104 | CB71 | MS3320-3 | 1004-1104 |
| CB622 | MS3320-3 | 1004-1104 | CB711 | MS3320-3 | 1004-1104 |
| CB63 | MS3320-3 | 1004-1104 | CB713 | MS3320-3 | 1004-1104 |
| CB631 | MS3320-20 | 1004-1104 | CB714 | MS3320-5 | 1004-1104 |
| CB632 | MS3320-3 | 1004-1104 | CB715 | MS3320-3 | 1004-1104 |
| CB633 | MS3320-5 | 1004-1104 | CB72 | MS3320-3 | 1004-1104 |
| CB636 | MS3320-3 | 1004-1104 | CB73 | MS3320-3 | 1004-1104 |
| CB637 | MS3320-3 | 1004-1104 | CB74 | MS3320-10 | 1004-1104 |
| CB638 | MS3320-3 | 1004-1104 | CB75 | MS3320-10 | 1004-1104 |
| CB639 | MS3320-5 | 1004-1104 | CB76 | MS3320-3 | 1004-1104 |
| CB64 | MS3320-3 | 1004-1104 | CB77 | MS3320-5 | 1004-1104 |
| CB640 | MS3320-5 | 1004-1104 | CB78 | MS3320-3 | 1004-1104 |
| CB642 | MS3320-5 | 1004-1104 | CB79 | MS3320-5 | 1004-1104 |

| CODE | PART NUMBER | EFF. | CODE | PART NUMBER | EFF. |
|---|---|---|---|---|---|
| CB8 | MS3320-3 | 1004-1104 | CR157 | 1N4007 | 1004-1104 |
| CB80 | MS3320-3 | 1004-1104 | CR158 | 1N4007 | 1004-1104 |
| CB81 | MS3320-3 | 1082-1082 | CR160 | 1N4007 | 1004-1104 |
| CB83 | MS3320-3 | 1004-1104 | CR161 | 1N4007 | 1004-1104 |
| CB84 | MS3320-3 | 1004-1104 | CR163 | 1N4007 | 1004-1104 |
| CB85 | MS3320-7-1/2 | 1004-1104 | CR164 | 1N4007 | 1004-1104 |
| CB87 | MS3320-3 | 1004-1104 | CR165 | 1N4007 | 1004-1104 |
| CB88 | MS3320-3 | 1004-1104 | CR167 | 1N4007 | 1004-1057 |
| CB89 | MS3320-5 | 1004-1104 | CR168 | 1N4007 | 1004-1104 |
| CB9 | MS14105-25 | 1004-1104 | CR169 | 1N4007 | 1004-1104 |
| CB90 | MS3320-3 | 1004-1104 | CR177 | 1N4007 | 1004-1104 |
| CB91 | MS3320-3 | 1004-1104 | CR178 | 1N4007 | 1004-1104 |
| CB92 | MS3320-3 | 1004-1104 | CR179 | 1N4007 | 1004-1104 |
| CB93 | MS3320-3 | 1004-1104 | CR180 | 1N4007 | 1004-1104 |
| CB95 | MS3320-10 | 1004-1104 | CR181 | 1N4007 | 1004-1104 |
| CB96 | MS3320-3 | 1004-1104 | CR182 | 1N4007 | 1004-1104 |
| CB97 | MS3320-3 | 1004-1104 | CR184 | 1N4007 | 1004-1104 |
| CB98 | MS3320-3 | 1004-1104 | CR186 | 1N4007 | 1004-1104 |
| CB99 | MS3320-3 | 1004-1104 | CR187 | 1N4007 | 1004-1104 |
| CBR1 | 7236-1-200 | 1004-1104 | CR190 | 1N4007 | 1004-1104 |
| CBR2 | 7236-1-200 | 1004-1104 | CR191 | 1N4007 | 1004-1104 |
| CR1 | UES803 | 1004-1104 | CR192 | 1N4007 | 1004-1104 |
| CR10 | 1N4007 | 1004-1104 | CR193 | 1N4007 | 1004-1104 |
| CR104 | 1N4007 | 1004-1104 | CR194 | 1N4007 | 1004-1104 |
| CR106 | 1N4007 | 1004-1104 | CR195 | 1N4007 | 1004-1104 |
| CR107 | 1N4007 | 1004-1104 | CR196 | 1N5627 | 1004-1104 |
| CR11 | 1N4007 | 1004-1104 | CR197 | 1N5627 | 1004-1104 |
| CR110 | 1N5627 | 1004-1104 | CR198 | 1N5627 | 1004-1104 |
| CR120 | 1N4007 | 1004-1104 | CR2 | UES803 | 1004-1104 |
| CR121 | 1N4007 | 1004-1104 | CR200 | 1N4007 | 1004-1104 |
| CR122 | 1N4007 | 1004-1104 | CR201 | 1N4007 | 1004-1104 |
| CR123 | 1N4007 | 1004-1104 | CR202 | 1N4007 | 1004-1104 |
| CR129 | 1N5627 | 1004-1104 | CR203 | 1N4007 | 1004-1104 |
| CR13 | 1N5627 | 1004-1104 | CR204 | 1N4007 | 1004-1104 |
| CR137 | 1N4007 | 1004-1057 | CR205 | 1N4007 | 1004-1104 |
| CR138 | 1N4007 | 1004-1057 | CR206 | 1N4007 | 1004-1104 |
| CR139 | 1N4007 | 1004-1104 | CR207 | 1N4007 | 1004-1104 |
| CR140 | 1N4007 | 1004-1104 | CR208 | 1N4007 | 1004-1104 |
| CR141 | 1N4007 | 1004-1104 | CR209 | 1N4007 | 1004-1104 |
| CR144 | 1N4007 | 1004-1104 | CR210 | 1N4007 | 1004-1104 |
| CR145 | 1N4007 | 1004-1104 | CR211 | 1N4742 | 1004-1104 |

| CODE | PART NUMBER | EFF. | CODE | PART NUMBER | EFF. |
|---|---|---|---|---|---|
| CR217 | 1N5627 | 1004-1104 | CR642 | 1N4007 | 1004-1104 |
| CR218 | 1N5627 | 1004-1104 | CR643 | 1N4007 | 1004-1104 |
| CR229 | 1N4007 | 1058-1104 | CR644 | 1N4007 | 1004-1104 |
| CR23 | 1N5627 | 1004-1104 | CR645 | 1N4007 | 1004-1104 |
| CR230 | BAT49 | 1058-1104 | CR646 | 1N4007 | 1004-1104 |
| CR231 | 1N5338-5E1V5W | 1058-1104 | CR647 | 1N4007 | 1004-1104 |
| CR232 | 1E5KE36A | 1058-1104 | CR648 | 1N4007 | 1004-1104 |
| CR27 | 1N5627 | 1004-1104 | CR649 | 1N4007 | 1004-1104 |
| CR28 | 1N5627 | 1004-1104 | CR650 | 1N4007 | 1004-1104 |
| CR3 | UES803 | 1004-1104 | CR651 | 1N4007 | 1004-1104 |
| CR30 | 1N5627 | 1004-1104 | CR652 | 1N4007 | 1004-1104 |
| CR34 | 1N5627 | 1004-1104 | CR653 | 1N2979A | 1004-1104 |
| CR35 | 1N5627 | 1004-1104 | CR653 | 261-283 | 1004-1104 |
| CR36 | 1N5627 | 1004-1104 | CR654 | 1N4007 | 1004-1104 |
| CR4 | UES803 | 1004-1104 | CR655 | 1N4007 | 1004-1104 |
| CR49 | 1N6293 | 1004-1104 | CR656 | 1313 | 1004-1104 |
| CR5 | UES803 | 1004-1104 | CR657 | 1313 | 1004-1104 |
| CR50 | 1N5627 | 1004-1104 | CR658 | 1N4007 | 1004-1104 |
| CR51 | 1N5627 | 1004-1104 | CR659 | 1N4007 | 1004-1104 |
| CR52 | 1N4007 | 1004-1104 | CR66 | 1N4007 | 1004-1104 |
| CR53 | 1N4007 | 1004-1104 | CR660 | 1N4007 | 1004-1104 |
| CR56 | 1N4007 | 1004-1104 | CR661 | 1N4007 | 1004-1104 |
| CR57 | 1N4007 | 1004-1104 | CR662 | 1N2979BR | 1004-1104 |
| CR58 | 1N4007 | 1004-1104 | CR663 | 1N2979BR | 1004-1104 |
| CR59 | 1N4007 | 1004-1104 | CR664 | 1N4007 | 1004-1104 |
| CR6 | UES803 | 1004-1104 | CR665 | 1N4007 | 1004-1104 |
| CR600 | 1N4007 | 1004-1104 | CR666 | 1N4007 | 1004-1104 |
| CR604 | 1N4007 | 1004-1104 | CR667 | 1N4007 | 1004-1104 |
| CR608 | 1N4007 | 1004-1104 | CR668 | 1N4007 | 1004-1104 |
| CR609 | 1N4007 | 1004-1104 | CR669 | 1N4007 | 1004-1104 |
| CR610 | 1N750A | 1004-1104 | CR67 | 1N4007 | 1004-1104 |
| CR611 | 1N4007 | 1004-1104 | CR670 | 1N4007 | 1004-1104 |
| CR612 | 1N4007 | 1004-1104 | CR671 | 1N4007 | 1004-1104 |
| CR614 | 1N4007 | 1004-1104 | CR672 | 1N4007 | 1004-1104 |
| CR616 | 1N4007 | 1004-1104 | CR673 | 1N4007 | 1004-1104 |
| CR618 | 1N4007 | 1004-1104 | CR674 | 1N4007 | 1004-1104 |
| CR622 | 1N4007 | 1004-1104 | CR675 | 1N4007 | 1004-1104 |
| CR634 | 1N4007 | 1004-1104 | CR676 | 1N4007 | 1004-1104 |
| CR636 | 1N4007 | 1004-1104 | CR677 | 1N4007 | 1004-1104 |
| CR640 | 1N4007 | 1004-1104 | CR678 | 1N4007 | 1004-1104 |
| CR641 | 1N4007 | 1004-1104 | CR679 | 1N4007 | 1004-1104 |

| CODE | PART NUMBER | EFF. | CODE | PART NUMBER | EFF. |
|---|---|---|---|---|---|
| CR68 | 1N4007 | 1004-1104 | CR97 | 1N4007 | 1004-1104 |
| CR680 | 1N4007 | 1004-1104 | CR98 | 1N4744 | 1004-1104 |
| CR681 | 1N4007 | 1004-1104 | DS10 | 30-1944-1 | 1004-1104 |
| CR682 | 1N4007 | 1004-1104 | DS11 | 30-1944-1 | 1004-1104 |
| CR683 | 1N4007 | 1004-1104 | DS12 | SCD5963-01 | 1004-1104 |
| CR684 | 1N4007 | 1004-1104 | DS13 | SCD5963-05 | 1004-1104 |
| CR685 | 1N4007 | 1004-1104 | DS13 | SCD5963-26 | 1004-1104 |
| CR686 | 1N4007 | 1004-1104 | DS1501 | 1202-013 | 1004-1038 |
| CR687 | 1N4007 | 1004-1104 | DS1501 | AP25-0071-00 | 1039-1104 |
| CR688 | 1N4007 | 1004-1104 | DS1502 | 1202-013 | 1004-1104 |
| CR689 | 1N4007 | 1004-1104 | DS1502 | AP25-0071-00 | 1039-1104 |
| CR69 | 1N4007 | 1004-1104 | DS1503 | 1202-013 | 1004-1104 |
| CR690 | 1N4007 | 1004-1104 | DS1503 | AP25-0071-00 | 1039-1104 |
| CR691 | 1N4007 | 1004-1104 | DS16 | SCD5963-04 | 1004-1104 |
| CR7 | UES803 | 1004-1104 | DS1607 | A360 | 1004-1104 |
| CR70 | 1N4007 | 1004-1104 | DS1608 | 2527 | 1004-1104 |
| CR706 | 1N4007 | 1004-1104 | DS1609 | 2527 | 1004-1104 |
| CR707 | 1N4007 | 1004-1104 | DS1621 | 25100-1-23 | 1004-1104 |
| CR71 | 1N4007 | 1004-1104 | DS1622 | 25100-1-23 | 1004-1104 |
| CR712 | 1N750A | 1004-1104 | DS1623 | 25100-1-23 | 1004-1104 |
| CR713 | 1N4007 | 1004-1104 | DS1624 | 25100-1-23 | 1004-1104 |
| CR719 | 1N4007 | 1004-1104 | DS1625 | 25100-1-23 | 1004-1104 |
| CR72 | 1N4007 | 1004-1104 | DS1626 | 25100-1-23 | 1004-1104 |
| CR720 | 1N4007 | 1004-1104 | DS1631 | 25100-1-23 | 1004-1104 |
| CR721 | 1N4007 | 1004-1104 | DS1632 | 25100-1-23 | 1004-1104 |
| CR722 | 1N4007 | 1004-1104 | DS1633 | 25100-1-23 | 1004-1104 |
| CR727 | 1N2979BR | 1004-1104 | DS1634 | 25100-1-23 | 1004-1104 |
| CR728 | 1N4007 | 1004-1104 | DS1635 | 25100-1-23 | 1004-1104 |
| CR729 | 1N4007 | 1004-1104 | DS1637 | 25100-1-23 | 1004-1104 |
| CR73 | 1N4007 | 1004-1104 | DS1638 | 25100-1-17 | 1004-1104 |
| CR730 | 1N4007 | 1004-1104 | DS1639 | 25100-1-17 | 1004-1104 |
| CR731 | 1N4007 | 1004-1104 | DS1640 | A360 | 1004-1104 |
| CR74 | 1N4007 | 1004-1104 | DS1641 | 25100-1-17 | 1004-1104 |
| CR75 | 1N4007 | 1004-1104 | DS1642 | 25100-1-17 | 1004-1104 |
| CR76 | 1N5627 | 1004-1104 | DS1643 | 25100-1-20 | 1004-1104 |
| CR77 | 1N4007 | 1004-1104 | DS1644 | 25100-1-20 | 1004-1104 |
| CR78 | 1N4007 | 1004-1104 | DS1645 | 63245-470 | 1004-1104 |
| CR79 | 1N4007 | 1026-1104 | DS1646 | 63245-470 | 1004-1104 |
| CR8 | 1N4007 | 1004-1104 | DS1647 | 63245-560 | 1004-1104 |
| CR9 | 1N4007 | 1004-1104 | DS1648 | 63245-470 | 1004-1104 |
| CR90 | 1N4007 | 1004-1104 | DS1649 | 63245-560 | 1004-1104 |

| CODE | PART NUMBER | EFF. | CODE | PART NUMBER | EFF. |
|---|---|---|---|---|---|
| DS1650 | 63245-560 | 1004-1104 | DS33 | 2-01 | 1004-1104 |
| DS1651 | 63245-560 | 1004-1104 | DS33 | MS25231-313 | 1004-1104 |
| DS1652 | 63245-620 | 1004-1104 | DS34 | 2-01 | 1004-1104 |
| DS1653 | 63245-620 | 1004-1104 | DS34 | MS25231-313 | 1004-1104 |
| DS1654 | 63245-620 | 1004-1104 | DS35 | SCD5963-12 | 1004-1104 |
| DS1655 | 63245-620 | 1004-1104 | DS36 | SCD5963-14 | 1004-1104 |
| DS1656 | 63245-620 | 1004-1104 | DS37 | SCD5963-16 | 1004-1104 |
| DS1657 | 63245-620 | 1004-1104 | DS38 | SCD5963-11 | 1004-1104 |
| DS1658 | 63245-620 | 1004-1104 | DS39 | SCD5963-13 | 1004-1104 |
| DS1659 | 63245-560 | 1004-1104 | DS4 | 1524 | 1004-1104 |
| DS1660 | 63245-620 | 1004-1104 | DS4 | A1815A8A41 | 1004-1104 |
| DS1663 | 63245-390 | 1004-1104 | DS40 | SCD5963-15 | 1004-1104 |
| DS1664 | 63245-390 | 1004-1104 | DS41 | 4306-1 | 1004-1104 |
| DS1800 | 80-909526-011 | 1004-1104 | DS41 | MS3338-6839 | 1004-1104 |
| DS1801 | 80-909526-011 | 1004-1104 | DS42 | 4306-2 | 1004-1104 |
| DS1802 | 6704960-A1 | 1004-1104 | DS42 | MS3338-6839 | 1004-1104 |
| DS1803 | 6704960-A1 | 1004-1104 | DS43 | SCD5963-07 | 1004-1104 |
| DS1804 | 6704960-A1 | 1004-1104 | DS5 | 1524 | 1004-1104 |
| DS1805 | 6704960-A1 | 1004-1104 | DS5 | A1815A7A41 | 1004-1104 |
| DS1806 | 80-909526-011 | 1004-1104 | DS6 | MS25235-3011 | 1004-1104 |
| DS1807 | 80-909526-011 | 1004-1104 | DS6 | SK30-1877-1 | 1004-1104 |
| DS1808 | 6704960-A1 | 1004-1104 | DS600 | 4306-20 | 1004-1104 |
| DS1809 | 6704960-A1 | 1004-1104 | DS600 | MS3338-6839 | 1004-1104 |
| DS1810 | 6704960-A1 | 1004-1104 | DS602 | 4306-4 | 1004-1104 |
| DS1811 | 6704960-A1 | 1004-1104 | DS602 | MS24515-718 | 1004-1104 |
| DS22 | SCD5963-10 | 1004-1104 | DS603 | 4306-11 | 1004-1104 |
| DS23 | SCD5963-09 | 1004-1104 | DS603 | MS3338-6839 | 1004-1104 |
| DS25 | SCD5963-03 | 1004-1104 | DS604 | 4306-12 | 1004-1104 |
| DS27 | 2-01 | 1004-1104 | DS604 | MS3338-6839 | 1004-1104 |
| DS27 | MS25231-313 | 1004-1104 | DS605 | SCD5963-18 | 1004-1104 |
| DS28 | 2-01 | 1004-1104 | DS607 | 4306-22 | 1004-1104 |
| DS28 | MS25231-313 | 1004-1104 | DS607 | MS3338-6839 | 1004-1104 |
| DS29 | 2-01 | 1004-1104 | DS609 | SCD5963-21 | 1004-1104 |
| DS29 | MS25231-313 | 1004-1104 | DS610 | SCD5963-31 | 1004-1104 |
| DS3 | 30-1290-5 | 1004-1104 | DS611 | 4306-21 | 1004-1104 |
| DS30 | 2-01 | 1004-1104 | DS611 | MS3338-6839 | 1004-1104 |
| DS30 | MS25231-313 | 1004-1104 | DS613 | 4306-30 | 1004-1104 |
| DS31 | 2-01 | 1004-1104 | DS613 | MS3338-6839 | 1004-1104 |
| DS31 | MS25231-313 | 1004-1104 | DS614 | 174B416G3GG5FE | 1004-1104 |
| DS32 | 2-01 | 1004-1104 | DS64 | SCD5963-06 | 1004-1104 |
| DS32 | MS25231-313 | 1004-1104 | DS65 | 4306-19 | 1016-1104 |

| CODE | PART NUMBER | EFF. |
|---|---|---|
| DS65 | 4306-6 | 1004-1015 |
| DS65 | MS3338-6839 | 1004-1104 |
| DS67 | A2064-14-1683 | 1004-1104 |
| DS67 | MS35478-16833 | 1004-1104 |
| DS69 | 4306-8 | 1004-1104 |
| DS69 | MS3338-6839 | 1004-1104 |
| DS7 | 60-0026-1 | 1004-1104 |
| DS7 | MS25338-7079 | 1004-1104 |
| DS70 | SCD5963-08 | 1004-1104 |
| DS71 | 4306-7 | 1004-1104 |
| DS71 | MS3338-6839 | 1004-1104 |
| DS72 | 01-0770190-W-12 | 1004-1104 |
| DS72 | C70190-1 | 1004-1104 |
| DS73 | 01-0770190-W-12 | 1004-1104 |
| DS73 | C70190-1 | 1004-1104 |
| DS74 | 4306-18 | 1004-1104 |
| DS74 | MS3338-6839 | 1004-1104 |
| DS75 | B9700-1-307 | 1004-1104 |
| DS75 | MS35478-307 | 1004-1104 |
| DS76 | 80K118439-001 | 1004-1104 |
| DS76 | SCD5963-19 | 1057-1057 |
| DS76 | SCD5963-27 | 1058-1104 |
| DS77 | 4306-29 | 1004-1104 |
| DS77 | MS3338-6839 | 1004-1104 |
| DS78 | SCD5963-29 | 1004-1104 |
| DS79 | SCD5963-30 | 1004-1104 |
| DS8 | A2064-14-1683 | 1004-1104 |
| DS8 | MS35478-16833 | 1004-1104 |
| E1 | 51539-013C | 1004-1104 |
| E100 | LT55A | 1006-1104 |
| E101 | 80K118392-401 | 1004-1104 |
| E102 | 90-38401 | 1004-1104 |
| E105 | 80K208208-401 | 1004-1104 |
| E109 | 1300350-20 | 1044-1104 |
| E110 | 1300350-19 | 1041-1104 |
| E111 | 80K118706-401 | 1004-1104 |
| E112 | LT-71A | 1004-1104 |
| E12 | 754661-4 | 1004-1104 |
| E13 | 3001-147-545-250C5 | 1004-1104 |
| E14 | 3001-147-545-250C5 | 1004-1104 |
| E15 | P/O ENG STD EQU | 1004-1104 |
| E16 | P/O ENG STD EQU | 1004-1104 |
| E1600 | 727-1-1 | 1004-1104 |
| E1600 | 727-751-4 | 1004-1104 |
| E1610 | 763-1-301 | 1004-1104 |
| E1626A | 763-1-1101 | 1004-1104 |
| E1627 | 763-1-1001 | 1004-1104 |
| E1628 | 763-1-1001 | 1004-1104 |
| E1629 | 763-1-1001 | 1004-1104 |
| E1630 | 727-0436/01 | 1032-1032 |
| E1630 | 763-1-801 | 1004-1104 |
| E1631 | 763-1-1001 | 1004-1104 |
| E1632 | 763-1-1001 | 1004-1104 |
| E1633 | 727-0436/01 | 1032-1032 |
| E1633 | 763-1-801 | 1004-1104 |
| E1634 | 763-1-201 | 1004-1104 |
| E1636 | 763-1-1001 | 1004-1104 |
| E1639 | 763-1-1001 | 1004-1104 |
| E1651 | 763-1-801 | 1004-1104 |
| E1652 | 763-1-801 | 1004-1104 |
| E1664 | 763-1-1001 | 1004-1104 |
| E1665A | 763-1-1101 | 1004-1104 |
| E1666 | 763-1-1101 | 1004-1104 |
| E1666A | 763-1-1101 | 1004-1104 |
| E1667 | 763-1-1101 | 1004-1104 |
| E1667A | 763-1-1101 | 1004-1104 |
| E1668A | 763-1-1101 | 1004-1104 |
| E1669A | 763-1-1101 | 1004-1104 |
| E1671A | 763-1-1204 | 1004-1104 |
| E1672A | 763-1-1204 | 1004-1104 |
| E1675 | 17000-036 | 1004-1104 |
| E1690 | 743-1-1 | 1004-1104 |
| E1691 | 250003-1 | 1004-1104 |
| E1692 | 250003-1 | 1004-1104 |
| E1693 | 250003-1 | 1004-1104 |
| E1697 | 250003-1 | 1004-1104 |
| E1698 | 250003-2 | 1004-1104 |
| E1700 | 80-908106-801 | 1039-1104 |
| E1700 | 80-908209-401 | 1004-1104 |
| E1700 | 80-908209-405 | 1004-1104 |
| E1700 | 80-908209-409 | 1004-1104 |
| E1700 | 80-908209-411 | 1004-1104 |

| CODE | PART NUMBER | EFF. | CODE | PART NUMBER | EFF. |
|---|---|---|---|---|---|
| E1700 | 80-908209-413 | 1004-1104 | E30 | 80-118176-803 | 1004-1015 |
| E1700 | 80-908209-415 | 1004-1104 | E30 | 80-118176-809 | 1016-1040 |
| E1700 | 80-908209-417 | 1004-1104 | E30 | 80-118176-813 | 1054-1054 |
| E1700 | 80-908209-419 | 1004-1104 | E30 | 80-118176-817 | 1058-1104 |
| E1701 | 81035-1 | 1004-1104 | E30 | 80K118338-801 | 1004-1104 |
| E1705 | 18-1030-2 | 1004-1104 | E30 | 80K118349-801 | 1004-1104 |
| E1706 | TR992-10 | 1004-1104 | E30 | 80K118353-401 | 1004-1104 |
| E1707 | TR992-10 | 1004-1104 | E30 | 80K118365-801 | 1004-1104 |
| E1708 | TR992-10 | 1004-1104 | E30 | 80K118384-801 | 1004-1104 |
| E1709 | TR992-10 | 1004-1104 | E30 | 80K118390-801 | 1004-1104 |
| E1710 | TR992-10 | 1004-1104 | E30 | 80K118400-801 | 1078-1078 |
| E1711 | TR992-10 | 1004-1104 | E30 | 80K118404-801 | 1004-1104 |
| E1725 | 189-720 | 1004-1104 | E30 | 80K118420-801 | 1004-1104 |
| E1726 | 189-720 | 1004-1104 | E30 | 80K118432-801 | 1004-1104 |
| E1800 | 727-1-1 | 1004-1104 | E30 | 80K118462-801 | 1004-1104 |
| E1800 | 727-751-4 | 1004-1104 | E30 | 80K118489-801 | 1004-1104 |
| E1810 | 727-1-1 | 1004-1104 | E30 | 80K118493-801 | 1004-1104 |
| E1810 | 727-751-4 | 1004-1104 | E30 | 80K118635-000 | 1004-1104 |
| E1822 | 727-0436/01 | 1004-1105 | E31 | 80-118176-801 | 1004-1004 |
| E1823A | 727-0433/01 | 1004-1104 | E31 | 80-118176-805 | 1006-1015 |
| E1855A | 727-0437/01 | 1004-1104 | E31 | 80-118176-807 | 1016-1033 |
| E1865A | 727-0437/01 | 1004-1104 | E31 | 80-118176-811 | 1034-1104 |
| E1874 | 727-0433/02 | 1004-1104 | E31 | 80K118397-801 | 1004-1104 |
| E1875A | 727-0437/01 | 1004-1104 | E32 | 2117598-4 | 1004-1104 |
| E1884 | 727-0433/02 | 1004-1104 | E33 | 2117804-9 | 1004-1104 |
| E1885A | 727-0437/01 | 1004-1104 | E34 | 80-118246-401 | 1004-1104 |
| E1892 | 727-0436/01 | 1004-1104 | E36 | LT55A | 1004-1104 |
| E1893A | 727-0433/01 | 1004-1104 | E38 | 80-117920-801 | 1004-1104 |
| E1905A | 727-0437/01 | 1004-1104 | E39 | 1819710-1 | 1004-1104 |
| E1915A | 727-0437/01 | 1004-1104 | E4 | 80-208170-401 | 1004-1009 |
| E1926 | 727-0437/02 | 1004-1104 | E4 | 80-208170-403 | 1010-1033 |
| E1951 | 727-0434/01 | 1046-1104 | E4 | 80-208170-405 | 1045-1045 |
| E2 | 51539-013C | 1004-1104 | E4 | 80-208170-407 | 1046-1049 |
| E22 | 80-118187-401 | 1004-1015 | E4 | 80-208170-409 | 1057-1057 |
| E22 | 80-118325-401 | 1016-1104 | E4 | 80-208170-411 | 1002-1002 |
| E25 | 80-118236-401 | 1004-1015 | E4 | 80-208170-411 | 1058-1104 |
| E25 | 80-118320-401 | 1016-1104 | E4 | 80K208200-801 | 1004-1104 |
| E26 | 100-40002-00 | 1004-1104 | E4 | 80K208203-801 | 1004-1104 |
| E27 | SLZ7778 | 1004-1104 | E4 | 80K208212-801 | 1004-1104 |
| E28 | 3D2485-22 | 1004-1104 | E4 | 80K208217-801 | 1004-1104 |
| E29 | 90-38401 | 1004-1104 | E4 | 80K208217-803 | 1004-1104 |

| CODE | PART NUMBER | EFF. |
|---|---|---|
| E4 | 80K208218-801 | 1004-1104 |
| E4 | 80K208218-803 | 1004-1104 |
| E4 | 80K208223-801 | 1004-1104 |
| E4 | 80K208228-801 | 1004-1104 |
| E40 | 80-118252-401 | 1004-1009 |
| E40 | 80-118252-403 | 1050-1051 |
| E40 | 80-118252-405 | 1058-1104 |
| E40 | 80K118422-401 | 1004-1104 |
| E42 | 80-118210-401 | 1004-1015 |
| E42 | 80-118313-401 | 1016-1104 |
| E43 | 520814 | 1004-1104 |
| E44 | 100006149 | 1004-1104 |
| E45 | P/O NOSE LDG | 1004-1104 |
| E47 | 727-0439/02 | 1073-1104 |
| E47 | 90-38601 | 1004-1072 |
| E48 | C136407-2 | 1096-1096 |
| E48 | C136407-3 | 1097-1104 |
| E5 | 90-38701 | 1004-1104 |
| E50 | 80-118241-401 | 1004-1009 |
| E50 | 80-118241-403 | 1010-1015 |
| E50 | 80-118327-401 | 1054-1054 |
| E50 | 80-118327-403 | 1052-1053 |
| E50 | 80-118327-405 | 1097-1104 |
| E51 | 727-0443/01 | 1004-1104 |
| E52 | 30100055 | 1004-1104 |
| E52 | 30104100 | 1004-1104 |
| E53 | 30100055 | 1004-1104 |
| E53 | 30104100 | 1004-1104 |
| E54 | 727-0444/01 | 1004-1104 |
| E57 | 80-115467-401 | 1019-1104 |
| E57 | 80-115470-401 | 1004-1018 |
| E58 | 80-115467-403 | 1019-1104 |
| E58 | 80-115469-002 | 1004-1018 |
| E6 | 70-0196-1 | 1004-1104 |
| E60 | 1819710-2 | 1004-1104 |
| E601 | VF10-347 | 1004-1104 |
| E602 | VF10-347 | 1004-1104 |
| E603 | DMNI70-2 | 1004-1104 |
| E604 | DMNI70-2 | 1004-1104 |
| E605 | 357-8999-020 | 1004-1104 |
| E605 | DMNI70-2 | 1004-1104 |
| E607 | 622-7383-001 | 1004-1104 |
| E609 | DMN4-17 | 1004-1104 |
| E610 | DMN27-3 | 1004-1104 |
| E611 | RGS10-48 | 1004-1104 |
| E613 | 622-7384-001 | 1004-1104 |
| E617 | 261D1389-001 | 1004-1104 |
| E618 | 261C1385-002 | 1004-1104 |
| E620 | DMNI70-2 | 1004-1104 |
| E621 | 909648-401 | 1004-1104 |
| E622 | 909648-402 | 1004-1104 |
| E624 | 064-01029-0000 | 1004-1104 |
| E624 | 071-01272-0001 | 1004-1104 |
| E625 | 071-01290-0000 | 1004-1104 |
| E626 | 018-1394-100 | 1004-1104 |
| E626 | 622-6793-001 | 1004-1104 |
| E627 | 018-1394-100 | 1004-1104 |
| E627 | 622-6793-001 | 1004-1104 |
| E629 | 071-01525-0000 | 1004-1104 |
| E630 | 071-01361-0010 | 1004-1104 |
| E632 | 473-189-000 | 1004-1104 |
| E633 | 100-602061-000 | 1004-1104 |
| E640 | 80K198186-401 | 1004-1104 |
| E640 | 80K198186-405 | 1004-1104 |
| E641 | 10704 | 1004-1104 |
| E642 | 21-38-4 | 1004-1104 |
| E642 | 6930A/21-38 | 1004-1104 |
| E643 | 10-102-26 | 1004-1104 |
| E647 | 805-10003-001 | 1004-1104 |
| E648 | 80K118724-401 | 1004-1104 |
| E653 | DMNI70-2 | 1004-1104 |
| E7 | 60-2799-1 | 1004-1104 |
| E8 | 60-2799-1 | 1004-1104 |
| E86 | HYLZ 50310 | 1002-1002 |
| E86 | HYLZ 50310 | 1004-1104 |
| E87 | HYLZ 50310 | 1002-1002 |
| E87 | HYLZ 50310 | 1004-1104 |
| E88 | HYLZ 50310 | 1002-1002 |
| E88 | HYLZ 50310 | 1004-1104 |
| E89 | 80-118172-401 | 1004-1015 |
| E89 | 80-118308-401 | 1016-1104 |
| E90 | L213796 | 1004-1104 |

| CODE | PART NUMBER | EFF. | CODE | PART NUMBER | EFF. |
|---|---|---|---|---|---|
| E91 | 871FA311 | 1004-1104 | GY611 | 501-1902-01 | 1004-1104 |
| E92 | 280-1-2 | 1004-1104 | GY611 | 504-0035-914 | 1004-1104 |
| E93 | 100-40001-00 | 1004-1104 | HR1 | 0851GN1 | 1004-1104 |
| E94 | 100-40001-00 | 1004-1104 | HR10 | 6978 | 1010-1104 |
| E95 | 80-117101-( ) | 1004-1104 | HR13 | NP165231-01 | 1004-1022 |
| E96 | 42-895 | 1004-1104 | HR13 | NP165251-01 | 1023-1104 |
| E97 | 622-7154-002 | 1004-1104 | HR14 | NP165231-02 | 1004-1022 |
| E98 | 80-118333-401 | 1004-1104 | HR14 | NP165251-02 | 1023-1104 |
| E99 | 80-118346-801 | 1004-1104 | HR2 | 0851GN2 | 1004-1104 |
| F1 | SM1-1A | 1004-1104 | HR3 | ST340-2GP | 1004-1104 |
| F10 | SM1-1A | 1038-1104 | HR4 | ST340-2GP | 1004-1104 |
| F10 | SM1-2A | 1004-1037 | HR5 | ST344-2GP | 1004-1104 |
| F11 | SM1-1A | 1004-1104 | HR6 | ST344-2GP | 1004-1104 |
| F12 | SM1-1A | 1004-1104 | HR8 | ST340-2GP | 1004-1104 |
| F13 | SM1-1A | 1004-1104 | HT601 | 64300-000 | 1004-1104 |
| F14 | SM1-1A | 1004-1104 | HT602 | 64300-000 | 1004-1104 |
| F16 | SM1-2A | 1004-1104 | IC1 | LM340T15 | 1004-1104 |
| F18 | SM1-1A | 1004-1104 | IC2 | LM555C | 1004-1104 |
| F19 | 4202 | 1004-1104 | IC3 | 110-92-316 | 1004-1104 |
| F19 | HBO 125 | 1004-1104 | IC3 | ULN2004A | 1004-1104 |
| F19 | SM1-1A | 1004-1104 | IC4 | 110-92-308 | 1004-1104 |
| F2 | SM1-250MA | 1004-1104 | IC4 | LM555C | 1004-1104 |
| F21 | 4202 | 1044-1104 | IC609 | DS2004MJ | 1004-1104 |
| F21 | HBO125 | 1044-1104 | ID605 | 622-6785-021 | 1004-1013 |
| F26 | 4202 | 1004-1104 | ID605 | 622-6785-121 | 1014-1025 |
| F26 | HBO 150 | 1004-1104 | ID605 | 622-6785-131 | 1026-1037 |
| F3 | SM1-1A | 1004-1104 | ID605 | TBD | 1038-1104 |
| F5 | SM1-1A | 1004-1104 | ID606 | 24030C2025 | 1004-1025 |
| F6 | SM1-500MA | 1004-1104 | ID606 | 24030-C2125 | 1026-1035 |
| F7 | SM1-250 MA | 1004-1104 | ID606 | 5C15.42.35K05.1.BA | 1036-1104 |
| F8 | SM1-1A | 1004-1104 | ID606 | 5C15.42.35K05.1.BF | 1004-1104 |
| F9 | SM1-1A | 1004-1104 | ID607 | 622-4782-001 | 1004-1104 |
| FT605 | 80K118482-001 | 1004-1104 | ID608 | 4A16.42.60F05.1.CA | 1042-1104 |
| FT605 | MS35489-13 | 1004-1104 | ID608 | SLZ9157-3 | 1004-1041 |
| FT607 | 80K118482-001 | 1004-1104 | ID609 | 622-3975-011 | 1004-1104 |
| FT607 | MS35489-13 | 1004-1104 | ID611 | 3337LB21C | 1038-1104 |
| FT608 | MS35489-4 | 1004-1104 | ID611 | 622-2506-006 | 1039-1104 |
| GY601 | 501-1204-01 | 1004-1104 | ID618 | 23932-011 | 1004-1045 |
| GY603 | 622-6136-002 | 1004-1104 | ID618 | 3A63.42.50F05.1.MB | 1046-1104 |
| GY608 | 622-6136-002 | 1004-1104 | ID621 | 622-2923-035 | 1004-1020 |
| GY610 | 501-1204-01 | 1004-1104 | ID621 | 622-9462-035 | 1021-1104 |

| CODE | PART NUMBER | EFF. |
|---|---|---|
| ID622 | 3337LB21C | 1004-1038 |
| ID622 | 622-2506-006 | 1039-1104 |
| ID624 | 622-6197-002 | 1004-1104 |
| ID626 | 787-6173-217 | 1004-1104 |
| ID627 | 622-6020-022 | 1004-1104 |
| ID628 | 622-7876-012 | 1004-1104 |
| ID628 | 622-9849-012 | 1004-1104 |
| ID629 | 622-6020-022 | 1004-1104 |
| ID629 | 634-4320-002 | 1004-1104 |
| ID630 | 622-4160-011 | 1004-1104 |
| ID632 | 5506-SG5-Y | 1004-1104 |
| K1 | A703R | 1004-1104 |
| K10 | M5757-23-031 | 1004-1104 |
| K100 | CS500-040-D4A | 1004-1104 |
| K100 | S500-A3A10 | 1004-1104 |
| K101 | CS500-040-D4A | 1004-1104 |
| K101 | S500-A3A10 | 1004-1104 |
| K102 | S400-A3A2 | 1004-1104 |
| K102 | VS400-320-D002 | 1004-1104 |
| K103 | M39029-1-101 | 1004-1104 |
| K103 | SM600BA50N1 | 1004-1104 |
| K104 | M39029-1-101 | 1004-1104 |
| K104 | SM600BA50N1 | 1004-1104 |
| K105 | M39029-1-101 | 1004-1104 |
| K105 | SM600BA50N1 | 1004-1104 |
| K106 | M520J5N | 1041-1104 |
| K11 | M5757-23-031 | 1004-1104 |
| K1600 | M300-B4NER | 1039-1104 |
| K1600 | M500-J2N003 | 1004-1038 |
| K1600 | S300-A7B3 | 1039-1104 |
| K1601 | M39016-22-007 | 1004-1104 |
| K1602 | 4B1E126 | 1004-1104 |
| K18 | M500J2N003 | 1004-1104 |
| K19 | M320J2N | 1004-1104 |
| K2 | A703R | 1004-1104 |
| K20 | M320J2N | 1004-1104 |
| K23 | M39029-1-101 | 1004-1104 |
| K23 | SM600BA25N1 | 1004-1104 |
| K24 | M39029-1-101 | 1004-1104 |
| K24 | SM600BA35N1 | 1004-1104 |
| K25 | M39029-1-101 | 1004-1104 |
| K25 | SM600BA75N1 | 1004-1104 |
| K26 | M39029-1-101 | 1004-1104 |
| K26 | SM600BA75N1 | 1004-1104 |
| K27 | 6041H144 | 1004-1104 |
| K28 | 6041H144 | 1004-1104 |
| K3 | A703R | 1004-1104 |
| K30 | M39016/6-209 | 1004-1104 |
| K31 | M39029-1-101 | 1004-1104 |
| K31 | SM600BA100A1 | 1058-1104 |
| K31 | SM600BA100N1 | 1004-1057 |
| K34 | M520J5N | 1004-1104 |
| K35 | M520J5N | 1004-1104 |
| K38 | M39016-22-007 | 1004-1104 |
| K39 | M520J5N | 1010-1104 |
| K4 | A703R | 1004-1104 |
| K42 | M39016-22-009 | 1004-1104 |
| K47 | M500-J2NER | 1058-1104 |
| K47 | M5757-23-031 | 1004-1057 |
| K48 | M500-J2NER | 1058-1104 |
| K48 | M5757-23-031 | 1004-1057 |
| K5 | MS24141D2 | 1004-1104 |
| K53 | M39016-22-007 | 1004-1104 |
| K54 | M39016-22-007 | 1004-1104 |
| K55 | M5757-23-031 | 1004-1104 |
| K56 | M5757-23-031 | 1004-1104 |
| K57 | M39029-1-101 | 1004-1104 |
| K57 | SM600BA50N1 | 1004-1104 |
| K58 | M39029-1-101 | 1004-1104 |
| K58 | SM600BA50N1 | 1004-1104 |
| K59 | M520J5N | 1004-1104 |
| K6 | A703R | 1004-1104 |
| K60 | M520J5N | 1004-1104 |
| K600 | M320J2N | 1004-1104 |
| K601 | 4B1E126 | 1004-1104 |
| K602 | M39016-22-007 | 1004-1104 |
| K604 | 4B1E126 | 1004-1104 |
| K61 | M520J5N | 1004-1104 |
| K62 | M520J5N | 1004-1104 |
| K620 | 4B1E126 | 1004-1104 |
| K621 | M39016-22-007 | 1004-1104 |
| K622 | 4B1E126 | 1004-1104 |

| CODE | PART NUMBER | EFF. | CODE | PART NUMBER | EFF. |
|---|---|---|---|---|---|
| K623 | M39016-22-007 | 1004-1104 | K88 | M39029-1-101 | 1004-1104 |
| K624 | 712D26 | 1004-1104 | K88 | SM600BA10A1 | 1004-1104 |
| K625 | 4B1E126 | 1004-1104 | K89 | M39016-22-007 | 1004-1104 |
| K626 | 4B1E126 | 1004-1104 | K9 | A703T | 1004-1104 |
| K628 | 4B1E126 | 1004-1104 | K90 | M39016-22-009 | 1004-1104 |
| K629 | 4B1E126 | 1004-1104 | K92 | M39016-22-009 | 1004-1104 |
| K630 | M39016-22-007 | 1004-1104 | K93 | M39016-22-009 | 1004-1104 |
| K632 | 712D26 | 1004-1104 | K94 | M39016-22-009 | 1004-1104 |
| K633 | M39016-22-009 | 1004-1104 | K96 | M5757-23-031 | 1026-1104 |
| K634 | M39016-22-007 | 1004-1104 | K97 | M39016-22-009 | 1004-1104 |
| K635 | M39016-22-007 | 1004-1104 | K98 | M39016-22-009 | 1004-1104 |
| K637 | 4B1E126 | 1004-1104 | L1 | 3D2381-06 | 1004-1104 |
| K639 | 4B1E126 | 1004-1104 | L13 | EM484-3 | 1004-1104 |
| K64 | M39016-22-009 | 1004-1104 | L14 | P/O 210962 | 1004-1104 |
| K640 | M5757-23-031 | 1004-1104 | L15 | P/O 210962 | 1004-1104 |
| K647 | M39016-22-007 | 1004-1104 | L16 | 114109001 | 1004-1104 |
| K648 | M39016-22-007 | 1004-1104 | L17 | 100006060 | 1004-1104 |
| K649 | M39016-22-007 | 1004-1104 | L18 | EM484-3 | 1004-1104 |
| K65 | M39016-22-009 | 1004-1104 | L19 | EM484-3 | 1004-1104 |
| K650 | M39016/22-007 | 1004-1104 | L2 | 3D2381-06 | 1004-1104 |
| K651 | M39016-22-007 | 1004-1104 | L20 | 133D160-8 | 1004-1104 |
| K652 | 712D126 | 1004-1104 | L20 | 5146-00-1 | 1037-1104 |
| K7 | A703R | 1004-1104 | L20 | 83720-2 | 1004-1036 |
| K75 | M520J5N | 1004-1104 | L21 | P21021 | 1004-1104 |
| K76 | M520J5N | 1004-1104 | L22 | 2860085-101 | 1004-1104 |
| K77 | M520J5N | 1004-1104 | L23 | P/O ENGINE | 1004-1104 |
| K78 | M39016-6-209 | 1004-1104 | L24 | P/O ENGINE | 1004-1104 |
| K79 | M39016-22-009 | 1004-1104 | L25 | P/O ENGINE | 1004-1104 |
| K8 | A703T | 1004-1104 | L26 | P/O ENGINE | 1004-1104 |
| K80 | M39016-22-009 | 1004-1104 | L27 | PYLB51541 | 1004-1104 |
| K81 | M320J2N | 1004-1104 | L28 | PYLB51541 | 1004-1104 |
| K82 | M300-J2NER | 1058-1104 | L3 | EM9005-2 | 1082-1082 |
| K82 | M5757-23-031 | 1004-1057 | L30 | PYLB51541 | 1004-1104 |
| K83 | M39016-22-009 | 1004-1104 | L31 | PYLB51541 | 1004-1104 |
| K84 | M39016-22-009 | 1004-1104 | L32 | 39-775 | 1004-1104 |
| K85 | M39016-22-007 | 1004-1015 | L32 | EM9005-2 | 1004-1022 |
| K85 | M39016-22-009 | 1016-1104 | L33 | EM9005-2 | 1004-1022 |
| K86 | M39029-1-101 | 1004-1104 | L4 | EM9005-2 | 1082-1082 |
| K86 | SM600BA35N1 | 1004-1104 | L5 | 24960-4 | 1004-1104 |
| K87 | M39029-1-101 | 1004-1104 | L6 | 24960-4 | 1004-1104 |
| K87 | SM600BA10A1 | 1004-1104 | L7 | 27441482-03 | 1004-1104 |

| CODE | PART NUMBER | EFF. | CODE | PART NUMBER | EFF. |
|---|---|---|---|---|---|
| L8 | 103744-3 | 1004-1104 | M7 | 14DM02TYP1399 | 1004-1104 |
| LS1800 | E11-54X5783-6 | 1004-1104 | M8 | 14DM02TYP1399 | 1004-1104 |
| LS1801 | E11-54X5783-6 | 1004-1104 | M9 | 04DB31TYP1400 | 1004-1104 |
| LS1802 | E11-54X5783-6 | 1004-1104 | MC1 | 2087-0101 | 1004-1104 |
| LS600 | E11-54X5783-6 | 1004-1104 | MC1 | JBS 5001-1 | 1004-1104 |
| LS601 | E11-54X5783-6 | 1004-1104 | MG1 | 23080-019 | 1004-1104 |
| M1 | 310-1-2 | 1004-1104 | MG2 | 23080-019 | 1004-1104 |
| M10 | 04DB31TYP1400 | 1004-1104 | MK601 | 66T | 1004-1031 |
| M11 | 08DM10TYP1420 | 1004-1104 | MK601 | 66TRA | 1032-1104 |
| M11 | MS28042-1A | 1004-1104 | MK602 | 66T | 1004-1031 |
| M12 | 08DM10TYP1420 | 1004-1104 | MK602 | 66TRA | 1032-1104 |
| M12 | MS28042-1A | 1004-1104 | MT10 | MS28034-3 | 1004-1104 |
| M13 | 13DM08TYP1417 | 1004-1104 | MT11 | MS28034-3 | 1004-1104 |
| M13 | MS28042-1A | 1004-1104 | MT12 | 125582-1 | 1004-1022 |
| M14 | 13DM08TYP1417 | 1004-1104 | MT12 | 125582-3 | 1023-1104 |
| M14 | MS28042-1A | 1004-1104 | MT13 | 125582-1 | 1004-1022 |
| M15 | 15DM12TYP1418 | 1004-1104 | MT13 | 125582-3 | 1023-1104 |
| M15 | MS28042-1A | 1004-1104 | MT16 | 04TL21TYP1403 | 1035-1047 |
| M16 | 15DM12TYP1418 | 1004-1104 | MT16 | 04TL42TYP1763 | 1048-1104 |
| M16 | MS28042-1A | 1004-1104 | MT17 | 04TL21TYP1403 | 1035-1047 |
| M17 | 15DM12ATYP1419 | 1004-1104 | MT17 | 04TL42TYP1763 | 1048-1104 |
| M17 | MS28042-1A | 1004-1104 | MT18 | 04TL09TYP1107 | 1004-1047 |
| M18 | 15DM12ATYP1419 | 1004-1104 | MT18 | 04TL37ATYP1765 | 1048-1104 |
| M18 | MS28042-1A | 1004-1104 | MT19 | 04TL09TYP1031 | 1004-1047 |
| M21 | 05DB30TYP1430 | 1004-1104 | MT19 | 04TL37TYP1764 | 1048-1104 |
| M22 | 64415 | 1004-1104 | MT20 | 04TL10TYP1108 | 1004-1047 |
| M22 | 720-299 | 1004-1104 | MT20 | 04TL38ATYP1767 | 1048-1104 |
| M23 | P24023 | 1004-1104 | MT21 | 04TL10TYP1032 | 1004-1047 |
| M24 | 55050-1168 | 1004-1104 | MT21 | 04TL38TYP1766 | 1048-1104 |
| M25 | RCM60ACL2 | 1004-1104 | MT22 | 04TL11ATYP1402 | 1004-1047 |
| M3 | C2350L4M23 | 1004-1104 | MT22 | 04TL39ATYP1769 | 1048-1104 |
| M5 | 16DM05TYP1432 | 1004-1104 | MT23 | 04TL11ATYP1401 | 1004-1047 |
| M5 | 16DM07BTYP1876 | 1004-1104 | MT23 | 04TL39TYP1768 | 1048-1104 |
| M5 | MS28042-1A | 1004-1104 | MT24 | 04TL13ATYP1450 | 1004-1047 |
| M52 | 05DB11ATYP1772 | 1004-1104 | MT24 | 04TL41ATYP1771 | 1048-1104 |
| M6 | 16DM05TYP1432 | 1004-1104 | MT25 | 04TL13ATYP1450 | 1004-1047 |
| M6 | 16DM07BTYP1876 | 1004-1104 | MT25 | 04TL41ATYP1771 | 1048-1104 |
| M6 | MS28042-1A | 1004-1104 | MT26 | 04TL12TYP1034 | 1004-1047 |
| M601 | M877 | 1004-1104 | MT26 | 04TL40TYP1770 | 1048-1104 |
| M602 | RC59-01 | 1004-1004 | MT27 | 04TL12TYP1034 | 1004-1047 |
| M604 | M877 | 1004-1104 | MT27 | 04TL40TYP1770 | 1048-1104 |

| CODE | PART NUMBER | EFF. | CODE | PART NUMBER | EFF. |
|---|---|---|---|---|---|
| MT28 | 1-2-1-81-302 | 1004-1104 | PCB3 | 80-118315-401 | 1016-1104 |
| MT29 | 1-2-1-81-302 | 1004-1104 | PCB30 | 80-118399-401 | 1058-1104 |
| MT37 | DA55-95-7-1 | 1004-1104 | PCB31 | 80K118708-401 | 1004-1104 |
| MT38 | DA55-95-7-1 | 1004-1104 | PCB32 | 80K118727-401 | 1004-1104 |
| MT41 | EM8028-1 | 1004-1104 | PCB33 | 80-118754-401 | 1100-1104 |
| MT42 | EM8028-1 | 1004-1104 | PCB4 | 80-118249-401 | 1004-1104 |
| MT45 | EM8028-1 | 1004-1104 | PCB6 | 80-118244-401 | 1004-1015 |
| MT46 | EM8028-1 | 1004-1104 | PCB6 | 80-118324-401 | 1016-1104 |
| MT47 | SLZ7306 | 1004-1104 | PCB7 | 80-118235-401 | 1004-1015 |
| MT54 | 213181 | 1004-1104 | PCB7 | 80-118319-401 | 1016-1104 |
| MT55 | 213181 | 1004-1104 | PCB8 | 80-118303-401 | 1004-1015 |
| MT58 | 140-113 | 1004-1104 | PS1 | 1B250-1D1 | 1004-1104 |
| MT59 | 140-113 | 1004-1104 | PS2 | 1B250-1D1 | 1004-1104 |
| MT601 | 622-5812-001 | 1004-1104 | Q10 | 2N2222 | 1004-1104 |
| MT640 | 622-5812-001 | 1004-1104 | Q11 | 2N2907 | 1004-1104 |
| MT8 | MS27212-2-3 | 1032-1104 | Q12 | 2N6045 | 1004-1104 |
| MT8 | P/O FWD WING | 1004-1104 | Q13 | 2N6045 | 1004-1104 |
| MT9 | MS27212-2-3 | 1032-1104 | Q14 | 2N2907 | 1004-1104 |
| MT9 | P/O FWD WING | 1004-1104 | Q15 | 2N2907 | 1004-1104 |
| PCB1 | 80-208177-401 | 1004-1104 | Q16 | 2N2222 | 1004-1104 |
| PCB10 | 80-118330-401 | 1046-1049 | Q17 | 2N2222 | 1004-1104 |
| PCB11 | 80-118331-401 | 1004-1015 | Q2 | 2N6045 | 1004-1104 |
| PCB12 | 80-118239-401 | 1004-1015 | Q4 | 2N2222 | 1004-1104 |
| PCB12 | 80-118322-401 | 1016-1104 | Q5 | 2N6045 | 1004-1104 |
| PCB13 | 80-118157-403 | 1041-1104 | Q600 | 2N2222 | 1004-1104 |
| PCB13 | 80-118157-407 | 1004-1015 | Q8 | 2N6045 | 1004-1104 |
| PCB13 | 80-118251-401 | 1004-1015 | Q9 | 2N6045 | 1004-1104 |
| PCB13 | 80-118311-401 | 1016-1104 | R1 | 01TG04TYP1026 | 1004-1104 |
| PCB14 | 80K118340-401 | 1004-1104 | R10 | RTV501K5JSF7559 | 1004-1104 |
| PCB15 | 80-118336-401 | 1004-1104 | R100 | RCR07GF103J | 1004-1104 |
| PCB16 | 80-118157-403 | 1004-1104 | R101 | RSS25470OHMTA | 1004-1104 |
| PCB16 | 80K118395-401 | 1004-1104 | R102 | RSS104E7OHMTA | 1004-1104 |
| PCB17 | 80K208206-401 | 1004-1104 | R103 | RCR07GF103J | 1004-1104 |
| PCB2 | 80-118190-401 | 1004-1015 | R104 | RCR07GF103J | 1004-1104 |
| PCB2 | 80-118312-401 | 1016-1104 | R105 | RCR07GF103J | 1004-1104 |
| PCB20 | 80K118443-401 | 1004-1104 | R106 | RCR07GF103J | 1004-1104 |
| PCB21 | 80K118491-401 | 1004-1104 | R107 | RCR07GF103J | 1004-1104 |
| PCB22 | 80-118157-405 | 1004-1104 | R108 | RCR07GF103J | 1004-1104 |
| PCB24 | 80K118456-401 | 1004-1104 | R109 | RKC04-2E2KOHM | 1004-1104 |
| PCB28 | 80K118683-401 | 1004-1104 | R110 | RKC04-220OHM | 1004-1104 |
| PCB3 | 80-118213-401 | 1004-1015 | R111 | RKC04-100KOHM | 1004-1104 |

| CODE | PART NUMBER | EFF. |
|---|---|---|
| R112 | RKC04-2E2KOHM | 1004-1104 |
| R113 | RCR20G102J | 1004-1104 |
| R114 | RKC04-220OHM | 1004-1104 |
| R115 | RKC04-2E2KOHM | 1004-1104 |
| R116 | RKC05-270OHM | 1004-1104 |
| R117 | RKC04-2E7KOHM | 1004-1104 |
| R118 | RCR32G181J | 1004-1104 |
| R119 | RKC04-10KOHM | 1004-1104 |
| R120 | RKC04-15KOHM | 1004-1104 |
| R121 | RKC04-100KOHM | 1004-1104 |
| R122 | 26161 | 1041-1042 |
| R123 | RCR20GF222J | 1058-1104 |
| R14 | RCR20GF222J | 1004-1104 |
| R15 | RCR20GF471J | 1004-1104 |
| R17 | AN3155-25-25 | 1004-1104 |
| R2 | 01TG04TYP1026 | 1004-1104 |
| R22 | RCR07GF103J | 1004-1104 |
| R23 | RCR07GF102J | 1004-1104 |
| R24 | RCR07GF472J | 1004-1104 |
| R25 | RCR07GF332J | 1004-1104 |
| R26 | RCR07GF332J | 1004-1104 |
| R27 | RCR07GF332J | 1004-1104 |
| R28 | RCR07GF332J | 1004-1104 |
| R3 | 754822-2 | 1004-1104 |
| R33 | RCR20GF222J | 1004-1104 |
| R34 | RCR20GF222J | 1004-1104 |
| R35 | RCR20GF471J | 1004-1104 |
| R36 | RCR20GF471J | 1004-1104 |
| R37 | RCR20GF222J | 1004-1104 |
| R38 | RCR20GF222J | 1004-1104 |
| R5 | B57364S109M | Substitute |
| R5 | CL100 | 1004-1104 |
| R6 | B57364S109M | Substitute |
| R6 | CL100 | 1004-1104 |
| R600 | RCR07G123J | 1004-1104 |
| R601 | RKC04-2E2KOHM | 1004-1104 |
| R602 | RCR07G123J | 1004-1104 |
| R603 | RCR07G472J | 1004-1104 |
| R608 | RCR32G390J | 1004-1104 |
| R609 | P13TPR2E2K | 1004-1104 |
| R610 | RCR32G390J | 1004-1104 |
| R611 | P13TPR2E2K | 1004-1104 |
| R612 | RCR32G390J | 1004-1104 |
| R613 | RKC-05-25E5KOHM | 1004-1104 |
| R618 | RB10 56R J | 1004-1104 |
| R618 | RB10-150R-J | 1016-1080 |
| R618 | RB10-150R-J | 1082-1104 |
| R618 | RER65F80R6R | 1006-1015 |
| R674 | RCR07G222J | 1004-1104 |
| R675 | RCR07G103J | 1004-1104 |
| R677 | RBR54L0R590FM | 1004-1104 |
| R678 | RCR07G103J | 1004-1104 |
| R69 | A43-500FKS1-2 | 1004-1104 |
| R7 | CL10 | 1004-1104 |
| R77 | RCR20GF472J | 1004-1104 |
| R87 | RCR07GF102J | 1004-1104 |
| R88 | RCR07G121J | 1004-1104 |
| R89 | RCR07G473J | 1004-1104 |
| R9 | A43S10KFKS1-2 | 1004-1104 |
| R90 | RCR07GF102J | 1004-1104 |
| R91 | RCR20GF222J | 1004-1104 |
| R92 | RCR07GF102J | 1004-1104 |
| R93 | RCR07G473J | 1004-1104 |
| R94 | RCR20G331J | 1004-1104 |
| R97 | RCR07G273J | 1004-1104 |
| R98 | RCR07G273J | 1004-1104 |
| R99 | RCR07GF103J | 1004-1104 |
| RE601 | 622-6137-001 | 1004-1031 |
| RE601 | 622-6137-201 | 1032-1104 |
| RE602 | 622-6137-001 | 1004-1031 |
| RE602 | 622-6137-201 | 1032-1104 |
| RE603 | 622-7382-101 | 1004-1104 |
| RE605 | 622-7382-101 | 1004-1104 |
| RP601 | 914034 | 1004-1104 |
| RP602 | 914034 | 1004-1104 |
| RT1 | 754691-1 | 1004-1104 |
| RT14 | P/O PM1803X1000 | 1004-1104 |
| RT15 | P/O PM1803X1000 | 1004-1104 |
| RT16 | P/O PM1803X1000 | 1004-1104 |
| RT17 | P/O PM1803X1000 | 1004-1104 |
| RT18 | P/O PM1803X1000 | 1004-1104 |
| RT19 | P/O PM1803X1000 | 1004-1104 |

| CODE | PART NUMBER | EFF. | CODE | PART NUMBER | EFF. |
|---|---|---|---|---|---|
| RT2 | 792778-1 | 1004-1104 | S119 | 4306-9 | 1004-1104 |
| RT20 | 1300440 | 1041-1042 | S119 | 581-911 | 1004-1104 |
| RT21 | 1300440 | 1058-1104 | S119 | MS3338-6839 | 1004-1104 |
| RT22 | 1300450-3 | 1041-1104 | S12 | MS27407-4 | 1004-1104 |
| RT23 | 1300450-3 | 1052-1104 | S120 | 4306-10 | 1004-1104 |
| RT3 | P/O BATTERY | 1004-1104 | S120 | 581-911 | 1004-1104 |
| RT6 | 54B1 | 1004-1104 | S120 | MS3338-6839 | 1004-1104 |
| RT601 | 129H | 1004-1104 | S121 | V3L104D8 | 1004-1104 |
| RV1 | SIOVS20K11 | 1004-1104 | S122 | V3L104D8 | 1004-1104 |
| RV10 | SIOVS20K11 | 1004-1104 | S123 | V3-101D8 | 1004-1104 |
| RV11 | SIOVS20K11 | 1004-1104 | S124 | V3-101D8 | 1004-1104 |
| RV12 | SIOVS20K11 | 1004-1104 | S125 | V3-101D8 | 1004-1104 |
| RV13 | SIOVS20K11 | 1004-1104 | S126 | V3-101D8 | 1004-1104 |
| RV14 | SIOVS20K11 | 1004-1104 | S127 | V3-101D8 | 1004-1104 |
| RV15 | SIOVS20K11 | 1004-1104 | S128 | V3-101D8 | 1004-1104 |
| RV16 | SIOVS20K11 | 1004-1104 | S129 | V3-101D8 | 1004-1104 |
| RV17 | SI0VS20K11 | 1004-1104 | S13 | MS24523-22 | 1004-1104 |
| RV18 | SI0VS20K11 | 1004-1104 | S130 | V3L104D8 | 1004-1104 |
| RV2 | SIOVS20K11 | 1004-1104 | S131 | V3-101D8 | 1004-1104 |
| RV3 | SIOVS20K25 | 1004-1104 | S132 | V3-101D8 | 1004-1104 |
| RV4 | SIOVS20K25 | 1004-1104 | S133 | V3-101D8 | 1004-1104 |
| RV5 | SIOVS20K25 | 1004-1104 | S138 | 3500-4-24 | 1004-1090 |
| RV6 | SIOVS20K25 | 1004-1104 | S138 | M24236/1-0886 | 1091-1104 |
| RV7 | SIOVS20K11 | 1004-1104 | S139 | 3500-4-24 | 1004-1090 |
| RV8 | SIOVS20K11 | 1004-1104 | S139 | M24236/1-0886 | 1091-1104 |
| RV9 | SIOVS20K11 | 1004-1104 | S14 | MS24523-22 | 1004-1104 |
| S1 | MS24524-22 | 1004-1104 | S140 | MS24523-22 | 1004-1104 |
| S10 | MS24524-23 | 1004-1104 | S141 | 30B1012-9 | 1004-1104 |
| S100 | P/O PACKAGE | 1004-1104 | S141 | 39-3 | 1004-1104 |
| S101 | 1103P0570 | 1004-1104 | S142 | M24236/1-0880 | 1091-1104 |
| S102 | 1103P0570 | 1004-1104 | S143 | M24236/1-0880 | 1091-1104 |
| S103 | 1103P0398 | 1004-1104 | S144 | GB300NA205 | 1004-1104 |
| S104 | 1103P0398 | 1004-1104 | S145 | M24236/1-0880 | 1091-1104 |
| S105 | V3 | 1004-1104 | S15 | MS24523-22 | 1004-1104 |
| S106 | V3 | 1004-1104 | S154 | 1103P0671 | 1004-1104 |
| S107 | 1103-P0399 | 1004-1104 | S155 | 1103P0671 | 1004-1104 |
| S108 | 1103-P0399 | 1004-1104 | S156 | 1103PO400 | 1004-1104 |
| S11 | MS27407-4 | 1004-1104 | S157 | 1103PO400 | 1004-1104 |
| S110 | P/O ENGINE | 1004-1104 | S16 | MS27406-1 | 1004-1104 |
| S111 | P/O ENGINE | 1004-1104 | S160 | MS24525-31 | 1004-1104 |
| S112 | MS24523-22 | 1057-1057 | S1601 | V3L104D8 | 1004-1104 |

| CODE | PART NUMBER | EFF. |
|---|---|---|
| S1602 | BZ2RQ1T | 1004-1104 |
| S1603 | 4306-25 | 1004-1104 |
| S1603 | MS3338-6839 | 1004-1104 |
| S161 | MS24658-23D | 1004-1104 |
| S162 | MS24523-23 | 1004-1104 |
| S163 | MS24523-23 | 1004-1104 |
| S164 | MK4BR | 1004-1104 |
| S165 | 218C50-65 | 1004-1104 |
| S167 | 4-3100DUE1HBF | 1004-1104 |
| S168 | 3500-4-50 | 1026-1104 |
| S168 | 4-3100DUE1HBF | 1004-1025 |
| S169 | 7108P3YZQE | 1004-1104 |
| S17 | MS27406-1 | 1004-1104 |
| S170 | 3500-30-64 | 1004-1104 |
| S171 | 3500-30-64 | 1004-1104 |
| S172 | 1103PO400 | 1004-1104 |
| S173 | 1103PO400 | 1004-1104 |
| S174 | MS24523-23 | 1004-1104 |
| S175 | 7201P3YZQ | 1004-1104 |
| S176 | 30-1 | 1004-1104 |
| S178 | MS24523-22 | 1004-1104 |
| S179 | V3L104D8 | 1004-1104 |
| S18 | MS24658-23D | 1004-1104 |
| S180 | MS27406-1 | 1058-1104 |
| S181 | MS24523-23 | 1058-1104 |
| S182 | MS24523-23 | 1058-1104 |
| S183 | 97-2374 | 1058-1104 |
| S184 | 97-2375 | 1058-1104 |
| S185 | 1300570-5 | 1041-1104 |
| S186 | 1300570-5 | 1041-1104 |
| S19 | MS24658-23D | 1004-1104 |
| S197 | P/O ENGINE | 1073-1104 |
| S198 | P/O ENGINE | 1073-1104 |
| S2 | 25ET61SF | 1004-1104 |
| S20 | 44YY29493 | 1004-1104 |
| S21 | MS24523-22 | 1004-1104 |
| S22 | MS24523-22 | 1004-1104 |
| S23 | 3500-4-24 | 1004-1090 |
| S23 | M24236/1-0886 | 1091-1104 |
| S24 | MS24525-23 | 1004-1104 |
| S25 | MS24523-27 | 1004-1104 |
| S26 | 3500-4-24 | 1004-1090 |
| S26 | M24236/1-886 | 1091-1104 |
| S27 | MS27407-4 | 1004-1104 |
| S28 | MS27407-4 | 1004-1104 |
| S3 | 25ET61SF | 1004-1104 |
| S30 | MS24524-22 | 1004-1104 |
| S31 | MS24524-22 | 1004-1104 |
| S32 | MS24524-21 | 1004-1104 |
| S33 | MS24524-22 | 1004-1104 |
| S34 | MS24524-22 | 1004-1104 |
| S35 | MS24524-23 | 1004-1104 |
| S36 | MS24524-23 | 1004-1104 |
| S37 | MS27407-4 | 1004-1104 |
| S38 | MS24524-27 | 1004-1104 |
| S4 | MS27406-1 | 1004-1104 |
| S40 | MS27407-4 | 1004-1104 |
| S41 | MS27407-4 | 1004-1104 |
| S42 | 1D1470-15 | 1004-1104 |
| S43 | 1D1470-15 | 1004-1104 |
| S46 | MS24658-23D | 1004-1104 |
| S47 | MS24658-23D | 1004-1104 |
| S48 | MS24524-23 | 1082-1082 |
| S49 | MS24523-22 | 1004-1104 |
| S5 | MS24524-31 | 1004-1104 |
| S50 | 7401P3YZQ | 1004-1104 |
| S52 | MS24523-23 | 1004-1104 |
| S53 | MS24523-23 | 1004-1104 |
| S53 | MS25224-1 | 1004-1104 |
| S56 | C2006R | 1004-1018 |
| S56 | P/O 80-115467-4 | 1019-1104 |
| S57 | C2006R | 1004-1018 |
| S57 | P/O 80-115467-4 | 1019-1104 |
| S58 | 403-4300 | 1004-1018 |
| S58 | P/O 80-115467-4 | 1019-1104 |
| S59 | 403-4300 | 1004-1018 |
| S59 | P/O 80-115467-4 | 1019-1104 |
| S6 | MS24524-31 | 1004-1104 |
| S60 | 7205L42YZQ | 1004-1104 |
| S601 | C2006 | 1004-1018 |
| S601 | P/O 80-115467-4 | 1019-1104 |
| S602 | C2006 | 1004-1018 |

| CODE | PART NUMBER | EFF. | CODE | PART NUMBER | EFF. |
|---|---|---|---|---|---|
| S602 | P/O 80-115467-4 | 1019-1104 | S70 | 53-1995 | 1004-1104 |
| S603 | 7101KZQE | 1004-1104 | S71 | GB300NA210 | 1004-1104 |
| S605 | C2006 | 1004-1018 | S74 | MS24659-23D | 1004-1104 |
| S605 | P/O 80-115467-4 | 1019-1104 | S76 | P/O 80-115467-4 | 1019-1104 |
| S606 | C2006 | 1004-1018 | S76 | P2-110312 | 1004-1018 |
| S606 | P/O 80-115467-4 | 1019-1104 | S77 | MS24658-23D | 1004-1104 |
| S61 | 4TL1-1A | 1004-1104 | S78 | 3500-30-64 | 1004-1104 |
| S62 | 54YY2288 | 1004-1104 | S79 | 3500-30-64 | 1004-1104 |
| S629 | 30B1012-9 | 1004-1104 | S8 | P/O RH MAIN GEA | 1004-1104 |
| S629 | 39-3 | 1004-1104 | S84 | P/O RH MAIN GEA | 1004-1104 |
| S63 | 750659-3 | 1004-1104 | S85 | P/O LH MAIN GEA | 1004-1104 |
| S630 | 7205P3 | 1023-1104 | S86 | P/O RH MAIN GEA | 1004-1104 |
| S631 | 7201P3 | 1004-1104 | S87 | P/O LH MAIN GEA | 1004-1104 |
| S633 | 7201P3 | 1004-1104 | S88 | MK4BR | 1004-1104 |
| S635 | C2006 | 1004-1018 | S89 | P/O LH MAIN GEA | 1004-1104 |
| S635 | P/O 80-115467-4 | 1019-1104 | S9 | MS24524-23 | 1004-1104 |
| S637 | 7203P3 | 1004-1104 | S90 | P/O NOSE GEAR | 1004-1104 |
| S639 | 7201P3 | 1004-1104 | S91 | MK4BR | 1004-1104 |
| S64 | 750659-3 | 1004-1104 | S92 | P/O NOSE GEAR | 1004-1104 |
| S640 | 7201P3 | 1004-1104 | S93 | P/O NOSE GEAR | 1004-1104 |
| S641 | 4306-24 | 1004-1104 | S94 | CS402-5 | 1004-1104 |
| S641 | MS3338-6839 | 1004-1104 | S95 | CS402-5 | 1004-1104 |
| S642 | 4306-24 | 1004-1104 | S97 | P/O ENGINE ASSY | 1004-1104 |
| S642 | MS3338-6839 | 1004-1104 | S98 | P/O ENGINE ASSY | 1004-1104 |
| S643 | 4306-23 | 1004-1104 | S99 | 750665-1 | 1004-1104 |
| S643 | MS3338-6839 | 1004-1104 | SP10 | 34137 | 1004-1104 |
| S644 | 4306-23 | 1004-1104 | SP1000 | D101-00 | 1004-1104 |
| S644 | MS3338-6839 | 1004-1104 | SP1001 | 320559 | 1004-1104 |
| S645 | 30-1 | 1004-1104 | SP1002 | D101-00 | 1004-1104 |
| S646 | 7101KZQE | 1004-1104 | SP1003 | D101-00 | 1004-1104 |
| S647 | 7201P3YZQ | 1004-1104 | SP1004 | D101-00 | 1004-1104 |
| S65 | 7205L42YZQ | 1004-1104 | SP1005 | D101-00 | 1004-1104 |
| S650 | 30-1 | 1004-1104 | SP1006 | D101-00 | 1004-1104 |
| S652 | 7205P3 | 1004-1104 | SP1007 | D101-00 | 1004-1104 |
| S654 | 7401P3YZQ | 1004-1104 | SP1008 | D101-00 | 1004-1104 |
| S656 | 7403P3YZQ | 1004-1104 | SP1009 | D101-00 | 1004-1104 |
| S657 | 631421-029 | 1004-1104 | SP1010 | D101-00 | 1004-1104 |
| S658 | 631421-029 | 1004-1104 | SP1011 | D101-00 | 1004-1104 |
| S659 | 7413P3YZQE | 1004-1104 | SP1012 | D101-00 | 1004-1104 |
| S660 | 631421-033 | 1004-1104 | SP1013 | D101-00 | 1004-1104 |
| S7 | MS27408-4A | 1004-1104 | SP1014 | D101-00 | 1004-1104 |

| CODE | PART NUMBER | EFF. | CODE | PART NUMBER | EFF. |
|---|---|---|---|---|---|
| SP1015 | D101-00 | 1004-1104 | SP1055 | 320559 | 1004-1104 |
| SP1016 | D101-00 | 1004-1104 | SP1056 | 320559 | 1004-1104 |
| SP1017 | D101-00 | 1004-1104 | SP1057 | 320559 | 1004-1104 |
| SP1018 | D101-00 | 1004-1104 | SP1058 | 320559 | 1004-1104 |
| SP1019 | D101-00 | 1004-1104 | SP1059 | 320559 | 1004-1104 |
| SP1020 | D101-00 | 1004-1104 | SP106 | M7928/5-3 | 1004-1104 |
| SP1021 | D101-00 | 1004-1104 | SP1060 | 320559 | 1004-1104 |
| SP1022 | D101-00 | 1004-1104 | SP1061 | D101-00 | 1004-1104 |
| SP1023 | D101-00 | 1004-1104 | SP1062 | D101-00 | 1004-1104 |
| SP1024 | D101-00 | 1004-1104 | SP1063 | D101-00 | 1004-1104 |
| SP1025 | D101-00 | 1004-1104 | SP1064 | D101-00 | 1004-1104 |
| SP1026 | D101-00 | 1004-1104 | SP1065 | D101-00 | 1004-1104 |
| SP1027 | D101-00 | 1004-1104 | SP1066 | D101-00 | 1004-1104 |
| SP1028 | D101-00 | 1004-1104 | SP1067 | D101-00 | 1004-1104 |
| SP1029 | D101-00 | 1004-1104 | SP1068 | D101-00 | 1004-1104 |
| SP1030 | D101-00 | 1004-1104 | SP1069 | D101-00 | 1004-1104 |
| SP1031 | D101-00 | 1004-1104 | SP107 | M7928/5-4 | 1004-1104 |
| SP1032 | D101-00 | 1004-1104 | SP1070 | D101-00 | 1004-1104 |
| SP1033 | D101-00 | 1004-1104 | SP1071 | 320559 | 1004-1104 |
| SP1034 | D101-00 | 1004-1104 | SP1072 | 320559 | 1004-1104 |
| SP1035 | D101-00 | 1004-1104 | SP1073 | 320562 | 1004-1104 |
| SP1036 | D101-00 | 1004-1104 | SP1074 | 320559 | 1004-1104 |
| SP1037 | D101-00 | 1004-1104 | SP1075 | 320559 | 1004-1104 |
| SP1038 | D101-00 | 1004-1104 | SP1076 | 320559 | 1004-1104 |
| SP1039 | D101-00 | 1004-1104 | SP1077 | 320559 | 1004-1104 |
| SP1040 | D101-00 | 1004-1104 | SP1078 | 320559 | 1004-1104 |
| SP1041 | D101-00 | 1004-1104 | SP1079 | D101-00 | 1004-1104 |
| SP1042 | D101-00 | 1004-1104 | SP108 | M7928/5-3 | 1004-1104 |
| SP1043 | D101-00 | 1004-1104 | SP1080 | D101-00 | 1004-1104 |
| SP1044 | D101-00 | 1004-1104 | SP1084 | D101-00 | 1004-1104 |
| SP1045 | D101-00 | 1004-1104 | SP1085 | D101-00 | 1004-1104 |
| SP1046 | D101-00 | 1004-1104 | SP1086 | D101-00 | 1004-1104 |
| SP1047 | D101-00 | 1004-1104 | SP1087 | D101-00 | 1004-1104 |
| SP1048 | 320559 | 1004-1104 | SP1088 | D101-00 | 1004-1104 |
| SP1049 | 320559 | 1004-1104 | SP1089 | D101-00 | 1004-1104 |
| SP105 | M7928/5-4 | 1004-1104 | SP109 | M7928/5-3 | 1004-1104 |
| SP1050 | 320559 | 1004-1062 | SP1090 | D101-00 | 1004-1104 |
| SP1051 | 320559 | 1004-1062 | SP1091 | D101-00 | 1004-1104 |
| SP1052 | 320559 | 1004-1062 | SP1092 | D101-00 | 1004-1104 |
| SP1053 | D101-00 | 1004-1104 | SP1093 | D101-00 | 1004-1104 |
| SP1054 | 320559 | 1004-1104 | SP1094 | D101-00 | 1004-1104 |

| CODE | PART NUMBER | EFF. | CODE | PART NUMBER | EFF. |
|---|---|---|---|---|---|
| SP1095 | D101-00 | 1004-1104 | SP1137 | 320559 | 1004-1104 |
| SP1096 | D101-00 | 1004-1104 | SP1138 | 320559 | 1004-1104 |
| SP1097 | D101-00 | 1004-1104 | SP1139 | 320559 | 1004-1104 |
| SP1098 | D101-00 | 1004-1104 | SP1140 | 320559 | 1004-1104 |
| SP1099 | D101-00 | 1004-1104 | SP1141 | 320559 | 1004-1104 |
| SP11 | 320559 | 1004-1104 | SP1142 | 320559 | 1004-1104 |
| SP110 | M7928/5-3 | 1004-1104 | SP1143 | 320559 | 1004-1104 |
| SP1100 | D101-00 | 1004-1104 | SP115 | 320562 | 1004-1104 |
| SP1101 | D101-00 | 1004-1104 | SP1153 | D101-00 | 1004-1104 |
| SP1102 | D101-00 | 1004-1104 | SP1154 | D101-00 | 1004-1104 |
| SP1103 | D101-00 | 1004-1104 | SP1155 | D101-00 | 1004-1104 |
| SP1108 | D101-00 | 1004-1104 | SP1156 | D101-00 | 1004-1104 |
| SP1109 | D101-00 | 1004-1104 | SP1157 | D101-00 | 1004-1104 |
| SP111 | M7928/5-3 | 1004-1104 | SP1158 | D101-00 | 1004-1104 |
| SP1110 | D101-00 | 1004-1104 | SP1159 | D101-00 | 1004-1104 |
| SP1111 | D101-00 | 1004-1104 | SP116 | M7928/5-4 | 1004-1104 |
| SP1112 | D101-00 | 1004-1104 | SP1160 | D101-00 | 1004-1104 |
| SP1113 | D101-00 | 1004-1104 | SP1161 | D101-00 | 1004-1104 |
| SP1114 | D101-00 | 1004-1104 | SP1162 | D101-00 | 1004-1104 |
| SP1115 | D101-00 | 1004-1104 | SP1163 | D101-00 | 1004-1104 |
| SP1116 | D101-00 | 1004-1104 | SP1167 | D101-00 | 1004-1104 |
| SP1117 | D101-00 | 1004-1104 | SP1168 | D101-00 | 1004-1104 |
| SP1118 | 320559 | 1004-1104 | SP1169 | D101-00 | 1004-1104 |
| SP1119 | D101-00 | 1004-1104 | SP117 | M7928/5-4 | 1004-1104 |
| SP112 | M7928/5-3 | 1004-1104 | SP1170 | D101-00 | 1004-1104 |
| SP1120 | D101-00 | 1004-1104 | SP1171 | D101-00 | 1004-1104 |
| SP1122 | D101-00 | 1004-1104 | SP1172 | D101-00 | 1004-1104 |
| SP1123 | D101-00 | 1004-1104 | SP1173 | 34138 | 1004-1104 |
| SP1124 | D101-00 | 1004-1104 | SP1174 | 34137 | 1004-1104 |
| SP1125 | D101-00 | 1004-1104 | SP1175 | D101-00 | 1004-1104 |
| SP1126 | D101-00 | 1004-1104 | SP1176 | D101-00 | 1004-1104 |
| SP1127 | D101-00 | 1004-1104 | SP1177 | D101-00 | 1004-1104 |
| SP1128 | D101-00 | 1004-1104 | SP1178 | D101-00 | 1004-1104 |
| SP1129 | D101-00 | 1004-1104 | SP1179 | D101-00 | 1004-1104 |
| SP1130 | D101-00 | 1004-1104 | SP119 | 320559 | 1004-1104 |
| SP1131 | D101-00 | 1004-1104 | SP1191 | D101-00 | 1004-1104 |
| SP1132 | D101-00 | 1004-1104 | SP1192 | D101-00 | 1004-1104 |
| SP1133 | D101-00 | 1004-1104 | SP1193 | D101-00 | 1004-1104 |
| SP1134 | 320559 | 1004-1104 | SP1194 | D101-00 | 1004-1104 |
| SP1135 | 320559 | 1004-1104 | SP1195 | D101-00 | 1004-1104 |
| SP1136 | 320559 | 1004-1104 | SP1196 | D101-00 | 1004-1104 |

| CODE | PART NUMBER | EFF. | CODE | PART NUMBER | EFF. |
|---|---|---|---|---|---|
| SP1197 | D101-00 | 1004-1104 | SP1233 | D101-00 | 1004-1104 |
| SP1198 | D101-00 | 1004-1104 | SP1234 | D101-00 | 1004-1104 |
| SP1199 | D101-00 | 1004-1104 | SP1235 | 320559 | 1004-1104 |
| SP12 | 34137 | 1004-1104 | SP1236 | D101-00 | 1004-1104 |
| SP120 | 320562 | 1004-1104 | SP1237 | D101-00 | 1004-1104 |
| SP1200 | D101-00 | 1004-1104 | SP1238 | D101-00 | 1004-1104 |
| SP1201 | 320562 | 1004-1104 | SP1239 | D101-00 | 1004-1104 |
| SP1202 | 320562 | 1004-1104 | SP124 | 34137 | 1031-1104 |
| SP1203 | D101-00 | 1004-1104 | SP1240 | D101-00 | 1004-1104 |
| SP1204 | D101-00 | 1004-1104 | SP1241 | 34137 | 1004-1104 |
| SP1205 | D101-00 | 1004-1104 | SP1242 | 34137 | 1004-1104 |
| SP1206 | D101-00 | 1004-1104 | SP1243 | 320559 | 1004-1104 |
| SP1207 | D101-00 | 1004-1104 | SP1244 | 320559 | 1004-1104 |
| SP1208 | D101-00 | 1004-1104 | SP1245 | 320559 | 1004-1104 |
| SP1209 | D101-00 | 1004-1104 | SP1246 | D101-00 | 1004-1104 |
| SP121 | M7928/5-3 | 1004-1104 | SP1247 | D101-00 | 1004-1104 |
| SP1210 | D101-00 | 1004-1104 | SP1248 | D101-00 | 1004-1104 |
| SP1211 | D101-00 | 1004-1104 | SP1249 | D101-00 | 1004-1104 |
| SP1212 | D101-00 | 1004-1104 | SP125 | D101-00 | 1031-1104 |
| SP1213 | D101-00 | 1004-1104 | SP1250 | D101-00 | 1004-1104 |
| SP1214 | D101-00 | 1004-1104 | SP1251 | D101-00 | 1004-1104 |
| SP1215 | D101-00 | 1004-1104 | SP1252 | D101-00 | 1004-1104 |
| SP1216 | D101-00 | 1004-1104 | SP1253 | D101-00 | 1004-1104 |
| SP1217 | D101-00 | 1004-1104 | SP1254 | D101-00 | 1004-1104 |
| SP1218 | D101-00 | 1004-1104 | SP1255 | D101-00 | 1004-1104 |
| SP1219 | D101-00 | 1022-1104 | SP1256 | D101-00 | 1004-1104 |
| SP122 | M7928/5-3 | 1004-1104 | SP126 | D101-00 | 1031-1104 |
| SP1220 | D101-00 | 1022-1104 | SP1260 | D101-00 | 1004-1104 |
| SP1221 | D101-00 | 1022-1104 | SP1262 | D101-00 | 1004-1104 |
| SP1222 | D101-00 | 1022-1104 | SP1268 | D101-00 | 1004-1104 |
| SP1223 | D101-00 | 1004-1104 | SP1269 | D101-00 | 1004-1104 |
| SP1224 | D101-00 | 1004-1104 | SP127 | 34137 | 1031-1104 |
| SP1225 | D101-00 | 1004-1104 | SP1270 | 320562 | 1004-1104 |
| SP1226 | 320559 | 1004-1104 | SP1271 | 320562 | 1004-1104 |
| SP1227 | 320559 | 1004-1104 | SP1273 | D101-00 | 1004-1104 |
| SP1228 | 320559 | 1004-1104 | SP1275 | D101-00 | 1004-1104 |
| SP1229 | 320559 | 1004-1104 | SP1276 | D101-00 | 1004-1104 |
| SP123 | 34137 | 1031-1104 | SP1278 | D101-00 | 1004-1104 |
| SP1230 | D101-00 | 1004-1104 | SP1279 | D101-00 | 1004-1104 |
| SP1231 | D101-00 | 1004-1104 | SP128 | 34137 | 1031-1104 |
| SP1232 | 320559 | 1004-1104 | SP1281 | 320559 | 1004-1104 |

| CODE | PART NUMBER | EFF. | CODE | PART NUMBER | EFF. |
|---|---|---|---|---|---|
| SP1282 | 320559 | 1004-1104 | SP1323 | 34137 | 1004-1104 |
| SP1283 | D101-00 | 1004-1104 | SP1324 | 34137 | 1004-1104 |
| SP1284 | D101-00 | 1004-1104 | SP1325 | D101-00 | 1004-1104 |
| SP1285 | D101-00 | 1004-1104 | SP1326 | 320559 | 1004-1104 |
| SP1287 | M7928/5-5 | 1004-1104 | SP1327 | 320559 | 1004-1104 |
| SP1288 | M7928/5-5 | 1004-1104 | SP1328 | D101-00 | 1004-1104 |
| SP1289 | D101-00 | 1004-1104 | SP1329 | D101-00 | 1004-1104 |
| SP129 | D101-00 | 1031-1104 | SP1331 | D101-00 | 1004-1104 |
| SP1290 | D101-00 | 1004-1104 | SP1332 | D101-00 | 1004-1104 |
| SP1291 | D101-00 | 1004-1104 | SP1333 | D101-00 | 1004-1104 |
| SP1292 | D101-00 | 1004-1104 | SP1334 | D101-00 | 1004-1104 |
| SP1293 | D101-00 | 1004-1104 | SP1335 | D101-00 | 1004-1104 |
| SP1294 | D101-00 | 1004-1104 | SP1336 | D101-00 | 1004-1104 |
| SP1295 | D101-00 | 1004-1104 | SP1338 | D101-00 | 1004-1104 |
| SP1296 | D101-00 | 1004-1104 | SP1339 | 320559 | 1004-1104 |
| SP1297 | D101-00 | 1004-1104 | SP1340 | 320559 | 1004-1104 |
| SP1298 | D101-00 | 1004-1104 | SP1341 | 320559 | 1004-1104 |
| SP1299 | D101-00 | 1004-1104 | SP1357 | D101-00 | 1004-1104 |
| SP13 | 34137 | 1004-1104 | SP1358 | D101-00 | 1004-1104 |
| SP130 | D101-00 | 1031-1104 | SP1359 | D101-00 | 1004-1104 |
| SP1300 | M7928/5-4 | 1004-1124 | SP1360 | D101-00 | 1004-1104 |
| SP1301 | M7928/5-4 | 1004-1124 | SP1361 | D101-00 | 1004-1104 |
| SP1302 | D101-00 | 1004-1104 | SP1362 | D101-00 | 1004-1104 |
| SP1303 | M7928/5-4 | 1004-1124 | SP1363 | D101-00 | 1004-1104 |
| SP1304 | M7928/5-4 | 1004-1124 | SP1364 | D101-00 | 1004-1104 |
| SP1305 | 320559 | 1004-1018 | SP1366 | 320559 | 1004-1104 |
| SP1308 | 320559 | 1004-1018 | SP1367 | 320559 | 1004-1104 |
| SP1309 | D101-00 | 1004-1104 | SP1368 | D101-00 | 1004-1104 |
| SP1310 | D101-00 | 1004-1104 | SP1369 | D101-00 | 1004-1104 |
| SP1311 | D101-00 | 1004-1104 | SP1370 | D101-00 | 1004-1104 |
| SP1312 | D101-00 | 1004-1104 | SP1371 | D101-00 | 1004-1104 |
| SP1313 | D101-00 | 1004-1104 | SP1375 | D101-00 | 1004-1104 |
| SP1314 | D101-00 | 1004-1104 | SP1376 | D101-00 | 1004-1104 |
| SP1315 | D101-00 | 1004-1104 | SP1378 | D101-00 | 1004-1104 |
| SP1316 | M7928/5-3 | 1004-1104 | SP1379 | D101-00 | 1004-1104 |
| SP1317 | M7928/5-3 | 1004-1104 | SP1382 | D101-00 | 1004-1104 |
| SP1318 | M7928/5-3 | 1004-1104 | SP1383 | D101-00 | 1004-1104 |
| SP1319 | M7928/5-3 | 1004-1104 | SP1384 | D101-00 | 1004-1104 |
| SP1320 | 34138 | 1004-1104 | SP1385 | D101-00 | 1004-1104 |
| SP1321 | 34138 | 1004-1104 | SP1386 | D101-00 | 1004-1104 |
| SP1322 | 34138 | 1004-1104 | SP1387 | D101-00 | 1004-1104 |

| CODE | PART NUMBER | EFF. | CODE | PART NUMBER | EFF. |
|---|---|---|---|---|---|
| SP1388 | D101-00 | 1004-1104 | SP1446 | D101-00 | 1004-1104 |
| SP1399 | D101-00 | 1004-1104 | SP1447 | D101-00 | 1004-1104 |
| SP14 | 34137 | 1004-1104 | SP1448 | D101-00 | 1004-1104 |
| SP1400 | D101-00 | 1004-1104 | SP1449 | D101-00 | 1004-1104 |
| SP1409 | M7928/5-3 | 1004-1104 | SP1450 | D101-00 | 1004-1104 |
| SP1410 | M7928/5-3 | 1004-1104 | SP1451 | D101-00 | 1004-1104 |
| SP1411 | M7928/5-3 | 1004-1104 | SP1452 | D101-00 | 1004-1104 |
| SP1412 | D101-00 | 1004-1104 | SP1453 | 320562 | 1004-1104 |
| SP1413 | D101-00 | 1004-1104 | SP1454 | D101-00 | 1004-1104 |
| SP1414 | D101-00 | 1004-1104 | SP1455 | 320559 | 1004-1104 |
| SP1415 | D101-00 | 1004-1104 | SP1456 | D101-00 | 1004-1104 |
| SP1416 | D101-00 | 1004-1104 | SP1457 | D101-00 | 1004-1104 |
| SP1417 | D101-00 | 1004-1104 | SP1458 | D101-00 | 1004-1104 |
| SP1418 | D101-00 | 1004-1104 | SP1459 | D101-00 | 1004-1104 |
| SP1419 | D101-00 | 1004-1104 | SP1460 | D101-00 | 1004-1104 |
| SP1420 | D101-00 | 1004-1104 | SP1461 | D101-00 | 1004-1104 |
| SP1421 | D101-00 | 1004-1104 | SP1462 | 320562 | 1004-1104 |
| SP1422 | D101-00 | 1004-1104 | SP1463 | 320562 | 1004-1104 |
| SP1423 | D101-00 | 1004-1104 | SP1464 | D101-00 | 1004-1104 |
| SP1424 | D101-00 | 1004-1104 | SP1465 | D101-00 | 1004-1104 |
| SP1425 | D101-00 | 1004-1104 | SP1466 | D101-00 | 1004-1104 |
| SP1426 | D101-00 | 1004-1104 | SP1467 | D101-00 | 1004-1104 |
| SP1427 | D101-00 | 1004-1104 | SP1468 | 320562 | 1004-1104 |
| SP1428 | 320562 | 1004-1104 | SP1469 | D101-00 | 1004-1104 |
| SP1429 | 320562 | 1004-1104 | SP1470 | 320559 | 1004-1104 |
| SP1430 | D101-00 | 1004-1104 | SP1471 | D101-00 | 1004-1104 |
| SP1431 | D101-00 | 1004-1104 | SP1472 | 320559 | 1004-1104 |
| SP1432 | D101-00 | 1004-1104 | SP1473 | 320559 | 1004-1104 |
| SP1433 | D101-00 | 1004-1104 | SP1474 | D101-00 | 1004-1104 |
| SP1434 | D101-00 | 1004-1104 | SP1475 | 320559 | 1004-1104 |
| SP1435 | 320559 | 1004-1104 | SP1476 | 320559 | 1004-1104 |
| SP1436 | D101-00 | 1004-1104 | SP1477 | D101-00 | 1004-1104 |
| SP1437 | D101-00 | 1004-1104 | SP1478 | D101-00 | 1004-1104 |
| SP1438 | D101-00 | 1004-1104 | SP1479 | D101-00 | 1004-1104 |
| SP1439 | D101-00 | 1004-1104 | SP1480 | D101-00 | 1004-1104 |
| SP1440 | M7928/5-3 | 1004-1104 | SP1481 | D101-00 | 1004-1104 |
| SP1441 | D101-00 | 1004-1104 | SP1482 | D101-00 | 1004-1104 |
| SP1442 | D101-00 | 1004-1104 | SP1483 | 320559 | 1004-1104 |
| SP1443 | D101-00 | 1004-1104 | SP1484 | 320559 | 1004-1104 |
| SP1444 | D101-00 | 1004-1104 | SP1485 | 320559 | 1004-1104 |
| SP1445 | D101-00 | 1004-1104 | SP1486 | 320562 | 1004-1104 |

| CODE | PART NUMBER | EFF. | CODE | PART NUMBER | EFF. |
|---|---|---|---|---|---|
| SP1487 | 320559 | 1004-1104 | SP1570 | D101-00 | 1004-1104 |
| SP1488 | 320562 | 1004-1104 | SP1571 | 320559 | 1004-1104 |
| SP1489 | 320562 | 1004-1104 | SP1572 | D101-00 | 1004-1104 |
| SP1490 | 320559 | 1004-1104 | SP1573 | D101-00 | 1004-1104 |
| SP1491 | 320559 | 1004-1104 | SP1574 | D101-00 | 1004-1104 |
| SP1492 | D101-00 | 1004-1104 | SP1575 | D101-00 | 1004-1104 |
| SP1493 | D101-00 | 1004-1104 | SP1578 | D101-00 | 1004-1104 |
| SP1494 | D101-00 | 1004-1104 | SP1580 | D101-00 | 1004-1104 |
| SP1495 | D101-00 | 1004-1104 | SP1581 | D101-00 | 1004-1104 |
| SP1496 | D101-00 | 1004-1104 | SP1582 | D101-00 | 1004-1104 |
| SP1497 | D101-00 | 1004-1104 | SP1583 | D101-00 | 1004-1104 |
| SP1498 | D101-00 | 1004-1104 | SP1584 | D101-00 | 1004-1104 |
| SP1499 | D101-00 | 1004-1104 | SP1585 | D101-00 | 1004-1104 |
| SP15 | 34137 | 1004-1104 | SP1586 | D101-00 | 1004-1104 |
| SP1500 | 320562 | 1004-1104 | SP1587 | D101-00 | 1004-1104 |
| SP1501 | D101-00 | 1004-1104 | SP1588 | D101-00 | 1004-1104 |
| SP1502 | 320559 | 1021-1104 | SP1589 | D101-00 | 1004-1104 |
| SP1503 | 320559 | 1021-1104 | SP1590 | D101-00 | 1004-1104 |
| SP1504 | 320559 | 1021-1104 | SP1591 | D101-00 | 1004-1104 |
| SP1505 | 320559 | 1021-1104 | SP1592 | D101-00 | 1004-1104 |
| SP1506 | 320559 | 1021-1104 | SP1593 | 320562 | 1004-1104 |
| SP1532 | 320570 | 1004-1104 | SP1594 | 320562 | 1004-1104 |
| SP1533 | 320570 | 1004-1104 | SP1595 | D101-00 | 1004-1104 |
| SP1534 | 320570 | 1004-1104 | SP1596 | D101-00 | 1004-1104 |
| SP1535 | 320559 | 1021-1104 | SP1597 | 320559 | 1004-1104 |
| SP1536 | 320559 | 1021-1104 | SP1598 | 320559 | 1004-1104 |
| SP1537 | 320559 | 1021-1104 | SP16 | 34137 | 1004-1104 |
| SP1538 | 320559 | 1021-1104 | SP1600 | 320559 | 1004-1104 |
| SP1539 | 320559 | 1021-1104 | SP1601 | 320559 | 1004-1104 |
| SP1540 | D101-00 | 1004-1104 | SP1602 | 320559 | 1004-1104 |
| SP1541 | D101-00 | 1004-1104 | SP1603 | D101-00 | 1004-1104 |
| SP1542 | D101-00 | 1004-1104 | SP1604 | D101-00 | 1004-1104 |
| SP1543 | 34137 | 1004-1104 | SP1607 | D101-00 | 1004-1104 |
| SP1544 | D101-00 | 1004-1104 | SP1608 | 320559 | 1004-1104 |
| SP1545 | 34137 | 1004-1104 | SP1609 | 320559 | 1004-1104 |
| SP1546 | 34137 | 1004-1104 | SP1610 | 320559 | 1004-1104 |
| SP1547 | 34137 | 1004-1104 | SP1611 | D101-00 | 1004-1104 |
| SP1548 | 34137 | 1004-1104 | SP1612 | 320559 | 1004-1104 |
| SP1549 | 34137 | 1004-1104 | SP1613 | 320559 | 1004-1104 |
| SP1550 | D101-00 | 1004-1104 | SP1614 | 320559 | 1004-1104 |
| SP1555 | 320559 | 1004-1104 | SP1615 | 320559 | 1004-1104 |

| CODE | PART NUMBER | EFF. | CODE | PART NUMBER | EFF. |
|---|---|---|---|---|---|
| SP1616 | 320559 | 1004-1104 | SP1692 | 320562 | 1004-1104 |
| SP1617 | D101-00 | 1004-1104 | SP1693 | 320562 | 1004-1104 |
| SP1618 | D101-00 | 1004-1104 | SP1694 | 320562 | 1004-1104 |
| SP1619 | D101-00 | 1004-1104 | SP1695 | 320562 | 1004-1104 |
| SP162 | 34138 | 1004-1104 | SP1696 | 320562 | 1004-1104 |
| SP1620 | D101-00 | 1004-1104 | SP1697 | 320562 | 1004-1104 |
| SP1621 | 320559 | 1004-1104 | SP1698 | 320562 | 1004-1104 |
| SP1622 | 320559 | 1004-1104 | SP1699 | 320562 | 1004-1104 |
| SP1623 | D101-00 | 1004-1104 | SP17 | 34137 | 1004-1104 |
| SP1624 | D101-00 | 1004-1104 | SP1700 | 320562 | 1004-1104 |
| SP1625 | D101-00 | 1004-1104 | SP1701 | 320562 | 1004-1104 |
| SP1626 | D101-00 | 1004-1104 | SP1707 | 34138 | 1034-1104 |
| SP1627 | 320562 | 1004-1104 | SP1726 | D101-00 | 1004-1104 |
| SP1628 | D101-00 | 1004-1104 | SP1757 | D101-00 | 1004-1104 |
| SP1629 | 320562 | 1004-1104 | SP1758 | D101-00 | 1004-1104 |
| SP163 | 34318 | 1004-1104 | SP1759 | D101-00 | 1004-1104 |
| SP1630 | 320559 | 1004-1104 | SP1760 | D101-00 | 1004-1104 |
| SP1631 | 320559 | 1004-1104 | SP1761 | D101-00 | 1004-1104 |
| SP1632 | 320559 | 1004-1104 | SP1762 | D101-00 | 1004-1104 |
| SP1633 | 320562 | 1004-1104 | SP1763 | D101-00 | 1004-1104 |
| SP1634 | D101-00 | 1004-1104 | SP1765 | D101-00 | 1004-1104 |
| SP1635 | D101-00 | 1004-1104 | SP178 | 32445 | 1004-1104 |
| SP1636 | 320562 | 1004-1104 | SP179 | 32445 | 1004-1104 |
| SP1637 | 320562 | 1004-1104 | SP18 | 34137 | 1004-1104 |
| SP1638 | 320559 | 1004-1104 | SP180 | M7928/5-3 | 1004-1104 |
| SP164 | 34138 | 1004-1104 | SP1800 | 320559 | 1004-1104 |
| SP1642 | D101-00 | 1004-1104 | SP1802 | 320559 | 1004-1104 |
| SP1643 | D101-00 | 1004-1104 | SP1803 | 320559 | 1004-1104 |
| SP165 | 34137 | 1004-1104 | SP1804 | 320562 | 1004-1104 |
| SP1652 | 320559 | 1004-1104 | SP1805 | 320562 | 1004-1104 |
| SP1653 | D101-00 | 1004-1104 | SP181 | M7928/5-3 | 1004-1104 |
| SP1655 | D101-00 | 1004-1104 | SP1810 | 320562 | 1004-1104 |
| SP1656 | D101-00 | 1004-1104 | SP182 | 320559 | 1004-1104 |
| SP1657 | D101-00 | 1004-1104 | SP183 | 320559 | 1004-1104 |
| SP1658 | D101-00 | 1004-1104 | SP1836 | 320559 | 1004-1104 |
| SP166 | 320559 | 1004-1104 | SP1837 | 320559 | 1004-1104 |
| SP167 | 320559 | 1004-1104 | SP1838 | 320559 | 1004-1104 |
| SP168 | 34137 | 1004-1104 | SP1841 | 320559 | 1004-1104 |
| SP169 | 34137 | 1004-1104 | SP1842 | 320559 | 1004-1104 |
| SP1690 | M7928/5-4 | 1004-1104 | SP1843 | 320559 | 1004-1104 |
| SP1691 | M7928/5-4 | 1004-1104 | SP1844 | 320559 | 1004-1104 |

| CODE | PART NUMBER | EFF. | CODE | PART NUMBER | EFF. |
|---|---|---|---|---|---|
| SP1845 | 320559 | 1004-1104 | SP1928 | 320562 | 1004-1104 |
| SP1846 | 320559 | 1004-1104 | SP1929 | 320562 | 1004-1104 |
| SP1848 | 320562 | 1004-1104 | SP193 | M7928/5-3 | 1046-1104 |
| SP1849 | 320562 | 1004-1104 | SP1933 | M7928/5-4 | 1004-1104 |
| SP185 | 32445 | 1004-1104 | SP1935 | M7928/5-4 | 1004-1104 |
| SP1850 | 320559 | 1004-1104 | SP1936 | M7928/5-4 | 1004-1104 |
| SP1851 | 320559 | 1004-1104 | SP1938 | 320559 | 1004-1104 |
| SP1858 | 320559 | 1004-1104 | SP194 | M7928/5-3 | 1046-1104 |
| SP1859 | 320559 | 1004-1104 | SP1944 | 320559 | 1004-1104 |
| SP186 | 320559 | 1004-1104 | SP1945 | 320559 | 1004-1104 |
| SP1860 | 320559 | 1004-1104 | SP1946 | 320562 | 1004-1104 |
| SP187 | 320562 | 1034-1104 | SP1947 | 320562 | 1004-1104 |
| SP1870 | 320559 | 1004-1104 | SP1948 | M7928/5-4 | 1004-1104 |
| SP1871 | 320559 | 1004-1104 | SP195 | M7928/5-4 | 1058-1104 |
| SP1872 | 320559 | 1004-1104 | SP1950 | 320562 | 1004-1033 |
| SP1873 | 320559 | 1004-1104 | SP1951 | 320562 | 1004-1033 |
| SP1874 | 320559 | 1004-1104 | SP1952 | 320562 | 1004-1033 |
| SP1875 | 320559 | 1004-1104 | SP1953 | 320562 | 1004-1033 |
| SP1877 | D101-00 | 1004-1104 | SP1954 | 320562 | 1004-1033 |
| SP1878 | D101-00 | 1004-1104 | SP1955 | 320562 | 1004-1033 |
| SP1879 | D101-00 | 1004-1104 | SP1955 | M7928/5-3 | 1034-1104 |
| SP188 | 320562 | 1034-1104 | SP1956 | 320562 | 1004-1033 |
| SP1880 | D101-00 | 1004-1104 | SP1956 | M7928/5-3 | 1034-1104 |
| SP1881 | D101-00 | 1004-1104 | SP1959 | 320562 | 1004-1104 |
| SP1882 | D101-00 | 1004-1104 | SP196 | D101-00 | 1055-1104 |
| SP1885 | 320562 | 1004-1104 | SP1962 | M7928/5-3 | 1004-1104 |
| SP1886 | 320562 | 1004-1104 | SP1963 | 320559 | 1004-1104 |
| SP1887 | 320562 | 1004-1104 | SP197 | D101-00 | 1055-1104 |
| SP189 | M7928/5-4 | 1041-1104 | SP1975 | 320559 | 1004-1104 |
| SP19 | 34137 | 1004-1104 | SP1976 | 320559 | 1004-1104 |
| SP190 | 320562 | 1052-1104 | SP198 | D101-00 | 1055-1104 |
| SP1909 | M7928/5-3 | 1004-1104 | SP1988 | 320562 | 1004-1104 |
| SP191 | M7928/5-4 | 1046-1104 | SP1989 | 320562 | 1004-1104 |
| SP1910 | M7928/5-3 | 1004-1104 | SP199 | D101-00 | 1055-1104 |
| SP1912 | 320559 | 1004-1104 | SP20 | 34137 | 1004-1040 |
| SP1915 | 320559 | 1004-1104 | SP20 | D101-00 | 1041-1104 |
| SP192 | 320562 | 1046-1049 | SP200 | D101-00 | 1046-1104 |
| SP1924 | 320562 | 1004-1104 | SP2004 | M7928/5-3 | 1058-1104 |
| SP1925 | 320562 | 1004-1104 | SP201 | D101-00 | 1055-1104 |
| SP1926 | 320562 | 1004-1104 | SP2010 | 320559 | 1004-1104 |
| SP1927 | 320562 | 1004-1104 | SP2011 | 320559 | 1004-1104 |

| CODE | PART NUMBER | EFF. | CODE | PART NUMBER | EFF. |
|---|---|---|---|---|---|
| SP2013 | 320559 | 1004-1104 | SP2555 | 320559 | 1004-1104 |
| SP2014 | 320559 | 1004-1104 | SP2558 | D101-00 | 1004-1104 |
| SP2015 | 320559 | 1004-1104 | SP2560 | 320559 | 1004-1104 |
| SP2016 | 320559 | 1004-1104 | SP2561 | D101-00 | 1004-1104 |
| SP2017 | 320559 | 1004-1104 | SP2562 | D101-00 | 1004-1104 |
| SP2018 | 320559 | 1004-1104 | SP2563 | D101-00 | 1004-1104 |
| SP2019 | 320559 | 1004-1104 | SP2564 | D101-00 | 1004-1104 |
| SP202 | D101-00 | 1055-1104 | SP2565 | D101-00 | 1004-1104 |
| SP2020 | 320559 | 1004-1104 | SP2566 | D101-00 | 1004-1104 |
| SP2021 | 320559 | 1004-1104 | SP2567 | D101-00 | 1004-1104 |
| SP2022 | 320559 | 1004-1104 | SP2568 | D101-00 | 1004-1104 |
| SP2023 | 320559 | 1004-1104 | SP2569 | D101-00 | 1004-1104 |
| SP2024 | 320559 | 1004-1104 | SP2570 | D101-00 | 1004-1104 |
| SP2025 | 320559 | 1004-1104 | SP2571 | D101-00 | 1004-1104 |
| SP2026 | 320559 | 1004-1104 | SP2572 | D101-00 | 1004-1104 |
| SP2027 | 320559 | 1004-1104 | SP2573 | D101-00 | 1004-1104 |
| SP2028 | 320559 | 1004-1104 | SP2574 | D101-00 | 1004-1104 |
| SP203 | D101-00 | 1055-1104 | SP2575 | D101-00 | 1004-1104 |
| SP2030 | 320559 | 1004-1104 | SP2576 | D101-00 | 1049-1104 |
| SP2031 | 320559 | 1004-1104 | SP2577 | D101-00 | 1049-1104 |
| SP2035 | 34318 | 1004-1104 | SP2578 | D101-00 | 1049-1104 |
| SP2036 | D101-00 | 1004-1104 | SP2579 | D101-00 | 1049-1104 |
| SP2037 | D101-00 | 1004-1104 | SP2580 | 320562 | 1034-1104 |
| SP2038 | D101-00 | 1004-1104 | SP2581 | 320562 | 1034-1104 |
| SP204 | M7928/5-5 | 1055-1104 | SP2582 | 320562 | 1034-1104 |
| SP205 | M7928/5-5 | 1044-1104 | SP2583 | 320562 | 1034-1104 |
| SP206 | 320570 | 1044-1104 | SP2584 | 320562 | 1034-1104 |
| SP207 | 320562 | 1004-1104 | SP2585 | 320562 | 1034-1104 |
| SP21 | 34137 | 1004-1040 | SP2586 | 320562 | 1034-1104 |
| SP21 | D101-00 | 1041-1104 | SP2587 | 320562 | 1034-1104 |
| SP22 | 34137 | 1004-1104 | SP2588 | 320562 | 1034-1104 |
| SP23 | 34137 | 1004-1104 | SP2589 | 320562 | 1034-1104 |
| SP24 | M7928/5-3 | 1004-1104 | SP2590 | 320562 | 1034-1104 |
| SP25 | M7928/5-3 | 1004-1104 | SP2591 | 320562 | 1034-1104 |
| SP2548 | D101-00 | 1004-1104 | SP2592 | D101-00 | 1034-1104 |
| SP2549 | D101-00 | 1004-1104 | SP2593 | D101-00 | 1034-1104 |
| SP2550 | D101-00 | 1004-1104 | SP2594 | D101-00 | 1034-1104 |
| SP2551 | D101-00 | 1004-1104 | SP2595 | D101-00 | 1034-1104 |
| SP2552 | D101-00 | 1004-1104 | SP2596 | D101-00 | 1034-1104 |
| SP2553 | D101-00 | 1004-1104 | SP2597 | D101-00 | 1034-1104 |
| SP2554 | D101-00 | 1004-1104 | SP2598 | D101-00 | 1034-1104 |

| CODE | PART NUMBER | EFF. | CODE | PART NUMBER | EFF. |
|---|---|---|---|---|---|
| SP2599 | D101-00 | 1034-1104 | SP2660 | D101-00 | 1004-1104 |
| SP26 | 34137 | 1004-1104 | SP2661 | D101-00 | 1004-1104 |
| SP2616 | 34138 | 1004-1104 | SP2662 | D101-00 | 1004-1104 |
| SP2617 | 34138 | 1004-1104 | SP2663 | D101-00 | 1004-1104 |
| SP2618 | 320562 | 1004-1104 | SP2664 | D101-00 | 1004-1104 |
| SP2619 | D101-00 | 1004-1104 | SP2665 | D436-37 | 1004-1104 |
| SP2620 | D101-00 | 1004-1104 | SP2666 | D436-37 | 1004-1104 |
| SP2621 | 320559 | 1004-1104 | SP2667 | D436-37 | 1004-1104 |
| SP2622 | 320559 | 1004-1104 | SP2670 | 320559 | 1004-1104 |
| SP2623 | D101-00 | 1004-1104 | SP2671 | 320559 | 1004-1104 |
| SP2624 | 320559 | 1004-1104 | SP2672 | 320559 | 1004-1104 |
| SP2625 | D101-00 | 1004-1104 | SP2673 | 320559 | 1004-1104 |
| SP2626 | D101-00 | 1004-1104 | SP2674 | 320559 | 1004-1104 |
| SP2627 | D101-00 | 1004-1104 | SP2675 | 320559 | 1004-1104 |
| SP2628 | D101-00 | 1004-1104 | SP2676 | 320559 | 1004-1104 |
| SP2629 | D101-00 | 1004-1104 | SP2677 | 320559 | 1004-1104 |
| SP2630 | D101-00 | 1004-1104 | SP2678 | 320559 | 1004-1104 |
| SP2631 | D101-00 | 1004-1104 | SP2679 | 320559 | 1004-1104 |
| SP2632 | D101-00 | 1004-1104 | SP2691 | D101-00 | 1004-1104 |
| SP2633 | D101-00 | 1004-1104 | SP2692 | D101-00 | 1004-1104 |
| SP2634 | D101-00 | 1004-1104 | SP2693 | D101-00 | 1004-1104 |
| SP2635 | D101-00 | 1004-1104 | SP2694 | D101-00 | 1004-1104 |
| SP2636 | D101-00 | 1004-1104 | SP2695 | D101-00 | 1004-1104 |
| SP2637 | D101-00 | 1004-1104 | SP2696 | D101-00 | 1004-1104 |
| SP2638 | D101-00 | 1004-1104 | SP2697 | D101-00 | 1004-1104 |
| SP2639 | 34138 | 1004-1104 | SP2698 | D101-00 | 1004-1104 |
| SP2640 | D101-00 | 1004-1104 | SP2699 | D101-00 | 1004-1104 |
| SP2641 | D101-00 | 1004-1104 | SP27 | 34137 | 1004-1104 |
| SP2642 | D101-00 | 1004-1104 | SP2700 | D101-00 | 1004-1104 |
| SP2643 | D101-00 | 1004-1104 | SP2701 | D101-00 | 1004-1104 |
| SP2644 | D101-00 | 1004-1104 | SP2702 | D101-00 | 1004-1104 |
| SP2645 | D436-37 | 1004-1104 | SP2703 | D101-00 | 1004-1104 |
| SP2646 | D436-37 | 1004-1104 | SP2704 | D101-00 | 1004-1104 |
| SP2647 | D436-37 | 1004-1104 | SP2705 | D101-00 | 1004-1104 |
| SP2648 | D436-37 | 1004-1104 | SP2706 | D101-00 | 1004-1104 |
| SP2649 | D436-37 | 1004-1104 | SP2707 | D101-00 | 1004-1104 |
| SP2655 | D436-37 | 1004-1104 | SP2708 | D101-00 | 1004-1104 |
| SP2656 | D436-37 | 1004-1104 | SP2715 | 320559 | 1004-1104 |
| SP2657 | D436-37 | 1004-1104 | SP2716 | 320559 | 1004-1104 |
| SP2658 | D436-37 | 1004-1104 | SP2717 | 320559 | 1004-1104 |
| SP2659 | D436-37 | 1004-1104 | SP2718 | 320559 | 1004-1104 |

| CODE | PART NUMBER | EFF. | CODE | PART NUMBER | EFF. |
|---|---|---|---|---|---|
| SP2719 | D101-00 | 1004-1104 | SP2820 | D101-00 | 1004-1104 |
| SP2720 | D101-00 | 1004-1104 | SP2821 | D101-00 | 1004-1104 |
| SP2721 | D101-00 | 1004-1104 | SP2822 | D101-00 | 1004-1104 |
| SP2722 | D101-00 | 1004-1104 | SP2823 | D101-00 | 1004-1104 |
| SP2723 | D101-00 | 1004-1104 | SP2824 | D101-00 | 1004-1104 |
| SP2724 | D101-00 | 1004-1104 | SP2825 | 320559 | 1004-1104 |
| SP2725 | D101-00 | 1004-1104 | SP2826 | 320562 | 1004-1104 |
| SP2726 | D101-00 | 1004-1104 | SP2827 | 320562 | 1004-1104 |
| SP2727 | D101-00 | 1004-1104 | SP2828 | 320562 | 1004-1104 |
| SP2728 | D101-00 | 1004-1104 | SP2841 | D101-00 | 1004-1104 |
| SP2729 | D101-00 | 1004-1104 | SP2842 | D101-00 | 1004-1104 |
| SP2730 | D101-00 | 1004-1104 | SP2843 | D101-00 | 1004-1104 |
| SP2731 | D101-00 | 1004-1104 | SP2844 | D101-00 | 1004-1104 |
| SP2732 | D101-00 | 1004-1104 | SP2845 | D101-00 | 1004-1104 |
| SP2733 | D101-00 | 1004-1104 | SP2846 | D101-00 | 1004-1104 |
| SP2734 | D101-00 | 1004-1104 | SP2847 | D101-00 | 1004-1104 |
| SP2735 | D101-00 | 1004-1104 | SP2848 | D101-00 | 1004-1104 |
| SP2736 | D101-00 | 1004-1104 | SP29 | M7928/5-3 | 1004-1104 |
| SP2737 | D101-00 | 1004-1104 | SP30 | 34318 | 1004-1104 |
| SP2738 | D101-00 | 1004-1104 | SP31 | 34322 | 1034-1104 |
| SP2739 | D101-00 | 1004-1104 | SP32 | 34322 | 1034-1104 |
| SP2740 | D101-00 | 1004-1104 | SP33 | 34322 | 1034-1104 |
| SP2741 | D101-00 | 1004-1104 | SP34 | 34322 | 1034-1104 |
| SP2742 | D101-00 | 1004-1104 | SP38 | 320562 | 1004-1104 |
| SP2743 | D101-00 | 1004-1104 | SP4 | M7928/5-4 | 1004-1104 |
| SP2744 | D101-00 | 1004-1104 | SP41 | 34138 | 1004-1104 |
| SP2745 | D101-00 | 1004-1104 | SP44 | 320562 | 1004-1104 |
| SP2746 | D101-00 | 1004-1104 | SP45 | 320562 | 1004-1104 |
| SP2747 | D101-00 | 1004-1104 | SP46 | 34137 | 1004-1104 |
| SP2748 | D101-00 | 1004-1104 | SP47 | 34137 | 1004-1104 |
| SP2749 | D101-00 | 1004-1104 | SP48 | 34137 | 1004-1104 |
| SP2750 | 320562 | 1004-1104 | SP49 | 34137 | 1004-1104 |
| SP2751 | 320562 | 1004-1104 | SP50 | 34137 | 1004-1104 |
| SP2752 | 320562 | 1004-1104 | SP51 | 34137 | 1004-1104 |
| SP2753 | 320562 | 1004-1104 | SP52 | 34137 | 1004-1104 |
| SP2764 | D101-00 | 1004-1104 | SP53 | 34137 | 1004-1104 |
| SP2765 | D101-00 | 1004-1104 | SP54 | 34138 | 1004-1104 |
| SP2789 | D101-00 | 1004-1104 | SP55 | 34137 | 1004-1104 |
| SP28 | M7928/5-3 | 1004-1104 | SP56 | 34137 | 1004-1104 |
| SP2815 | 320559 | 1004-1104 | SP57 | 34137 | 1004-1104 |
| SP2819 | D101-00 | 1004-1104 | SP58 | 34137 | 1004-1104 |

| CODE | PART NUMBER | EFF. | CODE | PART NUMBER | EFF. |
|---|---|---|---|---|---|
| SP59 | 34138 | 1004-1104 | SP643 | D101-00 | 1004-1104 |
| SP6 | M7928/5-4 | 1004-1104 | SP644 | D101-00 | 1004-1104 |
| SP60 | 34137 | 1004-1104 | SP645 | D101-00 | 1004-1104 |
| SP600 | 320562 | 1004-1104 | SP646 | D101-00 | 1004-1104 |
| SP601 | 320562 | 1004-1104 | SP647 | D101-00 | 1004-1104 |
| SP602 | D101-00 | 1004-1104 | SP648 | D101-00 | 1004-1104 |
| SP603 | D101-00 | 1004-1104 | SP649 | D101-00 | 1004-1104 |
| SP604 | D101-00 | 1004-1104 | SP65 | 34138 | 1004-1104 |
| SP605 | D101-00 | 1004-1104 | SP650 | D101-00 | 1004-1104 |
| SP606 | D101-00 | 1004-1104 | SP651 | D101-00 | 1004-1104 |
| SP608 | D101-00 | 1004-1104 | SP652 | D101-00 | 1004-1104 |
| SP609 | D101-00 | 1004-1104 | SP654 | D101-00 | 1004-1104 |
| SP61 | 34138 | 1004-1104 | SP655 | D101-00 | 1004-1104 |
| SP610 | D101-00 | 1004-1104 | SP656 | D101-00 | 1004-1104 |
| SP612 | D101-00 | 1004-1104 | SP657 | D101-00 | 1004-1104 |
| SP613 | D101-00 | 1004-1104 | SP658 | D101-00 | 1004-1104 |
| SP614 | D101-00 | 1004-1104 | SP659 | D101-00 | 1004-1104 |
| SP615 | D101-00 | 1004-1104 | SP66 | 34138 | 1004-1104 |
| SP617 | D101-00 | 1004-1104 | SP660 | D101-00 | 1004-1104 |
| SP618 | D101-00 | 1004-1104 | SP661 | D101-00 | 1004-1104 |
| SP619 | D101-00 | 1004-1104 | SP662 | D101-00 | 1004-1104 |
| SP62 | 34138 | 1004-1104 | SP663 | D101-00 | 1004-1104 |
| SP620 | D101-00 | 1004-1104 | SP664 | D101-00 | 1004-1104 |
| SP621 | D101-00 | 1004-1104 | SP665 | D101-00 | 1004-1104 |
| SP622 | D101-00 | 1004-1104 | SP666 | D101-00 | 1004-1104 |
| SP623 | D101-00 | 1004-1104 | SP667 | D101-00 | 1004-1104 |
| SP624 | D101-00 | 1004-1104 | SP668 | D101-00 | 1004-1104 |
| SP625 | D101-00 | 1004-1104 | SP669 | D101-00 | 1004-1104 |
| SP626 | D101-00 | 1004-1104 | SP67 | 34137 | 1004-1104 |
| SP627 | D101-00 | 1004-1104 | SP670 | D101-00 | 1004-1104 |
| SP628 | D101-00 | 1004-1104 | SP671 | D101-00 | 1004-1104 |
| SP629 | D101-00 | 1004-1104 | SP672 | D101-00 | 1004-1104 |
| SP63 | 34138 | 1004-1104 | SP673 | D101-00 | 1004-1104 |
| SP630 | 320559 | 1004-1104 | SP674 | D101-00 | 1004-1104 |
| SP634 | D101-00 | 1004-1104 | SP675 | D101-00 | 1004-1104 |
| SP635 | D101-00 | 1004-1104 | SP676 | D101-00 | 1004-1104 |
| SP639 | D101-00 | 1004-1104 | SP677 | D101-00 | 1004-1104 |
| SP64 | D101-00 | 1004-1104 | SP678 | D101-00 | 1004-1104 |
| SP640 | D101-00 | 1004-1104 | SP679 | D101-00 | 1004-1104 |
| SP641 | D101-00 | 1004-1104 | SP68 | 320559 | 1004-1104 |
| SP642 | D101-00 | 1004-1104 | SP680 | D101-00 | 1004-1104 |

| CODE | PART NUMBER | EFF. | CODE | PART NUMBER | EFF. |
|---|---|---|---|---|---|
| SP681 | D101-00 | 1004-1104 | SP726 | D101-00 | 1004-1104 |
| SP682 | D101-00 | 1004-1104 | SP727 | D101-00 | 1004-1104 |
| SP683 | D101-00 | 1004-1104 | SP728 | D101-00 | 1004-1104 |
| SP684 | D101-00 | 1004-1104 | SP729 | D101-00 | 1004-1104 |
| SP685 | D101-00 | 1004-1104 | SP73 | 320559 | 1004-1104 |
| SP687 | D101-00 | 1004-1104 | SP730 | D101-00 | 1004-1104 |
| SP688 | D101-00 | 1004-1104 | SP731 | D101-00 | 1004-1104 |
| SP689 | D101-00 | 1004-1104 | SP732 | D101-00 | 1004-1104 |
| SP690 | D101-00 | 1004-1104 | SP733 | D101-00 | 1004-1104 |
| SP691 | 320562 | 1034-1104 | SP734 | D101-00 | 1004-1104 |
| SP695 | D101-00 | 1004-1104 | SP735 | D101-00 | 1004-1104 |
| SP696 | D101-00 | 1004-1104 | SP736 | D101-00 | 1004-1104 |
| SP697 | D101-00 | 1004-1104 | SP737 | D101-00 | 1004-1104 |
| SP698 | D101-00 | 1004-1104 | SP738 | D101-00 | 1004-1104 |
| SP699 | D101-00 | 1004-1104 | SP739 | D101-00 | 1004-1104 |
| SP700 | D101-00 | 1004-1104 | SP74 | 34138 | 1004-1104 |
| SP701 | D101-00 | 1004-1104 | SP740 | D101-00 | 1004-1104 |
| SP702 | D101-00 | 1004-1104 | SP741 | D101-00 | 1004-1104 |
| SP703 | D101-00 | 1004-1104 | SP742 | D101-00 | 1004-1104 |
| SP704 | D101-00 | 1004-1104 | SP743 | D101-00 | 1004-1104 |
| SP705 | D101-00 | 1004-1104 | SP744 | D101-00 | 1004-1104 |
| SP706 | D101-00 | 1004-1104 | SP745 | D101-00 | 1004-1104 |
| SP707 | D101-00 | 1004-1104 | SP746 | D101-00 | 1004-1104 |
| SP708 | D101-00 | 1004-1104 | SP747 | D101-00 | 1004-1104 |
| SP709 | D101-00 | 1004-1104 | SP748 | D101-00 | 1004-1104 |
| SP710 | D101-00 | 1004-1104 | SP749 | D101-00 | 1004-1104 |
| SP711 | D101-00 | 1004-1104 | SP75 | M7928/5-3 | 1004-1104 |
| SP712 | D101-00 | 1004-1104 | SP750 | D101-00 | 1004-1104 |
| SP713 | D101-00 | 1004-1104 | SP755 | D101-00 | 1004-1104 |
| SP714 | D101-00 | 1004-1104 | SP756 | D101-00 | 1004-1104 |
| SP715 | D101-00 | 1004-1104 | SP757 | D101-00 | 1004-1104 |
| SP716 | D101-00 | 1004-1104 | SP758 | D101-00 | 1004-1104 |
| SP717 | D101-00 | 1004-1104 | SP759 | D101-00 | 1004-1104 |
| SP718 | D101-00 | 1004-1104 | SP76 | 320559 | 1004-1104 |
| SP719 | D101-00 | 1004-1104 | SP760 | D101-00 | 1004-1104 |
| SP720 | D101-00 | 1004-1104 | SP761 | D101-00 | 1004-1104 |
| SP721 | D101-00 | 1004-1104 | SP762 | D101-00 | 1004-1104 |
| SP722 | D101-00 | 1004-1104 | SP763 | D101-00 | 1004-1104 |
| SP723 | D101-00 | 1004-1104 | SP764 | D101-00 | 1004-1104 |
| SP724 | D101-00 | 1004-1104 | SP765 | D101-00 | 1004-1104 |
| SP725 | D101-00 | 1004-1104 | SP766 | D101-00 | 1004-1104 |

| CODE | PART NUMBER | EFF. | CODE | PART NUMBER | EFF. |
|---|---|---|---|---|---|
| SP767 | D101-00 | 1004-1104 | SP806 | D101-00 | 1004-1104 |
| SP768 | D101-00 | 1004-1104 | SP807 | D101-00 | 1004-1104 |
| SP769 | D101-00 | 1004-1104 | SP808 | D101-00 | 1004-1104 |
| SP77 | 320562 | 1004-1104 | SP809 | D101-00 | 1004-1104 |
| SP770 | D101-00 | 1004-1104 | SP810 | D101-00 | 1004-1104 |
| SP771 | D101-00 | 1004-1104 | SP811 | D101-00 | 1004-1104 |
| SP772 | D101-00 | 1004-1104 | SP812 | D101-00 | 1004-1104 |
| SP773 | D101-00 | 1004-1104 | SP813 | D101-00 | 1004-1104 |
| SP774 | D101-00 | 1004-1104 | SP814 | D101-00 | 1004-1104 |
| SP775 | D101-00 | 1004-1104 | SP815 | D101-00 | 1004-1104 |
| SP776 | D101-00 | 1004-1104 | SP816 | D101-00 | 1004-1104 |
| SP777 | D101-00 | 1004-1104 | SP817 | D101-00 | 1004-1104 |
| SP778 | D101-00 | 1004-1104 | SP818 | D101-00 | 1004-1104 |
| SP779 | D101-00 | 1004-1104 | SP819 | D101-00 | 1004-1104 |
| SP78 | 320562 | 1004-1104 | SP82 | D101-00 | 1004-1104 |
| SP780 | D101-00 | 1004-1104 | SP820 | D101-00 | 1004-1104 |
| SP781 | D101-00 | 1004-1104 | SP821 | D101-00 | 1004-1104 |
| SP782 | D101-00 | 1004-1104 | SP823 | D101-00 | 1004-1104 |
| SP783 | D101-00 | 1004-1104 | SP824 | D101-00 | 1004-1104 |
| SP784 | D101-00 | 1004-1104 | SP825 | D101-00 | 1004-1104 |
| SP785 | D101-00 | 1004-1104 | SP826 | D101-00 | 1004-1104 |
| SP786 | D101-00 | 1004-1104 | SP827 | D101-00 | 1004-1104 |
| SP787 | D101-00 | 1004-1104 | SP828 | D101-00 | 1004-1104 |
| SP788 | D101-00 | 1004-1104 | SP829 | D101-00 | 1004-1104 |
| SP789 | D101-00 | 1004-1104 | SP83 | D101-00 | 1004-1104 |
| SP79 | 320559 | 1004-1104 | SP830 | D101-00 | 1004-1104 |
| SP790 | D101-00 | 1004-1104 | SP831 | D101-00 | 1004-1104 |
| SP791 | D101-00 | 1004-1104 | SP832 | D101-00 | 1004-1104 |
| SP792 | D101-00 | 1004-1104 | SP833 | D101-00 | 1004-1104 |
| SP793 | D101-00 | 1004-1104 | SP835 | D101-00 | 1004-1104 |
| SP794 | D101-00 | 1004-1104 | SP836 | D101-00 | 1004-1104 |
| SP795 | D101-00 | 1004-1104 | SP838 | 320559 | 1004-1104 |
| SP796 | D101-00 | 1004-1104 | SP839 | 320559 | 1004-1104 |
| SP797 | D101-00 | 1004-1104 | SP84 | M7928/5-3 | 1004-1104 |
| SP798 | D101-00 | 1004-1104 | SP840 | 320559 | 1004-1104 |
| SP799 | D101-00 | 1004-1104 | SP841 | 320559 | 1004-1104 |
| SP800 | D101-00 | 1004-1104 | SP842 | 320559 | 1004-1104 |
| SP801 | D101-00 | 1004-1104 | SP843 | 320559 | 1004-1104 |
| SP802 | D101-00 | 1004-1104 | SP844 | 320559 | 1004-1104 |
| SP803 | D101-00 | 1004-1104 | SP845 | 320559 | 1004-1104 |
| SP805 | D101-00 | 1004-1104 | SP846 | D101-00 | 1004-1104 |

| CODE | PART NUMBER | EFF. | CODE | PART NUMBER | EFF. |
|---|---|---|---|---|---|
| SP847 | D101-00 | 1004-1104 | SP891 | D101-00 | 1004-1104 |
| SP848 | 320559 | 1004-1104 | SP892 | D101-00 | 1004-1104 |
| SP85 | 34137 | 1004-1104 | SP893 | D101-00 | 1004-1104 |
| SP853 | D101-00 | 1004-1104 | SP894 | D101-00 | 1004-1104 |
| SP854 | D101-00 | 1004-1104 | SP895 | D101-00 | 1004-1104 |
| SP855 | D101-00 | 1004-1104 | SP896 | D101-00 | 1004-1104 |
| SP856 | D101-00 | 1004-1104 | SP897 | D101-00 | 1004-1104 |
| SP857 | D101-00 | 1004-1104 | SP898 | D101-00 | 1004-1104 |
| SP858 | D101-00 | 1004-1104 | SP899 | D101-00 | 1004-1104 |
| SP859 | D101-00 | 1004-1104 | SP9 | 34137 | 1004-1104 |
| SP86 | 34137 | 1004-1104 | SP90 | D101-00 | 1034-1104 |
| SP860 | D101-00 | 1004-1104 | SP900 | D101-00 | 1004-1104 |
| SP861 | D101-00 | 1004-1104 | SP901 | D101-00 | 1004-1104 |
| SP862 | D101-00 | 1004-1104 | SP93 | 320562 | 1004-1104 |
| SP863 | D101-00 | 1004-1104 | SP944 | D101-00 | 1004-1104 |
| SP864 | D101-00 | 1004-1104 | SP945 | D101-00 | 1004-1104 |
| SP865 | D101-00 | 1004-1104 | SP946 | D101-00 | 1004-1104 |
| SP866 | D101-00 | 1004-1104 | SP947 | D101-00 | 1004-1104 |
| SP867 | D101-00 | 1004-1104 | SP948 | D101-00 | 1004-1104 |
| SP868 | D101-00 | 1004-1104 | SP951 | M7928/5-4 | 1004-1104 |
| SP87 | M7928/5-4 | 1004-1104 | SP952 | D101-00 | 1004-1104 |
| SP872 | D101-00 | 1004-1104 | SP953 | D101-00 | 1004-1104 |
| SP873 | D101-00 | 1004-1104 | SP954 | D101-00 | 1004-1104 |
| SP874 | D101-00 | 1004-1104 | SP955 | D101-00 | 1004-1104 |
| SP875 | D101-00 | 1004-1104 | SP957 | D101-00 | 1004-1104 |
| SP876 | D101-00 | 1004-1104 | SP971 | D101-00 | 1004-1104 |
| SP877 | D101-00 | 1004-1104 | SP972 | D101-00 | 1004-1104 |
| SP879 | D101-00 | 1004-1104 | SP973 | D101-00 | 1004-1104 |
| SP88 | M7928/5-4 | 1004-1104 | SP974 | D101-00 | 1004-1104 |
| SP880 | D101-00 | 1004-1104 | SP975 | D101-00 | 1004-1104 |
| SP881 | D101-00 | 1004-1104 | SP976 | D101-00 | 1004-1104 |
| SP882 | D101-00 | 1004-1104 | SP977 | D101-00 | 1004-1104 |
| SP883 | D101-00 | 1004-1104 | SP978 | D101-00 | 1004-1104 |
| SP884 | D101-00 | 1004-1104 | SP985 | D101-00 | 1004-1104 |
| SP885 | D101-00 | 1004-1104 | SP986 | D101-00 | 1004-1104 |
| SP886 | D101-00 | 1004-1104 | SP987 | D101-00 | 1004-1104 |
| SP887 | D101-00 | 1004-1104 | SP988 | D101-00 | 1004-1104 |
| SP888 | D101-00 | 1004-1104 | SP990 | D101-00 | 1004-1104 |
| SP889 | D101-00 | 1004-1104 | SP991 | D101-00 | 1004-1104 |
| SP89 | D101-00 | 1034-1104 | SP992 | D101-00 | 1004-1104 |
| SP890 | D101-00 | 1004-1104 | SP994 | D101-00 | 1004-1104 |

| CODE | PART NUMBER | EFF. | CODE | PART NUMBER | EFF. |
|---|---|---|---|---|---|
| SP995 | D101-00 | 1004-1104 | TB44 | 80-117100-015 | 1004-1104 |
| SP996 | 320559 | 1004-1104 | TB45 | 80K118406-003 | 1004-1104 |
| SP997 | 320559 | 1004-1104 | TB45 | MS27212-1-3 | 1004-1104 |
| SP999 | D101-00 | 1004-1104 | TB46 | GB3540-00 | 1026-1104 |
| SPAT1 | 250092-1 | 1004-1104 | TB600 | MS27212-1-4 | 1004-1104 |
| SPAT10 | 250092-5 | 1004-1104 | TB7 | MS27212-6-8 | 1004-1104 |
| SPAT11 | 250092-5 | 1004-1104 | TC1 | P/O ENGINE | 1004-1104 |
| SPAT12 | 250092-5 | 1004-1104 | TC2 | P/O ENGINE | 1004-1104 |
| SPAT13 | 250092-1 | 1004-1104 | TJ600 | 001104-203-02 | 1004-1104 |
| SPAT14 | 250092-1 | 1004-1104 | TJ600 | 001756-202-02 | 1004-1104 |
| SPAT15 | 250092-1 | 1004-1104 | TR5017 | 453-5060 | optional |
| SPAT16 | 250092-5 | 1004-1104 | TR601 | 622-6152-001 | 1004-1033 |
| SPAT17 | 250092-1 | 1004-1104 | TR601 | 622-6152-011 | 1004-1104 |
| SPAT18 | 250092-5 | 1004-1104 | TR601 | 634-1103-003 | 1004-1104 |
| SPAT19 | 250092-1 | 1004-1104 | TR601 | 822-1113-001 | 1034-1104 |
| SPAT2 | 250092-5 | 1004-1104 | TR602 | 622-6152-001 | 1004-1033 |
| SPAT20 | 250092-5 | 1004-1104 | TR602 | 622-6152-011 | 1004-1104 |
| SPAT3 | 250092-5 | 1004-1104 | TR602 | 634-1103-003 | 1004-1104 |
| SPAT4 | 250092-1 | 1004-1104 | TR602 | 822-1113-011 | 1034-1104 |
| SPAT5 | 250092-1 | 1004-1104 | TR603 | 622-1270-001 | 1004-1104 |
| SPAT6 | 250092-5 | 1004-1104 | TR604 | 622-1270-001 | 1004-1104 |
| SPAT7 | 250092-5 | 1004-1104 | TR604 | 634-1103-002 | 1004-1104 |
| SPAT8 | 250092-1 | 1004-1104 | TR605 | 622-6263-003 | 1004-1104 |
| SPAT9 | 250092-1 | 1004-1104 | TR606 | 622-6263-003 | 1004-1104 |
| TB10 | MS27212-6-5 | 1004-1104 | TR607 | 622-8439-001 | 1004-1104 |
| TB1601 | MS27212-1-6 | 1004-1104 | TR607 | 622-8439-003 | 1019-1104 |
| TB1602 | MS27212-1-6 | 1004-1104 | TR607 | 622-9301-001 | 1004-1104 |
| TB24 | MS27212-1-6 | 1004-1104 | TR607 | 622-9301-003 | 1019-1104 |
| TB25 | MS27212-1-8 | 1004-1104 | TR608 | 063-01007-0000 | 1004-1104 |
| TB3 | MS27212-1-12 | 1004-1104 | TR613 | NTX138-000 | 1004-1104 |
| TB34 | MS27212-1-6 | 1004-1104 | TR614 | 622-9352-005 | 1004-1104 |
| TB35 | MS27212-1-6 | 1004-1104 | TR619 | 622-9210-008 | 1004-1104 |
| TB36 | MS27212-1-4 | 1004-1104 | TR701 | 503-1 | 1004-1104 |
| TB37 | MS27212-1-4 | 1004-1104 | TR702 | 805-11900-001 | 1004-1104 |
| TB38 | MS27212-1-7 | 1004-1104 | TR703 | 805-18000-001 | 1004-1104 |
| TB39 | MS27212-1-7 | 1004-1104 | TR703 | 805-18200-001 | 1004-1104 |
| TB40 | MS27212-1-4 | 1004-1104 | | | |
| TB41 | MS27212-1-4 | 1004-1104 | | | |
| TB42 | MS27212-1-3 | 1004-1104 | | | |

## 3. Part Number to Code List

| PART NUMBER | CODE | EFF. | PART NUMBER | CODE | EFF. |
|---|---|---|---|---|---|
| ( SEE PACKAGE ) | B8 | 1004-1104 | 04TL40TYP1770 | MT27 | 1048-1104 |
| 001104-203-02 | TJ600 | 1004-1104 | 04TL41ATYP1771 | MT24 | 1048-1104 |
| 001756-202-02 | TJ600 | 1004-1104 | 04TL41ATYP1771 | MT25 | 1048-1104 |
| 009-1766-050 | B602 | 1004-1104 | 04TL42TYP1763 | MT16 | 1048-1104 |
| 009-1766-050 | B603 | 1004-1104 | 04TL42TYP1763 | MT17 | 1048-1104 |
| 009-1965-030 | B602 | 1004-1104 | 05DB11ATYP1772 | M52 | 1004-1104 |
| 009-1965-030 | B603 | 1004-1104 | 05DB30TYP1430 | M21 | 1004-1104 |
| 01-0770190-W-12 | DS72 | 1004-1104 | 063-01007-0000 | TR608 | 1004-1104 |
| 01-0770190-W-12 | DS73 | 1004-1104 | 064-01029-0000 | E624 | 1004-1104 |
| 011097 | B30 | 1004-1104 | 066-01124-0000 | AE663 | 1004-1104 |
| 011097 | B31 | 1004-1104 | 066-04011-0003 | AE634 | 1004-1104 |
| 011179 | B28 | 1026-1104 | 066-04011-0039 | AE634 | 1004-1104 |
| 011179 | B29 | 1004-1104 | 066-04012-0032 | AE636 | 1004-1104 |
| 018-1394-100 | E626 | 1004-1104 | 066-04013-0032 | AE636 | 1004-1104 |
| 018-1394-100 | E627 | 1004-1104 | 071-01272-0001 | E624 | 1004-1104 |
| 01TG04TYP1026 | R1 | 1004-1104 | 071-01274-0002 | AE633 | 1004-1104 |
| 01TG04TYP1026 | R2 | 1004-1104 | 071-01290-0000 | E625 | 1004-1104 |
| 02XL05TYP1485 | C13 | 1004-1034 | 071-01292-0001 | AE666 | 1004-1104 |
| 02XL05TYP1485 | C14 | 1004-1034 | 071-01361-0010 | E630 | 1004-1104 |
| 04DB31TYP1400 | M10 | 1004-1104 | 071-01525-0000 | E629 | 1004-1104 |
| 04DB31TYP1400 | M9 | 1004-1104 | 071-04037-0001 | B605 | 1004-1104 |
| 04TL09TYP1031 | MT19 | 1004-1047 | 0851GN1 | HR1 | 1004-1104 |
| 04TL09TYP1107 | MT18 | 1004-1047 | 0851GN2 | HR2 | 1004-1104 |
| 04TL10TYP1032 | MT21 | 1004-1047 | 08DM10TYP1420 | M11 | 1004-1104 |
| 04TL10TYP1108 | MT20 | 1004-1047 | 08DM10TYP1420 | M12 | 1004-1104 |
| 04TL11ATYP1401 | MT23 | 1004-1047 | 100006060 | L17 | 1004-1104 |
| 04TL11ATYP1402 | MT22 | 1004-1047 | 100006149 | E44 | 1004-1104 |
| 04TL12TYP1034 | MT26 | 1004-1047 | 100-40001-00 | E93 | 1004-1104 |
| 04TL12TYP1034 | MT27 | 1004-1047 | 100-40001-00 | E94 | 1004-1104 |
| 04TL13ATYP1450 | MT24 | 1004-1047 | 100-40002-00 | E26 | 1004-1104 |
| 04TL13ATYP1450 | MT25 | 1004-1047 | 100-601200-103 | AE668 | 1004-1104 |
| 04TL21TYP1403 | MT16 | 1035-1047 | 100-602061-000 | E633 | 1004-1104 |
| 04TL21TYP1403 | MT17 | 1035-1047 | 10-102-26 | E643 | 1004-1104 |
| 04TL37ATYP1765 | MT18 | 1048-1104 | 1016-1-11 | AE670 | 1004-1104 |
| 04TL37TYP1764 | MT19 | 1048-1104 | 1018-1-100 | AE698 | 1004-1104 |
| 04TL38ATYP1767 | MT20 | 1048-1104 | 103742-3 | B21 | 1004-1104 |
| 04TL38TYP1766 | MT21 | 1048-1104 | 103744-3 | L8 | 1004-1104 |
| 04TL39ATYP1769 | MT22 | 1048-1104 | 1058-01-12 | AE700 | 1004-1104 |
| 04TL39TYP1768 | MT23 | 1048-1104 | 10704 | E641 | 1004-1104 |
| 04TL40TYP1770 | MT26 | 1048-1104 | 1103P0398 | S103 | 1004-1104 |

| PART NUMBER | CODE | EFF. | PART NUMBER | CODE | EFF. |
|---|---|---|---|---|---|
| 1103P0398 | S104 | 1004-1104 | 1300450-3 | RT22 | 1041-1104 |
| 1103-P0399 | S107 | 1004-1104 | 1300450-3 | RT23 | 1052-1104 |
| 1103-P0399 | S108 | 1004-1104 | 1300570-5 | S185 | 1041-1104 |
| 1103P0570 | S101 | 1004-1104 | 1300570-5 | S186 | 1041-1104 |
| 1103P0570 | S102 | 1004-1104 | 1313 | CR656 | 1004-1104 |
| 1103P0671 | S154 | 1004-1104 | 1313 | CR657 | 1004-1104 |
| 1103P0671 | S155 | 1004-1104 | 133D160-8 | L20 | 1004-1104 |
| 1103PO400 | S156 | 1004-1104 | 13DM08TYP1417 | M13 | 1004-1104 |
| 1103PO400 | S157 | 1004-1104 | 13DM08TYP1417 | M14 | 1004-1104 |
| 1103PO400 | S172 | 1004-1104 | 140-113 | MT58 | 1004-1104 |
| 1103PO400 | S173 | 1004-1104 | 140-113 | MT59 | 1004-1104 |
| 110-92-308 | IC4 | 1004-1104 | 14DM02TYP1399 | M7 | 1004-1104 |
| 110-92-316 | IC3 | 1004-1104 | 14DM02TYP1399 | M8 | 1004-1104 |
| 1116-30-1116 | AE712 | 1004-1104 | 1524 | DS4 | 1004-1104 |
| 1116-40-1116 | AE705 | 1004-1104 | 1524 | DS5 | 1004-1104 |
| 1117-11 | AE704 | 1004-1104 | 15DM12ATYP1419 | M17 | 1004-1104 |
| 1117-1-104 | AE776 | 1004-1104 | 15DM12ATYP1419 | M18 | 1004-1104 |
| 114109001 | L16 | 1004-1104 | 15DM12TYP1418 | M15 | 1004-1104 |
| 1180-21-21 | AE667 | 1004-1104 | 15DM12TYP1418 | M16 | 1004-1104 |
| 1180-30-21 | AE681 | 1004-1104 | 1603-02-03 | AE707 | 1004-1104 |
| 1190-01-1111 | AE679 | 1004-1104 | 1633-01 | AE706 | 1004-1104 |
| 11901 | AE680 | 1004-1104 | 16DM05TYP1432 | M5 | 1004-1104 |
| 11921 | AE696 | 1004-1104 | 16DM05TYP1432 | M6 | 1004-1104 |
| 1192-30-111101 | AE699 | 1004-1104 | 16DM07BTYP1876 | M5 | 1004-1104 |
| 1202-013 | DS1501 | 1004-1038 | 16DM07BTYP1876 | M6 | 1004-1104 |
| 1202-013 | DS1502 | 1004-1104 | 17000-036 | E1675 | 1004-1104 |
| 1202-013 | DS1503 | 1004-1104 | 174B416G3GG5FE | DS614 | 1004-1104 |
| 1-2-1-81-302 | MT28 | 1004-1104 | 18-1030-2 | E1705 | 1004-1104 |
| 1-2-1-81-302 | MT29 | 1004-1104 | 1819710-1 | E39 | 1004-1104 |
| 1250435 | B36 | 1058-1104 | 1819710-2 | E60 | 1004-1104 |
| 125582-1 | MT12 | 1004-1022 | 189-720 | E1725 | 1004-1104 |
| 125582-1 | MT13 | 1004-1022 | 189-720 | E1726 | 1004-1104 |
| 125582-3 | MT12 | 1023-1104 | 1B250-1D1 | PS1 | 1004-1104 |
| 125582-3 | MT13 | 1023-1104 | 1B250-1D1 | PS2 | 1004-1104 |
| 129H | RT601 | 1004-1104 | 1C12-43 | B3 | 1054-1104 |
| 1300330 | B34 | 1058-1104 | 1C12-43 | B4 | 1054-1104 |
| 1300330 | B35 | 1058-1104 | 1C12-43 | B5 | 1054-1104 |
| 1300350-19 | E110 | 1041-1104 | 1C12-43 | B6 | 1054-1104 |
| 1300350-20 | E109 | 1044-1104 | 1D1470-15 | S42 | 1004-1104 |
| 1300440 | RT20 | 1041-1042 | 1D1470-15 | S43 | 1004-1104 |
| 1300440 | RT21 | 1058-1104 | 1E5KE36A | CR232 | 1058-1104 |

| PART NUMBER | CODE | EFF. | PART NUMBER | CODE | EFF. |
|---|---|---|---|---|---|
| 1N2979A | CR653 | 1004-1104 | 1N4007 | CR192 | 1004-1104 |
| 1N2979BR | CR662 | 1004-1104 | 1N4007 | CR193 | 1004-1104 |
| 1N2979BR | CR663 | 1004-1104 | 1N4007 | CR194 | 1004-1104 |
| 1N2979BR | CR727 | 1004-1104 | 1N4007 | CR195 | 1004-1104 |
| 1N4007 | CR10 | 1004-1104 | 1N4007 | CR200 | 1004-1104 |
| 1N4007 | CR104 | 1004-1104 | 1N4007 | CR201 | 1004-1104 |
| 1N4007 | CR106 | 1004-1104 | 1N4007 | CR202 | 1004-1104 |
| 1N4007 | CR107 | 1004-1104 | 1N4007 | CR203 | 1004-1104 |
| 1N4007 | CR11 | 1004-1104 | 1N4007 | CR204 | 1004-1104 |
| 1N4007 | CR120 | 1004-1104 | 1N4007 | CR205 | 1004-1104 |
| 1N4007 | CR121 | 1004-1104 | 1N4007 | CR206 | 1004-1104 |
| 1N4007 | CR122 | 1004-1104 | 1N4007 | CR207 | 1004-1104 |
| 1N4007 | CR123 | 1004-1104 | 1N4007 | CR208 | 1004-1104 |
| 1N4007 | CR137 | 1004-1057 | 1N4007 | CR209 | 1004-1104 |
| 1N4007 | CR138 | 1004-1057 | 1N4007 | CR210 | 1004-1104 |
| 1N4007 | CR139 | 1004-1104 | 1N4007 | CR229 | 1058-1104 |
| 1N4007 | CR140 | 1004-1104 | 1N4007 | CR52 | 1004-1104 |
| 1N4007 | CR141 | 1004-1104 | 1N4007 | CR53 | 1004-1104 |
| 1N4007 | CR144 | 1004-1104 | 1N4007 | CR56 | 1004-1104 |
| 1N4007 | CR145 | 1004-1104 | 1N4007 | CR57 | 1004-1104 |
| 1N4007 | CR157 | 1004-1104 | 1N4007 | CR58 | 1004-1104 |
| 1N4007 | CR158 | 1004-1104 | 1N4007 | CR59 | 1004-1104 |
| 1N4007 | CR160 | 1004-1104 | 1N4007 | CR600 | 1004-1104 |
| 1N4007 | CR161 | 1004-1104 | 1N4007 | CR604 | 1004-1104 |
| 1N4007 | CR163 | 1004-1104 | 1N4007 | CR608 | 1004-1104 |
| 1N4007 | CR164 | 1004-1104 | 1N4007 | CR609 | 1004-1104 |
| 1N4007 | CR165 | 1004-1104 | 1N4007 | CR611 | 1004-1104 |
| 1N4007 | CR167 | 1004-1057 | 1N4007 | CR612 | 1004-1104 |
| 1N4007 | CR168 | 1004-1104 | 1N4007 | CR614 | 1004-1104 |
| 1N4007 | CR169 | 1004-1104 | 1N4007 | CR616 | 1004-1104 |
| 1N4007 | CR177 | 1004-1104 | 1N4007 | CR618 | 1004-1104 |
| 1N4007 | CR178 | 1004-1104 | 1N4007 | CR622 | 1004-1104 |
| 1N4007 | CR179 | 1004-1104 | 1N4007 | CR634 | 1004-1104 |
| 1N4007 | CR180 | 1004-1104 | 1N4007 | CR636 | 1004-1104 |
| 1N4007 | CR181 | 1004-1104 | 1N4007 | CR640 | 1004-1104 |
| 1N4007 | CR182 | 1004-1104 | 1N4007 | CR641 | 1004-1104 |
| 1N4007 | CR184 | 1004-1104 | 1N4007 | CR642 | 1004-1104 |
| 1N4007 | CR186 | 1004-1104 | 1N4007 | CR643 | 1004-1104 |
| 1N4007 | CR187 | 1004-1104 | 1N4007 | CR644 | 1004-1104 |
| 1N4007 | CR190 | 1004-1104 | 1N4007 | CR645 | 1004-1104 |
| 1N4007 | CR191 | 1004-1104 | 1N4007 | CR646 | 1004-1104 |

| PART NUMBER | CODE | EFF. | PART NUMBER | CODE | EFF. |
|---|---|---|---|---|---|
| 1N4007 | CR647 | 1004-1104 | 1N4007 | CR69 | 1004-1104 |
| 1N4007 | CR648 | 1004-1104 | 1N4007 | CR690 | 1004-1104 |
| 1N4007 | CR649 | 1004-1104 | 1N4007 | CR691 | 1004-1104 |
| 1N4007 | CR650 | 1004-1104 | 1N4007 | CR70 | 1004-1104 |
| 1N4007 | CR651 | 1004-1104 | 1N4007 | CR706 | 1004-1104 |
| 1N4007 | CR652 | 1004-1104 | 1N4007 | CR707 | 1004-1104 |
| 1N4007 | CR654 | 1004-1104 | 1N4007 | CR71 | 1004-1104 |
| 1N4007 | CR655 | 1004-1104 | 1N4007 | CR713 | 1004-1104 |
| 1N4007 | CR658 | 1004-1104 | 1N4007 | CR719 | 1004-1104 |
| 1N4007 | CR659 | 1004-1104 | 1N4007 | CR72 | 1004-1104 |
| 1N4007 | CR66 | 1004-1104 | 1N4007 | CR720 | 1004-1104 |
| 1N4007 | CR660 | 1004-1104 | 1N4007 | CR721 | 1004-1104 |
| 1N4007 | CR661 | 1004-1104 | 1N4007 | CR722 | 1004-1104 |
| 1N4007 | CR664 | 1004-1104 | 1N4007 | CR728 | 1004-1104 |
| 1N4007 | CR665 | 1004-1104 | 1N4007 | CR729 | 1004-1104 |
| 1N4007 | CR666 | 1004-1104 | 1N4007 | CR73 | 1004-1104 |
| 1N4007 | CR667 | 1004-1104 | 1N4007 | CR730 | 1004-1104 |
| 1N4007 | CR668 | 1004-1104 | 1N4007 | CR731 | 1004-1104 |
| 1N4007 | CR669 | 1004-1104 | 1N4007 | CR74 | 1004-1104 |
| 1N4007 | CR67 | 1004-1104 | 1N4007 | CR75 | 1004-1104 |
| 1N4007 | CR670 | 1004-1104 | 1N4007 | CR77 | 1004-1104 |
| 1N4007 | CR671 | 1004-1104 | 1N4007 | CR78 | 1004-1104 |
| 1N4007 | CR672 | 1004-1104 | 1N4007 | CR79 | 1026-1104 |
| 1N4007 | CR673 | 1004-1104 | 1N4007 | CR8 | 1004-1104 |
| 1N4007 | CR674 | 1004-1104 | 1N4007 | CR9 | 1004-1104 |
| 1N4007 | CR675 | 1004-1104 | 1N4007 | CR90 | 1004-1104 |
| 1N4007 | CR676 | 1004-1104 | 1N4007 | CR97 | 1004-1104 |
| 1N4007 | CR677 | 1004-1104 | 1N4742 | CR211 | 1004-1104 |
| 1N4007 | CR678 | 1004-1104 | 1N4744 | CR98 | 1004-1104 |
| 1N4007 | CR679 | 1004-1104 | 1N5338-5E1V5W | CR231 | 1058-1104 |
| 1N4007 | CR68 | 1004-1104 | 1N5627 | CR110 | 1004-1104 |
| 1N4007 | CR680 | 1004-1104 | 1N5627 | CR129 | 1004-1104 |
| 1N4007 | CR681 | 1004-1104 | 1N5627 | CR13 | 1004-1104 |
| 1N4007 | CR682 | 1004-1104 | 1N5627 | CR196 | 1004-1104 |
| 1N4007 | CR683 | 1004-1104 | 1N5627 | CR197 | 1004-1104 |
| 1N4007 | CR684 | 1004-1104 | 1N5627 | CR198 | 1004-1104 |
| 1N4007 | CR685 | 1004-1104 | 1N5627 | CR217 | 1004-1104 |
| 1N4007 | CR686 | 1004-1104 | 1N5627 | CR218 | 1004-1104 |
| 1N4007 | CR687 | 1004-1104 | 1N5627 | CR23 | 1004-1104 |
| 1N4007 | CR688 | 1004-1104 | 1N5627 | CR27 | 1004-1104 |
| 1N4007 | CR689 | 1004-1104 | 1N5627 | CR28 | 1004-1104 |

| PART NUMBER | CODE | EFF. | PART NUMBER | CODE | EFF. |
|---|---|---|---|---|---|
| 1N5627 | CR30 | 1004-1104 | 250092-1 | SPAT1 | 1004-1104 |
| 1N5627 | CR34 | 1004-1104 | 250092-1 | SPAT13 | 1004-1104 |
| 1N5627 | CR35 | 1004-1104 | 250092-1 | SPAT14 | 1004-1104 |
| 1N5627 | CR36 | 1004-1104 | 250092-1 | SPAT15 | 1004-1104 |
| 1N5627 | CR50 | 1004-1104 | 250092-1 | SPAT17 | 1004-1104 |
| 1N5627 | CR51 | 1004-1104 | 250092-1 | SPAT19 | 1004-1104 |
| 1N5627 | CR76 | 1004-1104 | 250092-1 | SPAT4 | 1004-1104 |
| 1N6293 | CR49 | 1004-1104 | 250092-1 | SPAT5 | 1004-1104 |
| 1N750A | CR610 | 1004-1104 | 250092-1 | SPAT8 | 1004-1104 |
| 1N750A | CR712 | 1004-1104 | 250092-1 | SPAT9 | 1004-1104 |
| 2-01 | DS27 | 1004-1104 | 250092-5 | SPAT10 | 1004-1104 |
| 2-01 | DS28 | 1004-1104 | 250092-5 | SPAT11 | 1004-1104 |
| 2-01 | DS29 | 1004-1104 | 250092-5 | SPAT12 | 1004-1104 |
| 2-01 | DS30 | 1004-1104 | 250092-5 | SPAT16 | 1004-1104 |
| 2-01 | DS31 | 1004-1104 | 250092-5 | SPAT18 | 1004-1104 |
| 2-01 | DS32 | 1004-1104 | 250092-5 | SPAT2 | 1004-1104 |
| 2-01 | DS33 | 1004-1104 | 250092-5 | SPAT20 | 1004-1104 |
| 2-01 | DS34 | 1004-1104 | 250092-5 | SPAT3 | 1004-1104 |
| 2087-0101 | MC1 | 1004-1104 | 250092-5 | SPAT6 | 1004-1104 |
| 2087-3006 | B33 | 1004-1104 | 250092-5 | SPAT7 | 1004-1104 |
| 2116-30-1116 | AE775 | 1004-1104 | 25100-1-17 | DS1638 | 1004-1104 |
| 2117598-4 | E32 | 1004-1104 | 25100-1-17 | DS1639 | 1004-1104 |
| 2117804-9 | E33 | 1004-1104 | 25100-1-17 | DS1641 | 1004-1104 |
| 213181 | MT54 | 1004-1104 | 25100-1-17 | DS1642 | 1004-1104 |
| 213181 | MT55 | 1004-1104 | 25100-1-20 | DS1643 | 1004-1104 |
| 21-38-4 | E642 | 1004-1104 | 25100-1-20 | DS1644 | 1004-1104 |
| 218C50-65 | S165 | 1004-1104 | 25100-1-23 | DS1621 | 1004-1104 |
| 229-0324-010 | AE628 | 1004-1104 | 25100-1-23 | DS1622 | 1004-1104 |
| 229-0324-020 | AE656 | 1004-1104 | 25100-1-23 | DS1623 | 1004-1104 |
| 23080-019 | MG1 | 1004-1104 | 25100-1-23 | DS1624 | 1004-1104 |
| 23080-019 | MG2 | 1004-1104 | 25100-1-23 | DS1625 | 1004-1104 |
| 23932-011 | ID618 | 1004-1045 | 25100-1-23 | DS1626 | 1004-1104 |
| 24030C2025 | ID606 | 1004-1025 | 25100-1-23 | DS1631 | 1004-1104 |
| 24030-C2125 | ID606 | 1026-1035 | 25100-1-23 | DS1632 | 1004-1104 |
| 24960-4 | L5 | 1004-1104 | 25100-1-23 | DS1633 | 1004-1104 |
| 24960-4 | L6 | 1004-1104 | 25100-1-23 | DS1634 | 1004-1104 |
| 250003-1 | E1691 | 1004-1104 | 25100-1-23 | DS1635 | 1004-1104 |
| 250003-1 | E1692 | 1004-1104 | 25100-1-23 | DS1637 | 1004-1104 |
| 250003-1 | E1693 | 1004-1104 | 2527 | DS1608 | 1004-1104 |
| 250003-1 | E1697 | 1004-1104 | 2527 | DS1609 | 1004-1104 |
| 250003-2 | E1698 | 1004-1104 | 25ET61SF | S2 | 1004-1104 |

| PART NUMBER | CODE | EFF. | PART NUMBER | CODE | EFF. |
|---|---|---|---|---|---|
| 25ET61SF | S3 | 1004-1104 | 320559 | SP1001 | 1004-1104 |
| 261-283 | CR653 | 1004-1104 | 320559 | SP1048 | 1004-1104 |
| 26161 | R122 | 1041-1042 | 320559 | SP1049 | 1004-1104 |
| 261C1385-002 | E618 | 1004-1104 | 320559 | SP1050 | 1004-1062 |
| 261D1389-001 | E617 | 1004-1104 | 320559 | SP1051 | 1004-1062 |
| 270-0930-010 | AE623 | 1004-1104 | 320559 | SP1052 | 1004-1062 |
| 27441482-03 | L7 | 1004-1104 | 320559 | SP1054 | 1004-1104 |
| 280-1-2 | E92 | 1004-1104 | 320559 | SP1055 | 1004-1104 |
| 2860085-101 | L22 | 1004-1104 | 320559 | SP1056 | 1004-1104 |
| 290014 | C600 | 1004-1104 | 320559 | SP1057 | 1004-1104 |
| 2B2401-001-01 | AE685 | 1004-1104 | 320559 | SP1058 | 1004-1104 |
| 2N2222 | Q10 | 1004-1104 | 320559 | SP1059 | 1004-1104 |
| 2N2222 | Q16 | 1004-1104 | 320559 | SP1060 | 1004-1104 |
| 2N2222 | Q17 | 1004-1104 | 320559 | SP1071 | 1004-1104 |
| 2N2222 | Q4 | 1004-1104 | 320559 | SP1072 | 1004-1104 |
| 2N2222 | Q600 | 1004-1104 | 320559 | SP1074 | 1004-1104 |
| 2N2907 | Q11 | 1004-1104 | 320559 | SP1075 | 1004-1104 |
| 2N2907 | Q14 | 1004-1104 | 320559 | SP1076 | 1004-1104 |
| 2N2907 | Q15 | 1004-1104 | 320559 | SP1077 | 1004-1104 |
| 2N6045 | Q12 | 1004-1104 | 320559 | SP1078 | 1004-1104 |
| 2N6045 | Q13 | 1004-1104 | 320559 | SP11 | 1004-1104 |
| 2N6045 | Q2 | 1004-1104 | 320559 | SP1118 | 1004-1104 |
| 2N6045 | Q5 | 1004-1104 | 320559 | SP1134 | 1004-1104 |
| 2N6045 | Q8 | 1004-1104 | 320559 | SP1135 | 1004-1104 |
| 2N6045 | Q9 | 1004-1104 | 320559 | SP1136 | 1004-1104 |
| 3001-147-545-250C5 | E13 | 1004-1104 | 320559 | SP1137 | 1004-1104 |
| 3001-147-545-250C5 | E14 | 1004-1104 | 320559 | SP1138 | 1004-1104 |
| 30-1 | S176 | 1004-1104 | 320559 | SP1139 | 1004-1104 |
| 30-1 | S645 | 1004-1104 | 320559 | SP1140 | 1004-1104 |
| 30-1 | S650 | 1004-1104 | 320559 | SP1141 | 1004-1104 |
| 30100055 | E52 | 1004-1104 | 320559 | SP1142 | 1004-1104 |
| 30100055 | E53 | 1004-1104 | 320559 | SP1143 | 1004-1104 |
| 30104100 | E52 | 1004-1104 | 320559 | SP119 | 1004-1104 |
| 30104100 | E53 | 1004-1104 | 320559 | SP1226 | 1004-1104 |
| 30-1290-5 | DS3 | 1004-1104 | 320559 | SP1227 | 1004-1104 |
| 30-1944-1 | DS10 | 1004-1104 | 320559 | SP1228 | 1004-1104 |
| 30-1944-1 | DS11 | 1004-1104 | 320559 | SP1229 | 1004-1104 |
| 30B1012-9 | S141 | 1004-1104 | 320559 | SP1232 | 1004-1104 |
| 30B1012-9 | S629 | 1004-1104 | 320559 | SP1235 | 1004-1104 |
| 310-1-2 | M1 | 1004-1104 | 320559 | SP1243 | 1004-1104 |
| 31055-001 | BT1 | 1004-1104 | 320559 | SP1244 | 1004-1104 |

| PART NUMBER | CODE | EFF. | PART NUMBER | CODE | EFF. |
|---|---|---|---|---|---|
| 320559 | SP1245 | 1004-1104 | 320559 | SP1602 | 1004-1104 |
| 320559 | SP1281 | 1004-1104 | 320559 | SP1608 | 1004-1104 |
| 320559 | SP1282 | 1004-1104 | 320559 | SP1609 | 1004-1104 |
| 320559 | SP1305 | 1004-1018 | 320559 | SP1610 | 1004-1104 |
| 320559 | SP1308 | 1004-1018 | 320559 | SP1612 | 1004-1104 |
| 320559 | SP1326 | 1004-1104 | 320559 | SP1613 | 1004-1104 |
| 320559 | SP1327 | 1004-1104 | 320559 | SP1614 | 1004-1104 |
| 320559 | SP1339 | 1004-1104 | 320559 | SP1615 | 1004-1104 |
| 320559 | SP1340 | 1004-1104 | 320559 | SP1616 | 1004-1104 |
| 320559 | SP1341 | 1004-1104 | 320559 | SP1621 | 1004-1104 |
| 320559 | SP1366 | 1004-1104 | 320559 | SP1622 | 1004-1104 |
| 320559 | SP1367 | 1004-1104 | 320559 | SP1630 | 1004-1104 |
| 320559 | SP1435 | 1004-1104 | 320559 | SP1631 | 1004-1104 |
| 320559 | SP1455 | 1004-1104 | 320559 | SP1632 | 1004-1104 |
| 320559 | SP1470 | 1004-1104 | 320559 | SP1638 | 1004-1104 |
| 320559 | SP1472 | 1004-1104 | 320559 | SP1652 | 1004-1104 |
| 320559 | SP1473 | 1004-1104 | 320559 | SP166 | 1004-1104 |
| 320559 | SP1475 | 1004-1104 | 320559 | SP167 | 1004-1104 |
| 320559 | SP1476 | 1004-1104 | 320559 | SP1800 | 1004-1104 |
| 320559 | SP1483 | 1004-1104 | 320559 | SP1802 | 1004-1104 |
| 320559 | SP1484 | 1004-1104 | 320559 | SP1803 | 1004-1104 |
| 320559 | SP1485 | 1004-1104 | 320559 | SP182 | 1004-1104 |
| 320559 | SP1487 | 1004-1104 | 320559 | SP183 | 1004-1104 |
| 320559 | SP1490 | 1004-1104 | 320559 | SP1836 | 1004-1104 |
| 320559 | SP1491 | 1004-1104 | 320559 | SP1837 | 1004-1104 |
| 320559 | SP1502 | 1021-1104 | 320559 | SP1838 | 1004-1104 |
| 320559 | SP1503 | 1021-1104 | 320559 | SP1841 | 1004-1104 |
| 320559 | SP1504 | 1021-1104 | 320559 | SP1842 | 1004-1104 |
| 320559 | SP1505 | 1021-1104 | 320559 | SP1843 | 1004-1104 |
| 320559 | SP1506 | 1021-1104 | 320559 | SP1844 | 1004-1104 |
| 320559 | SP1535 | 1021-1104 | 320559 | SP1845 | 1004-1104 |
| 320559 | SP1536 | 1021-1104 | 320559 | SP1846 | 1004-1104 |
| 320559 | SP1537 | 1021-1104 | 320559 | SP1850 | 1004-1104 |
| 320559 | SP1538 | 1021-1104 | 320559 | SP1851 | 1004-1104 |
| 320559 | SP1539 | 1021-1104 | 320559 | SP1858 | 1004-1104 |
| 320559 | SP1555 | 1004-1104 | 320559 | SP1859 | 1004-1104 |
| 320559 | SP1571 | 1004-1104 | 320559 | SP186 | 1004-1104 |
| 320559 | SP1597 | 1004-1104 | 320559 | SP1860 | 1004-1104 |
| 320559 | SP1598 | 1004-1104 | 320559 | SP1870 | 1004-1104 |
| 320559 | SP1600 | 1004-1104 | 320559 | SP1871 | 1004-1104 |
| 320559 | SP1601 | 1004-1104 | 320559 | SP1872 | 1004-1104 |

| PART NUMBER | CODE | EFF. | PART NUMBER | CODE | EFF. |
|---|---|---|---|---|---|
| 320559 | SP1873 | 1004-1104 | 320559 | SP2675 | 1004-1104 |
| 320559 | SP1874 | 1004-1104 | 320559 | SP2676 | 1004-1104 |
| 320559 | SP1875 | 1004-1104 | 320559 | SP2677 | 1004-1104 |
| 320559 | SP1912 | 1004-1104 | 320559 | SP2678 | 1004-1104 |
| 320559 | SP1915 | 1004-1104 | 320559 | SP2679 | 1004-1104 |
| 320559 | SP1938 | 1004-1104 | 320559 | SP2715 | 1004-1104 |
| 320559 | SP1944 | 1004-1104 | 320559 | SP2716 | 1004-1104 |
| 320559 | SP1945 | 1004-1104 | 320559 | SP2717 | 1004-1104 |
| 320559 | SP1963 | 1004-1104 | 320559 | SP2718 | 1004-1104 |
| 320559 | SP1975 | 1004-1104 | 320559 | SP2815 | 1004-1104 |
| 320559 | SP1976 | 1004-1104 | 320559 | SP2825 | 1004-1104 |
| 320559 | SP2010 | 1004-1104 | 320559 | SP630 | 1004-1104 |
| 320559 | SP2011 | 1004-1104 | 320559 | SP68 | 1004-1104 |
| 320559 | SP2013 | 1004-1104 | 320559 | SP73 | 1004-1104 |
| 320559 | SP2014 | 1004-1104 | 320559 | SP76 | 1004-1104 |
| 320559 | SP2015 | 1004-1104 | 320559 | SP79 | 1004-1104 |
| 320559 | SP2016 | 1004-1104 | 320559 | SP838 | 1004-1104 |
| 320559 | SP2017 | 1004-1104 | 320559 | SP839 | 1004-1104 |
| 320559 | SP2018 | 1004-1104 | 320559 | SP840 | 1004-1104 |
| 320559 | SP2019 | 1004-1104 | 320559 | SP841 | 1004-1104 |
| 320559 | SP2020 | 1004-1104 | 320559 | SP842 | 1004-1104 |
| 320559 | SP2021 | 1004-1104 | 320559 | SP843 | 1004-1104 |
| 320559 | SP2022 | 1004-1104 | 320559 | SP844 | 1004-1104 |
| 320559 | SP2023 | 1004-1104 | 320559 | SP845 | 1004-1104 |
| 320559 | SP2024 | 1004-1104 | 320559 | SP848 | 1004-1104 |
| 320559 | SP2025 | 1004-1104 | 320559 | SP996 | 1004-1104 |
| 320559 | SP2026 | 1004-1104 | 320559 | SP997 | 1004-1104 |
| 320559 | SP2027 | 1004-1104 | 320562 | SP1073 | 1004-1104 |
| 320559 | SP2028 | 1004-1104 | 320562 | SP115 | 1004-1104 |
| 320559 | SP2030 | 1004-1104 | 320562 | SP120 | 1004-1104 |
| 320559 | SP2031 | 1004-1104 | 320562 | SP1201 | 1004-1104 |
| 320559 | SP2555 | 1004-1104 | 320562 | SP1202 | 1004-1104 |
| 320559 | SP2560 | 1004-1104 | 320562 | SP1270 | 1004-1104 |
| 320559 | SP2621 | 1004-1104 | 320562 | SP1271 | 1004-1104 |
| 320559 | SP2622 | 1004-1104 | 320562 | SP1428 | 1004-1104 |
| 320559 | SP2624 | 1004-1104 | 320562 | SP1429 | 1004-1104 |
| 320559 | SP2670 | 1004-1104 | 320562 | SP1453 | 1004-1104 |
| 320559 | SP2671 | 1004-1104 | 320562 | SP1462 | 1004-1104 |
| 320559 | SP2672 | 1004-1104 | 320562 | SP1463 | 1004-1104 |
| 320559 | SP2673 | 1004-1104 | 320562 | SP1468 | 1004-1104 |
| 320559 | SP2674 | 1004-1104 | 320562 | SP1486 | 1004-1104 |

| PART NUMBER | CODE | EFF. |
|---|---|---|
| 320562 | SP1488 | 1004-1104 |
| 320562 | SP1489 | 1004-1104 |
| 320562 | SP1500 | 1004-1104 |
| 320562 | SP1593 | 1004-1104 |
| 320562 | SP1594 | 1004-1104 |
| 320562 | SP1627 | 1004-1104 |
| 320562 | SP1629 | 1004-1104 |
| 320562 | SP1633 | 1004-1104 |
| 320562 | SP1636 | 1004-1104 |
| 320562 | SP1637 | 1004-1104 |
| 320562 | SP1692 | 1004-1104 |
| 320562 | SP1693 | 1004-1104 |
| 320562 | SP1694 | 1004-1104 |
| 320562 | SP1695 | 1004-1104 |
| 320562 | SP1696 | 1004-1104 |
| 320562 | SP1697 | 1004-1104 |
| 320562 | SP1698 | 1004-1104 |
| 320562 | SP1699 | 1004-1104 |
| 320562 | SP1700 | 1004-1104 |
| 320562 | SP1701 | 1004-1104 |
| 320562 | SP1804 | 1004-1104 |
| 320562 | SP1805 | 1004-1104 |
| 320562 | SP1810 | 1004-1104 |
| 320562 | SP1848 | 1004-1104 |
| 320562 | SP1849 | 1004-1104 |
| 320562 | SP187 | 1034-1104 |
| 320562 | SP188 | 1034-1104 |
| 320562 | SP1885 | 1004-1104 |
| 320562 | SP1886 | 1004-1104 |
| 320562 | SP1887 | 1004-1104 |
| 320562 | SP190 | 1052-1104 |
| 320562 | SP192 | 1046-1049 |
| 320562 | SP1924 | 1004-1104 |
| 320562 | SP1925 | 1004-1104 |
| 320562 | SP1926 | 1004-1104 |
| 320562 | SP1927 | 1004-1104 |
| 320562 | SP1928 | 1004-1104 |
| 320562 | SP1929 | 1004-1104 |
| 320562 | SP1946 | 1004-1104 |
| 320562 | SP1947 | 1004-1104 |
| 320562 | SP1950 | 1004-1033 |
| 320562 | SP1951 | 1004-1033 |
| 320562 | SP1952 | 1004-1033 |
| 320562 | SP1953 | 1004-1033 |
| 320562 | SP1954 | 1004-1033 |
| 320562 | SP1955 | 1004-1033 |
| 320562 | SP1956 | 1004-1033 |
| 320562 | SP1959 | 1004-1104 |
| 320562 | SP1988 | 1004-1104 |
| 320562 | SP1989 | 1004-1104 |
| 320562 | SP207 | 1004-1104 |
| 320562 | SP2580 | 1034-1104 |
| 320562 | SP2581 | 1034-1104 |
| 320562 | SP2582 | 1034-1104 |
| 320562 | SP2583 | 1034-1104 |
| 320562 | SP2584 | 1034-1104 |
| 320562 | SP2585 | 1034-1104 |
| 320562 | SP2586 | 1034-1104 |
| 320562 | SP2587 | 1034-1104 |
| 320562 | SP2588 | 1034-1104 |
| 320562 | SP2589 | 1034-1104 |
| 320562 | SP2590 | 1034-1104 |
| 320562 | SP2591 | 1034-1104 |
| 320562 | SP2618 | 1004-1104 |
| 320562 | SP2750 | 1004-1104 |
| 320562 | SP2751 | 1004-1104 |
| 320562 | SP2752 | 1004-1104 |
| 320562 | SP2753 | 1004-1104 |
| 320562 | SP2826 | 1004-1104 |
| 320562 | SP2827 | 1004-1104 |
| 320562 | SP2828 | 1004-1104 |
| 320562 | SP38 | 1004-1104 |
| 320562 | SP44 | 1004-1104 |
| 320562 | SP45 | 1004-1104 |
| 320562 | SP600 | 1004-1104 |
| 320562 | SP601 | 1004-1104 |
| 320562 | SP691 | 1034-1104 |
| 320562 | SP77 | 1004-1104 |
| 320562 | SP78 | 1004-1104 |
| 320562 | SP93 | 1004-1104 |
| 320570 | SP1532 | 1004-1104 |
| 320570 | SP1533 | 1004-1104 |

| PART NUMBER | CODE | EFF. | PART NUMBER | CODE | EFF. |
|---|---|---|---|---|---|
| 320570 | SP1534 | 1004-1104 | 34137 | SP47 | 1004-1104 |
| 320570 | SP206 | 1044-1104 | 34137 | SP48 | 1004-1104 |
| 32445 | SP178 | 1004-1104 | 34137 | SP49 | 1004-1104 |
| 32445 | SP179 | 1004-1104 | 34137 | SP50 | 1004-1104 |
| 32445 | SP185 | 1004-1104 | 34137 | SP51 | 1004-1104 |
| 3337LB21C | ID611 | 1038-1104 | 34137 | SP52 | 1004-1104 |
| 3337LB21C | ID622 | 1004-1038 | 34137 | SP53 | 1004-1104 |
| 34137 | SP10 | 1004-1104 | 34137 | SP55 | 1004-1104 |
| 34137 | SP1174 | 1004-1104 | 34137 | SP56 | 1004-1104 |
| 34137 | SP12 | 1004-1104 | 34137 | SP57 | 1004-1104 |
| 34137 | SP123 | 1031-1104 | 34137 | SP58 | 1004-1104 |
| 34137 | SP124 | 1031-1104 | 34137 | SP60 | 1004-1104 |
| 34137 | SP1241 | 1004-1104 | 34137 | SP67 | 1004-1104 |
| 34137 | SP1242 | 1004-1104 | 34137 | SP85 | 1004-1104 |
| 34137 | SP127 | 1031-1104 | 34137 | SP86 | 1004-1104 |
| 34137 | SP128 | 1031-1104 | 34137 | SP9 | 1004-1104 |
| 34137 | SP13 | 1004-1104 | 34138 | SP1173 | 1004-1104 |
| 34137 | SP1323 | 1004-1104 | 34138 | SP1320 | 1004-1104 |
| 34137 | SP1324 | 1004-1104 | 34138 | SP1321 | 1004-1104 |
| 34137 | SP14 | 1004-1104 | 34138 | SP1322 | 1004-1104 |
| 34137 | SP15 | 1004-1104 | 34138 | SP162 | 1004-1104 |
| 34137 | SP1543 | 1004-1104 | 34138 | SP164 | 1004-1104 |
| 34137 | SP1545 | 1004-1104 | 34138 | SP1707 | 1034-1104 |
| 34137 | SP1546 | 1004-1104 | 34138 | SP2616 | 1004-1104 |
| 34137 | SP1547 | 1004-1104 | 34138 | SP2617 | 1004-1104 |
| 34137 | SP1548 | 1004-1104 | 34138 | SP2639 | 1004-1104 |
| 34137 | SP1549 | 1004-1104 | 34138 | SP41 | 1004-1104 |
| 34137 | SP16 | 1004-1104 | 34138 | SP54 | 1004-1104 |
| 34137 | SP165 | 1004-1104 | 34138 | SP59 | 1004-1104 |
| 34137 | SP168 | 1004-1104 | 34138 | SP61 | 1004-1104 |
| 34137 | SP169 | 1004-1104 | 34138 | SP62 | 1004-1104 |
| 34137 | SP17 | 1004-1104 | 34138 | SP63 | 1004-1104 |
| 34137 | SP18 | 1004-1104 | 34138 | SP65 | 1004-1104 |
| 34137 | SP19 | 1004-1104 | 34138 | SP66 | 1004-1104 |
| 34137 | SP20 | 1004-1040 | 34138 | SP74 | 1004-1104 |
| 34137 | SP21 | 1004-1040 | 34318 | SP163 | 1004-1104 |
| 34137 | SP22 | 1004-1104 | 34318 | SP2035 | 1004-1104 |
| 34137 | SP23 | 1004-1104 | 34318 | SP30 | 1004-1104 |
| 34137 | SP26 | 1004-1104 | 34322 | SP31 | 1034-1104 |
| 34137 | SP27 | 1004-1104 | 34322 | SP32 | 1034-1104 |
| 34137 | SP46 | 1004-1104 | 34322 | SP33 | 1034-1104 |

| PART NUMBER | CODE | EFF. | PART NUMBER | CODE | EFF. |
|---|---|---|---|---|---|
| 34322 | SP34 | 1034-1104 | 4306-29 | DS77 | 1004-1104 |
| 3500-30-64 | S170 | 1004-1104 | 4306-30 | DS613 | 1004-1104 |
| 3500-30-64 | S171 | 1004-1104 | 4306-4 | DS602 | 1004-1104 |
| 3500-30-64 | S78 | 1004-1104 | 4306-6 | DS65 | 1004-1015 |
| 3500-30-64 | S79 | 1004-1104 | 4306-7 | DS71 | 1004-1104 |
| 3500-4-24 | S138 | 1004-1090 | 4306-8 | DS69 | 1004-1104 |
| 3500-4-24 | S139 | 1004-1090 | 4306-9 | S119 | 1004-1104 |
| 3500-4-24 | S23 | 1004-1090 | 4-3100DUE1HBF | S167 | 1004-1104 |
| 3500-4-24 | S26 | 1004-1090 | 4-3100DUE1HBF | S168 | 1004-1025 |
| 3500-4-50 | S168 | 1026-1104 | 44YY29493 | S20 | 1004-1104 |
| 357-8999-020 | E605 | 1004-1104 | 453-5060 | TR5017 | optional |
| 39-3 | S141 | 1004-1104 | 473-189-000 | E632 | 1004-1104 |
| 39-3 | S629 | 1004-1104 | 476665 | B30 | 1004-1104 |
| 39-775 | L32 | 1004-1104 | 476665 | B31 | 1004-1104 |
| 3A63.42.50F05.1.MB | ID618 | 1046-1104 | 4A16.42.60F05.1.CA | ID608 | 1042-1104 |
| 3D2381-06 | L1 | 1004-1104 | 4B1E126 | K1602 | 1004-1104 |
| 3D2381-06 | L2 | 1004-1104 | 4B1E126 | K601 | 1004-1104 |
| 3D2485-22 | E28 | 1004-1104 | 4B1E126 | K604 | 1004-1104 |
| 3MC3-3-2 | CB5 | 1004-1033 | 4B1E126 | K620 | 1004-1104 |
| 3MC3-3-2 | CB6 | 1004-1033 | 4B1E126 | K622 | 1004-1104 |
| 403-4300 | S58 | 1004-1018 | 4B1E126 | K625 | 1004-1104 |
| 403-4300 | S59 | 1004-1018 | 4B1E126 | K626 | 1004-1104 |
| 4202 | F19 | 1004-1104 | 4B1E126 | K628 | 1004-1104 |
| 4202 | F21 | 1044-1104 | 4B1E126 | K629 | 1004-1104 |
| 4202 | F26 | 1004-1104 | 4B1E126 | K637 | 1004-1104 |
| 42-895 | E96 | 1004-1104 | 4B1E126 | K639 | 1004-1104 |
| 4306-1 | DS41 | 1004-1104 | 4TL1-1A | S61 | 1004-1104 |
| 4306-10 | S120 | 1004-1104 | 501-1204-01 | GY601 | 1004-1104 |
| 4306-11 | DS603 | 1004-1104 | 501-1204-01 | GY610 | 1004-1104 |
| 4306-12 | DS604 | 1004-1104 | 501-1482-01 | AE626 | 1004-1104 |
| 4306-18 | DS74 | 1004-1104 | 501-1902-01 | GY611 | 1004-1104 |
| 4306-19 | DS65 | 1016-1104 | 503-1 | TR701 | 1004-1104 |
| 4306-2 | DS42 | 1004-1104 | 503-4 | AE760 | 1004-1104 |
| 4306-20 | DS600 | 1004-1104 | 503-7 | AE759 | 1004-1104 |
| 4306-21 | DS611 | 1004-1104 | 504-0035-914 | GY611 | 1004-1104 |
| 4306-22 | DS607 | 1004-1104 | 5146-00-1 | L20 | 1037-1104 |
| 4306-23 | S643 | 1004-1104 | 51539-013C | E1 | 1004-1104 |
| 4306-23 | S644 | 1004-1104 | 51539-013C | E2 | 1004-1104 |
| 4306-24 | S641 | 1004-1104 | 520814 | E43 | 1004-1104 |
| 4306-24 | S642 | 1004-1104 | 53-1995 | S70 | 1004-1104 |
| 4306-25 | S1603 | 1004-1104 | 54B1 | RT6 | 1004-1104 |

| PART NUMBER | CODE | EFF. | PART NUMBER | CODE | EFF. |
|---|---|---|---|---|---|
| 54YY2288 | S62 | 1004-1104 | 622-6174-001 | AE648 | 1004-1104 |
| 55050-1168 | M24 | 1004-1104 | 622-6197-002 | ID624 | 1004-1104 |
| 5506-SG5-Y | ID632 | 1004-1104 | 622-6199-001 | AE650 | 1004-1104 |
| 581-911 | S119 | 1004-1104 | 622-6200-003 | AE652 | 1004-1104 |
| 581-911 | S120 | 1004-1104 | 622-6263-003 | TR605 | 1004-1104 |
| 5C15.42.35K05.1.BA | ID606 | 1036-1104 | 622-6263-003 | TR606 | 1004-1104 |
| 5C15.42.35K05.1.BF | ID606 | 1004-1104 | 622-6520-005 | AE603 | 1004-1033 |
| 60-0026-1 | DS7 | 1004-1104 | 622-6520-005 | AE604 | 1004-1033 |
| 60-2799-1 | E7 | 1004-1104 | 622-6521-013 | AE601 | 1004-1104 |
| 60-2799-1 | E8 | 1004-1104 | 622-6521-013 | AE602 | 1004-1104 |
| 6041H144 | K27 | 1004-1104 | 622-6522-005 | AE609 | 1004-1104 |
| 6041H144 | K28 | 1004-1104 | 622-6522-013 | AE635 | 1004-1104 |
| 622-1270-001 | TR603 | 1004-1104 | 622-6523-005 | AE605 | 1004-1104 |
| 622-1270-001 | TR604 | 1004-1104 | 622-6523-205 | AE711 | 1004-1104 |
| 622-2506-006 | ID611 | 1039-1104 | 622-6590-001 | AE607 | 1004-1104 |
| 622-2506-006 | ID622 | 1039-1104 | 622-6785-021 | ID605 | 1004-1013 |
| 622-2855-001 | AE649 | 1004-1033 | 622-6785-121 | ID605 | 1014-1025 |
| 622-2855-011 | AE649 | 1034-1104 | 622-6785-131 | ID605 | 1026-1037 |
| 622-2923-035 | ID621 | 1004-1020 | 622-6793-001 | E626 | 1004-1104 |
| 622-3975-011 | ID609 | 1004-1104 | 622-6793-001 | E627 | 1004-1104 |
| 622-4160-011 | ID630 | 1004-1104 | 622-7154-001 | AE659 | 1004-1104 |
| 622-4782-001 | ID607 | 1004-1104 | 622-7154-001 | AE660 | 1004-1104 |
| 622-5734-001 | AE630 | 1004-1104 | 622-7154-002 | AE657 | 1004-1104 |
| 622-5734-001 | AE631 | 1004-1104 | 622-7154-002 | AE658 | 1004-1104 |
| 622-5734-001 | AE632 | 1004-1104 | 622-7154-002 | E97 | 1004-1104 |
| 622-5812-001 | MT601 | 1004-1104 | 622-7382-101 | RE603 | 1004-1104 |
| 622-5812-001 | MT640 | 1004-1104 | 622-7382-101 | RE605 | 1004-1104 |
| 622-6019-001 | AE627 | 1004-1104 | 622-7383-001 | E607 | 1004-1104 |
| 622-6020-022 | ID627 | 1004-1104 | 622-7384-001 | E613 | 1004-1104 |
| 622-6020-022 | ID629 | 1004-1104 | 622-7876-012 | ID628 | 1004-1104 |
| 622-6136-002 | GY603 | 1004-1104 | 622-7890-018 | AE629 | 1004-1104 |
| 622-6136-002 | GY608 | 1004-1104 | 622-8051-002 | AE643 | 1004-1058 |
| 622-6137-001 | RE601 | 1004-1031 | 622-8393-004 | AE646 | 1004-1104 |
| 622-6137-001 | RE602 | 1004-1031 | 622-8393-014 | AE646 | 1019-1104 |
| 622-6137-201 | RE601 | 1032-1104 | 622-8439-001 | TR607 | 1004-1104 |
| 622-6137-201 | RE602 | 1032-1104 | 622-8439-003 | TR607 | 1019-1104 |
| 622-6152-001 | TR601 | 1004-1033 | 622-8678-002 | AE641 | 1004-1033 |
| 622-6152-001 | TR602 | 1004-1033 | 622-8678-008 | AE641 | 1004-1104 |
| 622-6152-011 | TR601 | 1004-1104 | 622-8678-014 | AE641 | 1034-1104 |
| 622-6152-011 | TR602 | 1004-1104 | 622-8679-002 | AE640 | 1004-1033 |
| 622-6174-001 | AE647 | 1004-1104 | 622-8679-008 | AE640 | 1004-1104 |

| PART NUMBER | CODE | EFF. |
|---|---|---|
| 622-8679-014 | AE640 | 1034-1104 |
| 622-8692-003 | AE643 | 1004-1058 |
| 622-9116-014 | AE645 | 1004-1104 |
| 622-9210-008 | TR619 | 1004-1104 |
| 622-9301-001 | TR607 | 1004-1104 |
| 622-9301-003 | TR607 | 1019-1104 |
| 622-9304-004 | AE646 | 1004-1104 |
| 622-9304-014 | AE646 | 1019-1104 |
| 622-9352-005 | TR614 | 1004-1104 |
| 622-9462-035 | ID621 | 1021-1104 |
| 622-9849-012 | ID628 | 1004-1104 |
| 631421-029 | S657 | 1004-1104 |
| 631421-029 | S658 | 1004-1104 |
| 631421-033 | S660 | 1004-1104 |
| 63245-390 | DS1663 | 1004-1104 |
| 63245-390 | DS1664 | 1004-1104 |
| 63245-470 | DS1645 | 1004-1104 |
| 63245-470 | DS1646 | 1004-1104 |
| 63245-470 | DS1648 | 1004-1104 |
| 63245-560 | DS1647 | 1004-1104 |
| 63245-560 | DS1649 | 1004-1104 |
| 63245-560 | DS1650 | 1004-1104 |
| 63245-560 | DS1651 | 1004-1104 |
| 63245-560 | DS1659 | 1004-1104 |
| 63245-620 | DS1652 | 1004-1104 |
| 63245-620 | DS1653 | 1004-1104 |
| 63245-620 | DS1654 | 1004-1104 |
| 63245-620 | DS1655 | 1004-1104 |
| 63245-620 | DS1656 | 1004-1104 |
| 63245-620 | DS1657 | 1004-1104 |
| 63245-620 | DS1658 | 1004-1104 |
| 63245-620 | DS1660 | 1004-1104 |
| 634-1103-002 | TR604 | 1004-1104 |
| 634-1103-003 | TR601 | 1004-1104 |
| 634-1103-003 | TR602 | 1004-1104 |
| 634-4320-002 | ID629 | 1004-1104 |
| 64300-000 | HT601 | 1004-1104 |
| 64300-000 | HT602 | 1004-1104 |
| 64415 | M22 | 1004-1104 |
| 653-1-50 | AE1700 | 1004-1104 |
| 653-512-15 | AE1700-E | 1004-1104 |
| 66T | MK601 | 1004-1031 |
| 66T | MK602 | 1004-1031 |
| 66TRA | MK601 | 1032-1104 |
| 66TRA | MK602 | 1032-1104 |
| 6704960-A1 | DS1802 | 1004-1104 |
| 6704960-A1 | DS1803 | 1004-1104 |
| 6704960-A1 | DS1804 | 1004-1104 |
| 6704960-A1 | DS1805 | 1004-1104 |
| 6704960-A1 | DS1808 | 1004-1104 |
| 6704960-A1 | DS1809 | 1004-1104 |
| 6704960-A1 | DS1810 | 1004-1104 |
| 6704960-A1 | DS1811 | 1004-1104 |
| 6895-S-4-X-3-3 | AE709 | 1004-1104 |
| 6930A/21-38 | E642 | 1004-1104 |
| 6978 | HR10 | 1010-1104 |
| 70-0196-1 | E6 | 1004-1104 |
| 7101KZQE | S603 | 1004-1104 |
| 7101KZQE | S646 | 1004-1104 |
| 7108P3YZQE | S169 | 1004-1104 |
| 712D126 | K652 | 1004-1104 |
| 712D26 | K624 | 1004-1104 |
| 712D26 | K632 | 1004-1104 |
| 7201P3 | S631 | 1004-1104 |
| 7201P3 | S633 | 1004-1104 |
| 7201P3 | S639 | 1004-1104 |
| 7201P3 | S640 | 1004-1104 |
| 7201P3YZQ | S175 | 1004-1104 |
| 7201P3YZQ | S647 | 1004-1104 |
| 720-299 | M22 | 1004-1104 |
| 7203P3 | S637 | 1004-1104 |
| 7205L42YZQ | S60 | 1004-1104 |
| 7205L42YZQ | S65 | 1004-1104 |
| 7205P3 | S630 | 1023-1104 |
| 7205P3 | S652 | 1004-1104 |
| 7236-1-200 | CBR1 | 1004-1104 |
| 7236-1-200 | CBR2 | 1004-1104 |
| 727-0433/01 | E1823A | 1004-1104 |
| 727-0433/01 | E1893A | 1004-1104 |
| 727-0433/02 | E1874 | 1004-1104 |
| 727-0433/02 | E1884 | 1004-1104 |
| 727-0434/01 | E1951 | 1046-1104 |

| PART NUMBER | CODE | EFF. | PART NUMBER | CODE | EFF. |
|---|---|---|---|---|---|
| 727-0436/01 | E1630 | 1032-1032 | 763-1-1101 | E1665A | 1004-1104 |
| 727-0436/01 | E1633 | 1032-1032 | 763-1-1101 | E1666 | 1004-1104 |
| 727-0436/01 | E1822 | 1004-1105 | 763-1-1101 | E1666A | 1004-1104 |
| 727-0436/01 | E1892 | 1004-1104 | 763-1-1101 | E1667 | 1004-1104 |
| 727-0437/01 | E1855A | 1004-1104 | 763-1-1101 | E1667A | 1004-1104 |
| 727-0437/01 | E1865A | 1004-1104 | 763-1-1101 | E1668A | 1004-1104 |
| 727-0437/01 | E1875A | 1004-1104 | 763-1-1101 | E1669A | 1004-1104 |
| 727-0437/01 | E1885A | 1004-1104 | 763-1-1204 | E1671A | 1004-1104 |
| 727-0437/01 | E1905A | 1004-1104 | 763-1-1204 | E1672A | 1004-1104 |
| 727-0437/01 | E1915A | 1004-1104 | 763-1-201 | E1634 | 1004-1104 |
| 727-0437/02 | E1926 | 1004-1104 | 763-1-301 | E1610 | 1004-1104 |
| 727-0439/02 | E47 | 1073-1104 | 763-1-801 | E1630 | 1004-1104 |
| 727-0443/01 | E51 | 1004-1104 | 763-1-801 | E1633 | 1004-1104 |
| 727-0444/01 | E54 | 1004-1104 | 763-1-801 | E1651 | 1004-1104 |
| 727-1-1 | E1600 | 1004-1104 | 763-1-801 | E1652 | 1004-1104 |
| 727-1-1 | E1800 | 1004-1104 | 787-6173-217 | ID626 | 1004-1104 |
| 727-1-1 | E1810 | 1004-1104 | 792778-1 | RT2 | 1004-1104 |
| 727-751-4 | E1600 | 1004-1104 | 80-115467-401 | E57 | 1019-1104 |
| 727-751-4 | E1800 | 1004-1104 | 80-115467-403 | E58 | 1019-1104 |
| 727-751-4 | E1810 | 1004-1104 | 80-115469-002 | E58 | 1004-1018 |
| 731263 | C600 | 1004-1104 | 80-115470-401 | E57 | 1004-1018 |
| 7401P3YZQ | S50 | 1004-1104 | 80-117100-015 | TB44 | 1004-1104 |
| 7401P3YZQ | S654 | 1004-1104 | 80-117101-( ) | E95 | 1004-1104 |
| 7403P3YZQ | S656 | 1004-1104 | 80-117920-801 | E38 | 1004-1104 |
| 7413P3YZQE | S659 | 1004-1104 | 80-118157-403 | PCB13 | 1041-1104 |
| 743-1-1 | E1690 | 1004-1104 | 80-118157-403 | PCB16 | 1004-1104 |
| 750659-3 | S63 | 1004-1104 | 80-118157-405 | PCB22 | 1004-1104 |
| 750659-3 | S64 | 1004-1104 | 80-118157-407 | PCB13 | 1004-1015 |
| 750665-1 | S99 | 1004-1104 | 80-118172-401 | E89 | 1004-1015 |
| 754661-4 | E12 | 1004-1104 | 80-118176-801 | E31 | 1004-1004 |
| 754691-1 | RT1 | 1004-1104 | 80-118176-803 | E30 | 1004-1015 |
| 754822-2 | R3 | 1004-1104 | 80-118176-805 | E31 | 1006-1015 |
| 763-1-1001 | E1627 | 1004-1104 | 80-118176-807 | E31 | 1016-1033 |
| 763-1-1001 | E1628 | 1004-1104 | 80-118176-809 | E30 | 1016-1040 |
| 763-1-1001 | E1629 | 1004-1104 | 80-118176-811 | E31 | 1034-1104 |
| 763-1-1001 | E1631 | 1004-1104 | 80-118176-813 | E30 | 1054-1054 |
| 763-1-1001 | E1632 | 1004-1104 | 80-118176-817 | E30 | 1058-1104 |
| 763-1-1001 | E1636 | 1004-1104 | 80-118187-401 | E22 | 1004-1015 |
| 763-1-1001 | E1639 | 1004-1104 | 80-118190-401 | PCB2 | 1004-1015 |
| 763-1-1001 | E1664 | 1004-1104 | 80-118210-401 | E42 | 1004-1015 |
| 763-1-1101 | E1626A | 1004-1104 | 80-118213-401 | PCB3 | 1004-1015 |

| PART NUMBER | CODE | EFF. |
|---|---|---|
| 80-118232-401 | AE637 | 1004-1015 |
| 80-118235-401 | PCB7 | 1004-1015 |
| 80-118236-401 | E25 | 1004-1015 |
| 80-118239-401 | PCB12 | 1004-1015 |
| 80-118241-401 | E50 | 1004-1009 |
| 80-118241-403 | E50 | 1010-1015 |
| 80-118244-401 | PCB6 | 1004-1015 |
| 80-118246-401 | E34 | 1004-1104 |
| 80-118249-401 | PCB4 | 1004-1104 |
| 80-118251-401 | PCB13 | 1004-1015 |
| 80-118252-401 | E40 | 1004-1009 |
| 80-118252-403 | E40 | 1050-1051 |
| 80-118252-405 | E40 | 1058-1104 |
| 80-118255-401 | AE661 | 1004-1104 |
| 80-118303-401 | PCB8 | 1004-1015 |
| 80-118308-401 | E89 | 1016-1104 |
| 80-118311-401 | PCB13 | 1016-1104 |
| 80-118312-401 | PCB2 | 1016-1104 |
| 80-118313-401 | E42 | 1016-1104 |
| 80-118315-401 | PCB3 | 1016-1104 |
| 80-118316-401 | AE637 | 1016-1104 |
| 80-118319-401 | PCB7 | 1016-1104 |
| 80-118320-401 | E25 | 1016-1104 |
| 80-118322-401 | PCB12 | 1016-1104 |
| 80-118324-401 | PCB6 | 1016-1104 |
| 80-118325-401 | E22 | 1016-1104 |
| 80-118327-401 | E50 | 1054-1054 |
| 80-118327-403 | E50 | 1052-1053 |
| 80-118327-405 | E50 | 1097-1104 |
| 80-118330-401 | PCB10 | 1046-1049 |
| 80-118331-401 | PCB11 | 1004-1015 |
| 80-118333-401 | E98 | 1004-1104 |
| 80-118336-401 | PCB15 | 1004-1104 |
| 80-118346-801 | E99 | 1004-1104 |
| 80-118399-401 | PCB30 | 1058-1104 |
| 80-118754-401 | PCB33 | 1100-1104 |
| 80-208170-401 | E4 | 1004-1009 |
| 80-208170-403 | E4 | 1010-1033 |
| 80-208170-405 | E4 | 1045-1045 |
| 80-208170-407 | E4 | 1046-1049 |
| 80-208170-409 | E4 | 1057-1057 |
| 80-208170-411 | E4 | 1002-1002 |
| 80-208170-411 | E4 | 1058-1104 |
| 80-208177-401 | PCB1 | 1004-1104 |
| 805-10003-001 | E647 | 1004-1104 |
| 805-11900-001 | TR702 | 1004-1104 |
| 805-18000-001 | TR703 | 1004-1104 |
| 805-18200-001 | TR703 | 1004-1104 |
| 80-908106-801 | E1700 | 1039-1104 |
| 80-908209-401 | E1700 | 1004-1104 |
| 80-908209-405 | E1700 | 1004-1104 |
| 80-908209-409 | E1700 | 1004-1104 |
| 80-908209-411 | E1700 | 1004-1104 |
| 80-908209-413 | E1700 | 1004-1104 |
| 80-908209-415 | E1700 | 1004-1104 |
| 80-908209-417 | E1700 | 1004-1104 |
| 80-908209-419 | E1700 | 1004-1104 |
| 80-909526-011 | DS1800 | 1004-1104 |
| 80-909526-011 | DS1801 | 1004-1104 |
| 80-909526-011 | DS1806 | 1004-1104 |
| 80-909526-011 | DS1807 | 1004-1104 |
| 80-909580-801 | B1801 | 1004-1104 |
| 80-909580-801 | B1803 | 1004-1104 |
| 80-909580-801 | B1805 | 1004-1104 |
| 80-909580-801 | B1807 | 1004-1104 |
| 80-909580-802 | B1800 | 1004-1104 |
| 80-909580-802 | B1802 | 1004-1104 |
| 80-909580-802 | B1804 | 1004-1104 |
| 80-909580-802 | B1806 | 1004-1104 |
| 80K118338-801 | E30 | 1004-1104 |
| 80K118340-401 | PCB14 | 1004-1104 |
| 80K118341-401 | AE639 | 1004-1104 |
| 80K118349-801 | E30 | 1004-1104 |
| 80K118353-401 | E30 | 1004-1104 |
| 80K118365-801 | E30 | 1004-1104 |
| 80K118382-401 | AE665 | 1004-1104 |
| 80K118384-801 | E30 | 1004-1104 |
| 80K118386-401 | AE688 | 1004-1104 |
| 80K118386-403 | AE664 | 1004-1104 |
| 80K118386-405 | AE713 | 1004-1104 |
| 80K118390-801 | E30 | 1004-1104 |
| 80K118392-401 | E101 | 1004-1104 |

| PART NUMBER | CODE | EFF. | PART NUMBER | CODE | EFF. |
|---|---|---|---|---|---|
| 80K118395-401 | PCB16 | 1004-1104 | 80K208208-401 | E105 | 1004-1104 |
| 80K118397-801 | E31 | 1004-1104 | 80K208212-801 | E4 | 1004-1104 |
| 80K118400-801 | E30 | 1078-1078 | 80K208217-801 | E4 | 1004-1104 |
| 80K118404-801 | E30 | 1004-1104 | 80K208217-803 | E4 | 1004-1104 |
| 80K118406-003 | TB45 | 1004-1104 | 80K208218-801 | E4 | 1004-1104 |
| 80K118409-401 | AE669 | 1004-1104 | 80K208218-803 | E4 | 1004-1104 |
| 80K118409-403 | AE777 | 1004-1104 | 80K208223-801 | E4 | 1004-1104 |
| 80K118420-801 | E30 | 1004-1104 | 80K208228-801 | E4 | 1004-1104 |
| 80K118422-401 | E40 | 1004-1104 | 81035-1 | E1701 | 1004-1104 |
| 80K118432-801 | E30 | 1004-1104 | 822-0370-460 | AE643 | 1059-1104 |
| 80K118439-001 | DS76 | 1004-1104 | 822-1113-001 | TR601 | 1034-1104 |
| 80K118440-401 | AE651 | 1004-1104 | 822-1113-011 | TR602 | 1034-1104 |
| 80K118443-401 | PCB20 | 1004-1104 | 822-1120-005 | AE603 | 1034-1104 |
| 80K118456-401 | PCB24 | 1004-1104 | 822-1120-005 | AE604 | 1034-1104 |
| 80K118457-401 | AE682 | 1004-1104 | 822-1807-001 | AE717 | 1004-1104 |
| 80K118462-801 | E30 | 1004-1104 | 83720-2 | L20 | 1004-1036 |
| 80K118465-401 | AE691 | 1004-1104 | 871FA311 | E91 | 1004-1104 |
| 80K118465-403 | AE765 | 1004-1104 | 90102-100 | AE693 | 1004-1104 |
| 80K118482-001 | FT605 | 1004-1104 | 90-38401 | E102 | 1004-1104 |
| 80K118482-001 | FT607 | 1004-1104 | 90-38401 | E29 | 1004-1104 |
| 80K118487-401 | AE653 | 1004-1104 | 90-38601 | E47 | 1004-1072 |
| 80K118489-801 | E30 | 1004-1104 | 90-38701 | E5 | 1004-1104 |
| 80K118491-401 | PCB21 | 1004-1104 | 909648-401 | E621 | 1004-1104 |
| 80K118493-801 | E30 | 1004-1104 | 909648-402 | E622 | 1004-1104 |
| 80K118497-801 | AE697 | 1004-1104 | 910023-524 | AE683 | 1004-1104 |
| 80K118635-000 | E30 | 1004-1104 | 914034 | RP601 | 1004-1104 |
| 80K118682-401 | AE764 | 1004-1104 | 914034 | RP602 | 1004-1104 |
| 80K118683-401 | PCB28 | 1004-1104 | 914035-1 | AE684 | 1004-1104 |
| 80K118706-401 | E111 | 1004-1104 | 914035-2 | AE694 | 1004-1104 |
| 80K118708-401 | PCB31 | 1004-1104 | 97-2374 | S183 | 1058-1104 |
| 80K118713-401 | AE767 | 1004-1104 | 97-2375 | S184 | 1058-1104 |
| 80K118724-401 | E648 | 1004-1104 | 990-3334-382 | AE619 | 1066-1104 |
| 80K118727-401 | PCB32 | 1004-1104 | 990-3334-382 | AE620 | 1066-1104 |
| 80K118741-401 | AE778 | 1004-1104 | 990-3334-383 | AE619 | 1066-1104 |
| 80K118747-401 | AE779 | 1004-1104 | 990-3334-383 | AE620 | 1066-1104 |
| 80K118757-401 | AE769 | 1004-1104 | 9B-03508-72 | AE772 | 1059-1104 |
| 80K198186-401 | E640 | 1004-1104 | 9D-80130-32 | AE766 | 1004-1104 |
| 80K198186-405 | E640 | 1004-1104 | A1815A7A41 | DS5 | 1004-1104 |
| 80K208200-801 | E4 | 1004-1104 | A1815A8A41 | DS4 | 1004-1104 |
| 80K208203-801 | E4 | 1004-1104 | A2064-14-1683 | DS67 | 1004-1104 |
| 80K208206-401 | PCB17 | 1004-1104 | A2064-14-1683 | DS8 | 1004-1104 |

| PART NUMBER | CODE | EFF. |
|---|---|---|
| A360 | DS1607 | 1004-1104 |
| A360 | DS1640 | 1004-1104 |
| A43-500FKS1-2 | R69 | 1004-1104 |
| A43S10KFKS1-2 | R9 | 1004-1104 |
| A703R | K1 | 1004-1104 |
| A703R | K2 | 1004-1104 |
| A703R | K3 | 1004-1104 |
| A703R | K4 | 1004-1104 |
| A703R | K6 | 1004-1104 |
| A703R | K7 | 1004-1104 |
| A703T | K8 | 1004-1104 |
| A703T | K9 | 1004-1104 |
| AN3155-25-25 | R17 | 1004-1104 |
| AP25-0071-00 | DS1501 | 1039-1104 |
| AP25-0071-00 | DS1502 | 1039-1104 |
| AP25-0071-00 | DS1503 | 1039-1104 |
| B1035-JHMB-HXU7 | AE619 | 1004-1104 |
| B1035-JHMB-HXU7 | AE620 | 1004-1104 |
| B1035-JHMJ-HUJ7 | AE619 | 1004-1065 |
| B1035-JHMJ-HUJ7 | AE620 | 1004-1065 |
| B1035-JHMJ-HUJ7 | AE702 | 1004-1104 |
| B1035-JPMJ-HUJ7 | AE619 | 1004-1104 |
| B1035-JPMJ-HUJ7 | AE620 | 1004-1104 |
| B57364S109M | R5 | Substitute |
| B57364S109M | R6 | Substitute |
| B9700-1-307 | DS75 | 1004-1104 |
| BAT49 | CR230 | 1058-1104 |
| BYLB51824 | B24 | 1004-1104 |
| BYLB51824 | B25 | 1004-1104 |
| BZ2RQ1T | S1602 | 1004-1104 |
| C132275-5 | B17 | 1004-1104 |
| C132275-6 | B16 | 1004-1104 |
| C136066-3 | B18 | 1004-1013 |
| C136066-3 | B19 | 1004-1013 |
| C136066-4 | B18 | 1014-1033 |
| C136066-4 | B19 | 1014-1033 |
| C136407-2 | E48 | 1096-1096 |
| C136407-3 | E48 | 1097-1104 |
| C152550-1 | B18 | 1096-1096 |
| C152550-1 | B19 | 1096-1096 |
| C155720-2 | B18 | 1092-1095 |
| C155720-2 | B18 | 1097-1104 |
| C155720-2 | B19 | 1092-1095 |
| C155720-2 | B19 | 1097-1104 |
| C2006 | S601 | 1004-1018 |
| C2006 | S602 | 1004-1018 |
| C2006 | S605 | 1004-1018 |
| C2006 | S606 | 1004-1018 |
| C2006 | S635 | 1004-1018 |
| C2006R | S56 | 1004-1018 |
| C2006R | S57 | 1004-1018 |
| C2350L4M23 | M3 | 1004-1104 |
| C70190-1 | DS72 | 1004-1104 |
| C70190-1 | DS73 | 1004-1104 |
| CI 1114 | AE701 | 1004-1104 |
| CI509 | AE703 | 1004-1104 |
| CL10 | R7 | 1004-1104 |
| CL100 | R5 | 1004-1104 |
| CL100 | R6 | 1004-1104 |
| CRLK103M15X7RFV | C1 | 1004-1104 |
| CRLK103M15X7RFV | C10 | 1004-1104 |
| CRLK103M15X7RFV | C16 | 1004-1104 |
| CRLK103M15X7RFVAWA | C4 | 1004-1104 |
| CRLK104M30X7RFV | C7 | 1004-1104 |
| CRLK104M30X7RFV | C8 | 1004-1104 |
| CS402-5 | S94 | 1004-1104 |
| CS402-5 | S95 | 1004-1104 |
| CS500-040-D4A | K100 | 1004-1104 |
| CS500-040-D4A | K101 | 1004-1104 |
| D101-00 | SP1000 | 1004-1104 |
| D101-00 | SP1002 | 1004-1104 |
| D101-00 | SP1003 | 1004-1104 |
| D101-00 | SP1004 | 1004-1104 |
| D101-00 | SP1005 | 1004-1104 |
| D101-00 | SP1006 | 1004-1104 |
| D101-00 | SP1007 | 1004-1104 |
| D101-00 | SP1008 | 1004-1104 |
| D101-00 | SP1009 | 1004-1104 |
| D101-00 | SP1010 | 1004-1104 |
| D101-00 | SP1011 | 1004-1104 |
| D101-00 | SP1012 | 1004-1104 |
| D101-00 | SP1013 | 1004-1104 |

| PART NUMBER | CODE | EFF. | PART NUMBER | CODE | EFF. |
|---|---|---|---|---|---|
| D101-00 | SP1014 | 1004-1104 | D101-00 | SP1067 | 1004-1104 |
| D101-00 | SP1015 | 1004-1104 | D101-00 | SP1068 | 1004-1104 |
| D101-00 | SP1016 | 1004-1104 | D101-00 | SP1069 | 1004-1104 |
| D101-00 | SP1017 | 1004-1104 | D101-00 | SP1070 | 1004-1104 |
| D101-00 | SP1018 | 1004-1104 | D101-00 | SP1079 | 1004-1104 |
| D101-00 | SP1019 | 1004-1104 | D101-00 | SP1080 | 1004-1104 |
| D101-00 | SP1020 | 1004-1104 | D101-00 | SP1084 | 1004-1104 |
| D101-00 | SP1021 | 1004-1104 | D101-00 | SP1085 | 1004-1104 |
| D101-00 | SP1022 | 1004-1104 | D101-00 | SP1086 | 1004-1104 |
| D101-00 | SP1023 | 1004-1104 | D101-00 | SP1087 | 1004-1104 |
| D101-00 | SP1024 | 1004-1104 | D101-00 | SP1088 | 1004-1104 |
| D101-00 | SP1025 | 1004-1104 | D101-00 | SP1089 | 1004-1104 |
| D101-00 | SP1026 | 1004-1104 | D101-00 | SP1090 | 1004-1104 |
| D101-00 | SP1027 | 1004-1104 | D101-00 | SP1091 | 1004-1104 |
| D101-00 | SP1028 | 1004-1104 | D101-00 | SP1092 | 1004-1104 |
| D101-00 | SP1029 | 1004-1104 | D101-00 | SP1093 | 1004-1104 |
| D101-00 | SP1030 | 1004-1104 | D101-00 | SP1094 | 1004-1104 |
| D101-00 | SP1031 | 1004-1104 | D101-00 | SP1095 | 1004-1104 |
| D101-00 | SP1032 | 1004-1104 | D101-00 | SP1096 | 1004-1104 |
| D101-00 | SP1033 | 1004-1104 | D101-00 | SP1097 | 1004-1104 |
| D101-00 | SP1034 | 1004-1104 | D101-00 | SP1098 | 1004-1104 |
| D101-00 | SP1035 | 1004-1104 | D101-00 | SP1099 | 1004-1104 |
| D101-00 | SP1036 | 1004-1104 | D101-00 | SP1100 | 1004-1104 |
| D101-00 | SP1037 | 1004-1104 | D101-00 | SP1101 | 1004-1104 |
| D101-00 | SP1038 | 1004-1104 | D101-00 | SP1102 | 1004-1104 |
| D101-00 | SP1039 | 1004-1104 | D101-00 | SP1103 | 1004-1104 |
| D101-00 | SP1040 | 1004-1104 | D101-00 | SP1108 | 1004-1104 |
| D101-00 | SP1041 | 1004-1104 | D101-00 | SP1109 | 1004-1104 |
| D101-00 | SP1042 | 1004-1104 | D101-00 | SP1110 | 1004-1104 |
| D101-00 | SP1043 | 1004-1104 | D101-00 | SP1111 | 1004-1104 |
| D101-00 | SP1044 | 1004-1104 | D101-00 | SP1112 | 1004-1104 |
| D101-00 | SP1045 | 1004-1104 | D101-00 | SP1113 | 1004-1104 |
| D101-00 | SP1046 | 1004-1104 | D101-00 | SP1114 | 1004-1104 |
| D101-00 | SP1047 | 1004-1104 | D101-00 | SP1115 | 1004-1104 |
| D101-00 | SP1053 | 1004-1104 | D101-00 | SP1116 | 1004-1104 |
| D101-00 | SP1061 | 1004-1104 | D101-00 | SP1117 | 1004-1104 |
| D101-00 | SP1062 | 1004-1104 | D101-00 | SP1119 | 1004-1104 |
| D101-00 | SP1063 | 1004-1104 | D101-00 | SP1120 | 1004-1104 |
| D101-00 | SP1064 | 1004-1104 | D101-00 | SP1122 | 1004-1104 |
| D101-00 | SP1065 | 1004-1104 | D101-00 | SP1123 | 1004-1104 |
| D101-00 | SP1066 | 1004-1104 | D101-00 | SP1124 | 1004-1104 |

| PART NUMBER | CODE | EFF. | PART NUMBER | CODE | EFF. |
|---|---|---|---|---|---|
| D101-00 | SP1125 | 1004-1104 | D101-00 | SP1203 | 1004-1104 |
| D101-00 | SP1126 | 1004-1104 | D101-00 | SP1204 | 1004-1104 |
| D101-00 | SP1127 | 1004-1104 | D101-00 | SP1205 | 1004-1104 |
| D101-00 | SP1128 | 1004-1104 | D101-00 | SP1206 | 1004-1104 |
| D101-00 | SP1129 | 1004-1104 | D101-00 | SP1207 | 1004-1104 |
| D101-00 | SP1130 | 1004-1104 | D101-00 | SP1208 | 1004-1104 |
| D101-00 | SP1131 | 1004-1104 | D101-00 | SP1209 | 1004-1104 |
| D101-00 | SP1132 | 1004-1104 | D101-00 | SP1210 | 1004-1104 |
| D101-00 | SP1133 | 1004-1104 | D101-00 | SP1211 | 1004-1104 |
| D101-00 | SP1153 | 1004-1104 | D101-00 | SP1212 | 1004-1104 |
| D101-00 | SP1154 | 1004-1104 | D101-00 | SP1213 | 1004-1104 |
| D101-00 | SP1155 | 1004-1104 | D101-00 | SP1214 | 1004-1104 |
| D101-00 | SP1156 | 1004-1104 | D101-00 | SP1215 | 1004-1104 |
| D101-00 | SP1157 | 1004-1104 | D101-00 | SP1216 | 1004-1104 |
| D101-00 | SP1158 | 1004-1104 | D101-00 | SP1217 | 1004-1104 |
| D101-00 | SP1159 | 1004-1104 | D101-00 | SP1218 | 1004-1104 |
| D101-00 | SP1160 | 1004-1104 | D101-00 | SP1219 | 1022-1104 |
| D101-00 | SP1161 | 1004-1104 | D101-00 | SP1220 | 1022-1104 |
| D101-00 | SP1162 | 1004-1104 | D101-00 | SP1221 | 1022-1104 |
| D101-00 | SP1163 | 1004-1104 | D101-00 | SP1222 | 1022-1104 |
| D101-00 | SP1167 | 1004-1104 | D101-00 | SP1223 | 1004-1104 |
| D101-00 | SP1168 | 1004-1104 | D101-00 | SP1224 | 1004-1104 |
| D101-00 | SP1169 | 1004-1104 | D101-00 | SP1225 | 1004-1104 |
| D101-00 | SP1170 | 1004-1104 | D101-00 | SP1230 | 1004-1104 |
| D101-00 | SP1171 | 1004-1104 | D101-00 | SP1231 | 1004-1104 |
| D101-00 | SP1172 | 1004-1104 | D101-00 | SP1233 | 1004-1104 |
| D101-00 | SP1175 | 1004-1104 | D101-00 | SP1234 | 1004-1104 |
| D101-00 | SP1176 | 1004-1104 | D101-00 | SP1236 | 1004-1104 |
| D101-00 | SP1177 | 1004-1104 | D101-00 | SP1237 | 1004-1104 |
| D101-00 | SP1178 | 1004-1104 | D101-00 | SP1238 | 1004-1104 |
| D101-00 | SP1179 | 1004-1104 | D101-00 | SP1239 | 1004-1104 |
| D101-00 | SP1191 | 1004-1104 | D101-00 | SP1240 | 1004-1104 |
| D101-00 | SP1192 | 1004-1104 | D101-00 | SP1246 | 1004-1104 |
| D101-00 | SP1193 | 1004-1104 | D101-00 | SP1247 | 1004-1104 |
| D101-00 | SP1194 | 1004-1104 | D101-00 | SP1248 | 1004-1104 |
| D101-00 | SP1195 | 1004-1104 | D101-00 | SP1249 | 1004-1104 |
| D101-00 | SP1196 | 1004-1104 | D101-00 | SP125 | 1031-1104 |
| D101-00 | SP1197 | 1004-1104 | D101-00 | SP1250 | 1004-1104 |
| D101-00 | SP1198 | 1004-1104 | D101-00 | SP1251 | 1004-1104 |
| D101-00 | SP1199 | 1004-1104 | D101-00 | SP1252 | 1004-1104 |
| D101-00 | SP1200 | 1004-1104 | D101-00 | SP1253 | 1004-1104 |

| PART NUMBER | CODE | EFF. | PART NUMBER | CODE | EFF. |
|---|---|---|---|---|---|
| D101-00 | SP1254 | 1004-1104 | D101-00 | SP1332 | 1004-1104 |
| D101-00 | SP1255 | 1004-1104 | D101-00 | SP1333 | 1004-1104 |
| D101-00 | SP1256 | 1004-1104 | D101-00 | SP1334 | 1004-1104 |
| D101-00 | SP126 | 1031-1104 | D101-00 | SP1335 | 1004-1104 |
| D101-00 | SP1260 | 1004-1104 | D101-00 | SP1336 | 1004-1104 |
| D101-00 | SP1262 | 1004-1104 | D101-00 | SP1338 | 1004-1104 |
| D101-00 | SP1268 | 1004-1104 | D101-00 | SP1357 | 1004-1104 |
| D101-00 | SP1269 | 1004-1104 | D101-00 | SP1358 | 1004-1104 |
| D101-00 | SP1273 | 1004-1104 | D101-00 | SP1359 | 1004-1104 |
| D101-00 | SP1275 | 1004-1104 | D101-00 | SP1360 | 1004-1104 |
| D101-00 | SP1276 | 1004-1104 | D101-00 | SP1361 | 1004-1104 |
| D101-00 | SP1278 | 1004-1104 | D101-00 | SP1362 | 1004-1104 |
| D101-00 | SP1279 | 1004-1104 | D101-00 | SP1363 | 1004-1104 |
| D101-00 | SP1283 | 1004-1104 | D101-00 | SP1364 | 1004-1104 |
| D101-00 | SP1284 | 1004-1104 | D101-00 | SP1368 | 1004-1104 |
| D101-00 | SP1285 | 1004-1104 | D101-00 | SP1369 | 1004-1104 |
| D101-00 | SP1289 | 1004-1104 | D101-00 | SP1370 | 1004-1104 |
| D101-00 | SP129 | 1031-1104 | D101-00 | SP1371 | 1004-1104 |
| D101-00 | SP1290 | 1004-1104 | D101-00 | SP1375 | 1004-1104 |
| D101-00 | SP1291 | 1004-1104 | D101-00 | SP1376 | 1004-1104 |
| D101-00 | SP1292 | 1004-1104 | D101-00 | SP1378 | 1004-1104 |
| D101-00 | SP1293 | 1004-1104 | D101-00 | SP1379 | 1004-1104 |
| D101-00 | SP1294 | 1004-1104 | D101-00 | SP1382 | 1004-1104 |
| D101-00 | SP1295 | 1004-1104 | D101-00 | SP1383 | 1004-1104 |
| D101-00 | SP1296 | 1004-1104 | D101-00 | SP1384 | 1004-1104 |
| D101-00 | SP1297 | 1004-1104 | D101-00 | SP1385 | 1004-1104 |
| D101-00 | SP1298 | 1004-1104 | D101-00 | SP1386 | 1004-1104 |
| D101-00 | SP1299 | 1004-1104 | D101-00 | SP1387 | 1004-1104 |
| D101-00 | SP130 | 1031-1104 | D101-00 | SP1388 | 1004-1104 |
| D101-00 | SP1302 | 1004-1104 | D101-00 | SP1399 | 1004-1104 |
| D101-00 | SP1309 | 1004-1104 | D101-00 | SP1400 | 1004-1104 |
| D101-00 | SP1310 | 1004-1104 | D101-00 | SP1412 | 1004-1104 |
| D101-00 | SP1311 | 1004-1104 | D101-00 | SP1413 | 1004-1104 |
| D101-00 | SP1312 | 1004-1104 | D101-00 | SP1414 | 1004-1104 |
| D101-00 | SP1313 | 1004-1104 | D101-00 | SP1415 | 1004-1104 |
| D101-00 | SP1314 | 1004-1104 | D101-00 | SP1416 | 1004-1104 |
| D101-00 | SP1315 | 1004-1104 | D101-00 | SP1417 | 1004-1104 |
| D101-00 | SP1325 | 1004-1104 | D101-00 | SP1418 | 1004-1104 |
| D101-00 | SP1328 | 1004-1104 | D101-00 | SP1419 | 1004-1104 |
| D101-00 | SP1329 | 1004-1104 | D101-00 | SP1420 | 1004-1104 |
| D101-00 | SP1331 | 1004-1104 | D101-00 | SP1421 | 1004-1104 |

| PART NUMBER | CODE | EFF. | PART NUMBER | CODE | EFF. |
|---|---|---|---|---|---|
| D101-00 | SP1422 | 1004-1104 | D101-00 | SP1477 | 1004-1104 |
| D101-00 | SP1423 | 1004-1104 | D101-00 | SP1478 | 1004-1104 |
| D101-00 | SP1424 | 1004-1104 | D101-00 | SP1479 | 1004-1104 |
| D101-00 | SP1425 | 1004-1104 | D101-00 | SP1480 | 1004-1104 |
| D101-00 | SP1426 | 1004-1104 | D101-00 | SP1481 | 1004-1104 |
| D101-00 | SP1427 | 1004-1104 | D101-00 | SP1482 | 1004-1104 |
| D101-00 | SP1430 | 1004-1104 | D101-00 | SP1492 | 1004-1104 |
| D101-00 | SP1431 | 1004-1104 | D101-00 | SP1493 | 1004-1104 |
| D101-00 | SP1432 | 1004-1104 | D101-00 | SP1494 | 1004-1104 |
| D101-00 | SP1433 | 1004-1104 | D101-00 | SP1495 | 1004-1104 |
| D101-00 | SP1434 | 1004-1104 | D101-00 | SP1496 | 1004-1104 |
| D101-00 | SP1436 | 1004-1104 | D101-00 | SP1497 | 1004-1104 |
| D101-00 | SP1437 | 1004-1104 | D101-00 | SP1498 | 1004-1104 |
| D101-00 | SP1438 | 1004-1104 | D101-00 | SP1499 | 1004-1104 |
| D101-00 | SP1439 | 1004-1104 | D101-00 | SP1501 | 1004-1104 |
| D101-00 | SP1441 | 1004-1104 | D101-00 | SP1540 | 1004-1104 |
| D101-00 | SP1442 | 1004-1104 | D101-00 | SP1541 | 1004-1104 |
| D101-00 | SP1443 | 1004-1104 | D101-00 | SP1542 | 1004-1104 |
| D101-00 | SP1444 | 1004-1104 | D101-00 | SP1544 | 1004-1104 |
| D101-00 | SP1445 | 1004-1104 | D101-00 | SP1550 | 1004-1104 |
| D101-00 | SP1446 | 1004-1104 | D101-00 | SP1570 | 1004-1104 |
| D101-00 | SP1447 | 1004-1104 | D101-00 | SP1572 | 1004-1104 |
| D101-00 | SP1448 | 1004-1104 | D101-00 | SP1573 | 1004-1104 |
| D101-00 | SP1449 | 1004-1104 | D101-00 | SP1574 | 1004-1104 |
| D101-00 | SP1450 | 1004-1104 | D101-00 | SP1575 | 1004-1104 |
| D101-00 | SP1451 | 1004-1104 | D101-00 | SP1578 | 1004-1104 |
| D101-00 | SP1452 | 1004-1104 | D101-00 | SP1580 | 1004-1104 |
| D101-00 | SP1454 | 1004-1104 | D101-00 | SP1581 | 1004-1104 |
| D101-00 | SP1456 | 1004-1104 | D101-00 | SP1582 | 1004-1104 |
| D101-00 | SP1457 | 1004-1104 | D101-00 | SP1583 | 1004-1104 |
| D101-00 | SP1458 | 1004-1104 | D101-00 | SP1584 | 1004-1104 |
| D101-00 | SP1459 | 1004-1104 | D101-00 | SP1585 | 1004-1104 |
| D101-00 | SP1460 | 1004-1104 | D101-00 | SP1586 | 1004-1104 |
| D101-00 | SP1461 | 1004-1104 | D101-00 | SP1587 | 1004-1104 |
| D101-00 | SP1464 | 1004-1104 | D101-00 | SP1588 | 1004-1104 |
| D101-00 | SP1465 | 1004-1104 | D101-00 | SP1589 | 1004-1104 |
| D101-00 | SP1466 | 1004-1104 | D101-00 | SP1590 | 1004-1104 |
| D101-00 | SP1467 | 1004-1104 | D101-00 | SP1591 | 1004-1104 |
| D101-00 | SP1469 | 1004-1104 | D101-00 | SP1592 | 1004-1104 |
| D101-00 | SP1471 | 1004-1104 | D101-00 | SP1595 | 1004-1104 |
| D101-00 | SP1474 | 1004-1104 | D101-00 | SP1596 | 1004-1104 |

| PART NUMBER | CODE | EFF. | PART NUMBER | CODE | EFF. |
|---|---|---|---|---|---|
| D101-00 | SP1603 | 1004-1104 | D101-00 | SP20 | 1041-1104 |
| D101-00 | SP1604 | 1004-1104 | D101-00 | SP200 | 1046-1104 |
| D101-00 | SP1607 | 1004-1104 | D101-00 | SP201 | 1055-1104 |
| D101-00 | SP1611 | 1004-1104 | D101-00 | SP202 | 1055-1104 |
| D101-00 | SP1617 | 1004-1104 | D101-00 | SP203 | 1055-1104 |
| D101-00 | SP1618 | 1004-1104 | D101-00 | SP2036 | 1004-1104 |
| D101-00 | SP1619 | 1004-1104 | D101-00 | SP2037 | 1004-1104 |
| D101-00 | SP1620 | 1004-1104 | D101-00 | SP2038 | 1004-1104 |
| D101-00 | SP1623 | 1004-1104 | D101-00 | SP21 | 1041-1104 |
| D101-00 | SP1624 | 1004-1104 | D101-00 | SP2548 | 1004-1104 |
| D101-00 | SP1625 | 1004-1104 | D101-00 | SP2549 | 1004-1104 |
| D101-00 | SP1626 | 1004-1104 | D101-00 | SP2550 | 1004-1104 |
| D101-00 | SP1628 | 1004-1104 | D101-00 | SP2551 | 1004-1104 |
| D101-00 | SP1634 | 1004-1104 | D101-00 | SP2552 | 1004-1104 |
| D101-00 | SP1635 | 1004-1104 | D101-00 | SP2553 | 1004-1104 |
| D101-00 | SP1642 | 1004-1104 | D101-00 | SP2554 | 1004-1104 |
| D101-00 | SP1643 | 1004-1104 | D101-00 | SP2558 | 1004-1104 |
| D101-00 | SP1653 | 1004-1104 | D101-00 | SP2561 | 1004-1104 |
| D101-00 | SP1655 | 1004-1104 | D101-00 | SP2562 | 1004-1104 |
| D101-00 | SP1656 | 1004-1104 | D101-00 | SP2563 | 1004-1104 |
| D101-00 | SP1657 | 1004-1104 | D101-00 | SP2564 | 1004-1104 |
| D101-00 | SP1658 | 1004-1104 | D101-00 | SP2565 | 1004-1104 |
| D101-00 | SP1726 | 1004-1104 | D101-00 | SP2566 | 1004-1104 |
| D101-00 | SP1757 | 1004-1104 | D101-00 | SP2567 | 1004-1104 |
| D101-00 | SP1758 | 1004-1104 | D101-00 | SP2568 | 1004-1104 |
| D101-00 | SP1759 | 1004-1104 | D101-00 | SP2569 | 1004-1104 |
| D101-00 | SP1760 | 1004-1104 | D101-00 | SP2570 | 1004-1104 |
| D101-00 | SP1761 | 1004-1104 | D101-00 | SP2571 | 1004-1104 |
| D101-00 | SP1762 | 1004-1104 | D101-00 | SP2572 | 1004-1104 |
| D101-00 | SP1763 | 1004-1104 | D101-00 | SP2573 | 1004-1104 |
| D101-00 | SP1765 | 1004-1104 | D101-00 | SP2574 | 1004-1104 |
| D101-00 | SP1877 | 1004-1104 | D101-00 | SP2575 | 1004-1104 |
| D101-00 | SP1878 | 1004-1104 | D101-00 | SP2576 | 1049-1104 |
| D101-00 | SP1879 | 1004-1104 | D101-00 | SP2577 | 1049-1104 |
| D101-00 | SP1880 | 1004-1104 | D101-00 | SP2578 | 1049-1104 |
| D101-00 | SP1881 | 1004-1104 | D101-00 | SP2579 | 1049-1104 |
| D101-00 | SP1882 | 1004-1104 | D101-00 | SP2592 | 1034-1104 |
| D101-00 | SP196 | 1055-1104 | D101-00 | SP2593 | 1034-1104 |
| D101-00 | SP197 | 1055-1104 | D101-00 | SP2594 | 1034-1104 |
| D101-00 | SP198 | 1055-1104 | D101-00 | SP2595 | 1034-1104 |
| D101-00 | SP199 | 1055-1104 | D101-00 | SP2596 | 1034-1104 |

| PART NUMBER | CODE | EFF. | PART NUMBER | CODE | EFF. |
|---|---|---|---|---|---|
| D101-00 | SP2597 | 1034-1104 | D101-00 | SP2702 | 1004-1104 |
| D101-00 | SP2598 | 1034-1104 | D101-00 | SP2703 | 1004-1104 |
| D101-00 | SP2599 | 1034-1104 | D101-00 | SP2704 | 1004-1104 |
| D101-00 | SP2619 | 1004-1104 | D101-00 | SP2705 | 1004-1104 |
| D101-00 | SP2620 | 1004-1104 | D101-00 | SP2706 | 1004-1104 |
| D101-00 | SP2623 | 1004-1104 | D101-00 | SP2707 | 1004-1104 |
| D101-00 | SP2625 | 1004-1104 | D101-00 | SP2708 | 1004-1104 |
| D101-00 | SP2626 | 1004-1104 | D101-00 | SP2719 | 1004-1104 |
| D101-00 | SP2627 | 1004-1104 | D101-00 | SP2720 | 1004-1104 |
| D101-00 | SP2628 | 1004-1104 | D101-00 | SP2721 | 1004-1104 |
| D101-00 | SP2629 | 1004-1104 | D101-00 | SP2722 | 1004-1104 |
| D101-00 | SP2630 | 1004-1104 | D101-00 | SP2723 | 1004-1104 |
| D101-00 | SP2631 | 1004-1104 | D101-00 | SP2724 | 1004-1104 |
| D101-00 | SP2632 | 1004-1104 | D101-00 | SP2725 | 1004-1104 |
| D101-00 | SP2633 | 1004-1104 | D101-00 | SP2726 | 1004-1104 |
| D101-00 | SP2634 | 1004-1104 | D101-00 | SP2727 | 1004-1104 |
| D101-00 | SP2635 | 1004-1104 | D101-00 | SP2728 | 1004-1104 |
| D101-00 | SP2636 | 1004-1104 | D101-00 | SP2729 | 1004-1104 |
| D101-00 | SP2637 | 1004-1104 | D101-00 | SP2730 | 1004-1104 |
| D101-00 | SP2638 | 1004-1104 | D101-00 | SP2731 | 1004-1104 |
| D101-00 | SP2640 | 1004-1104 | D101-00 | SP2732 | 1004-1104 |
| D101-00 | SP2641 | 1004-1104 | D101-00 | SP2733 | 1004-1104 |
| D101-00 | SP2642 | 1004-1104 | D101-00 | SP2734 | 1004-1104 |
| D101-00 | SP2643 | 1004-1104 | D101-00 | SP2735 | 1004-1104 |
| D101-00 | SP2644 | 1004-1104 | D101-00 | SP2736 | 1004-1104 |
| D101-00 | SP2660 | 1004-1104 | D101-00 | SP2737 | 1004-1104 |
| D101-00 | SP2661 | 1004-1104 | D101-00 | SP2738 | 1004-1104 |
| D101-00 | SP2662 | 1004-1104 | D101-00 | SP2739 | 1004-1104 |
| D101-00 | SP2663 | 1004-1104 | D101-00 | SP2740 | 1004-1104 |
| D101-00 | SP2664 | 1004-1104 | D101-00 | SP2741 | 1004-1104 |
| D101-00 | SP2691 | 1004-1104 | D101-00 | SP2742 | 1004-1104 |
| D101-00 | SP2692 | 1004-1104 | D101-00 | SP2743 | 1004-1104 |
| D101-00 | SP2693 | 1004-1104 | D101-00 | SP2744 | 1004-1104 |
| D101-00 | SP2694 | 1004-1104 | D101-00 | SP2745 | 1004-1104 |
| D101-00 | SP2695 | 1004-1104 | D101-00 | SP2746 | 1004-1104 |
| D101-00 | SP2696 | 1004-1104 | D101-00 | SP2747 | 1004-1104 |
| D101-00 | SP2697 | 1004-1104 | D101-00 | SP2748 | 1004-1104 |
| D101-00 | SP2698 | 1004-1104 | D101-00 | SP2749 | 1004-1104 |
| D101-00 | SP2699 | 1004-1104 | D101-00 | SP2764 | 1004-1104 |
| D101-00 | SP2700 | 1004-1104 | D101-00 | SP2765 | 1004-1104 |
| D101-00 | SP2701 | 1004-1104 | D101-00 | SP2789 | 1004-1104 |

| PART NUMBER | CODE | EFF. | PART NUMBER | CODE | EFF. |
|---|---|---|---|---|---|
| D101-00 | SP2819 | 1004-1104 | D101-00 | SP639 | 1004-1104 |
| D101-00 | SP2820 | 1004-1104 | D101-00 | SP64 | 1004-1104 |
| D101-00 | SP2821 | 1004-1104 | D101-00 | SP640 | 1004-1104 |
| D101-00 | SP2822 | 1004-1104 | D101-00 | SP641 | 1004-1104 |
| D101-00 | SP2823 | 1004-1104 | D101-00 | SP642 | 1004-1104 |
| D101-00 | SP2824 | 1004-1104 | D101-00 | SP643 | 1004-1104 |
| D101-00 | SP2841 | 1004-1104 | D101-00 | SP644 | 1004-1104 |
| D101-00 | SP2842 | 1004-1104 | D101-00 | SP645 | 1004-1104 |
| D101-00 | SP2843 | 1004-1104 | D101-00 | SP646 | 1004-1104 |
| D101-00 | SP2844 | 1004-1104 | D101-00 | SP647 | 1004-1104 |
| D101-00 | SP2845 | 1004-1104 | D101-00 | SP648 | 1004-1104 |
| D101-00 | SP2846 | 1004-1104 | D101-00 | SP649 | 1004-1104 |
| D101-00 | SP2847 | 1004-1104 | D101-00 | SP650 | 1004-1104 |
| D101-00 | SP2848 | 1004-1104 | D101-00 | SP651 | 1004-1104 |
| D101-00 | SP602 | 1004-1104 | D101-00 | SP652 | 1004-1104 |
| D101-00 | SP603 | 1004-1104 | D101-00 | SP654 | 1004-1104 |
| D101-00 | SP604 | 1004-1104 | D101-00 | SP655 | 1004-1104 |
| D101-00 | SP605 | 1004-1104 | D101-00 | SP656 | 1004-1104 |
| D101-00 | SP606 | 1004-1104 | D101-00 | SP657 | 1004-1104 |
| D101-00 | SP608 | 1004-1104 | D101-00 | SP658 | 1004-1104 |
| D101-00 | SP609 | 1004-1104 | D101-00 | SP659 | 1004-1104 |
| D101-00 | SP610 | 1004-1104 | D101-00 | SP660 | 1004-1104 |
| D101-00 | SP612 | 1004-1104 | D101-00 | SP661 | 1004-1104 |
| D101-00 | SP613 | 1004-1104 | D101-00 | SP662 | 1004-1104 |
| D101-00 | SP614 | 1004-1104 | D101-00 | SP663 | 1004-1104 |
| D101-00 | SP615 | 1004-1104 | D101-00 | SP664 | 1004-1104 |
| D101-00 | SP617 | 1004-1104 | D101-00 | SP665 | 1004-1104 |
| D101-00 | SP618 | 1004-1104 | D101-00 | SP666 | 1004-1104 |
| D101-00 | SP619 | 1004-1104 | D101-00 | SP667 | 1004-1104 |
| D101-00 | SP620 | 1004-1104 | D101-00 | SP668 | 1004-1104 |
| D101-00 | SP621 | 1004-1104 | D101-00 | SP669 | 1004-1104 |
| D101-00 | SP622 | 1004-1104 | D101-00 | SP670 | 1004-1104 |
| D101-00 | SP623 | 1004-1104 | D101-00 | SP671 | 1004-1104 |
| D101-00 | SP624 | 1004-1104 | D101-00 | SP672 | 1004-1104 |
| D101-00 | SP625 | 1004-1104 | D101-00 | SP673 | 1004-1104 |
| D101-00 | SP626 | 1004-1104 | D101-00 | SP674 | 1004-1104 |
| D101-00 | SP627 | 1004-1104 | D101-00 | SP675 | 1004-1104 |
| D101-00 | SP628 | 1004-1104 | D101-00 | SP676 | 1004-1104 |
| D101-00 | SP629 | 1004-1104 | D101-00 | SP677 | 1004-1104 |
| D101-00 | SP634 | 1004-1104 | D101-00 | SP678 | 1004-1104 |
| D101-00 | SP635 | 1004-1104 | D101-00 | SP679 | 1004-1104 |

| PART NUMBER | CODE | EFF. | PART NUMBER | CODE | EFF. |
|---|---|---|---|---|---|
| D101-00 | SP680 | 1004-1104 | D101-00 | SP726 | 1004-1104 |
| D101-00 | SP681 | 1004-1104 | D101-00 | SP727 | 1004-1104 |
| D101-00 | SP682 | 1004-1104 | D101-00 | SP728 | 1004-1104 |
| D101-00 | SP683 | 1004-1104 | D101-00 | SP729 | 1004-1104 |
| D101-00 | SP684 | 1004-1104 | D101-00 | SP730 | 1004-1104 |
| D101-00 | SP685 | 1004-1104 | D101-00 | SP731 | 1004-1104 |
| D101-00 | SP687 | 1004-1104 | D101-00 | SP732 | 1004-1104 |
| D101-00 | SP688 | 1004-1104 | D101-00 | SP733 | 1004-1104 |
| D101-00 | SP689 | 1004-1104 | D101-00 | SP734 | 1004-1104 |
| D101-00 | SP690 | 1004-1104 | D101-00 | SP735 | 1004-1104 |
| D101-00 | SP695 | 1004-1104 | D101-00 | SP736 | 1004-1104 |
| D101-00 | SP696 | 1004-1104 | D101-00 | SP737 | 1004-1104 |
| D101-00 | SP697 | 1004-1104 | D101-00 | SP738 | 1004-1104 |
| D101-00 | SP698 | 1004-1104 | D101-00 | SP739 | 1004-1104 |
| D101-00 | SP699 | 1004-1104 | D101-00 | SP740 | 1004-1104 |
| D101-00 | SP700 | 1004-1104 | D101-00 | SP741 | 1004-1104 |
| D101-00 | SP701 | 1004-1104 | D101-00 | SP742 | 1004-1104 |
| D101-00 | SP702 | 1004-1104 | D101-00 | SP743 | 1004-1104 |
| D101-00 | SP703 | 1004-1104 | D101-00 | SP744 | 1004-1104 |
| D101-00 | SP704 | 1004-1104 | D101-00 | SP745 | 1004-1104 |
| D101-00 | SP705 | 1004-1104 | D101-00 | SP746 | 1004-1104 |
| D101-00 | SP706 | 1004-1104 | D101-00 | SP747 | 1004-1104 |
| D101-00 | SP707 | 1004-1104 | D101-00 | SP748 | 1004-1104 |
| D101-00 | SP708 | 1004-1104 | D101-00 | SP749 | 1004-1104 |
| D101-00 | SP709 | 1004-1104 | D101-00 | SP750 | 1004-1104 |
| D101-00 | SP710 | 1004-1104 | D101-00 | SP755 | 1004-1104 |
| D101-00 | SP711 | 1004-1104 | D101-00 | SP756 | 1004-1104 |
| D101-00 | SP712 | 1004-1104 | D101-00 | SP757 | 1004-1104 |
| D101-00 | SP713 | 1004-1104 | D101-00 | SP758 | 1004-1104 |
| D101-00 | SP714 | 1004-1104 | D101-00 | SP759 | 1004-1104 |
| D101-00 | SP715 | 1004-1104 | D101-00 | SP760 | 1004-1104 |
| D101-00 | SP716 | 1004-1104 | D101-00 | SP761 | 1004-1104 |
| D101-00 | SP717 | 1004-1104 | D101-00 | SP762 | 1004-1104 |
| D101-00 | SP718 | 1004-1104 | D101-00 | SP763 | 1004-1104 |
| D101-00 | SP719 | 1004-1104 | D101-00 | SP764 | 1004-1104 |
| D101-00 | SP720 | 1004-1104 | D101-00 | SP765 | 1004-1104 |
| D101-00 | SP721 | 1004-1104 | D101-00 | SP766 | 1004-1104 |
| D101-00 | SP722 | 1004-1104 | D101-00 | SP767 | 1004-1104 |
| D101-00 | SP723 | 1004-1104 | D101-00 | SP768 | 1004-1104 |
| D101-00 | SP724 | 1004-1104 | D101-00 | SP769 | 1004-1104 |
| D101-00 | SP725 | 1004-1104 | D101-00 | SP770 | 1004-1104 |

| PART NUMBER | CODE | EFF. | PART NUMBER | CODE | EFF. |
|---|---|---|---|---|---|
| D101-00 | SP771 | 1004-1104 | D101-00 | SP813 | 1004-1104 |
| D101-00 | SP772 | 1004-1104 | D101-00 | SP814 | 1004-1104 |
| D101-00 | SP773 | 1004-1104 | D101-00 | SP815 | 1004-1104 |
| D101-00 | SP774 | 1004-1104 | D101-00 | SP816 | 1004-1104 |
| D101-00 | SP775 | 1004-1104 | D101-00 | SP817 | 1004-1104 |
| D101-00 | SP776 | 1004-1104 | D101-00 | SP818 | 1004-1104 |
| D101-00 | SP777 | 1004-1104 | D101-00 | SP819 | 1004-1104 |
| D101-00 | SP778 | 1004-1104 | D101-00 | SP82 | 1004-1104 |
| D101-00 | SP779 | 1004-1104 | D101-00 | SP820 | 1004-1104 |
| D101-00 | SP780 | 1004-1104 | D101-00 | SP821 | 1004-1104 |
| D101-00 | SP781 | 1004-1104 | D101-00 | SP823 | 1004-1104 |
| D101-00 | SP782 | 1004-1104 | D101-00 | SP824 | 1004-1104 |
| D101-00 | SP783 | 1004-1104 | D101-00 | SP825 | 1004-1104 |
| D101-00 | SP784 | 1004-1104 | D101-00 | SP826 | 1004-1104 |
| D101-00 | SP785 | 1004-1104 | D101-00 | SP827 | 1004-1104 |
| D101-00 | SP786 | 1004-1104 | D101-00 | SP828 | 1004-1104 |
| D101-00 | SP787 | 1004-1104 | D101-00 | SP829 | 1004-1104 |
| D101-00 | SP788 | 1004-1104 | D101-00 | SP83 | 1004-1104 |
| D101-00 | SP789 | 1004-1104 | D101-00 | SP830 | 1004-1104 |
| D101-00 | SP790 | 1004-1104 | D101-00 | SP831 | 1004-1104 |
| D101-00 | SP791 | 1004-1104 | D101-00 | SP832 | 1004-1104 |
| D101-00 | SP792 | 1004-1104 | D101-00 | SP833 | 1004-1104 |
| D101-00 | SP793 | 1004-1104 | D101-00 | SP835 | 1004-1104 |
| D101-00 | SP794 | 1004-1104 | D101-00 | SP836 | 1004-1104 |
| D101-00 | SP795 | 1004-1104 | D101-00 | SP846 | 1004-1104 |
| D101-00 | SP796 | 1004-1104 | D101-00 | SP847 | 1004-1104 |
| D101-00 | SP797 | 1004-1104 | D101-00 | SP853 | 1004-1104 |
| D101-00 | SP798 | 1004-1104 | D101-00 | SP854 | 1004-1104 |
| D101-00 | SP799 | 1004-1104 | D101-00 | SP855 | 1004-1104 |
| D101-00 | SP800 | 1004-1104 | D101-00 | SP856 | 1004-1104 |
| D101-00 | SP801 | 1004-1104 | D101-00 | SP857 | 1004-1104 |
| D101-00 | SP802 | 1004-1104 | D101-00 | SP858 | 1004-1104 |
| D101-00 | SP803 | 1004-1104 | D101-00 | SP859 | 1004-1104 |
| D101-00 | SP805 | 1004-1104 | D101-00 | SP860 | 1004-1104 |
| D101-00 | SP806 | 1004-1104 | D101-00 | SP861 | 1004-1104 |
| D101-00 | SP807 | 1004-1104 | D101-00 | SP862 | 1004-1104 |
| D101-00 | SP808 | 1004-1104 | D101-00 | SP863 | 1004-1104 |
| D101-00 | SP809 | 1004-1104 | D101-00 | SP864 | 1004-1104 |
| D101-00 | SP810 | 1004-1104 | D101-00 | SP865 | 1004-1104 |
| D101-00 | SP811 | 1004-1104 | D101-00 | SP866 | 1004-1104 |
| D101-00 | SP812 | 1004-1104 | D101-00 | SP867 | 1004-1104 |

| PART NUMBER | CODE | EFF. | PART NUMBER | CODE | EFF. |
|---|---|---|---|---|---|
| D101-00 | SP868 | 1004-1104 | D101-00 | SP957 | 1004-1104 |
| D101-00 | SP872 | 1004-1104 | D101-00 | SP971 | 1004-1104 |
| D101-00 | SP873 | 1004-1104 | D101-00 | SP972 | 1004-1104 |
| D101-00 | SP874 | 1004-1104 | D101-00 | SP973 | 1004-1104 |
| D101-00 | SP875 | 1004-1104 | D101-00 | SP974 | 1004-1104 |
| D101-00 | SP876 | 1004-1104 | D101-00 | SP975 | 1004-1104 |
| D101-00 | SP877 | 1004-1104 | D101-00 | SP976 | 1004-1104 |
| D101-00 | SP879 | 1004-1104 | D101-00 | SP977 | 1004-1104 |
| D101-00 | SP880 | 1004-1104 | D101-00 | SP978 | 1004-1104 |
| D101-00 | SP881 | 1004-1104 | D101-00 | SP985 | 1004-1104 |
| D101-00 | SP882 | 1004-1104 | D101-00 | SP986 | 1004-1104 |
| D101-00 | SP883 | 1004-1104 | D101-00 | SP987 | 1004-1104 |
| D101-00 | SP884 | 1004-1104 | D101-00 | SP988 | 1004-1104 |
| D101-00 | SP885 | 1004-1104 | D101-00 | SP990 | 1004-1104 |
| D101-00 | SP886 | 1004-1104 | D101-00 | SP991 | 1004-1104 |
| D101-00 | SP887 | 1004-1104 | D101-00 | SP992 | 1004-1104 |
| D101-00 | SP888 | 1004-1104 | D101-00 | SP994 | 1004-1104 |
| D101-00 | SP889 | 1004-1104 | D101-00 | SP995 | 1004-1104 |
| D101-00 | SP89 | 1034-1104 | D101-00 | SP999 | 1004-1104 |
| D101-00 | SP890 | 1004-1104 | D412764 | BT1 | 1004-1104 |
| D101-00 | SP891 | 1004-1104 | D436-37 | SP2645 | 1004-1104 |
| D101-00 | SP892 | 1004-1104 | D436-37 | SP2646 | 1004-1104 |
| D101-00 | SP893 | 1004-1104 | D436-37 | SP2647 | 1004-1104 |
| D101-00 | SP894 | 1004-1104 | D436-37 | SP2648 | 1004-1104 |
| D101-00 | SP895 | 1004-1104 | D436-37 | SP2649 | 1004-1104 |
| D101-00 | SP896 | 1004-1104 | D436-37 | SP2655 | 1004-1104 |
| D101-00 | SP897 | 1004-1104 | D436-37 | SP2656 | 1004-1104 |
| D101-00 | SP898 | 1004-1104 | D436-37 | SP2657 | 1004-1104 |
| D101-00 | SP899 | 1004-1104 | D436-37 | SP2658 | 1004-1104 |
| D101-00 | SP90 | 1034-1104 | D436-37 | SP2659 | 1004-1104 |
| D101-00 | SP900 | 1004-1104 | D436-37 | SP2665 | 1004-1104 |
| D101-00 | SP901 | 1004-1104 | D436-37 | SP2666 | 1004-1104 |
| D101-00 | SP944 | 1004-1104 | D436-37 | SP2667 | 1004-1104 |
| D101-00 | SP945 | 1004-1104 | DA55-95-7-1 | MT37 | 1004-1104 |
| D101-00 | SP946 | 1004-1104 | DA55-95-7-1 | MT38 | 1004-1104 |
| D101-00 | SP947 | 1004-1104 | DAC01 | AE664 | 1004-1104 |
| D101-00 | SP948 | 1004-1104 | DMH21-1 | AE621 | 1004-1104 |
| D101-00 | SP952 | 1004-1104 | DMH24-1 | AE622 | 1004-1104 |
| D101-00 | SP953 | 1004-1104 | DMN27-3 | E610 | 1004-1104 |
| D101-00 | SP954 | 1004-1104 | DMN4-17 | E609 | 1004-1104 |
| D101-00 | SP955 | 1004-1104 | DMNI70-2 | E603 | 1004-1104 |

| PART NUMBER | CODE | EFF. | PART NUMBER | CODE | EFF. |
|---|---|---|---|---|---|
| DMNI70-2 | E604 | 1004-1104 | HBO125 | F21 | 1044-1104 |
| DMNI70-2 | E605 | 1004-1104 | HYLZ 50310 | E86 | 1002-1002 |
| DMNI70-2 | E620 | 1004-1104 | HYLZ 50310 | E86 | 1004-1104 |
| DMNI70-2 | E653 | 1004-1104 | HYLZ 50310 | E87 | 1002-1002 |
| DS2004MJ | IC609 | 1004-1104 | HYLZ 50310 | E87 | 1004-1104 |
| E11-54X5783-6 | LS1800 | 1004-1104 | HYLZ 50310 | E88 | 1002-1002 |
| E11-54X5783-6 | LS1801 | 1004-1104 | HYLZ 50310 | E88 | 1004-1104 |
| E11-54X5783-6 | LS1802 | 1004-1104 | JBS 13001-1 | B33 | 1058-1104 |
| E11-54X5783-6 | LS600 | 1004-1104 | JBS 5001-1 | MC1 | 1004-1104 |
| E11-54X5783-6 | LS601 | 1004-1104 | L213796 | E90 | 1004-1104 |
| ECEA1JU100 | C15 | 1004-1104 | LM340T15 | IC1 | 1004-1104 |
| ECEA1JU100 | C9 | 1004-1104 | LM555C | IC2 | 1004-1104 |
| ECEA1VU101 | C11 | 1004-1104 | LM555C | IC4 | 1004-1104 |
| ECEA1VU101 | C12 | 1004-1104 | LT55A | E100 | 1006-1104 |
| ECEA1VU101 | C6 | 1004-1104 | LT55A | E36 | 1004-1104 |
| ECEA1VU221 | C17 | 1004-1104 | LT-71A | E112 | 1004-1104 |
| ECEA1VU221 | C5 | 1004-1104 | M1035JHMBHVV7 | AE619 | 1004-1065 |
| EM4011-1 | B12 | 1004-1104 | M1035JHMBHVV7 | AE620 | 1004-1065 |
| EM4032-1 | B14 | 1004-1017 | M24236/1-0880 | S142 | 1091-1104 |
| EM4032-1 | B15 | 1004-1017 | M24236/1-0880 | S143 | 1091-1104 |
| EM4032-2 | B14 | 1018-1104 | M24236/1-0880 | S145 | 1091-1104 |
| EM4032-2 | B15 | 1018-1104 | M24236/1-0886 | S138 | 1091-1104 |
| EM484-3 | L13 | 1004-1104 | M24236/1-0886 | S139 | 1091-1104 |
| EM484-3 | L18 | 1004-1104 | M24236/1-0886 | S23 | 1091-1104 |
| EM484-3 | L19 | 1004-1104 | M24236/1-886 | S26 | 1091-1104 |
| EM675-1 | B9 | 1004-1104 | M300-B4NER | K1600 | 1039-1104 |
| EM8028-1 | MT41 | 1004-1104 | M300-J2NER | K82 | 1058-1104 |
| EM8028-1 | MT42 | 1004-1104 | M320J2N | K19 | 1004-1104 |
| EM8028-1 | MT45 | 1004-1104 | M320J2N | K20 | 1004-1104 |
| EM8028-1 | MT46 | 1004-1104 | M320J2N | K600 | 1004-1104 |
| EM9005-2 | L3 | 1082-1082 | M320J2N | K81 | 1004-1104 |
| EM9005-2 | L32 | 1004-1022 | M39016/22-007 | K650 | 1004-1104 |
| EM9005-2 | L33 | 1004-1022 | M39016/6-209 | K30 | 1004-1104 |
| EM9005-2 | L4 | 1082-1082 | M39016-22-007 | K1601 | 1004-1104 |
| FE182-000 | B11 | 1004-1104 | M39016-22-007 | K38 | 1004-1104 |
| FE187-001 | B10 | 1004-1104 | M39016-22-007 | K53 | 1004-1104 |
| GB300NA205 | S144 | 1004-1104 | M39016-22-007 | K54 | 1004-1104 |
| GB300NA210 | S71 | 1004-1104 | M39016-22-007 | K602 | 1004-1104 |
| GB3540-00 | TB46 | 1026-1104 | M39016-22-007 | K621 | 1004-1104 |
| HBO 125 | F19 | 1004-1104 | M39016-22-007 | K623 | 1004-1104 |
| HBO 150 | F26 | 1004-1104 | M39016-22-007 | K630 | 1004-1104 |

| PART NUMBER | CODE | EFF. |
|---|---|---|
| M39016-22-007 | K634 | 1004-1104 |
| M39016-22-007 | K635 | 1004-1104 |
| M39016-22-007 | K647 | 1004-1104 |
| M39016-22-007 | K648 | 1004-1104 |
| M39016-22-007 | K649 | 1004-1104 |
| M39016-22-007 | K651 | 1004-1104 |
| M39016-22-007 | K85 | 1004-1015 |
| M39016-22-007 | K89 | 1004-1104 |
| M39016-22-009 | K42 | 1004-1104 |
| M39016-22-009 | K633 | 1004-1104 |
| M39016-22-009 | K64 | 1004-1104 |
| M39016-22-009 | K65 | 1004-1104 |
| M39016-22-009 | K79 | 1004-1104 |
| M39016-22-009 | K80 | 1004-1104 |
| M39016-22-009 | K83 | 1004-1104 |
| M39016-22-009 | K84 | 1004-1104 |
| M39016-22-009 | K85 | 1016-1104 |
| M39016-22-009 | K90 | 1004-1104 |
| M39016-22-009 | K92 | 1004-1104 |
| M39016-22-009 | K93 | 1004-1104 |
| M39016-22-009 | K94 | 1004-1104 |
| M39016-22-009 | K97 | 1004-1104 |
| M39016-22-009 | K98 | 1004-1104 |
| M39016-6-209 | K78 | 1004-1104 |
| M39029-1-101 | K103 | 1004-1104 |
| M39029-1-101 | K104 | 1004-1104 |
| M39029-1-101 | K105 | 1004-1104 |
| M39029-1-101 | K23 | 1004-1104 |
| M39029-1-101 | K24 | 1004-1104 |
| M39029-1-101 | K25 | 1004-1104 |
| M39029-1-101 | K26 | 1004-1104 |
| M39029-1-101 | K31 | 1004-1104 |
| M39029-1-101 | K57 | 1004-1104 |
| M39029-1-101 | K58 | 1004-1104 |
| M39029-1-101 | K86 | 1004-1104 |
| M39029-1-101 | K87 | 1004-1104 |
| M39029-1-101 | K88 | 1004-1104 |
| M500J2N003 | K18 | 1004-1104 |
| M500-J2N003 | K1600 | 1004-1038 |
| M500-J2NER | K47 | 1058-1104 |
| M500-J2NER | K48 | 1058-1104 |
| M520J5N | K106 | 1041-1104 |
| M520J5N | K34 | 1004-1104 |
| M520J5N | K35 | 1004-1104 |
| M520J5N | K39 | 1010-1104 |
| M520J5N | K59 | 1004-1104 |
| M520J5N | K60 | 1004-1104 |
| M520J5N | K61 | 1004-1104 |
| M520J5N | K62 | 1004-1104 |
| M520J5N | K75 | 1004-1104 |
| M520J5N | K76 | 1004-1104 |
| M520J5N | K77 | 1004-1104 |
| M5757-23-031 | K10 | 1004-1104 |
| M5757-23-031 | K11 | 1004-1104 |
| M5757-23-031 | K47 | 1004-1057 |
| M5757-23-031 | K48 | 1004-1057 |
| M5757-23-031 | K55 | 1004-1104 |
| M5757-23-031 | K56 | 1004-1104 |
| M5757-23-031 | K640 | 1004-1104 |
| M5757-23-031 | K82 | 1004-1057 |
| M5757-23-031 | K96 | 1026-1104 |
| M7928/5-3 | SP106 | 1004-1104 |
| M7928/5-3 | SP108 | 1004-1104 |
| M7928/5-3 | SP109 | 1004-1104 |
| M7928/5-3 | SP110 | 1004-1104 |
| M7928/5-3 | SP111 | 1004-1104 |
| M7928/5-3 | SP112 | 1004-1104 |
| M7928/5-3 | SP121 | 1004-1104 |
| M7928/5-3 | SP122 | 1004-1104 |
| M7928/5-3 | SP1316 | 1004-1104 |
| M7928/5-3 | SP1317 | 1004-1104 |
| M7928/5-3 | SP1318 | 1004-1104 |
| M7928/5-3 | SP1319 | 1004-1104 |
| M7928/5-3 | SP1409 | 1004-1104 |
| M7928/5-3 | SP1410 | 1004-1104 |
| M7928/5-3 | SP1411 | 1004-1104 |
| M7928/5-3 | SP1440 | 1004-1104 |
| M7928/5-3 | SP180 | 1004-1104 |
| M7928/5-3 | SP181 | 1004-1104 |
| M7928/5-3 | SP1909 | 1004-1104 |
| M7928/5-3 | SP1910 | 1004-1104 |
| M7928/5-3 | SP193 | 1046-1104 |

| PART NUMBER | CODE | EFF. | PART NUMBER | CODE | EFF. |
|---|---|---|---|---|---|
| M7928/5-3 | SP194 | 1046-1104 | MK4BR | S88 | 1004-1104 |
| M7928/5-3 | SP1955 | 1034-1104 | MK4BR | S91 | 1004-1104 |
| M7928/5-3 | SP1956 | 1034-1104 | MS14105-25 | CB10 | 1004-1104 |
| M7928/5-3 | SP1962 | 1004-1104 | MS14105-25 | CB154 | 1010-1104 |
| M7928/5-3 | SP2004 | 1058-1104 | MS14105-25 | CB168 | 1055-1104 |
| M7928/5-3 | SP24 | 1004-1104 | MS14105-25 | CB9 | 1004-1104 |
| M7928/5-3 | SP25 | 1004-1104 | MS14105-35 | CB11 | 1004-1104 |
| M7928/5-3 | SP28 | 1004-1104 | MS14105-35 | CB12 | 1004-1104 |
| M7928/5-3 | SP29 | 1004-1104 | MS14105-35 | CB13 | 1004-1104 |
| M7928/5-3 | SP75 | 1004-1104 | MS14105-35 | CB14 | 1004-1104 |
| M7928/5-3 | SP84 | 1004-1104 | MS14105-35 | CB142 | 1004-1104 |
| M7928/5-4 | SP105 | 1004-1104 | MS14105-35 | CB15 | 1004-1104 |
| M7928/5-4 | SP107 | 1004-1104 | MS24141D2 | K5 | 1004-1104 |
| M7928/5-4 | SP116 | 1004-1104 | MS24515-718 | DS602 | 1004-1104 |
| M7928/5-4 | SP117 | 1004-1104 | MS24523-22 | S112 | 1057-1057 |
| M7928/5-4 | SP1300 | 1004-1124 | MS24523-22 | S13 | 1004-1104 |
| M7928/5-4 | SP1301 | 1004-1124 | MS24523-22 | S14 | 1004-1104 |
| M7928/5-4 | SP1303 | 1004-1124 | MS24523-22 | S140 | 1004-1104 |
| M7928/5-4 | SP1304 | 1004-1124 | MS24523-22 | S15 | 1004-1104 |
| M7928/5-4 | SP1690 | 1004-1104 | MS24523-22 | S178 | 1004-1104 |
| M7928/5-4 | SP1691 | 1004-1104 | MS24523-22 | S21 | 1004-1104 |
| M7928/5-4 | SP189 | 1041-1104 | MS24523-22 | S22 | 1004-1104 |
| M7928/5-4 | SP191 | 1046-1104 | MS24523-22 | S49 | 1004-1104 |
| M7928/5-4 | SP1933 | 1004-1104 | MS24523-23 | S162 | 1004-1104 |
| M7928/5-4 | SP1935 | 1004-1104 | MS24523-23 | S163 | 1004-1104 |
| M7928/5-4 | SP1936 | 1004-1104 | MS24523-23 | S174 | 1004-1104 |
| M7928/5-4 | SP1948 | 1004-1104 | MS24523-23 | S181 | 1058-1104 |
| M7928/5-4 | SP195 | 1058-1104 | MS24523-23 | S182 | 1058-1104 |
| M7928/5-4 | SP4 | 1004-1104 | MS24523-23 | S52 | 1004-1104 |
| M7928/5-4 | SP6 | 1004-1104 | MS24523-23 | S53 | 1004-1104 |
| M7928/5-4 | SP87 | 1004-1104 | MS24523-27 | S25 | 1004-1104 |
| M7928/5-4 | SP88 | 1004-1104 | MS24524-21 | S32 | 1004-1104 |
| M7928/5-4 | SP951 | 1004-1104 | MS24524-22 | S1 | 1004-1104 |
| M7928/5-5 | SP1287 | 1004-1104 | MS24524-22 | S30 | 1004-1104 |
| M7928/5-5 | SP1288 | 1004-1104 | MS24524-22 | S31 | 1004-1104 |
| M7928/5-5 | SP204 | 1055-1104 | MS24524-22 | S33 | 1004-1104 |
| M7928/5-5 | SP205 | 1044-1104 | MS24524-22 | S34 | 1004-1104 |
| M877 | M601 | 1004-1104 | MS24524-23 | S10 | 1004-1104 |
| M877 | M604 | 1004-1104 | MS24524-23 | S35 | 1004-1104 |
| MD41-1108(5V) | AE773 | 1004-1104 | MS24524-23 | S36 | 1004-1104 |
| MK4BR | S164 | 1004-1104 | MS24524-23 | S48 | 1082-1082 |

| PART NUMBER | CODE | EFF. |
|---|---|---|
| MS24524-23 | S9 | 1004-1104 |
| MS24524-27 | S38 | 1004-1104 |
| MS24524-31 | S5 | 1004-1104 |
| MS24524-31 | S6 | 1004-1104 |
| MS24525-23 | S24 | 1004-1104 |
| MS24525-31 | S160 | 1004-1104 |
| MS24658-23D | S161 | 1004-1104 |
| MS24658-23D | S18 | 1004-1104 |
| MS24658-23D | S19 | 1004-1104 |
| MS24658-23D | S46 | 1004-1104 |
| MS24658-23D | S47 | 1004-1104 |
| MS24658-23D | S77 | 1004-1104 |
| MS24659-23D | S74 | 1004-1104 |
| MS25224-1 | S53 | 1004-1104 |
| MS25231-313 | DS27 | 1004-1104 |
| MS25231-313 | DS28 | 1004-1104 |
| MS25231-313 | DS29 | 1004-1104 |
| MS25231-313 | DS30 | 1004-1104 |
| MS25231-313 | DS31 | 1004-1104 |
| MS25231-313 | DS32 | 1004-1104 |
| MS25231-313 | DS33 | 1004-1104 |
| MS25231-313 | DS34 | 1004-1104 |
| MS25235-3011 | DS6 | 1004-1104 |
| MS25338-7079 | DS7 | 1004-1104 |
| MS26574-1/2 | CB100 | 1004-1104 |
| MS26574-1/2 | CB107 | 1004-1104 |
| MS26574-1/2 | CB128 | 1004-1104 |
| MS26574-1/2 | CB129 | 1004-1104 |
| MS26574-1/2 | CB130 | 1004-1104 |
| MS26574-1/2 | CB131 | 1004-1104 |
| MS26574-1/2 | CB165 | 1004-1104 |
| MS26574-1/2 | CB166 | 1004-1104 |
| MS26574-1/2 | CB167 | 1004-1104 |
| MS26574-1/2 | CB22 | 1004-1104 |
| MS26574-1/2 | CB23 | 1004-1104 |
| MS26574-1/2 | CB5 | 1034-1104 |
| MS26574-1/2 | CB57 | 1004-1104 |
| MS26574-1/2 | CB58 | 1004-1104 |
| MS26574-1/2 | CB6 | 1034-1104 |
| MS27212-1-12 | TB3 | 1004-1104 |
| MS27212-1-3 | TB42 | 1004-1104 |
| MS27212-1-3 | TB45 | 1004-1104 |
| MS27212-1-4 | TB36 | 1004-1104 |
| MS27212-1-4 | TB37 | 1004-1104 |
| MS27212-1-4 | TB40 | 1004-1104 |
| MS27212-1-4 | TB41 | 1004-1104 |
| MS27212-1-4 | TB600 | 1004-1104 |
| MS27212-1-6 | TB1601 | 1004-1104 |
| MS27212-1-6 | TB1602 | 1004-1104 |
| MS27212-1-6 | TB24 | 1004-1104 |
| MS27212-1-6 | TB34 | 1004-1104 |
| MS27212-1-6 | TB35 | 1004-1104 |
| MS27212-1-7 | TB38 | 1004-1104 |
| MS27212-1-7 | TB39 | 1004-1104 |
| MS27212-1-8 | TB25 | 1004-1104 |
| MS27212-2-3 | MT8 | 1032-1104 |
| MS27212-2-3 | MT9 | 1032-1104 |
| MS27212-6-5 | TB10 | 1004-1104 |
| MS27212-6-8 | TB7 | 1004-1104 |
| MS27406-1 | S16 | 1004-1104 |
| MS27406-1 | S17 | 1004-1104 |
| MS27406-1 | S180 | 1058-1104 |
| MS27406-1 | S4 | 1004-1104 |
| MS27407-4 | S11 | 1004-1104 |
| MS27407-4 | S12 | 1004-1104 |
| MS27407-4 | S27 | 1004-1104 |
| MS27407-4 | S28 | 1004-1104 |
| MS27407-4 | S37 | 1004-1104 |
| MS27407-4 | S40 | 1004-1104 |
| MS27407-4 | S41 | 1004-1104 |
| MS27408-4A | S7 | 1004-1104 |
| MS28034-3 | MT10 | 1004-1104 |
| MS28034-3 | MT11 | 1004-1104 |
| MS28042-1A | M11 | 1004-1104 |
| MS28042-1A | M12 | 1004-1104 |
| MS28042-1A | M13 | 1004-1104 |
| MS28042-1A | M14 | 1004-1104 |
| MS28042-1A | M15 | 1004-1104 |
| MS28042-1A | M16 | 1004-1104 |
| MS28042-1A | M17 | 1004-1104 |
| MS28042-1A | M18 | 1004-1104 |
| MS28042-1A | M5 | 1004-1104 |

| PART NUMBER | CODE | EFF. | PART NUMBER | CODE | EFF. |
|---|---|---|---|---|---|
| MS28042-1A | M6 | 1004-1104 | MS3320-3 | CB133 | 1004-1104 |
| MS3320-1 | CB155 | 1004-1104 | MS3320-3 | CB134 | 1004-1104 |
| MS3320-1 | CB157 | 1004-1104 | MS3320-3 | CB135 | 1004-1104 |
| MS3320-1 | CB1605 | 1004-1104 | MS3320-3 | CB136 | 1004-1104 |
| MS3320-1 | CB1610 | 1004-1104 | MS3320-3 | CB137 | 1004-1104 |
| MS3320-10 | CB143 | 1004-1104 | MS3320-3 | CB139 | 1004-1104 |
| MS3320-10 | CB146 | 1004-1104 | MS3320-3 | CB144 | 1004-1104 |
| MS3320-10 | CB147 | 1004-1104 | MS3320-3 | CB145 | 1004-1104 |
| MS3320-10 | CB152 | 1004-1104 | MS3320-3 | CB148 | 1004-1104 |
| MS3320-10 | CB1607 | 1004-1104 | MS3320-3 | CB150 | 1004-1104 |
| MS3320-10 | CB1609 | 1004-1033 | MS3320-3 | CB153 | 1004-1104 |
| MS3320-10 | CB1611 | 1004-1104 | MS3320-3 | CB158 | 1004-1104 |
| MS3320-10 | CB40 | 1054-1104 | MS3320-3 | CB1601 | 1004-1104 |
| MS3320-10 | CB41 | 1054-1104 | MS3320-3 | CB1602 | 1004-1104 |
| MS3320-10 | CB42 | 1054-1104 | MS3320-3 | CB2 | 1004-1104 |
| MS3320-10 | CB43 | 1054-1104 | MS3320-3 | CB24 | 1004-1104 |
| MS3320-10 | CB74 | 1004-1104 | MS3320-3 | CB25 | 1004-1104 |
| MS3320-10 | CB75 | 1004-1104 | MS3320-3 | CB3 | 1004-1104 |
| MS3320-10 | CB95 | 1004-1104 | MS3320-3 | CB33 | 1004-1104 |
| MS3320-15 | CB120 | 1004-1104 | MS3320-3 | CB35 | 1004-1104 |
| MS3320-15 | CB140 | 1004-1104 | MS3320-3 | CB36 | 1004-1104 |
| MS3320-15 | CB141 | 1004-1104 | MS3320-3 | CB37 | 1004-1104 |
| MS3320-15 | CB1604 | 1004-1034 | MS3320-3 | CB38 | 1004-1104 |
| MS3320-15 | CB1606 | 1004-1033 | MS3320-3 | CB39 | 1004-1104 |
| MS3320-15 | CB29 | 1004-1104 | MS3320-3 | CB4 | 1004-1104 |
| MS3320-20 | CB138 | 1004-1104 | MS3320-3 | CB44 | 1004-1104 |
| MS3320-20 | CB156 | 1004-1104 | MS3320-3 | CB45 | 1004-1104 |
| MS3320-20 | CB30 | 1004-1104 | MS3320-3 | CB46 | 1004-1104 |
| MS3320-20 | CB631 | 1004-1104 | MS3320-3 | CB47 | 1004-1104 |
| MS3320-3 | CB1 | 1004-1104 | MS3320-3 | CB48 | 1004-1104 |
| MS3320-3 | CB101 | 1004-1104 | MS3320-3 | CB49 | 1057-1057 |
| MS3320-3 | CB102 | 1004-1104 | MS3320-3 | CB52 | 1004-1104 |
| MS3320-3 | CB103 | 1004-1104 | MS3320-3 | CB59 | 1004-1104 |
| MS3320-3 | CB104 | 1004-1104 | MS3320-3 | CB601 | 1004-1104 |
| MS3320-3 | CB105 | 1004-1104 | MS3320-3 | CB603 | 1004-1104 |
| MS3320-3 | CB111 | 1004-1104 | MS3320-3 | CB604 | 1004-1104 |
| MS3320-3 | CB113 | 1004-1104 | MS3320-3 | CB605 | 1004-1104 |
| MS3320-3 | CB114 | 1004-1104 | MS3320-3 | CB607 | 1004-1104 |
| MS3320-3 | CB117 | 1004-1104 | MS3320-3 | CB608 | 1004-1104 |
| MS3320-3 | CB118 | 1004-1104 | MS3320-3 | CB61 | 1004-1104 |
| MS3320-3 | CB119 | 1004-1104 | MS3320-3 | CB610 | 1004-1104 |

| PART NUMBER | CODE | EFF. | PART NUMBER | CODE | EFF. |
|---|---|---|---|---|---|
| MS3320-3 | CB611 | 1004-1104 | MS3320-3 | CB83 | 1004-1104 |
| MS3320-3 | CB612 | 1004-1004 | MS3320-3 | CB84 | 1004-1104 |
| MS3320-3 | CB614 | 1004-1104 | MS3320-3 | CB87 | 1004-1104 |
| MS3320-3 | CB617 | 1004-1104 | MS3320-3 | CB88 | 1004-1104 |
| MS3320-3 | CB62 | 1004-1104 | MS3320-3 | CB90 | 1004-1104 |
| MS3320-3 | CB620 | 1004-1104 | MS3320-3 | CB91 | 1004-1104 |
| MS3320-3 | CB622 | 1004-1104 | MS3320-3 | CB92 | 1004-1104 |
| MS3320-3 | CB63 | 1004-1104 | MS3320-3 | CB93 | 1004-1104 |
| MS3320-3 | CB632 | 1004-1104 | MS3320-3 | CB96 | 1004-1104 |
| MS3320-3 | CB636 | 1004-1104 | MS3320-3 | CB97 | 1004-1104 |
| MS3320-3 | CB637 | 1004-1104 | MS3320-3 | CB98 | 1004-1104 |
| MS3320-3 | CB638 | 1004-1104 | MS3320-3 | CB99 | 1004-1104 |
| MS3320-3 | CB64 | 1004-1104 | MS3320-5 | CB108 | 1004-1104 |
| MS3320-3 | CB645 | 1004-1104 | MS3320-5 | CB109 | 1004-1104 |
| MS3320-3 | CB65 | 1004-1104 | MS3320-5 | CB110 | 1004-1104 |
| MS3320-3 | CB655 | 1004-1104 | MS3320-5 | CB115 | 1004-1104 |
| MS3320-3 | CB657 | 1004-1104 | MS3320-5 | CB121 | 1004-1104 |
| MS3320-3 | CB658 | 1004-1104 | MS3320-5 | CB127 | 1004-1104 |
| MS3320-3 | CB659 | 1004-1104 | MS3320-5 | CB1603 | 1004-1104 |
| MS3320-3 | CB66 | 1004-1104 | MS3320-5 | CB1604 | 1035-1104 |
| MS3320-3 | CB662 | 1058-1104 | MS3320-5 | CB169 | 1004-1104 |
| MS3320-3 | CB664 | 1004-1104 | MS3320-5 | CB18 | 1004-1104 |
| MS3320-3 | CB665 | 1004-1104 | MS3320-5 | CB19 | 1004-1104 |
| MS3320-3 | CB667 | 1004-1104 | MS3320-5 | CB20 | 1004-1104 |
| MS3320-3 | CB67 | 1004-1104 | MS3320-5 | CB21 | 1004-1104 |
| MS3320-3 | CB674 | 1004-1104 | MS3320-5 | CB32 | 1004-1104 |
| MS3320-3 | CB675 | 1004-1104 | MS3320-5 | CB34 | 1004-1104 |
| MS3320-3 | CB68 | 1004-1104 | MS3320-5 | CB49 | 1058-1104 |
| MS3320-3 | CB70 | 1004-1104 | MS3320-5 | CB618 | 1004-1104 |
| MS3320-3 | CB708 | 1004-1104 | MS3320-5 | CB633 | 1004-1104 |
| MS3320-3 | CB71 | 1004-1104 | MS3320-5 | CB639 | 1004-1104 |
| MS3320-3 | CB711 | 1004-1104 | MS3320-5 | CB640 | 1004-1104 |
| MS3320-3 | CB713 | 1004-1104 | MS3320-5 | CB642 | 1004-1104 |
| MS3320-3 | CB715 | 1004-1104 | MS3320-5 | CB647 | 1004-1104 |
| MS3320-3 | CB72 | 1004-1104 | MS3320-5 | CB649 | 1004-1104 |
| MS3320-3 | CB73 | 1004-1104 | MS3320-5 | CB651 | 1004-1104 |
| MS3320-3 | CB76 | 1004-1104 | MS3320-5 | CB661 | 1004-1104 |
| MS3320-3 | CB78 | 1004-1104 | MS3320-5 | CB662 | 1006-1057 |
| MS3320-3 | CB8 | 1004-1104 | MS3320-5 | CB669 | 1004-1104 |
| MS3320-3 | CB80 | 1004-1104 | MS3320-5 | CB676 | 1058-1104 |
| MS3320-3 | CB81 | 1082-1082 | MS3320-5 | CB714 | 1004-1104 |

| PART NUMBER | CODE | EFF. | PART NUMBER | CODE | EFF. |
|---|---|---|---|---|---|
| MS3320-5 | CB77 | 1004-1104 | MS35489-4 | FT608 | 1004-1104 |
| MS3320-5 | CB79 | 1004-1104 | NP165231-01 | HR13 | 1004-1022 |
| MS3320-5 | CB89 | 1004-1104 | NP165231-02 | HR14 | 1004-1022 |
| MS3320-7-1/2 | CB1606 | 1034-1104 | NP165251-01 | HR13 | 1023-1104 |
| MS3320-7-1/2 | CB1609 | 1034-1104 | NP165251-02 | HR14 | 1023-1104 |
| MS3320-7-1/2 | CB40 | 1004-1053 | NTX138-000 | TR613 | 1004-1104 |
| MS3320-7-1/2 | CB41 | 1004-1053 | P/O 210962 | L14 | 1004-1104 |
| MS3320-7-1/2 | CB42 | 1004-1053 | P/O 210962 | L15 | 1004-1104 |
| MS3320-7-1/2 | CB43 | 1004-1053 | P/O 80-115467-4 | S56 | 1019-1104 |
| MS3320-7-1/2 | CB602 | 1004-1104 | P/O 80-115467-4 | S57 | 1019-1104 |
| MS3320-7-1/2 | CB619 | 1004-1104 | P/O 80-115467-4 | S58 | 1019-1104 |
| MS3320-7-1/2 | CB642 | 1038-1104 | P/O 80-115467-4 | S59 | 1019-1104 |
| MS3320-7-1/2 | CB643 | 1004-1104 | P/O 80-115467-4 | S601 | 1019-1104 |
| MS3320-7-1/2 | CB653 | 1004-1104 | P/O 80-115467-4 | S602 | 1019-1104 |
| MS3320-7-1/2 | CB7 | 1004-1104 | P/O 80-115467-4 | S605 | 1019-1104 |
| MS3320-7-1/2 | CB85 | 1004-1104 | P/O 80-115467-4 | S606 | 1019-1104 |
| MS3338-6839 | DS41 | 1004-1104 | P/O 80-115467-4 | S635 | 1019-1104 |
| MS3338-6839 | DS42 | 1004-1104 | P/O 80-115467-4 | S76 | 1019-1104 |
| MS3338-6839 | DS600 | 1004-1104 | P/O 817-11900-003 | AE768 | 1004-1104 |
| MS3338-6839 | DS603 | 1004-1104 | P/O 817-18000-002 | AE774 | 1004-1104 |
| MS3338-6839 | DS604 | 1004-1104 | P/O BATTERY | RT3 | 1004-1104 |
| MS3338-6839 | DS607 | 1004-1104 | P/O ENG STD EQU | E15 | 1004-1104 |
| MS3338-6839 | DS611 | 1004-1104 | P/O ENG STD EQU | E16 | 1004-1104 |
| MS3338-6839 | DS613 | 1004-1104 | P/O ENGINE | L23 | 1004-1104 |
| MS3338-6839 | DS65 | 1004-1104 | P/O ENGINE | L24 | 1004-1104 |
| MS3338-6839 | DS69 | 1004-1104 | P/O ENGINE | L25 | 1004-1104 |
| MS3338-6839 | DS71 | 1004-1104 | P/O ENGINE | L26 | 1004-1104 |
| MS3338-6839 | DS74 | 1004-1104 | P/O ENGINE | S110 | 1004-1104 |
| MS3338-6839 | DS77 | 1004-1104 | P/O ENGINE | S111 | 1004-1104 |
| MS3338-6839 | S119 | 1004-1104 | P/O ENGINE | S197 | 1073-1104 |
| MS3338-6839 | S120 | 1004-1104 | P/O ENGINE | S198 | 1073-1104 |
| MS3338-6839 | S1603 | 1004-1104 | P/O ENGINE | TC1 | 1004-1104 |
| MS3338-6839 | S641 | 1004-1104 | P/O ENGINE | TC2 | 1004-1104 |
| MS3338-6839 | S642 | 1004-1104 | P/O ENGINE ASSY | S97 | 1004-1104 |
| MS3338-6839 | S643 | 1004-1104 | P/O ENGINE ASSY | S98 | 1004-1104 |
| MS3338-6839 | S644 | 1004-1104 | P/O FWD WING | MT8 | 1004-1104 |
| MS35478-16833 | DS67 | 1004-1104 | P/O FWD WING | MT9 | 1004-1104 |
| MS35478-16833 | DS8 | 1004-1104 | P/O LH MAIN GEA | S85 | 1004-1104 |
| MS35478-307 | DS75 | 1004-1104 | P/O LH MAIN GEA | S87 | 1004-1104 |
| MS35489-13 | FT605 | 1004-1104 | P/O LH MAIN GEA | S89 | 1004-1104 |
| MS35489-13 | FT607 | 1004-1104 | P/O NOSE GEAR | S90 | 1004-1104 |

| PART NUMBER | CODE | EFF. | PART NUMBER | CODE | EFF. |
|---|---|---|---|---|---|
| P/O NOSE GEAR | S92 | 1004-1104 | RCR07G273J | R98 | 1004-1104 |
| P/O NOSE GEAR | S93 | 1004-1104 | RCR07G472J | R603 | 1004-1104 |
| P/O NOSE LDG | E45 | 1004-1104 | RCR07G473J | R89 | 1004-1104 |
| P/O PACKAGE | S100 | 1004-1104 | RCR07G473J | R93 | 1004-1104 |
| P/O PM1803X1000 | RT14 | 1004-1104 | RCR07GF102J | R23 | 1004-1104 |
| P/O PM1803X1000 | RT15 | 1004-1104 | RCR07GF102J | R87 | 1004-1104 |
| P/O PM1803X1000 | RT16 | 1004-1104 | RCR07GF102J | R90 | 1004-1104 |
| P/O PM1803X1000 | RT17 | 1004-1104 | RCR07GF102J | R92 | 1004-1104 |
| P/O PM1803X1000 | RT18 | 1004-1104 | RCR07GF103J | R100 | 1004-1104 |
| P/O PM1803X1000 | RT19 | 1004-1104 | RCR07GF103J | R103 | 1004-1104 |
| P/O RH MAIN GEA | S8 | 1004-1104 | RCR07GF103J | R104 | 1004-1104 |
| P/O RH MAIN GEA | S84 | 1004-1104 | RCR07GF103J | R105 | 1004-1104 |
| P/O RH MAIN GEA | S86 | 1004-1104 | RCR07GF103J | R106 | 1004-1104 |
| P13TPR2E2K | R609 | 1004-1104 | RCR07GF103J | R107 | 1004-1104 |
| P13TPR2E2K | R611 | 1004-1104 | RCR07GF103J | R108 | 1004-1104 |
| P21021 | L21 | 1004-1104 | RCR07GF103J | R22 | 1004-1104 |
| P2-110312 | S76 | 1004-1018 | RCR07GF103J | R99 | 1004-1104 |
| P24023 | M23 | 1004-1104 | RCR07GF332J | R25 | 1004-1104 |
| PART OF UMT-14B | B601 | 1004-1104 | RCR07GF332J | R26 | 1004-1104 |
| PART OF UMT-15B | B600 | 1004-1104 | RCR07GF332J | R27 | 1004-1104 |
| PDLM 90 | CB16 | 1004-1104 | RCR07GF332J | R28 | 1004-1104 |
| PDLM 90 | CB17 | 1004-1104 | RCR07GF472J | R24 | 1004-1104 |
| PDLM-50 | CB160 | 1004-1104 | RCR20G102J | R113 | 1004-1104 |
| PDLM-50 | CB161 | 1004-1104 | RCR20G331J | R94 | 1004-1104 |
| PYLB51541 | L27 | 1004-1104 | RCR20GF222J | R123 | 1058-1104 |
| PYLB51541 | L28 | 1004-1104 | RCR20GF222J | R14 | 1004-1104 |
| PYLB51541 | L30 | 1004-1104 | RCR20GF222J | R33 | 1004-1104 |
| PYLB51541 | L31 | 1004-1104 | RCR20GF222J | R34 | 1004-1104 |
| RB10 56R J | R618 | 1004-1104 | RCR20GF222J | R37 | 1004-1104 |
| RB10-150R-J | R618 | 1016-1080 | RCR20GF222J | R38 | 1004-1104 |
| RB10-150R-J | R618 | 1082-1104 | RCR20GF222J | R91 | 1004-1104 |
| RBR54L0R590FM | R677 | 1004-1104 | RCR20GF471J | R15 | 1004-1104 |
| RC59-01 | M602 | 1004-1004 | RCR20GF471J | R35 | 1004-1104 |
| RCM60ACL2 | M25 | 1004-1104 | RCR20GF471J | R36 | 1004-1104 |
| RCR07G103J | R675 | 1004-1104 | RCR20GF472J | R77 | 1004-1104 |
| RCR07G103J | R678 | 1004-1104 | RCR32G181J | R118 | 1004-1104 |
| RCR07G121J | R88 | 1004-1104 | RCR32G390J | R608 | 1004-1104 |
| RCR07G123J | R600 | 1004-1104 | RCR32G390J | R610 | 1004-1104 |
| RCR07G123J | R602 | 1004-1104 | RCR32G390J | R612 | 1004-1104 |
| RCR07G222J | R674 | 1004-1104 | RER65F80R6R | R618 | 1006-1015 |
| RCR07G273J | R97 | 1004-1104 | RGS10-48 | E611 | 1004-1104 |

| PART NUMBER | CODE | EFF. | PART NUMBER | CODE | EFF. |
|---|---|---|---|---|---|
| RKC04-100KOHM | R111 | 1004-1104 | SCD5963-21 | DS609 | 1004-1104 |
| RKC04-100KOHM | R121 | 1004-1104 | SCD5963-26 | DS13 | 1004-1104 |
| RKC04-10KOHM | R119 | 1004-1104 | SCD5963-27 | DS76 | 1058-1104 |
| RKC04-15KOHM | R120 | 1004-1104 | SCD5963-29 | DS78 | 1004-1104 |
| RKC04-220OHM | R110 | 1004-1104 | SCD5963-30 | DS79 | 1004-1104 |
| RKC04-220OHM | R114 | 1004-1104 | SCD5963-31 | DS610 | 1004-1104 |
| RKC04-2E2KOHM | R109 | 1004-1104 | SI0VS20K11 | RV17 | 1004-1104 |
| RKC04-2E2KOHM | R112 | 1004-1104 | SI0VS20K11 | RV18 | 1004-1104 |
| RKC04-2E2KOHM | R115 | 1004-1104 | SIOVS20K11 | RV1 | 1004-1104 |
| RKC04-2E2KOHM | R601 | 1004-1104 | SIOVS20K11 | RV10 | 1004-1104 |
| RKC04-2E7KOHM | R117 | 1004-1104 | SIOVS20K11 | RV11 | 1004-1104 |
| RKC-05-25E5KOHM | R613 | 1004-1104 | SIOVS20K11 | RV12 | 1004-1104 |
| RKC05-270OHM | R116 | 1004-1104 | SIOVS20K11 | RV13 | 1004-1104 |
| RR54520-C | B3 | 1004-1053 | SIOVS20K11 | RV14 | 1004-1104 |
| RR54520-C | B4 | 1004-1053 | SIOVS20K11 | RV15 | 1004-1104 |
| RR54520-C | B5 | 1004-1053 | SIOVS20K11 | RV16 | 1004-1104 |
| RR54520-C | B6 | 1004-1053 | SIOVS20K11 | RV2 | 1004-1104 |
| RSS104E7OHMTA | R102 | 1004-1104 | SIOVS20K11 | RV7 | 1004-1104 |
| RSS25470OHMTA | R101 | 1004-1104 | SIOVS20K11 | RV8 | 1004-1104 |
| RTV501K5JSF7559 | R10 | 1004-1104 | SIOVS20K11 | RV9 | 1004-1104 |
| S300-A7B3 | K1600 | 1039-1104 | SIOVS20K25 | RV3 | 1004-1104 |
| S400-A3A2 | K102 | 1004-1104 | SIOVS20K25 | RV4 | 1004-1104 |
| S500-A3A10 | K100 | 1004-1104 | SIOVS20K25 | RV5 | 1004-1104 |
| S500-A3A10 | K101 | 1004-1104 | SIOVS20K25 | RV6 | 1004-1104 |
| SCD5963-01 | DS12 | 1004-1104 | SK30-1877-1 | DS6 | 1004-1104 |
| SCD5963-03 | DS25 | 1004-1104 | SLZ7306 | MT47 | 1004-1104 |
| SCD5963-04 | DS16 | 1004-1104 | SLZ7778 | E27 | 1004-1104 |
| SCD5963-05 | DS13 | 1004-1104 | SLZ9157-3 | ID608 | 1004-1041 |
| SCD5963-06 | DS64 | 1004-1104 | SM1-1A | F1 | 1004-1104 |
| SCD5963-07 | DS43 | 1004-1104 | SM1-1A | F10 | 1038-1104 |
| SCD5963-08 | DS70 | 1004-1104 | SM1-1A | F11 | 1004-1104 |
| SCD5963-09 | DS23 | 1004-1104 | SM1-1A | F12 | 1004-1104 |
| SCD5963-10 | DS22 | 1004-1104 | SM1-1A | F13 | 1004-1104 |
| SCD5963-11 | DS38 | 1004-1104 | SM1-1A | F14 | 1004-1104 |
| SCD5963-12 | DS35 | 1004-1104 | SM1-1A | F18 | 1004-1104 |
| SCD5963-13 | DS39 | 1004-1104 | SM1-1A | F19 | 1004-1104 |
| SCD5963-14 | DS36 | 1004-1104 | SM1-1A | F3 | 1004-1104 |
| SCD5963-15 | DS40 | 1004-1104 | SM1-1A | F5 | 1004-1104 |
| SCD5963-16 | DS37 | 1004-1104 | SM1-1A | F8 | 1004-1104 |
| SCD5963-18 | DS605 | 1004-1104 | SM1-1A | F9 | 1004-1104 |
| SCD5963-19 | DS76 | 1057-1057 | SM1-250 MA | F7 | 1004-1104 |

| PART NUMBER | CODE | EFF. |
|---|---|---|
| SM1-250MA | F2 | 1004-1104 |
| SM1-2A | F10 | 1004-1037 |
| SM1-2A | F16 | 1004-1104 |
| SM1-500MA | F6 | 1004-1104 |
| SM2646-1 | B26 | 1004-1104 |
| SM600BA100A1 | K31 | 1058-1104 |
| SM600BA100N1 | K31 | 1004-1057 |
| SM600BA10A1 | K87 | 1004-1104 |
| SM600BA10A1 | K88 | 1004-1104 |
| SM600BA25N1 | K23 | 1004-1104 |
| SM600BA35N1 | K24 | 1004-1104 |
| SM600BA35N1 | K86 | 1004-1104 |
| SM600BA50N1 | K103 | 1004-1104 |
| SM600BA50N1 | K104 | 1004-1104 |
| SM600BA50N1 | K105 | 1004-1104 |
| SM600BA50N1 | K57 | 1004-1104 |
| SM600BA50N1 | K58 | 1004-1104 |
| SM600BA75N1 | K25 | 1004-1104 |
| SM600BA75N1 | K26 | 1004-1104 |
| ST340-2GP | HR3 | 1004-1104 |
| ST340-2GP | HR4 | 1004-1104 |
| ST340-2GP | HR8 | 1004-1104 |
| ST344-2GP | HR5 | 1004-1104 |
| ST344-2GP | HR6 | 1004-1104 |
| SYLC50576-2 | B27 | 1004-1104 |
| TBD | ID605 | 1038-1104 |
| TH250-14JB | AE708 | 1004-1104 |
| TR992-10 | E1706 | 1004-1104 |
| TR992-10 | E1707 | 1004-1104 |
| TR992-10 | E1708 | 1004-1104 |
| TR992-10 | E1709 | 1004-1104 |
| TR992-10 | E1710 | 1004-1104 |
| TR992-10 | E1711 | 1004-1104 |
| UES803 | CR1 | 1004-1104 |
| UES803 | CR2 | 1004-1104 |
| UES803 | CR3 | 1004-1104 |
| UES803 | CR4 | 1004-1104 |
| UES803 | CR5 | 1004-1104 |
| UES803 | CR6 | 1004-1104 |
| UES803 | CR7 | 1004-1104 |
| ULN2004A | IC3 | 1004-1104 |
| V3 | S105 | 1004-1104 |
| V3 | S106 | 1004-1104 |
| V3-101D8 | S123 | 1004-1104 |
| V3-101D8 | S124 | 1004-1104 |
| V3-101D8 | S125 | 1004-1104 |
| V3-101D8 | S126 | 1004-1104 |
| V3-101D8 | S127 | 1004-1104 |
| V3-101D8 | S128 | 1004-1104 |
| V3-101D8 | S129 | 1004-1104 |
| V3-101D8 | S131 | 1004-1104 |
| V3-101D8 | S132 | 1004-1104 |
| V3-101D8 | S133 | 1004-1104 |
| V3L104D8 | S121 | 1004-1104 |
| V3L104D8 | S122 | 1004-1104 |
| V3L104D8 | S130 | 1004-1104 |
| V3L104D8 | S1601 | 1004-1104 |
| V3L104D8 | S179 | 1004-1104 |
| VF10-347 | E601 | 1004-1104 |
| VF10-347 | E602 | 1004-1104 |
| VS400-320-D002 | K102 | 1004-1104 |

# CONNECTORS - ALPHANUMERIC LIST

## 1. General

This section gives an alphanumeric list of the electrical connectors (plug and receptacles) appearing on the wiring diagrams in this manual.
The list provides the Piaggio-assigned code number, the specific nomenclature, its zone location in the airplane, the part number with effectivity.
Refer to the Chapter 6 "Dimensions and Areas" of the Maintenance Manual where the Airplane Zoning System and the location codes are explained.

## 2. Connectors List

| CODE | NOMENCLATURE | LOCATION | PART NUMBER | EFF. |
|---|---|---|---|---|
| G10 | HOUSING | FS 290 RH | 201298-1 | 1004 1104 |
| G10-(16/18) | SOCKET-(16/18) | G10 CONNECTOR | 200333-1 | 1004 1104 |
| G10-(20/22) | SOCKET-(20/22) | G10 CONNECTOR | 201328-1 | 1004 1104 |
| G101 | GROUND STUD | 3' SPAR , L WING | NAS6806A13 | 1004 1104 |
| G102 | GROUND STUD | 3' SPAR , R WING | NAS6806A13 | 1004 1104 |
| G103 | HOUSING | FS 6965 L | 201298-1 | 1004 1104 |
| G103-(16/18) | SOCKET-(16/18) | G103 CONNECTOR | 200333-1 | 1004 1104 |
| G103-(20/22) | SOCKET-(20/22) | G103 CONNECTOR | 201328-1 | 1004 1104 |
| G103-CP | CABLE CLAMP | G103 CONNECTOR | 200686-1 | 1004 1104 |
| G103-JW | JACKSCREW | G103 CONNECTOR | 203535-2 | 1004 1104 |
| G104 | HOUSING | FS 6965 R | 201298-1 | 1004 1104 |
| G104-(16/18) | SOCKET-(16/18) | G104 CONNECTOR | 200333-1 | 1004 1104 |
| G104-(20/22) | SOCKET-(20/22) | G104 CONNECTOR | 201328-1 | 1004 1104 |
| G104-CP | CABLE CLAMP | G104 CONNECTOR | 200686-1 | 1004 1104 |
| G104-JW | JACKSCREW | G104 CONNECTOR | 203535-2 | 1004 1104 |
| G105 | GROUND STUD | 3' SPAR , L WING | NAS6406A3 | 1004 1104 |
| G106 | GROUND STUD | 3' SPAR , R WING | NAS6406A3 | 1004 1104 |
| G108 | GROUND STUD | ON FR 6710 | NAS6203-3 | 1004 1104 |
| G109 | GROUND STUD | WING TIP , RH | NAS7902A | 1004 1104 |
| G10-CP | CABLE CLAMP | G10 CONNECTOR | 200686-1 | 1004 1104 |
| G10-JW | JACKSCREW | G10 CONNECTOR | 203535-2 | 1004 1104 |
| G11 | GROUND STUD | ON FR 1 | AN4-3A | 1004 1104 |
| G110 | GROUND STUD | WING TIP , RH | NAS7902A | 1004 1104 |
| G111 | GROUND STUD | ON FR 6710 | MS35206-245 | 1004 1104 |
| G112 | GROUND STUD | ON FR 7790 | MS35206-226 | 1004 1104 |

| CODE | NOMENCLATURE | LOCATION | PART NUMBER | EFF. |
|---|---|---|---|---|
| G113 | HOUSING | 410 | 201298-1 | 1004 1104 |
| G113-(16/18) | SOCKET-(16/18) | G113 CONNECTOR | 200333-1 | 1004 1104 |
| G113-(20/22) | SOCKET-(20/22) | G113 CONNECTOR | 201328-1 | 1004 1104 |
| G113-CP | CABLE CLAMP | G113 CONNECTOR | 200686-1 | 1004 1104 |
| G113-JW | JACKSCREW | G113 CONNECTOR | 203535-2 | 1004 1104 |
| G114 | HOUSING | 420 | 201298-1 | 1004 1104 |
| G114-(16/18) | SOCKET-(16/18) | G114 CONNECTOR | 200333-1 | 1004 1104 |
| G114-(20/22) | SOCKET-(20/22) | G114 CONNECTOR | 201328-1 | 1004 1104 |
| G114-CP | CABLE CLAMP | G114 CONNECTOR | 200686-1 | 1004 1104 |
| G114-JW | JACKSCREW | G114 CONNECTOR | 203535-2 | 1004 1104 |
| G115 | HOUSING | FS 8154 | 201298-1 | 1004 1104 |
| G115-(16/18) | SOCKET-(16/18) | G115 CONNECTOR | 200333-1 | 1004 1104 |
| G115-(20/22) | SOCKET-(20/22) | G115 CONNECTOR | 201328-1 | 1004 1104 |
| G115-CP | CABLE CLAMP | G115 CONNECTOR | 200686-1 | 1004 1104 |
| G115-JW | JACKSCREW | G115 CONNECTOR | 203535-2 | 1004 1104 |
| G116 | HOUSING | 252 | 201298-1 | 1004 1104 |
| G116-(20/22) | SOCKET-(20/22) | G116 CONNECTOR | 201328-1 | 1004 1104 |
| G116-CP | CABLE CLAMP | G116 CONNECTOR | 200686-1 | 1004 1104 |
| G116-JW | JACKSCREW | G116 CONNECTOR | 203535-2 | 1004 1104 |
| G117 | HOUSING | 251 | 201298-1 | 1004 1104 |
| G117-(16/18) | SOCKET-(16/18) | G117 CONNECTOR | 200333-1 | 1004 1104 |
| G117-(20/22) | SOCKET-(20/22) | G117 CONNECTOR | 201328-1 | 1004 1104 |
| G117-CP | CABLE CLAMP | G117 CONNECTOR | 200686-1 | 1004 1104 |
| G117-JW | JACKSCREW | G117 CONNECTOR | 203535-2 | 1004 1104 |
| G118 | GROUND STUD | ON FR 8140 | MS35207-263 | 1004 1104 |
| G119 | GROUND STUD | ON FR 6710 | NAS6204-3 | 1004 1104 |
| G12 | GROUND STUD | ON FR 1 | AN4-3A | 1004 1104 |
| G120 | GROUND STUD | R WING , POS 440 | MS35206-244 | 1004 1104 |
| G121 | GROUND STUD | L WING , POS 440 | MS35206-244 | 1004 1104 |
| G122 | GROUND STUD | AIL TRIM ACTR STUD | MS27039C1-08 | 1004 1104 |
| G123 | GROUND STUD | L WING , RIB 1510 | MS35206-245 | 1004 1104 |
| G124 | GROUND STUD | R WING , RIB 1510 | MS35206-245 | 1004 1104 |
| G129 | HOUSING | WS 1510 L WING | 201298-1 | 1004 1104 |

| CODE | NOMENCLATURE | LOCATION | PART NUMBER | EFF. |
|---|---|---|---|---|
| G129-(16/18) | SOCKET-(16/18) | G129 CONNECTOR | 200333-1 | 1004 1104 |
| G129-(20/22) | SOCKET-(20/22) | G129 CONNECTOR | 201328-1 | 1004 1104 |
| G129-CP | CABLE CLAMP | G129 CONNECTOR | 200686-1 | 1004 1104 |
| G129-JW | JACKSCREW | G129 CONNECTOR | 203535-2 | 1004 1104 |
| G130 | HOUSING | WS 1510 L WING | 201298-1 | 1004 1104 |
| G130-(16/18) | SOCKET-(16/18) | G130 CONNECTOR | 200333-1 | 1004 1104 |
| G130-(20/22) | SOCKET-(20/22) | G130 CONNECTOR | 201328-1 | 1004 1104 |
| G130-CP | CABLE CLAMP | G130 CONNECTOR | 200686-1 | 1004 1104 |
| G130-JW | JACKSCREW | G130 CONNECTOR | 203535-2 | 1004 1104 |
| G133 | GROUND STUD | ON FR 8140 | MS35207-263 | 1004 1104 |
| G137 | GROUND STUD | FLASHER UNIT STUD | NAS6102A8 | 1004 1104 |
| G138 | GROUND STUD | MAIN JUNCTION BOX | MS35206-244 | 1004 1104 |
| G139 | GROUND STUD | MAIN JUNCTION BOX | MS35206-244 | 1004 1104 |
| G14 | GROUND STUD | ON FR 11 | MS35206-228 | 1004 1104 |
| G140 | GROUND STUD | MAIN JUNCTION BOX | MS35206-244 | 1004 1104 |
| G141 | GROUND STUD | MAIN JUNCTION BOX | MS35206-244 | 1004 1104 |
| G142 | GROUND STUD | MAIN JUNCTION BOX | MS35206-244 | 1004 1104 |
| G143 | GROUND STUD | ON FR 23 | MS35206-244 | 1004 1104 |
| G144 | GROUND STUD | ON FR 23 | MS35206-244 | 1004 1104 |
| G145 | GROUND STUD | ON FR 35 | MS35206-244 | 1004 1104 |
| G146 | GROUND STUD | ON FR 35 | MS35206-244 | 1004 1104 |
| G148 | GROUND STUD | ON FR 24 | MS35206-244 | 1004 1104 |
| G150 | GROUND STUD | ON FR 16 | MS35206-228 | 1004 1104 |
| G152 | GROUND STUD | ON STA 8140 | MS35206-243 | 1004 1104 |
| G154 | GROUND STUD | ON STA 8345 | MS21043-4 | 1004 1104 |
| G155 | GROUND STUD | TOP OF VERTICAL FIN | NAS1802-08-6 | 1004 1104 |
| G156 | GROUND STUD | ON FR 6000 | MS35206-244 | 1004 1104 |
| G157 | GROUND STUD | ON FR 6000 | MS35206-244 | 1004 1104 |
| G158 | GROUND STUD | ON FR 6000 | MS35206-244 | 1004 1104 |
| G159 | GROUND STUD | ON FR 6000 | MS35206-244 | 1004 1104 |
| G16 | GROUND STUD | INSTR.PNL | MS35206-228 | 1004 1104 |
| G160 | GROUND STUD | ON FR 13 | MS35206-228 | 1004 1104 |
| G1600 | HOUSING | FS 6000 R | 201298-1 | 1004 1104 |

| CODE | NOMENCLATURE | LOCATION | PART NUMBER | EFF. |
|---|---|---|---|---|
| G1600-(16/18) | SOCKET-(16/18) | G1600 CONNECTOR | 200333-1 | 1004 1104 |
| G1600-(20/22) | SOCKET-(20/22) | G1600 CONNECTOR | 201328-1 | 1004 1104 |
| G1600-CP | CABLE CLAMP | G1600 CONNECTOR | 200686-1 | 1004 1104 |
| G1600-JW | JACKSCREW | G1600 CONNECTOR | 203535-2 | 1004 1104 |
| G1601 | HOUSING | FS 6000 L | 201298-1 | 1004 1104 |
| G1601-(16/18) | SOCKET-(16/18) | G1601 CONNECTOR | 200333-1 | 1004 1104 |
| G1601-(20/22) | SOCKET-(20/22) | G1601 CONNECTOR | 201328-1 | 1004 1104 |
| G1601-CP | CABLE CLAMP | G1601 CONNECTOR | 200686-1 | 1004 1104 |
| G1601-JW | JACKSCREW | G1601 CONNECTOR | 203535-2 | 1004 1104 |
| G1602 | GROUND STUD | TBD | TBD | 1004 1104 |
| G1603 | GROUND STUD | TBD | TBD | 1004 1104 |
| G1606 | GROUND STUD | TBD | TBD | 1004 1104 |
| G1608 | HOUSING | FS 228 R | 201298-1 | 1004 1104 |
| G1608-(16/18) | SOCKET-(16/18) | G160 CONNECTOR | 200333-1 | 1004 1104 |
| G1608-(20/22) | SOCKET-(20/22) | G160 CONNECTOR | 201328-1 | 1004 1104 |
| G1608-CP | CABLE CLAMP | G1608 CONNECTOR | 200686-1 | 1004 1104 |
| G1608-JW | JACKSCREW | G1608 CONNECTOR | 203535-2 | 1004 1104 |
| G161 | GROUND STUD | ON FR 13 | MS35206-228 | 1004 1104 |
| G1612 | GROUND STUD | TBD | TBD | 1004 1104 |
| G1614 | GROUND STUD | CTRL PWR & RTN | TBD | 1004 1104 |
| G162 | GROUND STUD | FREON BLOWER | TBD | 1004 1104 |
| G163 | GROUND STUD | FREON BLOWER | TBD | 1004 1104 |
| G164 | GROUND STUD | ON FR 7440 | MS35207-279 | 1004 1104 |
| G165 | GROUND STUD | ON FR 17 STRETCHERS | NAS6204-3 | 1004 1104 |
| G166 | GROUND STUD | ON FR 17 STRETCHERS | NAS6204-3 | 1004 1104 |
| G168 | GROUND STUD | ON REL LIGHT SUPP | NAS1802-08-6 | 1034 1104 |
| G169 | GROUND STUD | ON FRAME .. AUX 3 | NAS6204-3 | 1004 1104 |
| G17 | GROUND STUD | ON FR 3 | MS35206-228 | 1004 1104 |
| G171 | GROUND STUD | ON VERTICAL FIN | MS35206-245 | 1034 1104 |
| G172 | GROUND STUD | ON FR 8140 | MS35206-245 | 1034 1104 |
| G173 | GROUND STUD | HEATER SYSTEM | TBD | 1046 1049 |
| G173 | GROUND STUD | HEATER SYSTEM | TBD | 1055 1056 |
| G173 | GROUND STUD | HEATER SYSTEM | TBD | 1058 1104 |
| G173 | GROUND STUD | HEATER SYSTEM | TBD | 1052 1053 |

| CODE | NOMENCLATURE | LOCATION | PART NUMBER | EFF. |
|---|---|---|---|---|
| G173 | GROUND STUD | HEATER SYSTEM | TBD | 1044 1044 |
| G173 | GROUND STUD | HEATER SYSTEM | TBD | 1041 1042 |
| G174 | GROUND STUD | DUCT TEMP CABIN | MS35206-228 | 1041 1104 |
| G178 | GROUND STUD | AUXILIARY 1 | TBD | 1004 1104 |
| G179 | GROUND STUD | AUXILIARY 1 | TBD | 1004 1104 |
| G19 | HOUSING | G19 CONNECTOR | 201298-1 | 1004 1104 |
| G19-(16/18) | SOCKET-(16/18) | G19 CONNECTOR | 200333-1 | 1004 1104 |
| G19-(20/22) | SOCKET-(20/22) | G19 CONNECTOR | 201328-1 | 1004 1104 |
| G19-CP | CABLE CLAMP | G19 CONNECTOR | 200686-1 | 1004 1104 |
| G19-JW | JACKSCREW | G19 CONNECTOR | 203535-2 | 1004 1104 |
| G20 | HOUSING | G20 CONNECTOR | 201298-1 | 1004 1104 |
| G20-(16/18) | SOCKET-(16/18) | G20 CONNECTOR | 200333-1 | 1004 1104 |
| G20-(20/22) | SOCKET-(20/22) | G20 CONNECTOR | 201328-1 | 1004 1104 |
| G20-CP | CABLE CLAMP | G20 CONNECTOR | 200686-1 | 1004 1104 |
| G20-JW | JACKSCREW | G20 CONNECTOR | 203535-2 | 1004 1104 |
| G21 | HOUSING | G21 CONNECTOR | 201298-1 | 1004 1104 |
| G21-(16/18) | SOCKET-(16/18) | G21 CONNECTOR | 200333-1 | 1004 1104 |
| G21-(20/22) | SOCKET-(20/22) | G21 CONNECTOR | 201328-1 | 1004 1104 |
| G21-CP | CABLE CLAMP | G21 CONNECTOR | 200686-1 | 1004 1104 |
| G21-JW | JACKSCREW | G21 CONNECTOR | 203535-2 | 1004 1104 |
| G22 | HOUSING | G22 CONNECTOR | 201298-1 | 1004 1104 |
| G22-(16/18) | SOCKET-(16/18) | G22 CONNECTOR | 200333-1 | 1004 1104 |
| G22-(20/22) | SOCKET-(20/22) | G22 CONNECTOR | 201328-1 | 1004 1104 |
| G22-CP | CABLE CLAMP | G22 CONNECTOR | 200686-1 | 1004 1104 |
| G22-JW | JACKSCREW | G22 CONNECTOR | 203535-2 | 1004 1104 |
| G23 | HOUSING | G23 CONNECTOR | 201298-1 | 1004 1104 |
| G23-(16/18) | SOCKET-(16/18) | G23 CONNECTOR | 200333-1 | 1004 1104 |
| G23-(20/22) | SOCKET-(20/22) | G23 CONNECTOR | 201328-1 | 1004 1104 |
| G23-CP | CABLE CLAMP | G23 CONNECTOR | 200686-1 | 1004 1104 |
| G23-JW | JACKSCREW | G23 CONNECTOR | 203535-2 | 1004 1104 |
| G24 | HOUSING | G24 CONNECTOR | 201298-1 | 1004 1104 |
| G24-(16/18) | SOCKET-(16/18) | G24 CONNECTOR | 200333-1 | 1004 1104 |

| CODE | NOMENCLATURE | LOCATION | PART NUMBER | EFF. |
|---|---|---|---|---|
| G24-(20/22) | SOCKET-(20/22) | G24 CONNECTOR | 201328-1 | 1004 1104 |
| G24-CP | CABLE CLAMP | G24 CONNECTOR | 200686-1 | 1004 1104 |
| G24-JW | JACKSCREW | G24 CONNECTOR | 203535-2 | 1004 1104 |
| G25 | GROUND STUD | ON FR 23 | TBD | 1010 1104 |
| G26 | GROUND STUD | ENGINE GND | TBD | 1031 1104 |
| G27 | GROUND STUD | ENGINE GND | TBD | 1031 1104 |
| G28 | GROUND STUD | ON FIRE WALL 1 | NAS1802-3-8 | 1031 1104 |
| G29 | GROUND STUD | ON FIRE WALL 1 | NAS1802-3-8 | 1031 1104 |
| G30 | GROUND STUD | ON FR 13 | MS35206-228 | 1004 1104 |
| G31 | GROUND STUD | ON FR 13 | MS35206-228 | 1004 1104 |
| G33 | HOUSING | G33 CONNECTOR | 201298-1 | 1004 1104 |
| G33-(16/18) | SOCKET-(16/18) | G33 CONNECTOR | 200333-1 | 1004 1104 |
| G33-(20/22) | SOCKET-(20/22) | G33 CONNECTOR | 201328-1 | 1004 1104 |
| G33-CP | CABLE CLAMP | G33 CONNECTOR | 200686-1 | 1004 1104 |
| G33-JW | JACKSCREW | G33 CONNECTOR | 203535-2 | 1004 1104 |
| G34 | HOUSING | G34 CONNECTOR | 201298-1 | 1004 1104 |
| G34-(16/18) | SOCKET-(16/18) | G34 CONNECTOR | 200333-1 | 1004 1104 |
| G34-(20/22) | SOCKET-(20/22) | G34 CONNECTOR | 201328-1 | 1004 1104 |
| G34-CP | CABLE CLAMP | G34 CONNECTOR | 200686-1 | 1004 1104 |
| G34-JW | JACKSCREW | G34 CONNECTOR | 203535-2 | 1004 1104 |
| G35 | GROUND STUD | ON RELAY K75 | MS35206-227 | 1004 1104 |
| G36 | GROUND STUD | ON RELAY K76 | MS35206-227 | 1004 1104 |
| G37 | GROUND STUD | ON RELAY K77 | MS35206-227 | 1004 1104 |
| G38 | GROUND STUD | ON FR 27 | MS35206-244 | 1004 1104 |
| G5 | HOUSING | BETW FS 80&290 L | 201298-1 | 1004 1104 |
| G5-(16/18) | SOCKET-(16/18) | G5 CONNECTOR | 200333-1 | 1004 1104 |
| G5-(20/22) | SOCKET-(20/22) | G5 CONNECTOR | 201328-1 | 1004 1104 |
| G50 | GROUND STUD | ON FR 30 | MS35206-244 | 1004 1104 |
| G5-CP | CABLE CLAMP | G5 CONNECTOR | 200686-1 | 1004 1104 |
| G5-JW | JACKSCREW | G5 CONNECTOR | 203535-2 | 1004 1104 |
| G6 | HOUSING | BETW FS 80&290 R | 201298-1 | 1004 1104 |
| G6-(16/18) | SOCKET-(16/18) | G6 CONNECTOR | 200333-1 | 1004 1104 |
| G6-(20/22) | SOCKET-(20/22) | G6 CONNECTOR | 201328-1 | 1004 1104 |
| G601 | HOUSING | FS 80 LH | 201298-1 | 1004 1104 |
| G601-(16/18) | SOCKET-(16/18) | G601 CONNECTOR | 200333-1 | 1004 1104 |
| G601-(20/22) | SOCKET-(20/22) | G601 CONNECTOR | 201328-1 | 1004 1104 |

| CODE | NOMENCLATURE | LOCATION | PART NUMBER | EFF. |
|---|---|---|---|---|
| G601-CP | CABLE CLAMP | G601 CONNECTOR | 200686-1 | 1004 1104 |
| G601-JW | JACKSCREW | G601 CONNECTOR | 203535-2 | 1004 1104 |
| G602 | HOUSING | FS 80 R | 201298-1 | 1004 1104 |
| G602-(16/18) | SOCKET-(16/18) | G602 CONNECTOR | 200333-1 | 1004 1104 |
| G602-(20/22) | SOCKET-(20/22) | G602 CONNECTOR | 201328-1 | 1004 1104 |
| G602-CP | CABLE CLAMP | G602 CONNECTOR | 200686-1 | 1004 1104 |
| G602-JW | JACKSCREW | G602 CONNECTOR | 203535-2 | 1004 1104 |
| G603 | HOUSING | FS 80 LH | 201298-1 | 1004 1104 |
| G603-(16/18) | SOCKET-(16/18) | G603 CONNECTOR | 200333-1 | 1004 1104 |
| G603-(20/22) | SOCKET-(20/22) | G603 CONNECTOR | 201328-1 | 1004 1104 |
| G603-CP | CABLE CLAMP | G603 CONNECTOR | 200686-1 | 1004 1104 |
| G603-JW | JACKSCREW | G603 CONNECTOR | 203535-2 | 1004 1104 |
| G604 | HOUSING | FS 80 R | 201298-1 | 1004 1104 |
| G604-(16/18) | SOCKET-(16/18) | G604 CONNECTOR | 200333-1 | 1004 1104 |
| G604-(20/22) | SOCKET-(20/22) | G604 CONNECTOR | 201328-1 | 1004 1104 |
| G604-CP | CABLE CLAMP | G604 CONNECTOR | 200686-1 | 1004 1104 |
| G604-JW | JACKSCREW | G604 CONNECTOR | 203535-2 | 1004 1104 |
| G605 | HOUSING | FS 0 LH | 201298-1 | 1004 1104 |
| G605-(16/18) | SOCKET-(16/18) | G605 CONNECTOR | 200333-1 | 1004 1104 |
| G605-(20/22) | SOCKET-(20/22) | G605 CONNECTOR | 201328-1 | 1004 1104 |
| G605-CP | CABLE CLAMP | G605 CONNECTOR | 200686-1 | 1004 1104 |
| G605-JW | JACKSCREW | G605 CONNECTOR | 203535-2 | 1004 1104 |
| G606 | HOUSING | FS 0 R | 201298-1 | 1004 1104 |
| G606-(16/18) | SOCKET-(16/18) | G606 CONNECTOR | 200333-1 | 1004 1104 |
| G606-(20/22) | SOCKET-(20/22) | G606 CONNECTOR | 201328-1 | 1004 1104 |
| G606-CP | CABLE CLAMP | G606 CONNECTOR | 200686-1 | 1004 1104 |
| G606-JW | JACKSCREW | G606 CONNECTOR | 203535-2 | 1004 1104 |
| G607 | HOUSING | FS 225 L | 201298-1 | 1004 1104 |
| G607-(16/18) | SOCKET-(16/18) | G607 CONNECTOR | 200333-1 | 1004 1104 |
| G607-(20/22) | SOCKET-(20/22) | G607 CONNECTOR | 201328-1 | 1004 1104 |
| G607-CP | CABLE CLAMP | G607 CONNECTOR | 200686-1 | 1004 1104 |
| G607-JW | JACKSCREW | G607 CONNECTOR | 203535-2 | 1004 1104 |

| CODE | NOMENCLATURE | LOCATION | PART NUMBER | EFF. |
|---|---|---|---|---|
| G608 | HOUSING | FS 225 R | 201298-1 | 1004 1104 |
| G608-(16/18) | SOCKET-(16/18) | G608 CONNECTOR | 200333-1 | 1004 1104 |
| G608-(20/22) | SOCKET-(20/22) | G608 CONNECTOR | 201328-1 | 1004 1104 |
| G608-CP | CABLE CLAMP | G608 CONNECTOR | 200686-1 | 1004 1104 |
| G608-JW | JACKSCREW | G608 CONNECTOR | 203535-2 | 1004 1104 |
| G609 | HOUSING | FS 1020 L | 201298-1 | 1004 1104 |
| G609-(16/18) | SOCKET-(16/18) | G609 CONNECTOR | 200333-1 | 1004 1104 |
| G609-(20/22) | SOCKET-(20/22) | G609 CONNECTOR | 201328-1 | 1004 1104 |
| G609-CP | CABLE CLAMP | G609 CONNECTOR | 200686-1 | 1004 1104 |
| G609-JW | JACKSCREW | G609 CONNECTOR | 203535-2 | 1004 1104 |
| G611 | HOUSING | FS 0 LH | 201298-1 | 1004 1104 |
| G611-(16/18) | SOCKET-(16/18) | G611 CONNECTOR | 200333-1 | 1004 1104 |
| G611-(20/22) | SOCKET-(20/22) | G611 CONNECTOR | 201328-1 | 1004 1104 |
| G611-CP | CABLE CLAMP | G611 CONNECTOR | 200686-1 | 1004 1104 |
| G611-JW | JACKSCREW | G611 CONNECTOR | 203535-2 | 1004 1104 |
| G612 | HOUSING | FS 0 R | 201298-1 | 1004 1104 |
| G612-(16/18) | SOCKET-(16/18) | G612 CONNECTOR | 200333-1 | 1004 1104 |
| G612-(20/22) | SOCKET-(20/22) | G612 CONNECTOR | 201328-1 | 1004 1104 |
| G612-CP | CABLE CLAMP | G612 CONNECTOR | 200686-1 | 1004 1104 |
| G612-JW | JACKSCREW | G612 CONNECTOR | 203535-2 | 1004 1104 |
| G613 | HOUSING | FS 225 | 201298-1 | 1004 1104 |
| G613-(16/18) | SOCKET-(16/18) | G613 CONNECTOR | 200333-1 | 1004 1104 |
| G613-(20/22) | SOCKET-(20/22) | G613 CONNECTOR | 201328-1 | 1004 1104 |
| G613-CP | CABLE CLAMP | G613 CONNECTOR | 200686-1 | 1004 1104 |
| G613-JW | JACKSCREW | G613 CONNECTOR | 203535-2 | 1004 1104 |
| G614 | HOUSING | FS 225 R | 201298-1 | 1004 1104 |
| G614-(16/18) | SOCKET-(16/18) | G614 CONNECTOR | 200333-1 | 1004 1104 |
| G614-(20/22) | SOCKET-(20/22) | G614 CONNECTOR | 201328-1 | 1004 1104 |
| G614-CP | CABLE CLAMP | G614 CONNECTOR | 200686-1 | 1004 1104 |
| G614-JW | JACKSCREW | G614 CONNECTOR | 203535-2 | 1004 1104 |
| G615 | GROUND STUD | ON STA 8378 HF | MS35207-264 | 1004 1104 |
| G616 | GROUND STUD | ON STA 8378 HF | MS35207-264 | 1004 1104 |

| CODE | NOMENCLATURE | LOCATION | PART NUMBER | EFF. |
|---|---|---|---|---|
| G617 | HOUSING | FS 225 L | 201298-1 | 1004 1104 |
| G617-(16/18) | SOCKET-(16/18) | G617 CONNECTOR | 200333-1 | 1004 1104 |
| G617-(20/22) | SOCKET-(20/22) | G617 CONNECTOR | 201328-1 | 1004 1104 |
| G617-CP | CABLE CLAMP | G617 CONNECTOR | 200686-1 | 1004 1104 |
| G617-JW | JACKSCREW | G617 CONNECTOR | 203535-2 | 1004 1104 |
| G622 | GROUND STUD | ADF MOUNT | MS35206-245 | 1004 1104 |
| G623 | GROUND STUD | DUAL ADF MOUNT | TBD | 1004 1104 |
| G624 | GROUND STUD | ON FR 33 | MS35206-244 | 1004 1104 |
| G625 | GROUND PLATE | MPU MOUNT | MS35206-244 | 1004 1104 |
| G626 | GROUND PLATE | DPU MOUNT | MS35206-244 | 1004 1104 |
| G627 | HOUSING | FS 395 L | 201298-1 | 1004 1104 |
| G627-(16/18) | SOCKET-(16/18) | G627 CONNECTOR | 200333-1 | 1004 1104 |
| G627-(20/22) | SOCKET-(20/22) | G627 CONNECTOR | 201328-1 | 1004 1104 |
| G627-CP | CABLE CLAMP | G627 CONNECTOR | 200686-1 | 1004 1104 |
| G627-JW | JACKSCREW | G627 CONNECTOR | 203535-2 | 1004 1104 |
| G628 | HOUSING | FS 225 L | 201298-1 | 1004 1104 |
| G628-(16/18) | SOCKET-(16/18) | G628 CONNECTOR | 200333-1 | 1004 1104 |
| G628-(20/22) | SOCKET-(20/22) | G628 CONNECTOR | 201328-1 | 1004 1104 |
| G628-CP | CABLE CLAMP | G628 CONNECTOR | 200686-1 | 1004 1104 |
| G628-JW | JACKSCREW | G628 CONNECTOR | 203535-2 | 1004 1104 |
| G629 | HOUSING | FS 80 L | 201298-1 | 1004 1104 |
| G629-(16/18) | SOCKET-(16/18) | G629 CONNECTOR | 200333-1 | 1004 1104 |
| G629-(20/22) | SOCKET-(20/22) | G629 CONNECTOR | 201328-1 | 1004 1104 |
| G629-CP | CABLE CLAMP | G629 CONNECTOR | 200686-1 | 1004 1104 |
| G629-JW | JACKSCREW | G629 CONNECTOR | 203535-2 | 1004 1104 |
| G630 | HOUSING | FS 1956.4 R | 201298-1 | 1010 1010 |
| G630-(16/18) | SOCKET-(16/18) | G630 CONNECTOR | 200333-1 | 1010 1010 |
| G630-(20/22) | SOCKET-(20/22) | G630 CONNECTOR | 201328-1 | 1010 1010 |
| G630-CP | CABLE CLAMP | G630 CONNECTOR | 200686-1 | 1010 1010 |
| G630-JW | JACKSCREW | G630 CONNECTOR | 203535-2 | 1010 1010 |
| G632 | GROUND STUD | ON FR 34 | MS35206-244 | 1004 1104 |
| G638 | CONNECTOR KIT | 281 | IA9351003 | 1004 1104 |
| G638-(16/18) | SOCKET-(16/18) | G638 CONNECTOR | 200333-1 | 1004 1104 |

| CODE | NOMENCLATURE | LOCATION | PART NUMBER | EFF. |
|---|---|---|---|---|
| G638-(20/22) | SOCKET-(20/22) | G638 CONNECTOR | 201328-1 | 1004 1104 |
| G639 | CONNECTOR KIT | 281 | IA9351003 | 1004 1104 |
| G639-(16/18) | SOCKET-(16/18) | G639 CONNECTOR | 200333-1 | 1004 1104 |
| G639-(20/22) | SOCKET-(20/22) | G639 CONNECTOR | 201328-1 | 1004 1104 |
| G640 | GROUND STUD | AUDIO 3 | TBD | 1004 1104 |
| G641 | GROUND STUD | ON VERTICAL FIN | MS35206-245 | 1034 1104 |
| G642 | GROUND STUD | ON VERTICAL FIN | MS35206-245 | 1034 1104 |
| G644 | GROUND STUD | ON FRAME TBD | TBD | 1004 1104 |
| G6-CP | CABLE CLAMP | G6 CONNECTOR | 200686-1 | 1004 1104 |
| G6-JW | JACKSCREW | G6 CONNECTOR | 203535-2 | 1004 1104 |
| G7 | HOUSING | FS 1130 L | 201298-1 | 1004 1104 |
| G7-(16/18) | SOCKET-(16/18) | G7 CONNECTOR | 200333-1 | 1004 1104 |
| G7-(20/22) | SOCKET-(20/22) | G7 CONNECTOR | 201328-1 | 1004 1104 |
| G7-CP | CABLE CLAMP | G7 CONNECTOR | 200686-1 | 1004 1104 |
| G7-JW | JACKSCREW | G7 CONNECTOR | 203535-2 | 1004 1104 |
| G8 | HOUSING | FS 1130 R | 201298-1 | 1004 1104 |
| G8-(16/18) | SOCKET-(16/18) | G8 CONNECTOR | 200333-1 | 1004 1104 |
| G8-(20/22) | SOCKET-(20/22) | G8 CONNECTOR | 201328-1 | 1004 1104 |
| G8-CP | CABLE CLAMP | G8 CONNECTOR | 200686-1 | 1004 1104 |
| G8-JW | JACKSCREW | G8 CONNECTOR | 203535-2 | 1004 1104 |
| G9 | HOUSING | BETW FS 290&500 L | 201298-1 | 1004 1104 |
| G9-(16/18) | SOCKET-(16/18) | G9 CONNECTOR | 200333-1 | 1004 1104 |
| G9-(20/22) | SOCKET-(20/22) | G9 CONNECTOR | 201328-1 | 1004 1104 |
| G9-CP | CABLE CLAMP | G9 CONNECTOR | 200686-1 | 1004 1104 |
| G9-JW | JACKSCREW | G9 CONNECTOR | 203535-2 | 1004 1104 |
| J1 | RECEPTACLE | EXTERNAL | MS3506-1 | 1004 1104 |
| J10 | RECEPTACLE | MAIN JUNCTION BOX | MS3474L16.23PW | 1004 1104 |
| J100 | RECEPTACLE | CENTER SW PNL | MS3474L24-61P | 1004 1104 |
| J1004 | COAX ADAPTER | CABIN VIDEO SYSTEM | 221988-1 | 1004 1104 |
| J1007 | COAX ADAPTER | CABIN VIDEO SYSTEM | 221988-1 | 1004 1104 |
| J100-BS | BACKSHELL | J100 CONNECTOR | M85049/31-24N | 1004 1009 |
| J100-BS | BACKSHELL | J100 CONNECTOR | M85049/31-24N | 1010 1015 |
| J100-BS | BACKSHELL | J100 CONNECTOR | M85049-31-24N | 1004 1104 |
| J101 | RECEPTACLE | AOA TRANSDUCER | MS3470L12-10S | 1004 1104 |
| J1011 | COAX ADAPTER | CABIN VIDEO SYSTEM | 221988-1 | 1004 1104 |
| J101-BS | BACKSHELL | J101 CONNECTOR | M85049-31-12N | 1004 1104 |

| CODE | NOMENCLATURE | LOCATION | PART NUMBER | EFF. |
|---|---|---|---|---|
| J101-BS | BACKSHELL | J101 CONNECTOR | M85049/31-12N | 1004 1104 |
| J1020 | RECEPTACLE | WRN HARNESS SECT | MS3120F24-61S | 1034 1104 |
| J1021 | RECEPTACLE | WRN HARNESS SECT | MS3120F22-55S | 1034 1104 |
| J1027 | RECEPTACLE | INTERFACE VCR/ MDP | 205161-1 | 1004 1104 |
| J1027-HD | HOOD | J1027 CONNECTOR | MD9-000J | 1004 1104 |
| J1027-LT | LOCKING TAB | J1027 CONNECTOR | MD15-000-0V3 | 1004 1104 |
| J1027-PIN | CONTACT | J1027 CONNECTOR | 205090-1 | 1004 1104 |
| J1030 | RECEPTACLE | AFT PRESS BHD | MS3474L20-41S | 1004 1104 |
| J1030-BS | BACKSHELL | J103 CONNECTOR | M85049/31-20N | 1004 1104 |
| J1034 | RECEPTACLE | AUDIO 3 | DAMA15S | 1004 1104 |
| J1034-HD | HOOD | J1034 CONNECTOR | D15-000KVL | 1004 1104 |
| J1034-LT | LOCKING TAB | J1034 CONNECTOR | MD15-000-0V3 | 1004 1104 |
| J1040 | RECEPTACLE | AUDIO 3 MIC | PJT430 | 1004 1104 |
| J1042 | RECEPTACLE | AUDIO 3 PHONE | PJB430 | 1004 1104 |
| J1044 | RECEPTACLE | AUDIO 3 | DEMA9S | 1004 1104 |
| J1044-HD | HOOD | J1044 CONNECTOR | MD9-000J | 1004 1104 |
| J1044-LT | LOCKING TAB | J1044 CONNECTOR | MD15-000-0V3 | 1004 1104 |
| J105 | RECEPTACLE | CENTER SW PNL | MS27474T24B4P | 1004 1104 |
| J105-BS | BACKSHELL | J105 CONNECTOR | M85049/27-24N | 1010 1015 |
| J105-BS | BACKSHELL | J105 CONNECTOR | M85049/27-24N | 1004 1009 |
| J105-BS | BACKSHELL | J105 CONNECTOR | M85049-27-24N | 1004 1104 |
| J1064 | RECEPTACLE | TDR-94 | DBMA25S | 1004 1104 |
| J1064-HD | HOOD | J1064 CONNECTOR | D25-000JVL | 1004 1104 |
| J1064-LT | LOCKING TAB | J1064 CONNECTOR | MD15-000-0V3 | 1004 1104 |
| J1072 | RECEPTACLE | SEE E111 | DAMA15P | 1004 1104 |
| J1072-HD | HOOD | J1072 CONNECTOR | D15-000KVL | 1004 1104 |
| J1074 | RECEPTACLE | SEE S658 . | DEMA9P | 1004 1104 |
| J1074-LT | LOCKING TAB | J1074 CONNECTOR | MD15-000-0V3 | 1004 1104 |
| J1075 | RECEPTACLE | SEE S657. | DEMA9P | 1004 1104 |
| J1075-LT | LOCKING TAB | J1075 CONNECTOR | MD15-000-0V3 | 1004 1104 |
| J1076 | CONNECTOR | SW.DEVICE/RVSM | 205210-1 | 1004 1104 |
| J1076-HD | HOOD | J1076 CONNECTOR | MD37-000J | 1004 1104 |
| J1076-LT | LOCKING TAB | J1076 CONNECTOR | MD15-000-0V3 | 1004 1104 |
| J1076-PIN | PIN | J1076 CONNECTOR | 205089-1 | 1004 1104 |
| J1089 | RECEPTACLE | EFIS FAN | 1-640508-0 | 1063 1104 |
| J1089-PIN | PIN | J1089 CONNECTOR | 640545-2 | 1063 1104 |
| J10-BS | BACKSHELL | J10 CONNECTOR | M85049/31-16N | 1004 1009 |
| J10-BS | BACKSHELL | J10 CONNECTOR | M85049-31-16N | 1004 1104 |
| J110 | RECEPTACLE | ROLL ACTUATOR | MS3470L10-6S | 1004 1104 |

| CODE | NOMENCLATURE | LOCATION | PART NUMBER | EFF. |
|---|---|---|---|---|
| J110-BS | BACKSHELL | J110 CONNECTOR | M85049-31-10N | 1004 1104 |
| J112 | RECEPTACLE | PRI PITCH TRIM ACT | MS3470L14-12S | 1004 1104 |
| J112-BS | BACKSHELL | J112 CONNECTOR | M85049-31-14N | 1004 1104 |
| J113 | RECEPTACLE | SEC PITCH TRIM ACT | MS3470L14-5S | 1004 1104 |
| J113-BS | BACKSHELL | J113 CONNECTOR | M85049-31-14N | 1004 1104 |
| J116 | RECEPTACLE | COPILOT SWITCH PNL | MS3474L22-41P | 1044 1044 |
| J116 | RECEPTACLE | COPILOT SWITCH PNL | MS3474L22-41P | 1041 1042 |
| J116 | RECEPTACLE | COPILOT SWITCH PNL | MS3474L10-6P | 1004 1040 |
| J116 | RECEPTACLE | COPILOT SWITCH PNL | MS3474L10-6P | 1043 1043 |
| J116 | RECEPTACLE | COPILOT SWITCH PNL | MS3474L10-6P | 1045 1045 |
| J116 | RECEPTACLE | COPILOT SWITCH PNL | MS3474L10-6P | 1057 1057 |
| J116 | RECEPTACLE | COPILOT SWITCH PNL | MS3474L22-41P | 1046 1049 |
| J116 | RECEPTACLE | COPILOT SWITCH PNL | MS3474L22-41P | 1052 1053 |
| J116 | RECEPTACLE | COPILOT SWITCH PNL | MS3474L22-41P | 1055 1056 |
| J116 | RECEPTACLE | COPILOT SWITCH PNL | MS3474L22-41P | 1058 1104 |
| J116 | RECEPTACLE | COPILOT SW PNL | MS3474L10-6P | 1054 1054 |
| J116 | RECEPTACLE | COPILOT SWITCH PNL | MS3474L10-6P | 1050 1051 |
| J116-BS | BACKSHELL | J116 CONNECTOR | M85049-31-22N | 1044 1044 |
| J116-BS | BACKSHELL | J116 CONNECTOR | M85049-31-22N | 1041 1042 |
| J116-BS | BACKSHELL | J116 CONNECTOR | M85049-31-10N | 1045 1045 |
| J116-BS | BACKSHELL | J116 CONNECTOR | M85049-31-10N | 1043 1043 |
| J116-BS | BACKSHELL | J116 CONNECTOR | M85049-31-10N | 1050 1051 |
| J116-BS | BACKSHELL | J116 CONNECTOR | M85049-31-22N | 1046 1049 |
| J116-BS | BACKSHELL | J116 CONNECTOR | M85049-31-22N | 1052 1053 |
| J116-BS | BACKSHELL | J116 CONNECTOR | M85049-31-10N | 1004 1040 |
| J116-BS | BACKSHELL | J116 CONNECTOR | M85049/31-10N | 1004 1009 |
| J118 | RECEPTACLE | TRIM SWITCH PNL | MS3122E16-26P | 1004 1104 |
| J120 | RECEPTACLE | THROTTLE QUAD | MS3474L16-26S | 1004 1100 |
| J120-BS | BACKSHELL | J120 CONNECTOR | M85049-31-16N | 1004 1100 |
| J120-BS | BACKSHELL | J120 CONNECTOR | M85049/31-16N | 1004 1015 |

| CODE | NOMENCLATURE | LOCATION | PART NUMBER | EFF. |
|---|---|---|---|---|
| J124 | RECEPTACLE | W-H R ENG FWD ZONE | MS3474L16-26S | 1004 1082 |
| J124 | RECEPTACLE | W-H R ENG FWD ZONE | D38999/20KE26SN | 1083 1100 |
| J124-BS | BACKSHELL | J124 CONNECTOR | M85049-31-16N | 1004 1082 |
| J124-BS | BACKSHELL | J124 CONNECTOR | M85049/31-16N | 1004 1104 |
| J124-SBA | SHRINK BOOT | J124 CONNECTOR | 310HS001Z117. 204 | 1083 1100 |
| J125 | RECEPTACLE | W-H L ENG FWD ZONE | MS3474L16-26S | 1004 1100 |
| J125 | RECEPTACLE | W-H L ENG FWD ZONE | D38999/20KE26SN | 1101 1101 |
| J125 | RECEPTACLE | W-H L ENG FWD ZONE | MS3474L16-26S | 1102 1104 |
| J125-BS | BACKSHELL | J125 CONNECTOR | M85049-31-16N | 1004 1100 |
| J125-BS | BACKSHELL | J125 CONNECTOR | M85049-31-16N | 1102 1104 |
| J125-BS | BACKSHELL | J125 CONNECTOR | M85049/31-16N | 1004 1104 |
| J125-BS | BACKSHELL | J125 CONNECTOR | 310HS001Z117-204 | 1101 1101 |
| J126 | RECEPTACLE | W-H R ENG AFT ZONE | MS3474L16-26S | 1004 1018 |
| J126 | RECEPTACLE | W-H R ENG AFT ZONE | MS3474L18-32P | 1019 1082 |
| J126 | CONNECTOR | W-H R ENG AFT ZONE | D38999/24KG39SN | 1083 1100 |
| J126-(AL) | SOCKET (AL) | J126 CONNECTOR | M39029/88-487 | 1083 1100 |
| J126-(CR) | SOCKET (CR) | J126 CONNECTOR | M39029/88-488 | 1083 1100 |
| J126-BS | BACKSHELL | J126 CONNECTOR | M85049-31-16N | 1004 1018 |
| J126-BS | BACKSHELL | J126 CONNECTOR | M85049-31-18N | 1019 1082 |
| J126-BS | BACKSHELL | J126 CONNECTOR | M85049/31-16N | 1004 1104 |
| J126-PIN | CONTACT | J126 CONNECTOR | M39029-10-140 | 1004 1082 |
| J126-PIN | CONTACT | J126 CONNECTOR | M39029-10-141 | 1004 1082 |
| J126-PIN | CONTACT | J126 CONNECTOR | M3902910/140 | 1004 1104 |
| J126-PIN | CONTACT | J126 CONNECTOR | M3902910/141 | 1004 1104 |
| J126-SBA | SHRINK BOOT | J126 CONNECTOR | 310HS001Z121-204 | 1083 1100 |
| J127 | RECEPTACLE | W-H L ENG AFT ZONE | D38999/24KG39SN | 1101 1101 |
| J127 | RECEPTACLE | W-H L ENG AFT ZONE | MS3474L16-26S | 1004 1018 |
| J127 | RECEPTACLE | W-H L ENG AFT ZONE | MS3474L18-32P | 1019 1100 |
| J127 | RECEPTACLE | W-H L ENG AFT ZONE | MS3474L18-32P | 1102 1104 |
| J127-(AL) | SOCKET(AL) | J127 CONNECTOR | M39029/88-487 | 1101 1101 |
| J127-(CR) | SOCKET(CR) | J127 CONNECTOR | M39029/88-488 | 1101 1101 |
| J127-BS | BACKSHELL | J127 CONNECTOR | M85049-31-16N | 1004 1018 |

| CODE | NOMENCLATURE | LOCATION | PART NUMBER | EFF. |
|---|---|---|---|---|
| J127-BS | BACKSHELL | J127 CONNECTOR | 310HS001Z121-204 | 1101 1101 |
| J127-BS | BACKSHELL | J127 CONNECTOR | M85049-31-18N | 1019 1100 |
| J127-BS | BACKSHELL | J127 CONNECTOR | M85049/31-16N | 1004 1104 |
| J127-BS | BACKSHELL | J127 CONNECTOR | M85049-31-18N | 1102 1104 |
| J127-PIN | CONTACT | J127 CONNECTOR | M39029-10-141 | 1004 1100 |
| J127-PIN | CONTACT | J127 CONNECTOR | M39029-10-141 | 1102 1104 |
| J127-PIN | CONTACT | J127 CONNECTOR | M39029/10-140 | 1004 1104 |
| J127-PIN | CONTACT | J127 CONNECTOR | M39029/10-141 | 1004 1104 |
| J127-PIN | CONTACT | J127 CONNECTOR | M39029-10-140 | 1004 1100 |
| J127-PIN | CONTACT | J127 CONNECTOR | M39029-10-140 | 1102 1104 |
| J128 | RECEPTACLE | COPILOT CB PNL | MS3474L22-41S | 1004 1104 |
| J128-BS | BACKSHELL | J128 CONNECTOR | M85049-31-22N | 1004 1104 |
| J130 | RECEPTACLE | COPILOT CB PNL | MS3474L20-41S | 1004 1104 |
| J130-BS | BACKSHELL | J130 CONNECTOR | M85049-31-20N | 1004 1104 |
| J131 | RECEPTACLE | PILOT CB PNL | MS3474L22-41S | 1004 1104 |
| J131-BS | BACKSHELL | J131 CONNECTOR | M85049-31-22N | 1004 1104 |
| J131-BS | BACKSHELL | J131 CONNECTOR | M85049/31-22N | 1004 1004 |
| J133 | RECEPTACLE | PILOT CB PNL | MS3474L20-41S | 1004 1104 |
| J133-BS | BACKSHELL | J133 CONNECTOR | M85049-31-20N | 1004 1104 |
| J133-BS | BACKSHELL | J133 CONNECTOR | M85049/31-20N | 1004 1004 |
| J144 | RECEPTACLE | BEFORE FS6000 | MS3474L12-10P | 1004 1100 |
| J144-BS | BACKSHELL | J144 CONNECTOR | M85049-31-12N | 1004 1100 |
| J144-BS | BACKSHELL | J144 CONNECTOR | M85049/31-12N | 1004 1022 |
| J145 | RECEPTACLE | BEFORE FS6000 | MS3474L12-10P | 1004 1100 |
| J145-BS | BACKSHELL | J145 CONNECTOR | M85049-31-12N | 1004 1100 |
| J145-BS | BACKSHELL | J145 CONNECTOR | M85049/31-12N | 1004 1022 |
| J146 | RECEPTACLE | DIMMER CONTROL | MS3474L18-32P | 1004 1104 |
| J149 | RECEPTACLE | L ENG ICE VANE ACTR | MS3474L12-10S | 1004 1104 |
| J149-BS | BACKSHELL | J149 CONNECTOR | M85049-31-12N | 1004 1082 |
| J149-BS | BACKSHELL | J149 CONNECTOR | M85049/31-12N | 1004 1104 |
| J149-LB | LIPPED BOOT | J149 CONNECTOR | 202K142-25 | 1083 1104 |
| J149-SBA | SHRINK BOOT | J149 CONNECTOR | M85049/60-1N12 | 1083 1104 |
| J150 | RECEPTACLE | R ENG ICE VANE ACTR | MS3474L12-10S | 1004 1104 |
| J1501 | RECEPTACLE | ADVISORY LTS | 1-640518-0 | 1004 1104 |
| J1501-SK | SOCKET | J1501 CONNECTOR | 350666-2 | 1004 1104 |
| J1502 | RECEPTACLE | ADVISORY LTS | 1-640518-0 | 1004 1104 |
| J1502-SK | SOCKET | J1502 CONNECTOR | 350666-2 | 1004 1104 |
| J1503 | RECEPTACLE | ADVISORY LTS | 1-640518-0 | 1004 1104 |
| J1503-SK | SOCKET | J1503 CONNECTOR | 350666-2 | 1004 1104 |
| J150-BS | BACKSHELL | J150 CONNECTOR | M85049/31-12N | 1004 1104 |

| CODE | NOMENCLATURE | LOCATION | PART NUMBER | EFF. |
|---|---|---|---|---|
| J150-BS | BACKSHELL | J150 CONNECTOR | M85049-31-12N | 1004 1082 |
| J150-SBA | SHRINK BOOT | J150 CONNECTOR | M85049/60-1N12 | 1083 1104 |
| J1607 | CONNECTOR | ENTRY LIGHT | 1-640518-0 | 1004 1104 |
| J1607-SK | SOCKET | J1607 CONNECTOR | 350666-2 | 1004 1104 |
| J1608 | CONNECTOR | RH CREW LIGHT | 1-640518-0 | 1004 1104 |
| J1608-SK | SOCKET | J1608 CONNECTOR | 350666-2 | 1004 1104 |
| J1609 | CONNECTOR | LH CREW LIGHT | 1-640518-0 | 1004 1104 |
| J1609-SK | SOCKET | J1609 CONNECTOR | 350666-2 | 1004 1104 |
| J161 | RECEPTACLE | NOSE GR WHT | MS3474L16-26S | 1004 1100 |
| J1613 | RECEPTACLE | TOILET | 206430-2 | 1004 1104 |
| J1613-CP | CABLE CLAMP | J1613 CONNECTOR | 206062-3 | 1004 1104 |
| J1613-SK | SOCKET | J1613 CONNECTOR | 66101-1 | 1004 1104 |
| J161-BS | BACKSHELL | J161 CONNECTOR | M85049/31-16N | 1004 1104 |
| J1630 | RECEPTACLE | UTILITY CB PNL | 200512-2 | 1004 1104 |
| J1630-CP | CABLE CLAMP | J1630 CONNECTOR | 201229-1 | 1004 1104 |
| J1630-JSW | JACK SCREW R/B-1 | CONNECTOR J1630 | 200875-2 | 1004 1104 |
| J1630-JW | JACKSCREW | J1630 CONNECTOR | 200874-2 | 1004 1104 |
| J1630-PIN | FEMALE PIN | J1630 CONNECTOR | 66105-3 | 1004 1104 |
| J1630-SK | SOCKET | J1630 CONNECTOR | 66101-1 | 1004 1104 |
| J167 | RECEPTACLE | NOSE GR UP MICROSW | MS3474L10-6SW | 1004 1100 |
| J167-BS | BACKSHELL | J167 CONNECTOR | M85049-31-10N | 1004 1100 |
| J167-BS | BACKSHELL | J167 CONNECTOR | M85049/31-10N | 1004 1015 |
| J168 | RECEPTACLE | NOSE GR DN | MS3474L10-6S | 1004 1100 |
| J168-BS | BACKSHELL | J168 CONNECTOR | M85049-31-10N | 1004 1100 |
| J168-BS | BACKSHELL | J168 CONNECTOR | M85049/31-10N | 1004 1015 |
| J169 | RECEPTACLE | L GR UP MICROSW | MS3474L10-6SW | 1004 1104 |
| J1690 | RECEPTACLE | PLATE CONNECTOR | 200838-2 | 1004 1104 |
| J1690-CP | CABLE CLAMP | J1690 CONNECTOR | 201224-1 | 1004 1104 |
| J1690-JSW | JACK SCREW R/B-1 | CONNECTOR J1690 | 200875-2 | 1004 1104 |
| J1690-JW | JACKSCREW | J1690 CONNECTOR | 200874-2 | 1004 1104 |
| J1690-PIN | FEMALE PIN | J1690 CONNECTOR | 66105-3 | 1004 1104 |
| J1690-SK | SOCKET | J1690 CONNECTOR | 66101-1 | 1004 1104 |
| J169-BS | BACKSHELL | J169 CONNECTOR | M85049-31-10N | 1004 1104 |
| J169-BS | BACKSHELL | J169 CONNECTOR | M85049/31-10N | 1004 1015 |
| J170 | RECEPTACLE | R GR UP MICROSW | MS3474L10-6SW | 1004 1104 |
| J1703 | CONNECTOR | WATER HEATING | 206429-1 | 1034 1104 |
| J1703-CP | CABLE CLAMP | J1703 CONNECTOR | 206062-3 | 1034 1104 |
| J1703-PIN | PIN | J1703 CONNECTOR | 66103-1 | 1034 1104 |

| CODE | NOMENCLATURE | LOCATION | PART NUMBER | EFF. |
|---|---|---|---|---|
| J170-BS | BACKSHELL | J170 CONNECTOR | M85049-31-10N | 1004 1104 |
| J170-BS | BACKSHELL | J170 CONNECTOR | M85049/31-10N | 1004 1015 |
| J171 | RECEPTACLE | L GR DN MICROSW | MS3474L10-6S | 1004 1104 |
| J171-BS | BACKSHELL | J171 CONNECTOR | M85049-31-10N | 1004 1104 |
| J171-BS | BACKSHELL | J171 CONNECTOR | M85049/31-10N | 1004 1015 |
| J172 | RECEPTACLE | R GR DN MICROSW | MS3474L10-6S | 1004 1104 |
| J172-BS | BACKSHELL | J172 CONNECTOR | M85049-31-10N | 1004 1104 |
| J172-BS | BACKSHELL | J172 CONNECTOR | M85049/31-10N | 1004 1015 |
| J173 | RECEPTACLE | L GR WEIGHT | MS3474L14-19S | 1026 1100 |
| J173 | RECEPTACLE | L GR WEIGHT | MS3474L12-10S | 1004 1025 |
| J173-BS | BACKSHELL | J173 CONNECTOR | M85049/31-12N | 1004 1104 |
| J174 | RECEPTACLE | R GR WEIGHT | MS3474L12-10S | 1004 1025 |
| J174 | RECEPTACLE | R GR WEIGHT | MS3474L14-19S | 1026 1100 |
| J1744 | RECEPTACLE | INTERF PNL 3 RIGHT | 206043-1 | 1004 1104 |
| J1744-CP | CABLE CLAMP | J1744 CONNECTOR | 206070-1 | 1004 1104 |
| J1744-PIN | FEMALE PIN | J1744 CONNECTOR | 66105-3 | 1004 1104 |
| J1745 | RECEPTACLE | INTERF PNL 3 LEFT | 206043-1 | 1004 1104 |
| J1745-CP | CABLE CLAMP | J1745 CONNECTOR | 206070-1 | 1004 1104 |
| J1745-PIN | FEMALE PIN | J1745 CONNECTOR | 66105-3 | 1004 1104 |
| J174-BS | BACKSHELL | J174 CONNECTOR | M85049-31-14N | 1026 1100 |
| J174-BS | BACKSHELL | J174 CONNECTOR | M85049-31-12N | 1026 1104 |
| J174-BS | BACKSHELL | J174 CONNECTOR | M85049/31-12N | 1004 1104 |
| J179 | RECEPTACLE | L FWD FLAP ACTR | MS3470L14-19S | 1004 1104 |
| J179-BS | BACKSHELL | J179 CONNECTOR | M85049/31-14N | 1004 1007 |
| J179-BS | BACKSHELL | J179 CONNECTOR | M85049-31-14N | 1004 1104 |
| J180 | RECEPTACLE | R FWD FLAP ACTR | MS3470L14-19S | 1004 1104 |
| J1800 | RECEPTACLE | INTERF PSU RIGHT | 200512-2 | 1004 1104 |
| J1800-CP | CABLE CLAMP | J1800 CONNECTOR | 201229-1 | 1004 1104 |
| J1800-JSW | JACK SCREW R/B-1 | CONNECTOR J1800 | 200875-2 | 1004 1104 |
| J1800-JW | JACKSCREW | J1800 CONNECTOR | 200874-2 | 1004 1104 |
| J1800-PIN | FEMALE PIN | J1800 CONNECTOR | 66105-3 | 1004 1104 |
| J1800-SK | SOCKET | J1800 CONNECTOR | 66101-1 | 1004 1104 |
| J1801 | RECEPTACLE | INTERF PSU LEFT | 200512-2 | 1004 1104 |
| J1801-CP | CABLE CLAMP | J1801 CONNECTOR | 201229-1 | 1004 1104 |
| J1801-JSW | JACK SCREW R/B-1 | CONNECTOR J1801 | 200875-2 | 1004 1104 |
| J1801-JW | JACKSCREW | J1801 CONNECTOR | 200874-2 | 1004 1104 |
| J1801-PIN | FEMALE PIN | J1801 CONNECTOR | 66105-3 | 1004 1104 |

| CODE | NOMENCLATURE | LOCATION | PART NUMBER | EFF. |
|---|---|---|---|---|
| J1801-SK | SOCKET | J1801 CONNECTOR | 66101-1 | 1004 1104 |
| J180-BS | BACKSHELL | J180 CONNECTOR | M85049-31-14N | 1004 1104 |
| J180-BS | BACKSHELL | J180 CONNECTOR | M85049/31-14N | 1004 1007 |
| J1821 | RECEPTACLE | INTERF PNL 1 RIGHT | 206043-1 | 1004 1104 |
| J1821-CP | CABLE CLAMP | J1821 CONNECTOR | 206070-1 | 1004 1104 |
| J1821-PIN | FEMALE PIN | J1821 CONNECTOR | 66105-3 | 1004 1104 |
| J1831 | RECEPTACLE | INTERF PNL DIVAN L | 206043-1 | 1004 1104 |
| J1831-CP | CABLE CLAMP | J1831 CONNECTOR | 206070-1 | 1004 1104 |
| J1831-PIN | FEMALE PIN | J1831 CONNECTOR | 66105-3 | 1004 1104 |
| J1841 | RECEPTACLE | INTERF PNL DIVAN R | 206043-1 | 1004 1104 |
| J1841-CP | CABLE CLAMP | J1841 CONNECTOR | 206070-1 | 1004 1104 |
| J1841-PIN | FEMALE PIN | J1841 CONNECTOR | 66105-3 | 1004 1104 |
| J1851 | RECEPTACLE | INTERF PNL 3 LEFT | 206043-1 | 1004 1104 |
| J1851-CP | CABLE CLAMP | J1851 CONNECTOR | 206070-1 | 1004 1104 |
| J1851-PIN | FEMALE PIN | J1851 CONNECTOR | 66105-3 | 1004 1104 |
| J1861 | RECEPTACLE | INTERF PNL 4 RIGHT | 206043-1 | 1004 1104 |
| J1861-CP | CABLE CLAMP | J1861 CONNECTOR | 206070-1 | 1004 1104 |
| J1861-PIN | FEMALE PIN | J1861 CONNECTOR | 66105-3 | 1004 1104 |
| J1871 | RECEPTACLE | INTERF PNL 2 LEFT | 206043-1 | 1004 1104 |
| J1871-CP | CABLE CLAMP | J1871 CONNECTOR | 206070-1 | 1004 1104 |
| J1871-PIN | FEMALE PIN | J1871 CONNECTOR | 66105-3 | 1004 1104 |
| J1881 | RECEPTACLE | INTERF PNL 2 RIGHT | 206043-1 | 1004 1104 |
| J1881-CP | CABLE CLAMP | J1881 CONNECTOR | 206070-1 | 1004 1104 |
| J1881-PIN | FEMALE PIN | J1881 CONNECTOR | 66105-3 | 1004 1104 |
| J1891 | RECEPTACLE | INTERF PNL 1 LEFT | 206043-1 | 1004 1104 |
| J1891-CP | CABLE CLAMP | J1891 CONNECTOR | 206070-1 | 1004 1104 |
| J1891-PIN | FEMALE PIN | J1891 CONNECTOR | 66105-3 | 1004 1104 |
| J1901 | RECEPTACLE | INTERF PNL 3 RIGHT | 206043-1 | 1004 1104 |
| J1901-CP | CABLE CLAMP | J1901 CONNECTOR | 206070-1 | 1004 1104 |
| J1901-PIN | FEMALE PIN | J1901 CONNECTOR | 66105-3 | 1004 1104 |
| J1911 | RECEPTACLE | INTERF PNL 4 LEFT | 206043-1 | 1004 1104 |
| J1911-CP | CABLE CLAMP | J1911 CONNECTOR | 206070-1 | 1004 1104 |
| J1911-PIN | FEMALE PIN | J1911 CONNECTOR | 66105-3 | 1004 1104 |

| CODE | NOMENCLATURE | LOCATION | PART NUMBER | EFF. |
|---|---|---|---|---|
| J1914 | RECEPTACLE | INTERF GALLEY | 206043-1 | 1004 1104 |
| J1914-CP | CABLE CLAMP | J1914 CONNECTOR | 206070-1 | 1004 1104 |
| J1914-PIN | FEMALE PIN | J1914 CONNECTOR | 66105-3 | 1004 1104 |
| J1914-SK | SOCKET | J1914 CONNECTOR | 66101-1 | 1004 1104 |
| J1921 | RECEPTACLE | INTERF PNL VANITY | 206043-1 | 1004 1104 |
| J1921-CP | CABLE CLAMP | J1921 CONNECTOR | 206070-1 | 1004 1104 |
| J1921-PIN | FEMALE PIN | J1921 CONNECTOR | 66105-3 | 1004 1104 |
| J1924 | RECEPTACLE | INTERF ARMREST | 206043-1 | 1004 1104 |
| J1924-CP | CABLE CLAMP | J1924 CONNECTOR | 206070-1 | 1004 1104 |
| J1924-PIN | FEMALE PIN | J1924 CONNECTOR | 66105-3 | 1004 1104 |
| J1925 | RECEPTACLE | INTERF ARMREST | 206043-1 | 1004 1104 |
| J1925-CP | CABLE CLAMP | J1925 CONNECTOR | 206070-1 | 1004 1104 |
| J1925-PIN | FEMALE PIN | J1925 CONNECTOR | 66105-3 | 1004 1104 |
| J1931 | RECEPTACLE | GALLEY | 206430-2 | 1037 1104 |
| J1931 | RECEPTACLE | INTERF GALLEY | 206043-1 | 1004 1104 |
| J1931-CP | CABLE CLAMP | J1931 CONNECTOR | 206062-3 | 1037 1104 |
| J1931-CP | CABLE CLAMP | J1931 CONNECTOR | 206070-1 | 1004 1104 |
| J1931-PIN | FEMALE PIN | J1931 CONNECTOR | 66105-3 | 1004 1104 |
| J1931-SK | SOCKET | J1931 CONNECTOR | 66101-1 | 1004 1104 |
| J1977 | CONNECTOR | CABIN LTS | 350866-1 | 1004 1104 |
| J1977-PIN | CONTACT | J1977 CONNECTOR | 350689-3 | 1004 1104 |
| J1977-SLV | SLEEVE | J1977 CONNECTOR | 3185-33 | 1004 1104 |
| J1978 | CONNECTOR | CABIN LTS | 350866-1 | 1004 1104 |
| J1978-PIN | CONTACT | J1978 CONNECTOR | 350689-3 | 1004 1104 |
| J1978-SLV | SLEEVE | J1978 CONNECTOR | 3185-33 | 1004 1104 |
| J1979 | CONNECTOR | CABIN LTS | 350866-1 | 1004 1104 |
| J1979-PIN | CONTACT | J1979 CONNECTOR | 350689-3 | 1004 1104 |
| J1979-SLV | SLEEVE | J1979 CONNECTOR | 3185-33 | 1004 1104 |
| J1980 | CONNECTOR | CABIN LTS | 350866-1 | 1004 1104 |
| J1980-PIN | CONTACT | J1980 CONNECTOR | 350689-3 | 1004 1104 |
| J1980-SLV | SLEEVE | J1980 CONNECTOR | 3185-33 | 1004 1104 |
| J1981 | CONNECTOR | CABIN LTS | 350866-1 | 1004 1104 |
| J1981-PIN | CONTACT | J1981 CONNECTOR | 350689-3 | 1004 1104 |
| J1981-SLV | SLEEVE | J1981 CONNECTOR | 3185-33 | 1004 1104 |
| J1982 | CONNECTOR | CABIN LTS | 350866-1 | 1004 1104 |
| J1982-PIN | CONTACT | J198 CONNECTOR | 350689-3 | 1004 1104 |

| CODE | NOMENCLATURE | LOCATION | PART NUMBER | EFF. |
|---|---|---|---|---|
| J1982-SLV | SLEEVE | J1982 CONNECTOR | 3185-33 | 1004 1104 |
| J1983 | CONNECTOR | VANITY LTS | 350866-1 | 1004 1104 |
| J1983-PIN | CONTACT | J1983 CONNECTOR | 350689-3 | 1004 1104 |
| J1983-SLV | SLEEVE | J1983 CONNECTOR | 3185-33 | 1004 1104 |
| J1984 | CONNECTOR | LAVATORY LTS | 350866-1 | 1004 1104 |
| J1984-PIN | CONTACT | J1984 CONNECTOR | 350689-3 | 1004 1104 |
| J1984-SLV | SLEEVE | J1984 CONNECTOR | 3185-33 | 1004 1104 |
| J1992 | CONNECTOR | LAVATORY LTS | 350866-1 | 1004 1104 |
| J1992-PIN | CONTACT | J1992 CONNECTOR | 350689-3 | 1004 1104 |
| J1992-SLV | SLEEVE | J1992 CONNECTOR | 3185-33 | 1004 1104 |
| J1993 | CONNECTOR | LAVATORY LTS | 350866-1 | 1004 1104 |
| J1993-PIN | CONTACT | J199 CONNECTOR | 350689-3 | 1004 1104 |
| J1993-SLV | SLEEVE | J1993 CONNECTOR | 3185-33 | 1004 1104 |
| J202 | RECEPTACLE | R FWD PRESS BHD | MS3474L20-39S | 1004 1100 |
| J202-BS | BACKSHELL | J202 CONNECTOR | M85049/31-20N | 1004 1104 |
| J203 | RECEPTACLE | L FWD PRESS BHD | MS3474L20-39S | 1004 1100 |
| J203-BS | BACKSHELL | J203 CONNECTOR | M85049/31-20N | 1004 1104 |
| J203-BS | BACKSHELL | J203 CONNECTOR | M85049/31-12N | 1004 1104 |
| J207 | RECEPTACLE | TRIM SWITCH PNL | MS3122E16-26S | 1004 1104 |
| J222 | RECEPTACLE | ENGINE CTRL PNL | MS3122E16-26P | 1004 1104 |
| J240 | RECEPTACLE | R PWR STRETCHER | MS3100R20-23S | 1004 1104 |
| J241 | RECEPTACLE | L PWR STRETCHER | MS3100R20-23S | 1004 1104 |
| J243 | RECEPTACLE | AUX 3 | MS3100R20-23S | 1004 1104 |
| J26 | RECEPTACLE | MAIN JUNCTION BOX | MS3474L22.41PW | 1004 1104 |
| J263 | RECEPTACLE | GLARESHIELD | MS3474L14-19P | 1004 1104 |
| J263-BS | BACKSHELL | J263 CONNECTOR | M85049-31-14N | 1004 1104 |
| J263-BS | BACKSHELL | J263 CONNECTOR | M85049/31-14N | 1004 1104 |
| J267 | RECEPTACLE | FWD FIREWALL | D38999/24KC98SN | 1101 1101 |
| J267 | RECEPTACLE | FWD FIREWALL | MS3474L12-10S | 1102 1104 |
| J267 | RECEPTACLE | FWD FIREWALL | MS3474L12-10S | 1004 1100 |
| J267-BS | BACKSHELL | J267 CONNECTOR | M85049/31-12N | 1004 1104 |
| J267-BS | BACKSHELL | J267 CONNECTOR | 310HS001Z113-204 | 1101 1101 |
| J267-BS | BACKSHELL | J267 CONNECTOR | M85049-31-12N | 1004 1100 |
| J267-BS | BACKSHELL | J267 CONNECTOR | M85049-31-12N | 1102 1104 |
| J267-LB | LIPPED BOOT | J267 CONNECTOR | 222K142-25 | 1101 1101 |
| J26-BS | BACKSHELL | J26 CONNECTOR | M85049/31-22N | 1004 1009 |

| CODE | NOMENCLATURE | LOCATION | PART NUMBER | EFF. |
|---|---|---|---|---|
| J26-BS | BACKSHELL | J26 CONNECTOR | M85049-31-22N | 1004 1104 |
| J27 | RECEPTACLE | BEFORE FS6000 | MS3474L24-61P | 1004 1100 |
| J271 | RECEPTACLE | COCKPIT (LH) | MS3474L14-18P | 1041 1044 |
| J271 | RECEPTACLE | COCKPIT (LH) | MS3474L14-18P | 1046 1104 |
| J271 | RECEPTACLE | COCKPIT (LH) | MS3474L12-10P | 1004 1040 |
| J271 | RECEPTACLE | COCKPIT (LH) | MS3474L12-10P | 1045 1045 |
| J271-BS | BACKSHELL | J271 CONNECTOR | M85049-31-14N | 1041 1044 |
| J271-BS | BACKSHELL | J271 CONNECTOR | M85049-31-12N | 1004 1040 |
| J271-BS | BACKSHELL | J271 CONNECTOR | M85049-31-12N | 1045 1045 |
| J271-BS | BACKSHELL | J271 CONNECTOR | M85049/31-12N | 1004 1104 |
| J271-BS | BACKSHELL | J271 CONNECTOR | M85049-31-14N | 1046 1104 |
| J279 | RECEPTACLE | A/I MONITOR UNIT | MS3112E14-18P | 1004 1104 |
| J27-BS | BACKSHELL | J27 CONNECTOR | M85049/31-24N | 1004 1104 |
| J27-BS | BACKSHELL | J27 CONNECTOR | M85049-31-24N | 1004 1100 |
| J27-PIN | CONTACT | J27 CONNECTOR | M39029/9-135 | 1004 1104 |
| J27-PIN | CONTACT | J27 CONNECTOR | M39029/9-134 | 1004 1104 |
| J27-PIN | CONTACT | J27 CONNECTOR | M39029-9-134 | 1004 1100 |
| J28 | RECEPTACLE | BEFORE FS6000 | MS3474L24-61P | 1004 1100 |
| J280 | RECEPTACLE | ANTI-SKID CTRL PNL | MS3474L12-10P | 1004 1104 |
| J280-BS | BACKSHELL | J280 CONNECTOR | M85049-31-12N | 1004 1104 |
| J285 | CONNECTOR | CKPT HEATER | MS3474L14-9S | 1010 1104 |
| J285-BS | BACKSHELL | J285 CONNECTOR | M85049-31-14N | 1010 1104 |
| J28-BS | BACKSHELL | J28 CONNECTOR | M85049-31-24N | 1004 1100 |
| J28-BS | BACKSHELL | J28 CONNECTOR | M85049/31-24N | 1004 1104 |
| J28-PIN | CONTACT | J28 CONNECTOR | M39029/9-135 | 1004 1104 |
| J28-PIN | CONTACT | J28 CONNECTOR | M39029-9-134 | 1004 1100 |
| J28-PIN | CONTACT | J28- CONNECTOR | M39029-9-135 | 1004 1100 |
| J28-PIN | CONTACT | J28 CONNECTOR | M39029/9-134 | 1004 1104 |
| J29 | RECEPTACLE | BEFORE FS6000 | MS3474L22-41P | 1004 1100 |
| J296 | RECEPTACLE | MAGNETIC COMPASS | 1-640518-0 | 1023 1104 |
| J296-PIN | CONTACT | J296 CONNECTOR | 350666-2 | 1023 1104 |
| J297 | RECEPTACLE | TOP ANTI-COLLISION | MS3474L12-10S | 1034 1104 |
| J297-BS | BACKSHELL | J297 CONNECTOR | M85049-31-12N | 1034 1104 |
| J29-BS | BACKSHELL | J29 CONNECTOR | M85049/31-22N | 1004 1104 |
| J29-BS | BACKSHELL | J29 CONNECTOR | M85049-31-22N | 1004 1100 |
| J30 | RECEPTACLE | BEFORE FS6000 | MS3474L22-41P | 1004 1100 |
| J30-BS | BACKSHELL | J30 CONNECTOR | M85049-31-22N | 1004 1100 |
| J30-BS | BACKSHELL | J30 CONNECTOR | M85049/31-22N | 1004 1104 |
| J31 | RECEPTACLE | BEFORE FS6000 | MS3474L22-41PW | 1004 1100 |

| CODE | NOMENCLATURE | LOCATION | PART NUMBER | EFF. |
|---|---|---|---|---|
| J310 | RECEPTACLE | AUXILIARY 1 | 206430-2 | 1004 1104 |
| J310-CP | CABLE CLAMP | J310 CONNECTOR | 206062-3 | 1004 1104 |
| J310-SK | SOCKET | J310 CONNECTOR | 66101-1 | 1004 1104 |
| J312 | RECEPTACLE | AUXILIARY 1 | 986352804 | 1004 1104 |
| J313 | RECEPTACLE | AUXILIARY 1 | 986352804 | 1004 1104 |
| J315 | RECEPTACLE | AUXILIARY 1 | 206430-2 | 1004 1104 |
| J315-CP | CABLE CLAMP | J315 CONNECTOR | 206062-3 | 1004 1104 |
| J315-SK | SOCKET | J315 CONNECTOR | 66101-1 | 1004 1104 |
| J31-BS | BACKSHELL | J31 CONNECTOR | M85049-31-22N | 1004 1100 |
| J31-BS | BACKSHELL | J31 CONNECTOR | M85049/31-22N | 1004 1104 |
| J32 | RECEPTACLE | BEFORE FS6000 | MS3454L20-14P | 1004 1104 |
| J32-BS | BACKSHELL | J32 CONNECTOR | MS3416-20EN | 1004 1104 |
| J33 | RECEPTACLE | BEFORE FS6000 | MS3454L20-14P | 1004 1100 |
| J33-BS | BACKSHELL | J33 CONNECTOR | MS3416-20EN | 1004 1100 |
| J34 | RECEPTACLE | BEFORE FS6000 | MS3474L22-41PW | 1004 1100 |
| J34-BS | BACKSHELL | J34 CONNECTOR | M85049-31-22N | 1004 1100 |
| J35 | RECEPTACLE | BEFORE FS6000 | MS3474L20-41P | 1004 1104 |
| J35-BS | BACKSHELL | J35 CONNECTOR | M85049-31-20N | 1004 1104 |
| J35-BS | BACKSHELL | J35 CONNECTOR | M85049/31-20N | 1004 1104 |
| J36 | RECEPTACLE | BEFORE FS6000 | MS3474L20-41P | 1004 1100 |
| J36-BS | BACKSHELL | J36 CONNECTOR | M85049/31-20N | 1004 1007 |
| J36-BS | BACKSHELL | J36 CONNECTOR | M85049-31-20N | 1004 1100 |
| J37 | RECEPTACLE | MAIN JUNCTION BOX | MS3474L22-41P | 1004 1104 |
| J37-BS | BACKSHELL | J37 CONNECTOR | M85049-31-22N | 1004 1104 |
| J37-BS | BACKSHELL | J37 CONNECTOR | M85049/31-22N | 1004 1009 |
| J49 | CONNECTOR | CABIN TEMP SENSOR | 205838-1 | 1004 1104 |
| J49-BS | BACKSHELL | J49 CONNECTOR | 206062-1 | 1004 1104 |
| J49-PIN | CONTACT | J49 CONNECTOR | 205090-1 | 1004 1104 |
| J601 | RECEPTACLE | FWD PRESS BHD | MS3474L14-19P | 1004 1104 |
| J601-BS | BACKSHELL | J601 CONNECTOR | M85049-31-14N | 1004 1104 |
| J601-BS | BACKSHELL | J601 CONNECTOR | M85049/31-14N | 1004 1022 |
| J602 | RECEPTACLE | FWD PRESS BHD | MS3474L14-19P | 1004 1104 |
| J602-BS | BACKSHELL | J602 CONNECTOR | M85049-31-14N | 1004 1104 |
| J602-BS | BACKSHELL | J602 CONNECTOR | M85049/31-14N | 1004 1104 |
| J603 | RECEPTACLE | FWD PRESS BHD | MS27474E22F35SB | 1004 1104 |
| J603-BS | BACKSHELL | J603 CONNECTOR | M85049/27-22N | 1004 1022 |
| J603-BS | BACKSHELL | J603 CONNECTOR | M85049-27-22N | 1004 1104 |
| J604 | RECEPTACLE | FWD PRESS BHD | MS27474E22F35SB | 1004 1104 |
| J604-BS | BACKSHELL | J604 CONNECTOR | M85049/27-22N | 1004 1104 |
| J604-BS | BACKSHELL | J604 CONNECTOR | M85049-27-22N | 1004 1104 |

| CODE | NOMENCLATURE | LOCATION | PART NUMBER | EFF. |
|---|---|---|---|---|
| J605 | RECEPTACLE | FWD PRESS BHD | MS27474E22F35SB | 1004 1104 |
| J605-BS | BACKSHELL | J605 CONNECTOR | M85049-27-22N | 1004 1104 |
| J605-BS | BACKSHELL | J605 CONNECTOR | M85049/27-22N | 1004 1104 |
| J606 | RECEPTACLE | FWD PRESS BHD | MS27474E22F35SB | 1004 1104 |
| J606-BS | BACKSHELL | J606 CONNECTOR | M85049-27-22N | 1004 1104 |
| J607 | RECEPTACLE | FWD PRESS BHD | MS3474L14-19P | 1004 1104 |
| J607-BS | BACKSHELL | J607 CONNECTOR | M85049/31-14N | 1004 1018 |
| J607-BS | BACKSHELL | J607 CONNECTOR | M85049-31-14N | 1004 1104 |
| J608 | RECEPTACLE | FWD PRESS BHD | MS3474L14-19P | 1004 1104 |
| J608-BS | BACKSHELL | J608 CONNECTOR | M85049-31-14N | 1004 1104 |
| J608-BS | BACKSHELL | J608 CONNECTOR | M85049/31-14N | 1004 1018 |
| J609 | RECEPTACLE | FWD PRESS BHD | MS3474L24-61P | 1004 1104 |
| J609-BS | BACKSHELL | J609 CONNECTOR | M85049-31-24N | 1004 1104 |
| J611 | RECEPTACLE | PILOT CB PNL | MS3474L22-41SW | 1004 1104 |
| J611-BS | BACKSHELL | J611 CONNECTOR | M85049/31-22N | 1004 1004 |
| J611-BS | BACKSHELL | J611 CONNECTOR | M85049-31-22N | 1004 1104 |
| J612 | RECEPTACLE | COPILOT CB PNL | MS3474L22-41SW | 1004 1104 |
| J612-BS | BACKSHELL | J612 CONNECTOR | M85049-31-22N | 1004 1104 |
| J615 | RECEPTACLE | FWD PRESS BHD | JT07RE16-13S023 | 1004 1104 |
| J620 | RECEPTACLE | COCKPIT(RH) | MS3474L12-10P | 1004 1104 |
| J620-BS | BACKSHELL | J620 CONNECTOR | M85049-31-12N | 1004 1104 |
| J663 | RECEPTACLE | BIAS BOX | MS3112E20-41P | 1004 1099 |
| J663 | RECEPTACLE | BIAS BOX | MS3470L20-41P | 1100 1104 |
| J664 | RECEPTACLE | BIAS BOX | MS3112E20-41P | 1004 1099 |
| J664 | RECEPTACLE | BIAS BOX | MS3470L20-41P | 1100 1104 |
| J665 | RECEPTACLE | BIAS BOX | MS3112E16-26P | 1004 1099 |
| J665 | RECEPTACLE | BIAS BOX | MS3470L16-26P | 1100 1104 |
| J689 | RECEPTACLE | PILOT PHONE | PJB430 | 1004 1104 |
| J697 | RECEPTACLE | HAND MIC JACK | PJT430 | 1004 1104 |
| J697-GD | GUARD | J697 CONNECTOR | PJ400T18-1 | 1004 1104 |
| J697-GD | GUARD | J697 CONNECTOR | PJ400T18/1 | 1004 1018 |
| J7 | RECEPTACLE | MAIN JUNCTION BOX | MS3474L16-23P | 1004 1104 |
| J702 | RECEPTACLE | HAND MIC JACK | PJT430 | 1004 1104 |
| J702-GD | GUARD | J702 CONNECTOR | PJ400T18-1 | 1004 1104 |
| J702-GD | GUARD | J702 CONNECTOR | PJ400T18/1 | 1004 1018 |
| J708 | RECEPTACLE | COPILOT PHONE | PJB430 | 1004 1104 |
| J709 | RECEPTACLE | PILOT MIC | PJT430 | 1004 1104 |
| J710 | RECEPTACLE | COPILOT MIC | PJT430 | 1004 1104 |
| J711 | RECEPTACLE | OXY MIC PILOT | PJT430 | 1004 1104 |
| J712 | RECEPTACLE | OXY MIC COPILOT | PJT430 | 1004 1104 |

| CODE | NOMENCLATURE | LOCATION | PART NUMBER | EFF. |
|---|---|---|---|---|
| J717 | RECEPTACLE | PHONE/MIC PNL PLT | MS3474L12-10P | 1004 1104 |
| J717-BS | BACKSHELL | J717 CONNECTOR | M85049-31-12N | 1004 1104 |
| J717-BS | BACKSHELL | J717 CONNECTOR | M85049/31-12N | 1004 1018 |
| J718 | RECEPTACLE | PHONE/MIC PNL CPLT | MS3474L12-10P | 1004 1104 |
| J718-BS | BACKSHELL | J718 CONNECTOR | M85049-31-12N | 1004 1104 |
| J718-BS | BACKSHELL | J718 CONNECTOR | M85049/31-12N | 1004 1018 |
| J721 | RECEPTACLE | TRIM SWITCH PNL | MS3122E14-19P | 1004 1104 |
| J722 | RECEPTACLE | AVCS CTRL COLUMN | MS3474L14-18P | 1004 1104 |
| J722-BS | BACKSHELL | J722 CONNECTOR | M85049/31-14N | 1019 1104 |
| J722-BS | BACKSHELL | J722 CONNECTOR | M85049-31-14N | 1004 1104 |
| J722-BS | BACKSHELL | J722 CONNECTOR | M85049/31-14N | 1004 1018 |
| J755 | CONNECTOR | LRN/OMEGA | 205210-1 | 1004 1104 |
| J755-HD | HOOD | J755 CONNECTOR | MD-37-000-J | 1004 1104 |
| J755-HD | HOOD | J755 CONNECTOR | MD37-000J | 1004 1104 |
| J755-LT | LOCKING TAB | J755 CONNECTOR | MD15-000-0V3 | 1004 1104 |
| J755-PIN | PIN | J755 CONNECTOR | 205089-1 | 1004 1104 |
| J755-SLT | SLIDE LOCK TAB | J755 CONNECTOR | MD-15-000-0-V3 | 1004 1104 |
| J79 | RECEPTACLE | PILOT SWITCH PNL | MS3474L24-61P | 1004 1104 |
| J79-BS | BACKSHELL | J79 CONNECTOR | M85049-31-24N | 1004 1104 |
| J79-BS | BACKSHELL | J79 CONNECTOR | M85049/31-24N | 1004 1015 |
| J7-BS | BACKSHELL | J7-B CONNECTOR | M85049-31-16N | 1004 1104 |
| J7-BS | BACKSHELL | J7-B CONNECTOR | M85049/31-16N | 1004 1009 |
| J80 | RECEPTACLE | PILOT SWITCH PNL | MS27474T24B4PC | 1004 1104 |
| J805 | COAX CONNECTOR | FWD PRESS BHD | M39012/19B0003 | 1058 1104 |
| J805 | COAX CONNECTOR | FWD PRESS BHD | M39012-19-0003 | 1004 1057 |
| J805-IB | INSULATING BUSHING | J805 CONNECTOR | 330620 | 1004 1104 |
| J806 | COAX CONNECTOR | FWD PRESS BHD | M39012/19B0003 | 1058 1104 |
| J806 | COAX CONNECTOR | FWD PRESS BHD | M39012-19-0003 | 1004 1057 |
| J806-IB | INSULATING BUSHING | J806 CONNECTOR | 330620 | 1004 1104 |
| J807 | COAX CONNECTOR | FWD PRESS BHD | M39012/19B0003 | 1058 1104 |
| J807 | COAX CONNECTOR | FWD PRESS BHD | M39012-19-0003 | 1004 1057 |
| J807-IB | INSULATING BUSHING | J807 CONNECTOR | 330620 | 1004 1104 |
| J808 | COAX CONNECTOR | FWD PRESS BHD | M39012/19B0003 | 1058 1104 |
| J808 | COAX CONNECTOR | FWD PRESS BHD | M39012-19-0003 | 1004 1057 |
| J808-IB | INSULATING BUSHING | J808 CONNECTOR | 330620 | 1004 1104 |
| J80-BS | BACKSHELL | J80 CONNECTOR | M85049-27-24N | 1004 1104 |
| J80-BS | BACKSHELL | J80 CONNECTOR | M85049/27-24N | 1004 1015 |

| CODE | NOMENCLATURE | LOCATION | PART NUMBER | EFF. |
|---|---|---|---|---|
| J81 | RECEPTACLE | FUEL CONTROL PNL | MS3474L22-41P | 1004 1104 |
| J816 | COAX CONNECTOR | AFT PRESS BHD | M39012/19B0003 | 1058 1104 |
| J816 | COAX CONNECTOR | AFT PRESS BHD | M39012-19-0003 | 1004 1057 |
| J816-IB | INSULATING BUSHING | J816 CONNECTOR | 330620 | 1004 1104 |
| J818 | COAX CONNECTOR | AFT PRESS BHD | M39012-19-0003 | 1004 1057 |
| J818 | COAX CONNECTOR | AFT PRESS BHD | M39012/19B0003 | 1058 1104 |
| J818-IB | INSULATING BUSHING | J818 CONNECTOR | 330620 | 1004 1104 |
| J81-BS | BACKSHELL | J81 CONNECTOR | M85049-31-22N | 1004 1104 |
| J81-BS | BACKSHELL | J81 CONNECTOR | M85049/31-22N | 1016 1104 |
| J82 | RECEPTACLE | FUEL CONTROL PNL | MS3474L22.41PW | 1004 1104 |
| J82-BS | BACKSHELL | J82 CONNECTOR | M85049/31-22N | 1016 1104 |
| J82-BS | BACKSHELL | J82 CONNECTOR | M85049-31-22N | 1004 1104 |
| J837 | ADAPTER | XPNDR2 SIGNAL | UG274U | 1004 1104 |
| J846 | ADAPTER | DME2 SIGNAL | UG274U | 1004 1104 |
| J911 | RECEPTACLE | EFIS PNL | MS3112E16-26P | 1004 1104 |
| J918 | RECEPTACLE | FWD PRESS BHD | MS27474E16F35S | 1004 1104 |
| J918-BS | BACKSHELL | J918 CONNECTOR | M85049/27-16N | 1004 1104 |
| J918-BS | BACKSHELL | J918 CONNECTOR | M85049-27-16N | 1004 1104 |
| J924 | RECEPTACLE | FWD PRESS BHD | MS3474L20-39S | 1004 1104 |
| J924-BS | BACKSHELL | J924 CONNECTOR | M85049/31-20N | 1004 1104 |
| J924-BS | BACKSHELL | J924 CONNECTOR | M85049-31-20N | 1004 1104 |
| J926 | RECEPTACLE | FREON | MS3100R32-9P | 1004 1104 |
| J928 | RECEPTACLE | VOICE RECORDER | MS3474L20-39S | 1004 1104 |
| J928-BS | BACKSHELL | J928 CONNECTOR | M85049/31-20N | 1004 1104 |
| J933 | RECEPTACLE | AUDIO SELECT PNL | 205161-1 | 1019 1104 |
| J933-HD | HOOD | J933 CONNECTOR | MD9-000J | 1019 1104 |
| J933-LT | LOCKING TAB | J933 CONNECTOR | MD15-000-0V3 | 1019 1104 |
| J933-PIN | CONTACT | J933 CONNECTOR | 205090-1 | 1019 1104 |
| J936 | CONNECTOR | R COCKPIT SPKR | 1-640518-0 | 1019 1104 |
| J936-SK | SOCKET | J936 CONNECTOR | 350666-2 | 1019 1104 |
| J937 | CONNECTOR | L COCKPIT SPKR | 1-640518-0 | 1019 1104 |
| J937-SK | SOCKET | J937 CONNECTOR | 350666-2 | 1019 1104 |
| J948 | RECEPTACLE | DTU | 1324 | 1004 1104 |
| J968 | RECEPTACLE | COCKPIT(RH) CAT2 | DAMA15P | 1004 1104 |
| J968-HD | HOOD | J968 CONNECTOR | D15-000KVL | 1004 1104 |
| J968-LT | LOCKING TAB | J968 CONNECTOR | MD15-000-0V3 | 1004 1104 |
| J969 | RECEPTACLE | COCKPIT(LH) CAT2 | DAMA15P | 1004 1104 |
| J969-HD | HOOD | J969 CONNECTOR | D15-000KVL | 1004 1104 |
| J969-LT | LOCKING TAB | J969 CONNECTOR | MD15-000-0V3 | 1004 1104 |

| CODE | NOMENCLATURE | LOCATION | PART NUMBER | EFF. |
|---|---|---|---|---|
| J982 | RECEPTACLE | INTERF VIDEO SYS | 206043-1 | 1004 1104 |
| J982-CP | CABLE CLAMP | J982 CONNECTOR | 206070-1 | 1004 1104 |
| J982-PIN | PIN | J982 CONNECTOR | 66103-1 | 1004 1104 |
| J999 | RECEPTACLE | INTERF VIDEO SYS | 206043-1 | 1004 1104 |
| J999-CP | CABLE CLAMP | J999 CONNECTOR | 206070-1 | 1004 1104 |
| J999-PIN | FEMALE PIN | J999 CONNECTOR | 66105-3 | 1004 1104 |
| P1 | CONNECTOR | L GENERATOR | MS3116F8-3S | 1004 1104 |
| P10 | CONNECTOR | MAIN JUNCTION BOX | MS3476L16-23SW | 1004 1104 |
| P100 | CONNECTOR | CENTER SWITCH PNL | MS3476L24-61S | 1004 1104 |
| P1000 | CONNECTOR | DIM/XPNDR ADPT UNIT | M24308-2-283 | 1004 1104 |
| P1000-HD | HOOD | P1000 CONNECTOR | D25-000JVL | 1004 1104 |
| P1000-PIN | CONTACT | P1000 CONNECTOR | 205090-1 | 1004 1104 |
| P1002 | COAX CONNECTOR | VIDEORECORDER | 69475 | 1004 1104 |
| P1003 | CONNECTOR | VIDEORECORDER | DB25S | 1004 1104 |
| P1003-HD | HOOD | P1003 CONNECTOR | DB24659 | 1004 1104 |
| P1004 | COAX CONNECTOR | CABIN VIDEO SYSTEM | 910426-3 P1004 | 1004 1104 |
| P1005 | COAX CONNECTOR | CABIN VIDEO SYSTEM | 69475 | 1004 1104 |
| P1006 | COAX CONNECTOR | CABIN VIDEO SYSTEM | 69475 | 1004 1104 |
| P1007 | COAX CONNECTOR | CABIN VIDEO SYSTEM | 910426-3 P1007 | 1004 1104 |
| G185 | SOCKET (16/18) | ADAS+ | 200333-1 | 1004-9999 |
| G185 | SOCKET (20/22) | ADAS+ | 201328-1 | 1004-9999 |
| G5037 | CABLE CLAMP | SATCOM AVANTI | 200686-1 | 1078-1078 |
| G5037 | GROUNDING BLOCK | SATCOM AVANTI | 203540-1 | 1078-1078 |
| G5037 | HOUSING | SATCOM AVANTI | 201298-1 | 1078-1078 |
| G5037 | JACKSCREW | SATCOM AVANTI | 203535-2 | 1078-1078 |
| G5037 | SOCKET (16/18) | SATCOM AVANTI | 200333-1 | 1078-1078 |
| G5037 | SOCKET (20/22) | SATCOM AVANTI | 201328-1 | 1078-1078 |
| G5037 | WASHER | SATCOM AVANTI | MS35338-136 | 1078-1078 |
| G633 | GROUND STUD | ON FR 17 | MS35206-246 | 1004-1104 |
| G645 | GROUND STUD | PPS GPS | NAS1149DN832H | 1004-1104 |
| G646 | GROUND STUD | FLIR | MS35207-263 | 1004-1104 |
| G647 | GROUD STUD | FLIR | MS35206-245 | 1004-1104 |
| J1000 | CONNECTOR | DIM/XPNDR ADPT UN | DB25P | 1004-1104 |
| J1000 | LATCH | J1000 CONNECTOR | MD15-000-0V3 | 1004-1104 |

| CODE | NOMENCLATURE | LOCATION | PART NUMBER | EFF. |
|---|---|---|---|---|
| J1029 | BACKSHELL | CONNECTOR J1029 | M85049/31-20N | 1004-1104 |
| J1029 | RECEPTACLE | AFT PRESS BHD | MS3474L20-41S | 1004-1104 |
| J1056 | COAX CONNECTOR | VHF 22D (AMI 1) | UG89B/U | 1004-1104 |
| J1079 | LATCH | J1079 CONNECTOR | MD15-000-0V3 | 1004-1104 |
| J1079 | RECEPTACLE | TCAS 1 PNL | DAMA15P | 1004-1104 |
| J1099 | LOCKING TAB | DIM/XPNDR/GPS UNIT | MD15-000-0V3 | 1004-1104 |
| J1099 | RECEPTACLE | DIM/XPNDR/GPS UNIT | DA15P | 1004-1104 |
| J1101 | LOCKING TAB | DIM/XPNDR/GPS UNIT | MD15-000-0V3 | 1004-1104 |
| J1101 | RECEPTACLE | DIM/XPNDR/GPS UNIT | DB25P | 1004-1104 |
| J1105 | RECEPTACLE | KEY FILL P/Y GPS | M55116/10-0 | 1004-1104 |
| J1504 | PIN | CONNECTOR J1504 | 640545-2 | 1004-1104 |
| J1504 | RECEPTACLE | ADVISORY LTS | 1-640508-0 | 1004-1104 |
| J1712 | RECEPTACLE | GALLEY | AC16706-1 | 1004-1104 |
| J1713 | RECEPTACLE | GALLEY | AC16706-1 | 1004-1104 |
| J1915 | CABLE CLAMP | CONNECTOR J1915 | 206070-1 | 1004-1104 |
| J1915 | CONTACT SOCKET | CONNECTOR J1915 | 66101-1 | 1004-1104 |
| J1915 | CONTACT SOCKET(20GA) | CONNECTOR J1915 | 66105-3 | 1004-1104 |
| J1915 | RECEPTACLE | PROVISION FOR GALLEY | 206043-1 | 1004-1104 |
| J1933 | CABLE CLAMP | CONNECTOR 1933 | 206062-3 | 1004-1104 |
| J1933 | CONTACT SOCKET | CONNECTOR J1933 | 66101-1 | 1004-1104 |
| J1933 | CONTACT SOCKET(20GA) | CONNECTOR J1933 | 66105-3 | 1004-1104 |
| P1008 | COAX CONNECTOR | CABIN VIDEO SYSTEM | 69475 | 1004 1104 |
| P1009 | COAX CONNECTOR | CABIN VIDEO SYSTEM | 69475 | 1004 1104 |
| P100-BS | BACKSHELL | P100 CONNECTOR | M85049-31-24N | 1004 1104 |
| P100-BS | BACKSHELL | P100 CONNECTOR | M85049/31-24N | 1004 1104 |
| P1010 | COAX CONNECTOR | CABIN VIDEO SYSTEM | 69475 | 1004 1104 |
| P1011 | COAX CONNECTOR | CABIN VIDEO SYSTEM | 69475 | 1004 1104 |
| P1012 | COAX CONNECTOR | CABIN VIDEO SYSTEM | 69475 | 1004 1104 |
| P1013 | CONNECTOR | 2ND LCD CABIN DSPL | MS3116E8-4SW | 1004 1104 |
| P1014 | COAX CONNECTOR | 2ND LCD CABIN DSPL | 69475 | 1004 1104 |
| P1015 | COAX CONNECTOR | 2ND LCD CABIN DSPL | 69475 | 1004 1104 |

| CODE | NOMENCLATURE | LOCATION | PART NUMBER | EFF. |
|---|---|---|---|---|
| P1016 | COAX CONNECTOR | 2ND LCD CABIN DSPL | 69475 | 1004 1104 |
| P1018 | CONNECTOR | TURN/SLIP IND | MS3106R10SL3S | 1004 1104 |
| P1019 | COAX CONNECTOR | CABIN VIDEO SYSTEM | 69475 | 1004 1104 |
| P1020 | CONNECTOR | WRN HARNESS SECT | MS3126F24-61P | 1034 1104 |
| P1021 | CONNECTOR | WRN HARNESS SECT | MS3126F22-55P | 1034 1104 |
| P1027 | CONNECTOR | INTERFACE VCR | 205162-1 | 1004 1104 |
| P1027-HD | HOOD | P1027 CONNECTOR | D9-000KVL | 1004 1104 |
| P1027-PIN | PIN | P1027 CONNECTOR | 205089-1 | 1004 1104 |
| P1028 | CONNECTOR | INTERFACE MDP | 205162-1 | 1004 1104 |
| P1028-HD | HOOD | P1028 CONNECTOR | D9-000KVL | 1004 1104 |
| P1028-PIN | PIN | P1028 CONNECTOR | 205089-1 | 1004 1104 |
| P103 | CONNECTOR | L TORQUE INDICATOR | MS3476L14-15S | 1004 1104 |
| P1030 | CONNECTOR | AFT PRESS BHD | MS3476L20-41P | 1004 1104 |
| P1030-BS | BACKSHELL | P103 CONNECTOR | M85049/31-20N | 1004 1104 |
| P1032 | CONNECTOR KIT | CDU UNS-1D | K12028-1 | 1004 1104 |
| P1033 | CONNECTOR | UNS-1D COMPUTER | K12028-1 | 1004 1104 |
| P1034 | CONNECTOR | AUDIO 3 | DAMA15P | 1004 1104 |
| P1034-HD | HOOD | P1034 CONNECTOR | D15-000KVL | 1004 1104 |
| P1035 | CONNECTOR | UNS-1D COMPUTER | K12028-1 | 1004 1104 |
| P1036 | CONNECTOR | CTRL PNL AUDIO 3 | MS3476L16-23S | 1004 1104 |
| P1036-BS | BACKSHELL | P103 CONNECTOR | M85049-31-16N | 1004 1104 |
| P1037 | COAX CONNECTOR | GPS ANT | K12018 P1037 | 1004 1104 |
| P1038 | COAX CONNECTOR | SEC DME ANT | M39012-20E0002 | 1004 1104 |
| P1039 | COAX CONNECTOR | VOR SPLITTER | M39012-16-0004 | 1004 1104 |
| P103-BS | BACKSHELL | P103 CONNECTOR | M85049-31-14N | 1004 1104 |
| P104 | CONNECTOR | R TORQUE INDICATOR | MS3476L14-15S | 1004 1104 |
| P1040 | CONNECTOR | RRS FOR UNS-1D | 1246 | 1004 1104 |
| P1041 | COAX CONNECTOR | MKR DIPLEXER | M39012-16-0004 | 1004 1104 |
| P1042 | CONNECTOR | RRS FOR UNS-1D | 1246 | 1004 1104 |
| P1043 | COAX CONNECTOR | MARKER DIPLEXER | M39012-16-0004 | 1004 1104 |
| P1044 | CONNECTOR | AUDIO 3 | DEMA9P | 1004 1104 |
| P1044-HD | HOOD | P1044 CONNECTOR | D9-000KVL | 1004 1104 |
| P1045 | COAX CONNECTOR | MKR DIPLEXER | M39012-16-0004 | 1004 1104 |

| CODE | NOMENCLATURE | LOCATION | PART NUMBER | EFF. |
|---|---|---|---|---|
| P1046 | CONNECTOR | CTRL PNL AUDIO 3 | MS3476L16-23P | 1004 1104 |
| P1046-BS | BACKSHELL | P104 CONNECTOR | M85049-31-16N | 1004 1104 |
| P1047 | CONNECTOR | VOICE RECORDER | 1383 | 1004 1104 |
| P1048 | CONNECTOR | CTRL PNL VOICE RCRD | 1383 | 1004 1104 |
| P1049 | CONNECTOR | G-SWITCH | MS3116F8-3S | 1004 1104 |
| P104-BS | BACKSHELL | P104 CONNECTOR | M85049-31-14N | 1004 1104 |
| P105 | CONNECTOR | CENTER SWITCH PNL | MS27473T24B4S | 1004 1104 |
| P1050 | CONNECTOR KIT | VHF/FH CTRL PNL | IC270-IKC | 1004 1104 |
| P1051 | CONNECTOR | VHF/FH HIGH BAND | NTX-IKC | 1004 1104 |
| P1052 | CONNECTOR KIT | VHF/FH CTRL PNL | CH200-IKC | 1004 1104 |
| P1053 | COAX CONNECTOR | VHF/FH HIGH BAND | NTX-IKC | 1004 1104 |
| P1054 | COAX CONNECTOR | VHF/FH ANT | M39012-16-0004 | 1004 1104 |
| P1055 | COAX CONNECTOR | PRI TRANSPONDER | 225345-8 | 1004 1104 |
| P1057 | COAX CONNECTOR | ELT | M39012/26B0006 | 1004 1104 |
| P1058 | COAX CONNECTOR | ELT-ANT | M39012/26B0006 | 1004 1104 |
| P1059 | CONNECTOR | ELT-CTRL | JA-00-346 | 1004 1104 |
| P105-BS | BACKSHELL | P105 CONNECTOR | M85049-27-24N | 1004 1104 |
| P105-BS | BACKSHELL | P105 CONNECTOR | M85049/27-24N | 1004 1104 |
| P106 | CONNECTOR | STALL COMPUTER | MS3476L20-41S | 1004 1104 |
| P1060 | CONNECTOR | ELT-G SWITCH | JA-00-351 | 1004 1104 |
| P1061 | COAX CONNECTOR | TDR-94 | M39012/26B0006 | 1004 1104 |
| P1062 | COAX CONNECTOR | TDR-94 | M39012/16B0007 | 1004 1104 |
| P1063 | COAX CONNECTOR | SUPPRESSOR TDR-94 | M39012/16-0004 | 1004 1104 |
| P1064 | CONNECTOR | TDR-94 | DBMA25P | 1004 1104 |
| P1064-HD | HOOD | P1064 CONNECTOR | D25-000JVL | 1004 1104 |
| P1067 | CONNECTOR | UNS-1K MMMS | K12036 | 1004 1104 |
| P1068 | CONNECTOR | UNS-1K MMMS | K12036 | 1004 1104 |
| P1069 | CONNECTOR | UNS-1K MMMS | K12036 | 1004 1104 |
| P106-BS | BACKSHELL | P106 CONNECTOR | M85049-31-20N | 1004 1104 |
| P106-BS | BACKSHELL | P106 CONNECTOR | M85049/31-20N | 1004 1104 |
| P107 | CONNECTOR | DEICER L VALVE | MS3106R12S3S | 1004 1082 |
| P107 | CONNECTOR | DEICER L VALVE | MS3456L12S-3S | 1083 1104 |
| P1072 | CONNECTOR | SEE E111 | DAMA15S | 1004 1104 |
| P1072-HD | HOOD | P1072 CONNECTOR | D15-000KVL | 1004 1104 |
| P1072-LT | LOCKING TAB | P1072 CONNECTOR | MD15-000-0V3 | 1004 1104 |
| P1073 | CONNECTOR | ADDU/RVSM | MS3476L22-55S | 1004 1104 |
| P1073-BS | BACKSHELL | P107 CONNECTOR | M85049-31-22N | 1004 1104 |

| CODE | NOMENCLATURE | LOCATION | PART NUMBER | EFF. |
|---|---|---|---|---|
| P1074 | CONNECTOR | SEE S658 | DEMA9S | 1004 1104 |
| P1074-HD | HOOD | P1074 CONNECTOR | MD9-000J | 1004 1104 |
| P1074-LKL | LOCKARM LEVER | P1074 CONNECTOR | MD9-000VL | 1004 1104 |
| P1075 | CONNECTOR | SEE S657. | DEMA9S | 1004 1104 |
| P1075-HD | HOOD | P1075 CONNECTOR | MD9-000J | 1004 1104 |
| P1075-LKL | LOCKARM LEVER | P1075 CONNECTOR | MD9-000VL | 1004 1104 |
| P1076 | RECEPTACLE | ADDU/RVSM | 205209-1 | 1004 1104 |
| P1076-HD | HOOD | P1076 CONNECTOR | MD37-000J | 1004 1104 |
| P1076-LKL | LOCKARM LEVER | P1076 CONNECTOR | MD37-000VL | 1004 1104 |
| P1076-PIN | CONTACT | P1076 CONNECTOR | 205090-1 | 1004 1104 |
| P1077 | CONNECTOR | TCAS 1 | 817-11900-003 | 1004 1104 |
| P1078 | CONNECTOR | TCAS 1 | 817-11900-003 | 1004 1104 |
| P1079 | CONNECTOR | TCAS 1 | DAMA15S | 1004 1104 |
| P1079-HD | HOOD | P1079 CONNECTOR | D15-000KVL | 1004 1104 |
| P107-LB | LIPPED BOOT | P107 CONNECTOR | 222K142-25 | 1083 1104 |
| P107-SBA | SHRINK BOOT | P107 CONNECTOR | M85049/60-1N12 | 1083 1104 |
| P107-SBA | SHRINK BOOT | P107 CONNECTOR | M85049/60-1N12 | 1083 1104 |
| P108 | CONNECTOR | DEICER R VALVE | MS3456L12S-3S | 1083 1104 |
| P108 | CONNECTOR | DEICER R VALVE | MS3106R12S3S | 1004 1082 |
| P1082 | CONNECTOR | RVSM | 9B-03508-72 | 1059 1104 |
| P1087 | CONNECTOR | UNS-1L MMMS COMPUTER | K12036 | 1004 1104 |
| P1089 | RECEPTACLE | EFIS FAN | 1-640518-0 | 1063 1104 |
| P1089-SK | SOCKET | P1089 CONNECTOR | 350666-2 | 1063 1104 |
| P108-LB | LIPPED BOOT | P108 CONNECTOR | 222K142-25 | 1083 1104 |
| P108-SBA | SHRINK BOOT | P108 CONNECTOR | M85049/60-1N12 | 1083 1104 |
| P109 | CONNECTOR | DEICER TIMER | MS3476L12-10S | 1004 1104 |
| P1099 | CONNECTOR | DIM/XPNDR ADPT UNIT | DAMA15S | 1004 1104 |
| P1099-HD | HOOD | P1099 CONNECTOR | D15-000KVL | 1004 1104 |
| P109-BS | BACKSHELL | P109 CONNECTOR | M85049/31-12N | 1016 1104 |
| P109-BS | BACKSHELL | P109 CONNECTOR | M85049/31-12N | 1004 1015 |
| P109-BS | BACKSHELL | P109 CONNECTOR | M85049-31-12N | 1004 1104 |
| P10-BS | BACKSHELL | P10 CONNECTOR | M85049-31-16N | 1004 1104 |
| P11 | CONNECTOR | ANNUNCIATOR PNL | M24308-2-285 | 1004 1100 |
| P1101 | CONNECTOR | DIM/XPNDR ADAPT UNIT | M24308-2-283 | 1004 1104 |
| P1101-HD | HOOD | P1101 CONNECTOR | D25-000JVL | 1004 1104 |

| CODE | NOMENCLATURE | LOCATION | PART NUMBER | EFF. |
|---|---|---|---|---|
| P1101-PIN | CONTACT | P1101 CONNECTOR | 205090-1 | 1004 1104 |
| P111 | CONNECTOR | YAW ACT | MS3476L10-6S | 1004 1104 |
| P111-BS | BACKSHELL | P111 CONNECTOR | M85049-31-10N | 1004 1104 |
| P114 | CONNECTOR | CONTROL BOX | MS3476L10-6S | 1004 1104 |
| P114-BS | BACKSHELL | P114 CONNECTOR | M85049-31-10N | 1004 1104 |
| P114-BS | BACKSHELL | P114 CONNECTOR | M85049/31-10N | 1016 1104 |
| P114-BS | BACKSHELL | P114 CONNECTOR | M85049/31-10N | 1004 1015 |
| P116 | CONNECTOR | COPILOT SWITCH PNL | MS3476L10-6S | 1004 1100 |
| P116 | CONNECTOR | COPILOT SWITCH PNL | MS3476L22-41S | 1004 1104 |
| P116-BS | BACKSHELL | P116 CONNECTOR | M85049-31-10N | 1004 1100 |
| P116-BS | BACKSHELL | P116 CONNECTOR | M85049-31-22N | 1004 1104 |
| P118 | CONNECTOR | TRIM SWITCH PNL | MS3476L16-26S | 1004 1104 |
| P118-BS | BACKSHELL | P118 CONNECTOR | M85049-31-16N | 1004 1104 |
| P11-HD | HOOD | P11 CONNECTOR | D50-000KVL | 1004 1100 |
| P11-HD | HOOD | P11 CONNECTOR | D-50-000-K-VL | 1004 1104 |
| P11-SK | SOCKET | P11 CONNECTOR | M39029-63-368 | 1004 1104 |
| P12 | CONNECTOR | ANNUNCIATOR PNL | M24308-4-263 | 1004 1100 |
| P120 | CONNECTOR | TRHOTTLE QUADRANT | MS3476L16-26P | 1004 1100 |
| P120-BS | BACKSHELL | P120 CONNECTOR | M85049/31-16N | 1004 1021 |
| P120-BS | BACKSHELL | P120 CONNECTOR | M85049/31-16N | 1022 1104 |
| P120-BS | BACKSHELL | P120 CONNECTOR | M85049-31-16N | 1004 1100 |
| P121 | CONNECTOR | 4 FLAP INDICATOR | MS3476L14-19S | 1004 1104 |
| P121-BS | BACKSHELL | P121 CONNECTOR | M85049/31-14N | 1004 1007 |
| P121-BS | BACKSHELL | P121 CONNECTOR | M85049-31-14N | 1004 1104 |
| P122 | CONNECTOR | HYD PRESS INDICATOR | MS3476L10-6SW | 1004 1104 |
| P122-BS | BACKSHELL | P122 CONNECTOR | M85049-31-10N | 1004 1104 |
| P122-BS | BACKSHELL | P122 CONNECTOR | M85049/31-10N | 1004 1015 |
| P124 | CONNECTOR | W-H R ENG FWD ZONE | D38999/26KE26PN | 1083 1100 |
| P124 | CONNECTOR | W-H R ENG FWD ZONE | MS3476L16-26P | 1004 1082 |
| P124-BS | BACKSHELL | P124 CONNECTOR | M85049-31-16N | 1004 1082 |
| P124-BS | BACKSHELL | P124 CONNECTOR | M85049/31-16N | 1004 1104 |
| P124-SBA | SHRINK BOOT | P124 CONNECTOR | 310HJ001Z117-204 | 1083 1100 |
| P125 | CONNECTOR | W-H R ENG FWD ZONE | D38999/26KE26PN | 1083 1100 |

| CODE | NOMENCLATURE | LOCATION | PART NUMBER | EFF. |
|---|---|---|---|---|
| P125 | CONNECTOR | W-H R ENG FWD ZONE | MS3476L16-26P | 1004 1082 |
| P125-BS | BACKSHELL | P125 CONNECTOR | M85049-31-16N | 1004 1082 |
| P125-BS | BACKSHELL | P125 CONNECTOR | M85049/31-16N | 1004 1104 |
| P125-SBA | SHRINK BOOT | P125 CONNECTOR | 310HJ001Z17-204 | 1083 1100 |
| P126 | CONNECTOR | W-H R ENG AFT ZONE | MS3476L18-32S | 1019 1082 |
| P126 | CONNECTOR | W-H R ENG AFT ZONE | D38999/26KG39PN | 1083 1100 |
| P126 | CONNECTOR | W-H R ENG AFT ZONE | MS3476L16-26P | 1004 1018 |
| P126-BS | BACKSHELL | P126 CONNECTOR | M85049-31-16N | 1004 1018 |
| P126-BS | BACKSHELL | P126 CONNECTOR | M85049-31-18N | 1019 1082 |
| P126-BS | BACKSHELL | P126 CONNECTOR | M85049/31-16N | 1004 1104 |
| P126-LB | LIPPED BOOT | P126 CONNECTOR | 222K163-25 | 1083 1100 |
| P126-PIN | CONTACT | P126 CONNECTOR | M39029/9-134 | 1004 1104 |
| P126-PIN | CONTACT | P126 CONNECTOR | M39029/9-135 | 1004 1104 |
| P126-PIN | CONTACT | P126 CONNECTOR | M39029-9-135 | 1004 1082 |
| P126-PIN | CONTACT | P126 CONNECTOR | M39029/87-476 | 1083 1100 |
| P126-PIN | CONTACT | P126 CONNECTOR | M39029-9-134 | 1004 1082 |
| P126-PIN | CONTACT | P126 CONNECTOR | M39029/87-475 | 1083 1100 |
| P126-SBA | SHRINK BOOT | P126 CONNECTOR | 310HS001Z121-204 | 1083 1100 |
| P127 | CONNECTOR | | D38999/26KG39PN | 1083 1100 |
| P127 | CONNECTOR | W-H L ENG AFT ZONE | MS3476L16-26P | 1004 1018 |
| P127 | CONNECTOR | W-H L ENG AFT ZONE | MS3476L18-32S | 1019 1082 |
| P127-BS | BACKSHELL | P127 CONNECTOR | M85049-31-16N | 1019 1082 |
| P127-BS | BACKSHELL | P127 CONNECTOR | M85049/31-16N | 1004 1104 |
| P127-BS | BACKSHELL | P127 CONNECTOR | M58049-31-18N | 1004 1018 |
| P127-PIN | CONTACT | P127 CONNECTOR | M39029/9-135 | 1004 1104 |
| P127-PIN | CONTACT | P127 CONNECTOR | M39029-9-134 | 1004 1082 |
| P127-PIN | CONTACT | P127 CONNECTOR | M39029/87-476 | 1083 1100 |
| P127-PIN | CONTACT | P127 CONNECTOR | M39029-9-135 | 1004 1082 |
| P127-PIN | CONTACT | P127 CONNECTOR | M39029/9-134 | 1004 1104 |
| P127-PIN | CONTACT | P127 CONNECTOR | M39029/87-475 | 1083 1100 |
| P127-SBA | SHRINK BOOT | P127 CONNECTOR | 310HS001Z121-204 | 1083 1100 |
| P128 | CONNECTOR | COPILOT CB PNL | MS3476L22-41P | 1004 1100 |
| P128-BS | BACKSHELL | P128 CONNECTOR | M85049/31-22N | 1004 1104 |
| P128-BS | BACKSHELL | P128 CONNECTOR | M85049-31-22N | 1004 1100 |
| P12-HD | HOOD | P12 CONNECTOR | D-50-000-K-VL | 1004 1104 |
| P12-HD | HOOD | P12 CONNECTOR | D50-000KVL | 1004 1100 |
| P12-PIN | PIN | P12 CONNECTOR | M39029/64-369 | 1004 1104 |

| CODE | NOMENCLATURE | LOCATION | PART NUMBER | EFF. |
|---|---|---|---|---|
| P12-PIN | PIN | P12 CONNECTOR | M39029-64-369 | 1004 1100 |
| P130 | CONNECTOR | COPILOT CB PNL - E30 | MS3476L20-41P | 1004 1100 |
| P130-BS | BACKSHELL | P130 CONNECTOR | M85049-31-20N | 1004 1100 |
| P130-BS | BACKSHELL | P130 CONNECTOR | M85049/31-20N | 1004 1104 |
| P131 | CONNECTOR | PILOT CB PNL | MS3476L22-41P | 1004 1100 |
| P131-BS | BACKSHELL | P131 CONNECTOR | M85049-31-22N | 1004 1100 |
| P131-BS | BACKSHELL | P131 CONNECTOR | M85049/31-22N | 1004 1104 |
| P133 | CONNECTOR | PILOT CB PNL - E31 | MS3476L20-41P | 1004 1100 |
| P133-BS | BACKSHELL | P133 CONNECTOR | M85049-31-20N | 1004 1100 |
| P133-BS | BACKSHELL | P133 CONNECTOR | M85049/31-20N | 1004 1104 |
| P135 | CONNECTOR | L AIR FLOOR SOV | MS3476L10-6S | 1004 1078 |
| P135 | CONNECTOR | L AIR FLOOR SOV | MS3476L10-6S | 1082 1082 |
| P135-BS | BACKSHELL | P135 CONNECTOR | M85049-31-10N | 1004 1078 |
| P135-BS | BACKSHELL | P135 CONNECTOR | M85049-31-10N | 1082 1082 |
| P136 | CONNECTOR | R AIR FLOOR SOV | MS3476L10-6S | 1004 1078 |
| P136 | CONNECTOR | R AIR FLOOR SOV | MS3476L10-6S | 1082 1082 |
| P136-BS | BACKSHELL | P136 CONNECTOR | M85049-31-10N | 1004 1078 |
| P136-BS | BACKSHELL | P136 CONNECTOR | M85049-31-10N | 1082 1082 |
| P137 | CONNECTOR | L BLEED AIR SOV | MS3126F8-33S | 1004 1082 |
| P137 | CONNECTOR | L BLEED AIR SOV | MS3476L8-33S | 1083 1104 |
| P137-SBA | SHRINK BOOT | P137 CONNECTOR | M85049/60-1N8 | 1083 1104 |
| P138 | CONNECTOR | R BLEED AIR SOV | MS3126F8-33S | 1004 1082 |
| P138 | CONNECTOR | R BLEED AIR SOV | MS3476L8-33S | 1083 1104 |
| P138-SBA | SHRINK BOOT | P138 CONNECTOR | M85049/60-1N8 | 1083 1104 |
| P139 | CONNECTOR | EMERG BLEED AIR SOV | MS3126F8-33S | 1004 1104 |
| P140 | CONNECTOR | SEC OUTFLOW SOV | M83723-86R1005N | 1004 1104 |
| P140-BS | BACKSHELL | P140 CONNECTOR | M85049/31-10N | 1004 1104 |
| P141 | CONNECTOR | TORQUE MOTOR VALVE | MS27473T10B05S | 1004 1104 |
| P141-BS | BACKSHELL | P141 CONNECTOR | M85049-27-10N | 1004 1104 |
| P142 | CONNECTOR | PRESS SELECTOR | MS3476L14-19S | 1004 1104 |
| P142-BS | BACKSHELL | P142 CONNECTOR | M85049-31-14N | 1004 1104 |
| P143 | CONNECTOR | PRESS CONTROLLER | MS3476L14-19S | 1004 1104 |
| P143-BS | BACKSHELL | P143 CONNECTOR | M85049-31-14N | 1004 1104 |
| P144 | CONNECTOR | AFTER FS6000 | MS3476L12-10S | 1004 1100 |
| P144-BS | BACKSHELL | P144 CONNECTOR | M85049-31-12N | 1004 1100 |
| P144-BS | BACKSHELL | P144 CONNECTOR | M85049/31-12N | 1004 1022 |
| P145 | CONNECTOR | AFTER FS6000 | MS3476L12-10S | 1004 1100 |

| CODE | NOMENCLATURE | LOCATION | PART NUMBER | EFF. |
|---|---|---|---|---|
| P145-BS | BACKSHELL | P145 CONNECTOR | M85049-31-12N | 1004 1100 |
| P145-BS | BACKSHELL | P145 CONNECTOR | M85049/31-12N | 1004 1022 |
| P146 | CONNECTOR | DIMMER CTRL PNL | MS3476L18-32S | 1004 1104 |
| P146-BS | BACKSHELL | P146 CONNECTOR | M85049/31-18N | 1004 1104 |
| P146-BS | BACKSHELL | P146 CONNECTOR | M85049-31-18N | 1004 1104 |
| P148 | CONNECTOR | POWER SUPPLAY | MS3106R16S1S | 1004 1104 |
| P15 | CONNECTOR | BOT STROBE SUPPLY | MS3106R10SL3S | 1004 1104 |
| P1501 | CONNECTOR | ADVISORY LTS | 1-640508-0 | 1004 1104 |
| P1501-PIN | PIN | P1501 CONNECTOR | 640545-2 | 1004 1104 |
| P1502 | CONNECTOR | ADVISORY LTS | 1-640508-0 | 1004 1104 |
| P1502-PIN | PIN | P1502 CONNECTOR | 640545-2 | 1004 1104 |
| P1503 | CONNECTOR | ADVISORY LTS | 1-640508-0 | 1004 1104 |
| P1503-PIN | PIN | P1503 CONNECTOR | 640545-2 | 1004 1104 |
| P153 | CONNECTOR | HYD PACKAGE (LH) | MS3476L14-19S | 1004 1104 |
| P153-BS | BACKSHELL | P153 CONNECTOR | M85049/31-14N | 1004 1015 |
| P153-BS | BACKSHELL | P153 CONNECTOR | M85049-31-14N | 1004 1104 |
| P154 | CONNECTOR | HYD PACKAGE (RH) | MS3126F8-33S | 1004 1104 |
| P155 | CONNECTOR | L FUEL LOW PRESS | MS3126F8-33S | 1004 1100 |
| P155 | CONNECTOR | L FUEL LOW PRESS | MS3126F8-33S | 1102 1104 |
| P155 | CONNECTOR | L FUEL LOW PRESS | MS3476L8-33S | 1101 1101 |
| P155-BS | BACKSHELL | P155 CONNECTOR | M85049/60-1N8 | 1101 1101 |
| P155-SLB | STRAIGHT LIPPED BOOT | P155 CONNECTOR | 202K121-25 | 1101 1101 |
| P156 | CONNECTOR | R FUEL LOW PRESS | MS3476L8-33S | 1083 1104 |
| P156 | CONNECTOR | R FUEL LOW PRESS | MS3126F8-33S | 1004 1082 |
| P156-LB | LIPPED BOOT | P156 CONNECTOR | 202K121-25 | 1083 1104 |
| P156-SBA | SHRINK BOOT | P156 CONNECTOR | M85049/60-1N8 | 1083 1104 |
| P157 | CONNECTOR | SERVO VALVE | MS3440H10C6P | 1004 1104 |
| P158 | CONNECTOR | COMMAND POTENTIOMTR | MS3476L16-26S | 1004 1104 |
| P158-BS | BACKSHELL | P158 CONNECTOR | M85049-31-16N | 1004 1104 |
| P158-BS | BACKSHELL | P158 CONNECTOR | M85049/31-16N | 1004 1018 |
| P158-BS | BACKSHELL | P158 CONNECTOR | M85049/31-16N | 1019 1104 |

| CODE | NOMENCLATURE | LOCATION | PART NUMBER | EFF. |
|---|---|---|---|---|
| P159 | CONNECTOR | FEEDBACK POTENTMTR | 602GB-06E-10-6S | 1004 1104 |
| P16 | CONNECTOR | TOP STROBE SUPPLY | MS3106R10SL3S | 1004 1104 |
| P160 | CONNECTOR | SELECT VALVE | MS3440H8C-33P | 1004 1104 |
| P1601 | CONNECTOR | CIRCUIT CONTROLLER | 205210-1 | 1004 1104 |
| P1601-HD | HOOD | P1601 CONNECTOR | MD37-000J | 1004 1104 |
| P1601-LKL | LOCKARM LEVER | P1601 CONNECTOR | MD37-000VL | 1004 1104 |
| P1601-PIN | PIN | P1601 CONNECTOR | 205089-1 | 1004 1104 |
| P1602 | RECEPTACLE | CIRCUIT CONTROLLER | 205209-1 | 1004 1104 |
| P1602-HD | HOOD | P1602 CONNECTOR | MD37-000J | 1004 1104 |
| P1602-LKL | LOCKARM LEVER | P1602 CONNECTOR | MD37-000VL | 1004 1104 |
| P1602-PIN | CONTACT | P1602 CONNECTOR | 205090-1 | 1004 1104 |
| P1607 | RECEPTACLE | ENTRY LIGHT | 1-640508-0 | 1004 1104 |
| P1607-PIN | PIN | P1607 CONNECTOR | 640545-2 | 1004 1104 |
| P1608 | RECEPTACLE | RH CREW LIGHT | 1-640508-0 | 1004 1104 |
| P1608-PIN | PIN | P1608 CONNECTOR | 640545-2 | 1004 1104 |
| P1609 | RECEPTACLE | LH CREW LIGHT | 1-640508-0 | 1004 1104 |
| P1609-PIN | PIN | P1609 CONNECTOR | 640545-2 | 1004 1104 |
| P1611 | CONNECTOR | ELECT PNL ENTRY | 103957-1 | 1004 1104 |
| P1612 | CONNECTOR | PNL E1610 | 103644-7 | 1004 1104 |
| P1613 | CONNECTOR | TOILET | 206429-1 | 1004 1104 |
| P1613-CP | CABLE CLAMP | P1613 CONNECTOR | 206062-3 | 1004 1104 |
| P1613-PIN | PIN | P1613 CONNECTOR | 66099-1 | 1004 1104 |
| P162 | CONNECTOR | R ENG OIL LEVEL | D38999-26FA98SN | 1004 1104 |
| P162-BS | BACKSHELL | P162 CONNECTOR | M85049-20-09N | 1004 1082 |
| P162-BS | BACKSHELL | P162 CONNECTOR | M85049/20-09N | 1004 1104 |
| P162-SBA | SHRINK BOOT | P162 CONNECTOR | 310HS001M09-204 | 1083 1104 |
| P163 | CONNECTOR | L ENG OIL LEVEL | D38999-26FA98SN | 1004 1104 |
| P1630 | CONNECTOR | UTILITY CB PNL | 201359-1 | 1004 1104 |
| P1630-CP | CABLE CLAMP | P1630 CONNECTOR | 201229-1 | 1004 1104 |
| P1630-PIN | PIN | P1630 CONNECTOR | 66099-1 | 1004 1104 |

| CODE | NOMENCLATURE | LOCATION | PART NUMBER | EFF. |
|---|---|---|---|---|
| P1630-PIN | PIN | P1630 CONNECTOR | 66103-1 | 1004 1104 |
| P1630-PIN | PIN | P1630 CONNECTOR | 201785-4 | 1004 1104 |
| P1630-SCW | SCREW | P1630 CONNECTOR | 201388-1 | 1004 1104 |
| P1630-TJW | TURNABLE JACKSCREW | P1630 CONNECTOR | 201389-1 | 1004 1104 |
| P163-BS | BACKSHELL | P163 CONNECTOR | M85049-20-09N | 1004 1082 |
| P163-BS | BACKSHELL | P163 CONNECTOR | M85049/20-09N | 1004 1104 |
| P163-LB | LIPPED BOOT | P163 CONNECTOR | 222K121-25 | 1083 1104 |
| P163-SBA | SHRINK BOOT | P163 CONNECTOR | 310HS001M09-204 | 1083 1104 |
| P164 | CONNECTOR | GROUND RFL/TEST PNL | MS3476L14-19S | 1004 1104 |
| P164-BS | BACKSHELL | P164 CONNECTOR | M85049/31-14N | 1004 1104 |
| P164-BS | BACKSHELL | P164 CONNECTOR | M85049-31-14N | 1004 1104 |
| P165 | CONNECTOR | L FWD WING | MS3476L12-10S | 1004 1104 |
| P165-BS | BACKSHELL | P165 CONNECTOR | M85049-31-12N | 1004 1104 |
| P166 | CONNECTOR | R FWD WING | MS3476L12-10S | 1004 1104 |
| P166-BS | BACKSHELL | P166 CONNECTOR | M85049-31-12N | 1004 1104 |
| P1690 | CONNECTOR | PLATE CONNECTOR | 201357-1 | 1004 1104 |
| P1690-CP | CABLE CLAMP | P1690 CONNECTOR | 201224-1 | 1004 1104 |
| P1690-PIN | PIN | P1690 CONNECTOR | 66103-1 | 1004 1104 |
| P1690-PIN | PIN | P1690 CONNECTOR | 201786-4 | 1004 1104 |
| P1690-PIN | PIN | P1690 CONNECTOR | 66099-1 | 1004 1104 |
| P1690-SCW | SCREW | P1690 CONNECTOR | 201388-1 | 1004 1104 |
| P1690-TJW | TURNABLE JACKSCREW | P1690 CONNECTOR | 201389-1 | 1004 1104 |
| P1691 | CONNECTOR | POWER SUPPLY | MS3106E14S2S | 1004 1104 |
| P1692 | CONNECTOR | POWER SUPPLY | MS3106E14S2S | 1004 1104 |
| P1693 | CONNECTOR | POWER SUPPLY | MS3106E14S2S | 1004 1104 |
| P1697 | CONNECTOR | POWER SUPPLY | MS3106E14S2S | 1004 1104 |
| P1698 | CONNECTOR | POWER SUPPLY | MS3106E14S2S | 1004 1104 |
| P17 | CONNECTOR | BOT STROBE SUPPLY | MS3106R10SL3P | 1004 1104 |
| P1701 | CONNECTOR | WATER TANK | SUPPLIED WITH TANK | 1004 1104 |
| P1702 | CONNECTOR | AUDIO DISTR UNIT | DC37P | 1004 1104 |
| P1702-HD | HOOD | P1702 CONNECTOR | D37-000JVL | 1004 1104 |

| CODE | NOMENCLATURE | LOCATION | PART NUMBER | EFF. |
|---|---|---|---|---|
| P1703 | RECEPTACLE | WATER HEATING | 206430-2 | 1034 1104 |
| P1703-CP | CABLE CLAMP | P1703 CONNECTOR | 206062-3 | 1034 1104 |
| P1703-PIN | CONTACT | P1703 CONNECTOR | 66105-3 | 1034 1104 |
| P1706 | CONNECTOR | AUDIO DISTR UNIT | DB25P | 1004 1104 |
| P1706-HD | HOOD | P1706 CONNECTOR | D25-000JVL | 1004 1104 |
| P18 | CONNECTOR | TOP STROBE SUPPLY | MS3106R10SL3P | 1004 1104 |
| P1800 | CONNECTOR | INTERF PSU RIGHT | 201359-1 | 1004 1104 |
| P1800-CP | CABLE CLAMP | P1800 CONNECTOR | 201229-1 | 1004 1104 |
| P1800-PIN | PIN | P1800 CONNECTOR | 66103-1 | 1004 1104 |
| P1800-PIN | PIN | P1800 CONNECTOR | 201785-4 | 1004 1104 |
| P1800-PIN | PIN | P1800 CONNECTOR | 66099-1 | 1004 1104 |
| P1800-SCW | SCREW | P1800 CONNECTOR | 201388-1 | 1004 1104 |
| P1800-TJW | TURNABLE JACKSCREW | P1800 CONNECTOR | 201389-1 | 1004 1104 |
| P1801 | CONNECTOR | INTERF PSU LEFT | 201359-1 | 1004 1104 |
| P1801-CP | CABLE CLAMP | P1801 CONNECTOR | 201229-1 | 1004 1104 |
| P1801-PIN | PIN | P1801 CONNECTOR | 66099-1 | 1004 1104 |
| P1801-PIN | PIN | P1801 CONNECTOR | 201785-4 | 1004 1104 |
| P1801-PIN | PIN | P1801 CONNECTOR | 66103-1 | 1004 1104 |
| P1801-SCW | SCREW | P1801 CONNECTOR | 201388-1 | 1004 1104 |
| P1801-TJW | TURNABLE JACKSCREW | P1801 CONNECTOR | 201389-1 | 1004 1104 |
| P1803 | CONNECTOR | RH CIRCUIT CTRL | 205210-1 | 1004 1104 |
| P1803-HD | HOOD | P1803 CONNECTOR | MD37-000J | 1004 1104 |
| P1803-LKL | LOCKARM LEVER | P1803 CONNECTOR | MD37-000VL | 1004 1104 |
| P1803-PIN | PIN | P1803 CONNECTOR | 205089-1 | 1004 1104 |
| P1804 | RECEPTACLE | RH CIRCUIT CTRL | 205209-1 | 1004 1104 |
| P1804-HD | HOOD | P1804 CONNECTOR | MD37-000J | 1004 1104 |
| P1804-LKL | LOCKARM LEVER | P1804 CONNECTOR | MD37-000VL | 1004 1104 |
| P1804-PIN | CONTACT | P1804 CONNECTOR | 205090-1 | 1004 1104 |

| CODE | NOMENCLATURE | LOCATION | PART NUMBER | EFF. |
|---|---|---|---|---|
| P181 | CONNECTOR | INBOARD FLAP ACTR | MS3476L14-19S | 1004 1104 |
| P1813 | CONNECTOR | LH CIRCUIT CTRL | 205210-1 | 1004 1104 |
| P1813-HD | HOOD | P1813 CONNECTOR | MD37-000J | 1004 1104 |
| P1813-LKL | LOCKARM LEVER | P1813 CONNECTOR | MD37-000VL | 1004 1104 |
| P1813-PIN | PIN | P1813 CONNECTOR | 205089-1 | 1004 1104 |
| P1814 | RECEPTACLE | LH CIRCUIT CTRL | 205209-1 | 1004 1104 |
| P1814-HD | HOOD | P1814 CONNECTOR | MD37-000J | 1004 1104 |
| P1814-LKL | LOCKARM LEVER | P1814 CONNECTOR | MD37-000VL | 1004 1104 |
| P1814-PIN | CONTACT | P1814 CONNECTOR | 205090-1 | 1004 1104 |
| P181-BS | BACKSHELL | P181 CONNECTOR | M85049/31-14N | 1004 1007 |
| P181-BS | BACKSHELL | P181 CONNECTOR | M85049-31-14N | 1004 1104 |
| P182 | CONNECTOR | OUTBOARD FLAP ACTR | MS3476L14-19S | 1004 1104 |
| P1821 | CONNECTOR | INTERF PNL 1 RIGHT | 206044-1 | 1004 1104 |
| P1821-CP | CABLE CLAMP | P1821 CONNECTOR | 206070-1 | 1004 1104 |
| P1821-PIN | PIN | P1821 CONNECTOR | 66103-1 | 1004 1104 |
| P1822 | CONNECTOR | ELECT PNL 1 RIGHT | 103957-1 | 1004 1104 |
| P1822A | CONNECTOR | EL PNL 1 RIGHT ARM | 103957-1 | 1004 1104 |
| P1824 | CONNECTOR | PNL E1630 | 103644-9 | 1004 1104 |
| P1826A | CONNECTOR | PNL E1640 | 103644-7 | 1004 1104 |
| P1827A | CONNECTOR | PNL E1672A | 103644-5 | 1004 1104 |
| P182-BS | BACKSHELL | P182 CONNECTOR | M85049-31-14N | 1004 1104 |
| P182-BS | BACKSHELL | P182 CONNECTOR | M85049/31-14N | 1004 1007 |
| P183 | CONNECTOR | INBOARD FLAP ACTR | MS3476L12-3S | 1004 1104 |
| P1831 | CONNECTOR | INTERF PNL DIVAN L | 206044-1 | 1004 1104 |
| P1831-CP | CABLE CLAMP | P1831 CONNECTOR | 206070-1 | 1004 1104 |
| P1831-PIN | PIN | P1831 CONNECTOR | 66103-1 | 1004 1104 |
| P1832 | CONNECTOR | ELECT PNL DIVAN L | 103957-1 | 1004 1104 |
| P1833 | CONNECTOR | PNL E1629 | 103644-5 | 1004 1104 |
| P183-BS | BACKSHELL | P183 CONNECTOR | M85049/31-12N | 1004 1007 |
| P183-BS | BACKSHELL | P183 CONNECTOR | M85049-31-12N | 1004 1104 |

| CODE | NOMENCLATURE | LOCATION | PART NUMBER | EFF. |
|---|---|---|---|---|
| P184 | CONNECTOR | OUTBOARD FLAP ACTR | MS3476L14-4S | 1004 1104 |
| P1841 | CONNECTOR | INTERF PNL DIVAN R | 206044-1 | 1004 1104 |
| P1841-CP | CABLE CLAMP | P1841 CONNECTOR | 206070-1 | 1004 1104 |
| P1841-PIN | PIN | P1841 CONNECTOR | 66103-1 | 1004 1104 |
| P1842 | CONNECTOR | ELECT PNL DIVAN R | 103957-1 | 1004 1104 |
| P1844 | CONNECTOR | PNL E1632 | 103644-9 | 1004 1104 |
| P184-BS | BACKSHELL | P184 CONNECTOR | M85049-31-14N | 1004 1104 |
| P184-BS | BACKSHELL | P184 CONNECTOR | M85049/31-14N | 1004 1007 |
| P185 | CONNECTOR | FLAP CONT UNIT | MS3476L18-8S | 1004 1104 |
| P1851 | CONNECTOR | INTERF PNL 3 LEFT | 206044-1 | 1004 1104 |
| P1851-CP | CABLE CLAMP | P1851 CONNECTOR | 206070-1 | 1004 1104 |
| P1851-PIN | PIN | P1851 CONNECTOR | 66103-1 | 1004 1104 |
| P1852 | CONNECTOR | ELECT PNL 3 LEFT | 103957-1 | 1004 1104 |
| P1852A | CONNECTOR | EL PNL 3 LEFT ARM | 103957-1 | 1004 1104 |
| P1853 | CONNECTOR | PNL E1627 | 103644-5 | 1004 1104 |
| P1857 | CONNECTOR | SEAT 3 LH | 103957-3 | 1004 1104 |
| P1857A | CONNECTOR | PNL E1667A | 103957-3 | 1004 1104 |
| P185-BS | BACKSHELL | P185 CONNECTOR | M85049/31-18N | 1004 1007 |
| P185-BS | BACKSHELL | P185 CONNECTOR | M85049-31-18N | 1004 1104 |
| P186 | CONNECTOR | FLAP CONT UNIT | MS3476L20-41P | 1004 1104 |
| P1861 | CONNECTOR | INTERF PNL 4 RIGHT | 206044-1 | 1004 1104 |
| P1861-CP | CABLE CLAMP | P1861 CONNECTOR | 206070-1 | 1004 1104 |
| P1861-PIN | PIN | P1861 CONNECTOR | 66103-1 | 1004 1104 |
| P1862 | CONNECTOR | ELECT PNL 4 RIGHT | 103957-1 | 1004 1104 |
| P1862A | CONNECTOR | EL PNL 4 RIGHT ARM | 103957-1 | 1004 1104 |
| P1863A | CONNECTOR | PNL E1626A | 103957-3 | 1004 1104 |
| P1866 | CONNECTOR | PNL E1664 | 103644-5 | 1004 1104 |
| P1867A | CONNECTOR | SEAT 4 RH | 103957-3 | 1004 1104 |
| P186-BS | BACKSHELL | P186 CONNECTOR | M85049-31-20N | 1004 1104 |
| P186-BS | BACKSHELL | P186 CONNECTOR | M85049/31-20N | 1004 1007 |
| P187 | CONNECTOR | FLAP CONT UNIT | MS3476L16-26P | 1004 1104 |
| P1871 | CONNECTOR | INTERF PNL 2 LEFT | 206044-1 | 1004 1104 |

| CODE | NOMENCLATURE | LOCATION | PART NUMBER | EFF. |
|---|---|---|---|---|
| P1871-CP | CABLE CLAMP | P1871 CONNECTOR | 206070-1 | 1004 1104 |
| P1871-PIN | PIN | P1871 CONNECTOR | 66103-1 | 1004 1104 |
| P1872 | CONNECTOR | ELECT PNL 2 LEFT | 103957-1 | 1004 1104 |
| P1872A | CONNECTOR | EL PNL 2 LEFT ARM | 103957-1 | 1004 1104 |
| P1874 | CONNECTOR | PNL E1631 | 103644-5 | 1004 1104 |
| P1875 | CONNECTOR | PNL E1651 | 103644-9 | 1004 1104 |
| P1876 | CONNECTOR | SEAT 2 LH | 103644-5 | 1039 1104 |
| P1876 | CONNECTOR | SEAT 2 LH | 103644-7 | 4 1038 |
| P1877A | CONNECTOR | PNL E1657 | 103644-7 | 1004 1104 |
| P1878A | CONNECTOR | PNL E1669A | 103957-3 | 1004 1104 |
| P187-BS | BACKSHELL | P187 CONNECTOR | M85049/31-16N | 1004 1007 |
| P187-BS | BACKSHELL | P187 CONNECTOR | M85049-31-16N | 1004 1104 |
| P188 | CONNECTOR | FLAP CONT UNIT | MS3476L18-8P | 1004 1104 |
| P1881 | CONNECTOR | INTERF PNL 2 RIGHT | 206044-1 | 1004 1104 |
| P1881-CP | CABLE CLAMP | P1881 CONNECTOR | 206070-1 | 1004 1104 |
| P1881-PIN | PIN | P1881 CONNECTOR | 66103-1 | 1004 1104 |
| P1882 | CONNECTOR | ELECT PNL 2 RIGHT | 103957-1 | 1004 1104 |
| P1882A | CONNECTOR | EL PNL 2 RIGHT ARM | 103957-1 | 1004 1104 |
| P1883 | CONNECTOR | PNL E1628 | 103644-5 | 1004 1104 |
| P1884 | CONNECTOR | PNL E1652 | 103644-9 | 1004 1104 |
| P1886 | CONNECTOR | SEAT 2 LH | 103644-5 | 1039 1104 |
| P1886 | CONNECTOR | SEAT 2 RH | 103644-7 | 4 1038 |
| P1887A | CONNECTOR | PNL E1658 | 103644-7 | 1004 1104 |
| P1888A | CONNECTOR | PNL E1668A | 103957-3 | 1004 1104 |
| P188-BS | BACKSHELL | P188 CONNECTOR | M85049-31-18N | 1004 1104 |
| P188-BS | BACKSHELL | P188 CONNECTOR | M85049/31-18N | 1004 1007 |
| P1891 | CONNECTOR | INTERF PNL 1 LEFT | 206044-1 | 1004 1104 |
| P1891-CP | CABLE CLAMP | P1891 CONNECTOR | 206070-1 | 1004 1104 |
| P1891-PIN | PIN | P1891 CONNECTOR | 66103-1 | 1004 1104 |
| P1892 | CONNECTOR | ELECT PNL 1 LEFT | 103957-1 | 1004 1104 |
| P1892A | CONNECTOR | EL PNL 1 LEFT ARM | 103957-1 | 1004 1104 |
| P1894 | CONNECTOR | PNL E1633 | 103644-9 | 1004 1104 |
| P1895A | CONNECTOR | PNL E1671A | 103644-5 | 1004 1104 |
| P1896A | CONNECTOR | PNL E1641 | 103644-7 | 1004 1104 |

| CODE | NOMENCLATURE | LOCATION | PART NUMBER | EFF. |
|---|---|---|---|---|
| P1901 | CONNECTOR | INTERF PNL 3 RIGHT | 206044-1 | 1004 1104 |
| P1901-CP | CABLE CLAMP | P1901 CONNECTOR | 206070-1 | 1004 1104 |
| P1901-PIN | PIN | P1901 CONNECTOR | 66103-1 | 1004 1104 |
| P1902 | CONNECTOR | ELECT PNL 3 RIGHT | 103957-1 | 1004 1104 |
| P1902A | CONNECTOR | EL PNL 3 RIGHT ARM | 103957-1 | 1004 1104 |
| P1903 | CONNECTOR | PNL E1636 | 103644-5 | 1004 1104 |
| P1907A | CONNECTOR | SEAT 3 RH | 103957-3 | 1039 1104 |
| P1908 | CONNECTOR | PNL E1666 | 103957-3 | 1004 1104 |
| P1908A | CONNECTOR | PNL E1666A | 103957-3 | 1004 1104 |
| P191 | CONNECTOR | FLAP CONT PNL | MS3476L16-26S | 1004 1104 |
| P1911 | CONNECTOR | INTERF PNL 4 LEFT | 206044-1 | 1004 1104 |
| P1911-CP | CABLE CLAMP | P1911 CONNECTOR | 206070-1 | 1004 1104 |
| P1911-PIN | PIN | P1911 CONNECTOR | 66103-1 | 1004 1104 |
| P1912 | CONNECTOR | ELECT PNL 4 LEFT | 103957-1 | 1004 1104 |
| P1912A | CONNECTOR | PNL E1665A | 103957-1 | 1004 1104 |
| P1913 | CONNECTOR | PNL E1639 | 103644-5 | 1004 1104 |
| P1914 | CONNECTOR | INTERF GALLEY | 206044-1 | 1004 1104 |
| P1914-CP | CABLE CLAMP | P1914 CONNECTOR | 206070-1 | 1004 1104 |
| P1914-PIN | PIN | P1914 CONNECTOR | 66099-1 | 1004 1104 |
| P1914-PIN | PIN | P1914 CONNECTOR | 66103-1 | 1004 1104 |
| P1916A | CONNECTOR | PNL E1665A | 103957-3 | 1004 1104 |
| P1917A | CONNECTOR | SEAT 3 LH - VIP | 103957-3 | 1004 1104 |
| P191-BS | BACKSHELL | P191 CONNECTOR | M85049-31-16N | 1004 1104 |
| P191-BS | BACKSHELL | P191 CONNECTOR | M85049/31-16N | 1004 1007 |
| P1921 | CONNECTOR | INTERF PNL VANITY | 206044-1 | 1004 1104 |
| P1921-CP | CABLE CLAMP | P1921 CONNECTOR | 206070-1 | 1004 1104 |
| P1921-PIN | PIN | P1921 CONNECTOR | 66103-1 | 1004 1104 |
| P1922 | CONNECTOR | ELECT PNL VANITY | 103957-1 | 1004 1104 |
| P1923 | CONNECTOR | PNL E1634 | 103644-5 | 1004 1104 |
| P1924 | CONNECTOR | INTERF ARMREST | 206044-1 | 1004 1104 |
| P1924-CP | CABLE CLAMP | P1924 CONNECTOR | 206070-1 | 1004 1104 |
| P1924-PIN | PIN | P1924 CONNECTOR | 66103-1 | 1004 1104 |

| CODE | NOMENCLATURE | LOCATION | PART NUMBER | EFF. |
|---|---|---|---|---|
| P1925 | CONNECTOR | INTERF ARMREST | 206044-1 | 1004 1104 |
| P1925-CP | CABLE CLAMP | P1925 CONNECTOR | 206070-1 | 1004 1104 |
| P1925-PIN | PIN | P1925 CONNECTOR | 66103-1 | 1004 1104 |
| P1927 | CONNECTOR | PNL E1926 | 103957-3 | 1004 1104 |
| P1931 | CONNECTOR | INTERF GALLEY | 206044-1 | 4 1036 |
| P1931 | CONNECTOR | GALLEY | 206429-1 | 1037 1104 |
| P1931-CP | CABLE CLAMP | P193 CONNECTOR | 206070-1 | 4 1036 |
| P1931-CP | CABLE CLAMP | P193 CONNECTOR | 206062-3 | 1037 1104 |
| P1931-PIN | PIN | P1931 CONNECTOR | 66099-1 | 1004 1104 |
| P1931-PIN | PIN | P1931 CONNECTOR | 66103-1 | 1004 1104 |
| P194 | CONNECTOR | R BLEED OVTEMP SW | MS3106R10SL4S | 1004 1104 |
| P195 | CONNECTOR | L BLEED OVTEMP SW | MS3106R10SL4S | 1004 1104 |
| P1953 | CONNECTOR | ENTRY PNL | 103644-7 | 1004 1104 |
| P1960 | CONNECTOR | VANITY LTS | 350809-1 | 1004 1104 |
| P1960-PIN | CONTACT | P1960 CONNECTOR | 350689-3 | 1004 1104 |
| P1961 | CONNECTOR | LAVATORY LTS | 350809-1 | 1004 1104 |
| P1961-PIN | CONTACT | P1961 CONNECTOR | 350689-3 | 1004 1104 |
| P1962 | CONNECTOR | CABIN LTS | 1-87270-0 | 1004 1104 |
| P1962-PIN | CONTACT | P1962 CONNECTOR | 87278-2 | 1004 1104 |
| P1963 | CONNECTOR | CABIN LTS | 350779-1 | 1004 1104 |
| P1963-PIN | CONTACT | P1963 CONNECTOR | 350690-7 | 1004 1104 |
| P1964 | CONNECTOR | CABIN LTS | 350779-1 | 1004 1104 |
| P1964-PIN | CONTACT | P1964 CONNECTOR | 350690-7 | 1004 1104 |
| P1965 | CONNECTOR | CABIN LTS | 350779-1 | 1004 1104 |
| P1965-PIN | CONTACT | P1965 CONNECTOR | 350690-7 | 1004 1104 |
| P1966 | CONNECTOR | CABIN LTS | 350779-1 | 1004 1104 |
| P1966-PIN | CONTACT | P196 CONNECTOR | 350690-7 | 1004 1104 |
| P1967 | CONNECTOR | CABIN LTS | 350779-1 | 1004 1104 |
| P1967-PIN | CONTACT | P1967 CONNECTOR | 350690-7 | 1004 1104 |
| P1968 | CONNECTOR | CABIN LTS | 350779-1 | 1004 1104 |

| CODE | NOMENCLATURE | LOCATION | PART NUMBER | EFF. |
|---|---|---|---|---|
| P1968-PIN | CONTACT | P1968 CONNECTOR | 350690-7 | 1004 1104 |
| P1969 | CONNECTOR | CABIN LTS | 350865-1 | 1004 1104 |
| P1969-PIN | CONTACT | P1969 CONNECTOR | 350690-3 | 1004 1104 |
| P1969-SLV | SLEEVE | P1969 CONNECTOR | 3185-32 | 1004 1104 |
| P1970 | CONNECTOR | CABIN LTS | 350865-1 | 1004 1104 |
| P1970-PIN | CONTACT | P1970 CONNECTOR | 350690-3 | 1004 1104 |
| P1970-SLV | SLEEVE | P1970 CONNECTOR | 3185-32 | 1004 1104 |
| P1971 | CONNECTOR | CABIN LTS | 350865-1 | 1004 1104 |
| P1971-PIN | CONTACT | P1971 CONNECTOR | 350690-3 | 1004 1104 |
| P1971-SLV | SLEEVE | P1971 CONNECTOR | 3185-32 | 1004 1104 |
| P1972 | CONNECTOR | CABIN LTS | 350865-1 | 1004 1104 |
| P1972-PIN | CONTACT | P1972 CONNECTOR | 350690-3 | 1004 1104 |
| P1972-SLV | SLEEVE | P1972 CONNECTOR | 3185-32 | 1004 1104 |
| P1973 | CONNECTOR | CABIN LTS | 350865-1 | 1004 1104 |
| P1973-PIN | CONTACT | P1973 CONNECTOR | 350690-3 | 1004 1104 |
| P1973-SLV | SLEEVE | P1973 CONNECTOR | 3185-32 | 1004 1104 |
| P1974 | CONNECTOR | CABIN LTS | 350865-1 | 1004 1104 |
| P1974-PIN | CONTACT | P1974 CONNECTOR | 350690-3 | 1004 1104 |
| P1974-SLV | SLEEVE | P1974 CONNECTOR | 3185-32 | 1004 1104 |
| P1975 | CONNECTOR | VANITY LTS | 350865-1 | 1004 1104 |
| P1975-PIN | CONTACT | P1975 CONNECTOR | 350690-3 | 1004 1104 |
| P1975-SLV | SLEEVE | P1975 CONNECTOR | 3185-32 | 1004 1104 |
| P1976 | CONNECTOR | LAVATORY LTS | 350865-1 | 1004 1104 |
| P1976-PIN | CONTACT | P1976 CONNECTOR | 350690-3 | 1004 1104 |
| P1976-SLV | SLEEVE | P1976 CONNECTOR | 3185-32 | 1004 1104 |
| P1994 | CONNECTOR | LAVATORY LTS | 350865-1 | 1004 1104 |
| P1994-PIN | CONTACT | P1994 CONNECTOR | 350690-3 | 1004 1104 |

| CODE | NOMENCLATURE | LOCATION | PART NUMBER | EFF. |
|---|---|---|---|---|
| P1994-SLV | SLEEVE | P1994 CONNECTOR | 3185-32 | 1004 1104 |
| P1995 | CONNECTOR | LAVATORY LTS | 350865-1 | 1004 1104 |
| P1995-PIN | CONTACT | P1995 CONNECTOR | 350690-3 | 1004 1104 |
| P1995-SLV | SLEEVE | P1995 CONNECTOR | 3185-32 | 1004 1104 |
| P1-LB | LIPPED BOOT | P1 CONNECTOR | 222K121-25 | 1083 1104 |
| P1-SBA | SHRINK BOOT | P1 CONNECTOR | 310DS002M08 | 1083 1104 |
| P2 | CONNECTOR | R GENERATOR | MS3116F8-3S | 1004 1104 |
| P200 | CONNECTOR | P/R VALVE | MS3116F8-3S | 1004 1104 |
| P202 | CONNECTOR | R FWD PRESS BHD | MS3476L20-39P | 1004 1100 |
| P202-BS | BACKSHELL | P202 CONNECTOR | M85049-31-20N | 1004 1100 |
| P202-BS | BACKSHELL | P202 CONNECTOR | M85049/31-20N | 1004 1104 |
| P203 | CONNECTOR | L FWD PRESS BHD | MS3476L20-39P | 1004 1100 |
| P203-BS | BACKSHELL | P203 CONNECTOR | M85049-31-20N | 1004 1100 |
| P203-BS | BACKSHELL | P203 CONNECTOR | M85049/31-20N | 1004 1104 |
| P204 | CONNECTOR | AURAL WRN BOX | M24308-2-283 | 1004 1104 |
| P204-HD | HOOD | P204 CONNECTOR | D-25-000-K-VL | 1004 1104 |
| P204-HD | HOOD | P204 CONNECTOR | D25-000KVL | 1004 1104 |
| P204-SK | SOCKET | P204 CONNECTOR | M39029-63-368 | 1004 1104 |
| P205 | CONNECTOR | BLEED DUCT LIM SW | MS3106R10SL4S | 1004 1104 |
| P207 | CONNECTOR | TRIM SWITCH PNL | MS3476L16-26P | 1004 1104 |
| P207-BS | BACKSHELL | P207 CONNECTOR | M85049-31-16N | 1004 1104 |
| P21 | CONNECTOR | L SHUTOFF VALVE | MS3476L14-12S | 1004 1104 |
| P212 | CONNECTOR | R WING ANTI ICE | MS3476L10-6S | 1004 1104 |
| P212-BS | BACKSHELL | P212 CONNECTOR | M85049-31-10N | 1004 1082 |
| P212-BS | BACKSHELL | P212 CONNECTOR | M85049/31-10N | 1004 1104 |
| P212-LB | LIPPED BOOT | P212 CONNECTOR | 222K132-25 | 1083 1104 |
| P212-SBA | SHRINK BOOT | P212 CONNECTOR | M85049/60-1N10 | 1083 1104 |
| P213 | CONNECTOR | L WING ANTI ICE | MS3476L10-6S | 1004 1104 |
| P213-BS | BACKSHELL | P213 CONNECTOR | M85049/31-10N | 1004 1104 |
| P213-BS | BACKSHELL | P213 CONNECTOR | M85049-31-10N | 1004 1082 |
| P213-LB | LIPPED BOOT | P213 CONNECTOR | 222K132-25 | 1083 1104 |
| P213-SBA | SHRINK BOOT | P213 CONNECTOR | M85049/60-1N10 | 1083 1104 |
| P214 | CONNECTOR | REFUELING SYST. | MS3106R10SL4S | 1004 1104 |
| P215 | CONNECTOR | TANK XFEED | MS3476L10-6S | 1004 1104 |
| P215-BS | BACKSHELL | P215 CONNECTOR | M85049-31-10N | 1004 1104 |
| P215-BS | BACKSHELL | P215 CONNECTOR | M85049/31-10N | 1004 1104 |
| P216 | CONNECTOR | R HIGH PRESSURE | MS3106R10SL3S | 1004 1082 |
| P216 | CONNECTOR | R HIGH PRESSURE | MS3106K10SL3S | 1083 1104 |

| CODE | NOMENCLATURE | LOCATION | PART NUMBER | EFF. |
|---|---|---|---|---|
| P216-SBA | SHRINK BOOT | P216 CONNECTOR | 310BS002Z111 | 1083 1104 |
| P217 | CONNECTOR | L HIGH PRESSURE | MS3106K10SL3S | 1083 1104 |
| P217 | CONNECTOR | L HIGH PRESSURE | MS3106R10SL3S | 1004 1082 |
| P217-SBA | SHRINK BOOT | P217 CONNECTOR | 310BS002Z111 | 1083 1104 |
| P218 | CONNECTOR | R LOW PRESSURE | MS3126F8-33S | 1004 1082 |
| P218 | CONNECTOR | R LOW PRESSURE | D38999/26KA98SN | 1083 1104 |
| P218-SBA | SHRINK BOOT | P218 CONNECTOR | 310HS001Z109-204 | 1083 1104 |
| P219 | CONNECTOR | L LOW PRESSURE | D38999/26KA98SN | 1083 1104 |
| P219 | CONNECTOR | L LOW PRESSURE | MS3126F8-33S | 1004 1082 |
| P219-SBA | SHRINK BOOT | P219 CONNECTOR | 310HS001Z109-204 | 1083 1104 |
| P21-BS | BACKSHELL | P21- CONNECTOR | M85049-31-14N | 1004 1082 |
| P21-LB | LIPPED BOOT | P21 CONNECTOR | 222K142-25 | 1083 1104 |
| P21-SBA | SHRINK BOOT | P21 CONNECTOR | M85049/60-1N14 | 1083 1104 |
| P22 | CONNECTOR | R SHUTOFF VALVE | MS3476L14-12S | 1004 1104 |
| P220 | CONNECTOR | R DUMP VALVE | MS3106R10SL3S | 1004 1082 |
| P220 | CONNECTOR | R DUMP VALVE | MS3106K10SL3S | 1083 1104 |
| P220-SBA | SHRINK BOOT | P220 CONNECTOR | 310BS002Z111 | 1083 1104 |
| P221 | CONNECTOR | L DUMP VALVE | MS3106R10SL3S | 1004 1082 |
| P221 | CONNECTOR | L DUMP VALVE | MS3106K10SL3S | 1083 1104 |
| P221-SBA | SHRINK BOOT | P221 CONNECTOR | 310BS002Z111 | 1083 1104 |
| P222 | CONNECTOR | ENGINE CONTROL PNL | MS3476L16-26S | 1004 1104 |
| P222-BS | BACKSHELL | P222 CONNECTOR | M85049-31-16N | 1004 1104 |
| P223 | CONNECTOR | L GOVERNOR COIL | MS3106R10SL3S | 4 1082 |
| P223 | CONNECTOR | L GOVERNOR COIL | MS3456L10SL3S | 1083 1104 |
| P223-SBA | SHRINK BOOT | P223 CONNECTOR | M85049/60-1N10 | 1083 1104 |
| P224 | CONNECTOR | R GOVERNOR COIL | MS3456L10SL-3S | 1083 1104 |
| P224 | CONNECTOR | R GOVERNOR COIL | MS3106R10SL3S | 4 1082 |
| P224-SBA | SHRINK BOOT | P224 CONNECTOR | M85049/60-1N10 | 1083 1104 |
| P225 | CONNECTOR | PROP SYNCH | 1631-028 | 1004 1104 |
| P226 | CONNECTOR | R OIL COOLING | MS3106R10SL4S | 1004 1082 |
| P226 | CONNECTOR | R OIL COOLING | MS3456L10SL-4S | 1083 1104 |
| P226-SBA | SHRINK BOOT | P226 CONNECTOR | M85049/60-1N10 | 1083 1104 |
| P227 | CONNECTOR | L OIL COOLING | MS3106R10SL4S | 1004 1082 |
| P227 | CONNECTOR | L OIL COOLING | MS3456L10SL4S | 1083 1104 |
| P227-SBA | SHRINK BOOT | P227 CONNECTOR | M85049/60-1N10 | 1083 1104 |
| P228 | CONNECTOR | LTS DOOR ACTUATOR | MS3476L10-6S | 1004 1104 |
| P228-BS | BACKSHELL | P228 CONNECTOR | M85049-31-10N | 1004 1104 |
| P229 | CONNECTOR | DIFF PRESSURE | MS3106R10SL3S | 1004 1104 |
| P22-BS | BACKSHELL | P22 CONNECTOR | M85049-31-14N | 1004 1082 |
| P22-LB | LIPPED BOOT | P22 CONNECTOR | 222K142-25 | 1083 1104 |

| CODE | NOMENCLATURE | LOCATION | PART NUMBER | EFF. |
|---|---|---|---|---|
| P22-SBA | SHRINK BOOT | P22 CONNECTOR | M85049/60-1N14 | 1083 1104 |
| P23 | CONNECTOR | CROSSFEED VALVE | MS3476L14-12S | 1004 1104 |
| P23-BS | BACKSHELL | P23 CONNECTOR | M85049-31-14N | 1004 1082 |
| P23-LB | LIPPED BOOT | P23 CONNECTOR | 222K142-25 | 1083 1104 |
| P23-SBA | SHRINK BOOT | P23 CONNECTOR | M85049/60-1N14 | 1083 1104 |
| P24 | CONNECTOR | R MAIN PUMP PRESS SW | MS3126F8-33S | 1004 1104 |
| P25 | CONNECTOR | L MAIN PUMP PRESS SW | MS3126F8-33S | 1004 1104 |
| P252 | CONNECTOR | SECONDARY INVERTER | MS3106R18-9S | 1004 1104 |
| P254 | CONNECTOR | AC CONTROL UNIT (RH) | MS3476L14-19SW | 1004 1104 |
| P254-BS | BACKSHELL | P254 CONNECTOR | M85049-31-14N | 1004 1104 |
| P254-BS | BACKSHELL | P254 CONNECTOR | M85049/31-14N | 1004 1104 |
| P255 | CONNECTOR | ICE DETECTOR | MS3476L12-10S | 1004 1104 |
| P255-BS | BACKSHELL | P255 CONNECTOR | M85049-31-12N | 1004 1104 |
| P258 | CONNECTOR | TRIM INDICATOR | MS3476L14-19S | 1004 1104 |
| P258-BS | BACKSHELL | P258 CONNECTOR | M85049-31-14N | 1004 1104 |
| P26 | CONNECTOR | MAIN JUNCTION BOX | MS3476L22-41SW | 1004 1104 |
| P260 | CONNECTOR | MASTER WRN/ CAUTION | MS3476L12-10S | 1004 1104 |
| P260-BS | BACKSHELL | P260 CONNECTOR | M85049-31-12N | 1004 1104 |
| P261 | CONNECTOR | AC CONTROL UNIT (LH) | MS3476L14-19S | 1004 1104 |
| P261-BS | BACKSHELL | P261 CONNECTOR | M85049-31-14N | 1004 1104 |
| P261-BS | BACKSHELL | P261 CONNECTOR | M85049/31-14N | 1004 1104 |
| P262 | CONNECTOR | PRIMARY INVERTER | MS3106R18-9S | 1004 1104 |
| P263 | CONNECTOR | GLARESHIELD | MS3476L14-19S | 1004 1104 |
| P263-BS | BACKSHELL | P263 CONNECTOR | M85049-31-14N | 1004 1104 |
| P263-BS | BACKSHELL | P263 CONNECTOR | M85049/31-14N | 1004 1104 |
| P265 | CONNECTOR | L OIL COOL AN ICE VA | MS3106R10SL4S | 1004 1100 |
| P265 | CONNECTOR | L OIL COOL AN ICE VA | MS3106R10SL4S | 1102 1104 |
| P265 | CONNECTOR | L OIL COOL AN ICE VA | MS3456L10SL-4S | 1101 1101 |
| P265-BS | BACKSHELL | P265 CONNECTOR | M85049/60-1N10 | 1101 1101 |
| P265-SLB | STRAIGHT LIPPED BOOT | P265 CONNECTOR | 202K132-25 | 1101 1101 |
| P266 | CONNECTOR | R OIL COOL AN ICE VA | MS3456L10SL-4S | 1083 1104 |

| CODE | NOMENCLATURE | LOCATION | PART NUMBER | EFF. |
|---|---|---|---|---|
| P266 | CONNECTOR | R OIL COOL AN ICE VA | MS3106R10SL4S | 1004 1082 |
| P266-LB | LIPPED BOOT | P266 CONNECTOR | 202K132-25 | 1083 1104 |
| P266-SBA | SHRINK BOOT | P266 CONNECTOR | M85049/60-1N10 | 1083 1104 |
| P267 | CONNECTOR | FWD FIREWALL | D38999/26KC98PN | 1083 1104 |
| P267 | CONNECTOR | FWD FIREWALL | MS3476L12-10P | 1004 1082 |
| P267-BS | BACKSHELL | P267 CONNECTOR | M85049-31-12N | 1004 1082 |
| P267-BS | BACKSHELL | P267 CONNECTOR | M85049/31-12N | 1004 1104 |
| P267-LB | LIPPED BOOT | P267 CONNECTOR | 202K142-25 | 1083 1104 |
| P267-SBA | SHRINK BOOT | P267 CONNECTOR | 310HS001Z113-204 | 1083 1104 |
| P268 | CONNECTOR | R WING ANTI ICE | MS3476L14-19S | 1004 1104 |
| P268-BS | BACKSHELL | P268 CONNECTOR | M85049/31-14N | 1004 1104 |
| P268-BS | BACKSHELL | P268 CONNECTOR | M85049-31-14N | 1004 1104 |
| P269 | CONNECTOR | L WING ANTI ICE | MS3476L14-19S | 1004 1104 |
| P269-BS | BACKSHELL | P269 CONNECTOR | M85049-31-14N | 1004 1104 |
| P269-BS | BACKSHELL | P269 CONNECTOR | M85049/31-14N | 1004 1104 |
| P26-BS | BACKSHELL | P26 CONNECTOR | M85049/31-22N | 1004 1104 |
| P26-BS | BACKSHELL | P26 CONNECTOR | M85049-31-22N | 1004 1104 |
| P27 | CONNECTOR | AFTER FS6000 | MS3476L24-61S | 1004 1100 |
| P271 | CONNECTOR | COCKPIT (LH) | MS3476L14-18S | 1046 1104 |
| P271 | CONNECTOR | COCKPIT (LH) | MS3476L14-18S | 1041 1044 |
| P271 | CONNECTOR | COCKPIT (LH) | MS3476L12-10S | 1045 1045 |
| P271 | CONNECTOR | COCKPIT (LH) | MS3476L12-10S | 1004 1040 |
| P271-BS | BACKSHELL | P271 CONNECTOR | M85049/31-12N | 1004 1104 |
| P271-BS | BACKSHELL | P271 CONNECTOR | M85049-31-12N | 1004 1040 |
| P271-BS | BACKSHELL | P271 CONNECTOR | M85049-31-12N | 1045 1045 |
| P271-BS | BACKSHELL | P271 CONNECTOR | M85049-31-14N | 1046 1104 |
| P271-BS | BACKSHELL | P271 CONNECTOR | M85049-31-14N | 1041 1044 |
| P272 | CONNECTOR | STALL STAP | MS3476L12-10S | 1004 1104 |
| P272-BS | BACKSHELL | P272 CONNECTOR | M85049/31-12N | 1004 1104 |
| P272-BS | BACKSHELL | P272 CONNECTOR | M85049-31-12N | 1004 1104 |
| P273 | CONNECTOR | DOOR SEAL PRESS SW | MS3126F8-33S | 1004 1104 |
| P274 | CONNECTOR | DOOR SEAL PRESS SW | MS3126F8-33S | 1004 1104 |
| P275 | CONNECTOR | ANTI-SKID CTRL BOX | MS3476L14-19S | 1004 1104 |
| P275-BS | BACKSHELL | P275 CONNECTOR | M85049-31-14N | 1004 1104 |
| P275-BS | BACKSHELL | P275 CONNECTOR | M85049/31-14N | 1004 1104 |
| P276 | CONNECTOR | ANTI-SKID VALVE | MS3126F8-33S | 1004 1104 |
| P279 | CONNECTOR | A/I MONITOR UNIT | MS3476L14-18S | 1004 1104 |
| P279-BS | BACKSHELL | P279 CONNECTOR | M85049-31-14N | 1004 1104 |

| CODE | NOMENCLATURE | LOCATION | PART NUMBER | EFF. |
|---|---|---|---|---|
| P27-BS | BACKSHELL | P27 CONNECTOR | M85049/31-24N | 1004 1104 |
| P27-BS | BACKSHELL | P27 CONNECTOR | M85049-31-24N | 1004 1100 |
| P27-PIN | CONTACT | P27 CONNECTOR | M39029/10-141 | 1004 1104 |
| P27-PIN | CONTACT | P27 CONNECTOR | M39029-10-141 | 1004 1100 |
| P27-PIN | CONTACT | P27 CONNECTOR | M39029/10-140 | 1004 1104 |
| P27-PIN | CONTACT | P27 CONNECTOR | M39029-10-140 | 1004 1100 |
| P28 | CONNECTOR | AFTER FS6000 | MS3476L24-61S | 1004 1100 |
| P280 | CONNECTOR | ANTI-SKID PNL | MS3476L12-10S | 1004 1104 |
| P280-BS | BACKSHELL | P280 CONNECTOR | M85049-31-12N | 1004 1104 |
| P280-BS | BACKSHELL | P280 CONNECTOR | M85049/31-12N | 1004 1104 |
| P281 | CONNECTOR | FAN MONITOR | 371-0213-010 | 1004 1104 |
| P281-PIN | CONTACT | P281 CONNECTOR | 371-0213-110 | 1004 1104 |
| P281-SRF | STRAIN RELIEF | P281 CONNECTOR | 371-0399-240 | 1004 1104 |
| P282 | CONNECTOR | R AIR DIFFUSER | MS3476L10-6S | 1004 1022 |
| P282-BS | BACKSHELL | P282 CONNECTOR | M85049-31-10N | 1004 1022 |
| P283 | CONNECTOR | L AIR DIFFUSER | MS3476L10-6S | 1004 1022 |
| P283-BS | BACKSHELL | P283 CONNECTOR | M85049-31-10N | 1004 1022 |
| P284 | CONNECTOR | PWR SUPPLY DIMMER | MS3106R16S1S | 1006 1104 |
| P286 | CONNECTOR | COPILOT MASTER | MS3476L12-10S | 1004 1104 |
| P286-BS | BACKSHELL | P286 CONNECTOR | M85049-31-12N | 1004 1104 |
| P287 | CONNECTOR | DUAL MASTER COUPLER | MS3476L14-19S | 1004 1104 |
| P287-BS | BACKSHELL | P287 CONNECTOR | M85049-31-14N | 1004 1104 |
| P28-BS | BACKSHELL | P28- CONNECTOR | M85049/31-24N | 1004 1104 |
| P28-BS | BACKSHELL | P28- CONNECTOR | M85049-31-24N | 1004 1100 |
| P28-PIN | CONTACT | P28 CONNECTOR | M39029-10-140 | 1004 1100 |
| P28-PIN | CONTACT | P28 CONNECTOR | M39029-10-141 | 1004 1100 |
| P28-PIN | CONTACT | P28 CONNECTOR | M39029/10-140 | 1004 1104 |
| P28-PIN | CONTACT | P28 CONNECTOR | M39029/10-141 | 1004 1104 |
| P29 | CONNECTOR | AFTER FS6000 | MS3476L22-41S | 1004 1104 |
| P296 | CONNECTOR | MAGNETIC COMPASS | 1-640508-0 | 1023 1104 |
| P296-PIN | CONTACT | P296 CONNECTOR | 640545-2 | 1023 1104 |
| P297 | CONNECTOR | TOP ANTI-COLLISION | MS3476L12-10P | 1034 1104 |
| P297-BS | BACKSHELL | P297 CONNECTOR | M85049-31-12N | 1034 1104 |
| P29-BS | BACKSHELL | P29 CONNECTOR | M85049/31-22N | 1004 1104 |
| P29-BS | BACKSHELL | P29 CONNECTOR | M85049-31-22N | 1004 1104 |
| P2-LB | LIPPED BOOT | P2 CONNECTOR | 222K121-25 | 1083 1104 |
| P2-SBA | SHRINK BOOT | P2 CONNECTOR | 310DS002M08 | 1083 1104 |
| P3 | CONNECTOR | L CONTROL UNIT | MS3476L24-31S | 1004 1104 |

| CODE | NOMENCLATURE | LOCATION | PART NUMBER | EFF. |
|---|---|---|---|---|
| P30 | CONNECTOR | AFTER FS6000 | MS3476L22-41S | 1004 1100 |
| P300 | CONNECTOR | HEATER SYSTEM | DCMA37S | 1041 1042 |
| P300 | CONNECTOR | HEATER SYSTEM | DCMA37S | 1052 1053 |
| P300 | CONNECTOR | HEATER SYSTEM | DCMA37S | 1055 1056 |
| P300 | CONNECTOR | HEATER SYSTEM | DCMA37S | 1058 1104 |
| P300-BS | BACKSHELL | P300 CONNECTOR | DC24660 | 1041 1042 |
| P300-BS | BACKSHELL | P300 CONNECTOR | DC24660 | 1052 1053 |
| P300-BS | BACKSHELL | P300 CONNECTOR | DC24660 | 1046 1049 |
| P300-BS | BACKSHELL | P300 CONNECTOR | DC24660 | 1044 1044 |
| P300-SLK | SCREW LOCK | P300 CONNECTOR | D20419-16 | 1041 1042 |
| P300-SLK | SCREW LOCK | P300 CONNECTOR | D20419-16 | 1058 1104 |
| P300-SLK | SCREW LOCK | P300 CONNECTOR | D20419-16 | 1055 1056 |
| P300-SLK | SCREW LOCK | P300 CONNECTOR | D20419-16 | 1052 1053 |
| P300-SLK | SCREW LOCK | P300 CONNECTOR | D20419-16 | 1044 1044 |
| P300-SLK | SCREW LOCK | P300 CONNECTOR | D20419-16 | 1046 1049 |
| P301 | CONNECTOR | HEATER SYSTEM | DCMA37S | 1046 1049 |
| P301 | CONNECTOR | HEATER SYSTEM | DCMA37S | 1041 1042 |
| P301 | CONNECTOR | HEATER SYSTEM | DCMA37S | 1058 1104 |
| P301 | CONNECTOR | HEATER SYSTEM | DCMA37S | 1055 1056 |
| P301 | CONNECTOR | HEATER SYSTEM | DCMA37S | 1044 1044 |
| P301 | CONNECTOR | HEATER SYSTEM | DCMA37S | 1052 1053 |
| P301-BS | BACKSHELL | P301 CONNECTOR | DC24660 | 1044 1044 |
| P301-BS | BACKSHELL | P301 CONNECTOR | DC24660 | 1046 1049 |
| P301-BS | BACKSHELL | P301 CONNECTOR | DC24660 | 1052 1053 |
| P301-BS | BACKSHELL | P301 CONNECTOR | DC24660 | 1055 1056 |
| P301-BS | BACKSHELL | P301 CONNECTOR | DC24660 | 1041 1042 |
| P301-BS | BACKSHELL | P301 CONNECTOR | DC24660 | 1058 1104 |
| P301-SLK | SCREW LOCK | P301 CONNECTOR | D20419-16 | 1058 1104 |
| P301-SLK | SCREW LOCK | P301 CONNECTOR | D20419-16 | 1055 1056 |
| P301-SLK | SCREW LOCK | P301 CONNECTOR | D20419-16 | 1052 1053 |
| P301-SLK | SCREW LOCK | P301 CONNECTOR | D20419-16 | 1046 1049 |
| P301-SLK | SCREW LOCK | P301 CONNECTOR | D20419-16 | 1044 1044 |
| P301-SLK | SCREW LOCK | P301 CONNECTOR | D20419-16 | 1041 1042 |
| P302 | CONNECTOR | HEATER SYSTEM | MS3116E8-4S | 1041 1042 |
| P302 | CONNECTOR | HEATER SYSTEM | MS3116E8-4S | 1058 1104 |
| P302 | CONNECTOR | HEATER SYSTEM | MS3116E8-4S | 1044 1044 |
| P302 | CONNECTOR | HEATER SYSTEM | MS3116E8-4S | 1055 1056 |
| P302 | CONNECTOR | HEATER SYSTEM | MS3116E8-4S | 1046 1049 |
| P302 | CONNECTOR | HEATER SYSTEM | MS3116E8-4S | 1052 1053 |
| P303 | CONNECTOR | HEATER SYSTEM | MS3116E8-4S | 1052 1053 |
| P303 | CONNECTOR | HEATER SYSTEM | MS3116E8-4S | 1041 1042 |

| CODE | NOMENCLATURE | LOCATION | PART NUMBER | EFF. |
|---|---|---|---|---|
| P303 | CONNECTOR | HEATER SYSTEM | MS3116E8-4S | 1046 1049 |
| P303 | CONNECTOR | HEATER SYSTEM | MS3116E8-4S | 1058 1104 |
| P303 | CONNECTOR | HEATER SYSTEM | MS3116E8-4S | 1055 1056 |
| P303 | CONNECTOR | HEATER SYSTEM | MS3116E8-4S | 1044 1044 |
| P304 | CONNECTOR | HEATER SYSTEM | 1-480698-0 | 1041 1042 |
| P304 | CONNECTOR | HEATER SYSTEM | 1-480698-0 | 1044 1044 |
| P304 | CONNECTOR | HEATER SYSTEM | 1-480698-0 | 1046 1049 |
| P304 | CONNECTOR | HEATER SYSTEM | 1-480698-0 | 1052 1053 |
| P304 | CONNECTOR | HEATER SYSTEM | 1-480698-0 | 1055 1056 |
| P304 | CONNECTOR | HEATER SYSTEM | 1-480698-0 | 1058 1104 |
| P304-SK | SOCKET | P304 CONNECTOR | 350689-1 | 1046 1049 |
| P304-SK | SOCKET | P304 CONNECTOR | 350689-1 | 1041 1042 |
| P304-SK | SOCKET | P304 CONNECTOR | 350689-1 | 1058 1104 |
| P304-SK | SOCKET | P304 CONNECTOR | 350689-1 | 1052 1053 |
| P304-SK | SOCKET | P304 CONNECTOR | 350689-1 | 1055 1056 |
| P304-SK | SOCKET | P304 CONNECTOR | 350689-1 | 1044 1044 |
| P305 | CONNECTOR | HEATER SYSTEM | 1-480698-0 | 1044 1044 |
| P305 | CONNECTOR | HEATER SYSTEM | 1-480698-0 | 1055 1056 |
| P305 | CONNECTOR | HEATER SYSTEM | 1-480698-0 | 1046 1049 |
| P305 | CONNECTOR | HEATER SYSTEM | 1-480698-0 | 1041 1042 |
| P305 | CONNECTOR | HEATER SYSTEM | 1-480698-0 | 1058 1104 |
| P305 | CONNECTOR | HEATER SYSTEM | 1-480698-0 | 1052 1053 |
| P305-SK | SOCKET | P305 CONNECTOR | 350689-1 | 1058 1104 |
| P305-SK | SOCKET | P305 CONNECTOR | 350689-1 | 1055 1056 |
| P305-SK | SOCKET | P305 CONNECTOR | 350689-1 | 1052 1053 |
| P305-SK | SOCKET | P305 CONNECTOR | 350689-1 | 1046 1049 |
| P305-SK | SOCKET | P305 CONNECTOR | 350689-1 | 1041 1042 |
| P305-SK | SOCKET | P305 CONNECTOR | 350689-1 | 1044 1044 |
| P306 | CONNECTOR | HEATER SYSTEM | MS3116E8-4S | 1055 1056 |
| P306 | CONNECTOR | HEATER SYSTEM | MS3116E8-4S | 1041 1042 |
| P306 | CONNECTOR | HEATER SYSTEM | MS3116E8-4S | 1044 1044 |
| P306 | CONNECTOR | HEATER SYSTEM | MS3116E8-4S | 1052 1053 |
| P306 | CONNECTOR | HEATER SYSTEM | MS3116E8-4S | 1058 1104 |
| P306 | CONNECTOR | HEATER SYSTEM | MS3116E8-4S | 1046 1049 |
| P307 | CONNECTOR | HEATER SYSTEM | MS3116E8-4S | 1044 1044 |
| P307 | CONNECTOR | HEATER SYSTEM | MS3116E8-4S | 1055 1056 |
| P307 | CONNECTOR | HEATER SYSTEM | MS3116E8-4S | 1046 1049 |
| P307 | CONNECTOR | HEATER SYSTEM | MS3116E8-4S | 1041 1042 |
| P307 | CONNECTOR | HEATER SYSTEM | MS3116E8-4S | 1058 1104 |
| P307 | CONNECTOR | HEATER SYSTEM | MS3116E8-4S | 1052 1053 |
| P308 | CONNECTOR | DUCT LIM SW CABIN | 1-480698-0 | 1041 1104 |

| CODE | NOMENCLATURE | LOCATION | PART NUMBER | EFF. |
|---|---|---|---|---|
| P308-SK | SOCKET | P308 CONNECTOR | 350689-1 | 1041 1104 |
| P309 | CONNECTOR | DUCT LIM SW CABIN | 1-480698-0 | 1041 1104 |
| P309-SK | SOCKET | P309 CONNECTOR | 350689-1 | 1041 1104 |
| P30-BS | BACKSHELL | P30 CONNECTOR | M85049-31-22N | 1004 1100 |
| P30-BS | BACKSHELL | P30 CONNECTOR | M85049/31-22N | 1004 1104 |
| P31 | CONNECTOR | AFTER FS6000 | MS3476L22-41SW | 1004 1100 |
| P310 | CONNECTOR | AUXILIARY 1 | 206429-1 | 1004 1104 |
| P310-CP | CABLE CLAMP | P310 CONNECTOR | 206062-3 | 1004 1104 |
| P310-PIN | PIN | P310 CONNECTOR | 66099-1 | 1004 1104 |
| P311 | CONNECTOR | AUXILIARY 1 | MS3476L14-5S | 1004 1104 |
| P311-BS | BACKSHELL | P311 CONNECTOR | M85049-31-14N | 1004 1104 |
| P315 | CONNECTOR | AUXILIARY 1 | 206429-1 | 1004 1104 |
| P315-CP | CABLE CLAMP | P315 CONNECTOR | 206062-3 | 1004 1104 |
| P315-PIN | PIN | P315 CONNECTOR | 66099-1 | 1004 1104 |
| P317 | CONNECTOR | L ENG CHIP DETECOR | MS3456L12S3S | 1073 1081 |
| P317 | CONNECTOR | L ENG CHIP DETECOR | MS3456L12S3S | 1083 1104 |
| P317-BS | BACKSHELL | P317 CONNECTOR | M85049/60-1N12 | 1073 1081 |
| P317-BS | BACKSHELL | P317 CONNECTOR | M85049/60-1N12 | 1083 1104 |
| P318 | CONNECTOR | R ENG CHIP DETECOR | MS3456L12S3S | 1083 1104 |
| P318 | CONNECTOR | R ENG CHIP DETECOR | MS3456L12S3S | 1073 1081 |
| P318-BS | BACKSHELL | P318 CONNECTOR | M85049/60-1N12 | 1073 1081 |
| P318-BS | BACKSHELL | P318 CONNECTOR | M85049/60-1N12 | 1083 1104 |
| P31-BS | BACKSHELL | P31 CONNECTOR | M85049-31-22N | 1004 1100 |
| P31-BS | BACKSHELL | P33 CONNECTOR | M85049/31-22N | 1004 1104 |
| P32 | CONNECTOR | AFTER FS6000 | MS3456L20-14S | 1004 1100 |
| P32-BS | BACKSHELL | P32 CONNECTOR | MS3416-20EN | 1004 1100 |
| P33 | CONNECTOR | AFTER FS6000 | MS3456L20-14S | 1004 1100 |
| P33-BS | BACKSHELL | P33 CONNECTOR | MS3416-20EN | 1004 1100 |
| P34 | CONNECTOR | AFTER FS6000 | MS3476L22-41SW | 1004 1100 |
| P34-BS | BACKSHELL | P34 CONNECTOR | M85049-31-22N | 1004 1100 |
| P35 | CONNECTOR | AFTER FS6000 | MS3476L20-41S | 1004 1104 |
| P35-BS | BACKSHELL | P35 CONNECTOR | M85049-31-20N | 1004 1104 |
| P35-BS | BACKSHELL | P35 CONNECTOR | M85049/31-20N | 1004 1104 |
| P36 | CONNECTOR | AFTER FS6000 | MS3476L20-41S | 1004 1104 |
| P36-BS | BACKSHELL | P36 CONNECTOR | M85049-31-20N | 1004 1104 |
| P36-BS | BACKSHELL | P36 CONNECTOR | M85049/31-20N | 1004 1007 |
| P37 | CONNECTOR | MAIN JUNCTION BOX | MS3476L22-41S | 1004 1104 |

| CODE | NOMENCLATURE | LOCATION | PART NUMBER | EFF. |
|---|---|---|---|---|
| P37-BS | BACKSHELL | P37 CONNECTOR | M85049-31-22N | 1004 1104 |
| P37-BS | BACKSHELL | P37 CONNECTOR | M85049/31-22N | 1004 1104 |
| P3-BS | BACKSHELL | P3 CONNECTOR | 85049/31-24N | 1004 1104 |
| P3-BS | BACKSHELL | P3 CONNECTOR | M85049-31-24N | 1004 1104 |
| P4 | CONNECTOR | R CONTROL UNIT | MS3476L24-31S | 1004 1104 |
| P42 | CONNECTOR | R FUEL FLOW IND | MS3476L14-12S | 1004 1104 |
| P42-BS | BACKSHELL | P42 CONNECTOR | M85049/31-14N | 1004 1104 |
| P42-BS | BACKSHELL | P42 CONNECTOR | M85049-31-14N | 1004 1104 |
| P43 | CONNECTOR | L FUEL FLOW IND | MS3476L14-12S | 1004 1104 |
| P43-BS | BACKSHELL | P43 CONNECTOR | M85049-31-14N | 1004 1104 |
| P43-BS | BACKSHELL | P43 CONNECTOR | M85049/31-14N | 1004 1104 |
| P46 | CONNECTOR | CAB TEMP CONTROLLER | MS3476L14-12S | 1004 1104 |
| P46-BS | BACKSHELL | P46 CONNECTOR | M85049-31-14N | 1004 1104 |
| P47 | CONNECTOR | DUCT TEMP SENSOR | MS3116F8-4S | 1004 1104 |
| P48 | CONNECTOR | BY PASS VALVE ACTR | MS3476L14-5S | 1004 1104 |
| P48-BS | BACKSHELL | P48 CONNECTOR | M85049-31-14N | 1004 1104 |
| P4-BS | BACKSHELL | P4 CONNECTOR | M85049-31-24N | 1004 1104 |
| P4-BS | BACKSHELL | P4 CONNECTOR | M85049/31-24N | 1004 1104 |
| P5 | CONNECTOR | L IGNITION SYSTEM | MS3106R12S3S | 1004 1082 |
| P5 | CONNECTOR | L IGNITION SYSTEM | MS3456L12S-3S | 1083 1104 |
| P50 | CONNECTOR | R DETECTOR | MS3456KT14S5S | 1004 1104 |
| P50-BS | BACKSHELL | P50 CONNECTOR | MS3416-14EN | 1004 1104 |
| P50-SBA | SHRINK BOOT | P50 CONNECTOR | M85049/60-1N14 | 1083 1104 |
| P51 | CONNECTOR | L DETECTOR | MS3456KT14S5S | 1004 1104 |
| P51-BS | BACKSHELL | P51 CONNECTOR | MS3416-14EN | 1004 1104 |
| P51-SBA | SHRINK BOOT | P51 CONNECTOR | M85049/60-1N14 | 1083 1104 |
| P55 | CONNECTOR | L OIL TEMP/PRESS IND | MS3476L14-19SW | 1004 1104 |
| P55-BS | BACKSHELL | P55 CONNECTOR | M85049/31-14N | 1004 1104 |
| P55-BS | BACKSHELL | P55 CONNECTOR | M85049-31-14N | 1004 1104 |
| P56 | CONNECTOR | R OIL TEMP/PRESS IND | MS3476L14-19SW | 1004 1104 |
| P56-BS | BACKSHELL | P56 CONNECTOR | M85049-31-14N | 1004 1104 |
| P56-BS | BACKSHELL | P56 CONNECTOR | M85049/31-14N | 1004 1104 |
| P57 | CONNECTOR | L BULBE | MS3106R12S3S | 1004 1082 |
| P57 | CONNECTOR | L BULBE | MS3456L12S-3S | 1083 1104 |
| P57-LB | LIPPED BOOT | P57 CONNECTOR | 222K142-25 | 1083 1104 |
| P57-SBA | SHRINK BOOT | P57 CONNECTOR | M85049/60-1N12 | 1083 1104 |

| CODE | NOMENCLATURE | LOCATION | PART NUMBER | EFF. |
|---|---|---|---|---|
| P58 | CONNECTOR | R BULBE | MS3456L12S-3S | 1083 1104 |
| P58 | CONNECTOR | R BULBE | MS3106R12S3S | 1004 1082 |
| P58-LB | LIPPED BOOT | P58 CONNECTOR | 222K142-25 | 1083 1104 |
| P58-SBA | SHRINK BOOT | P58 CONNECTOR | M85049/60-1N12 | 1083 1104 |
| P59 | CONNECTOR | L OIL PRESS XDCR | MS3116F8-4S | 1004 1104 |
| P59-SBA | SHRINK BOOT | P59 CONNECTOR | 310DS002M08 | 1083 1104 |
| P5-LB | LIPPED BOOT | P5 CONNECTOR | 222K142-25 | 1083 1104 |
| P5-SBA | SHRINK BOOT | P5 CONNECTOR | M85049/60-1N12 | 1083 1104 |
| P6 | CONNECTOR | BATTERY | MS25182-2 | 1004 1104 |
| P60 | CONNECTOR | R OIL PRESS XDCR | MS3116F8-4S | 1004 1104 |
| P601 | CONNECTOR | FWD PRESS BHD | MS3476L14-19S | 1004 1104 |
| P601-BS | BACKSHELL | P601 CONNECTOR | M85049/31-14N | 1004 1022 |
| P601-BS | BACKSHELL | P601 CONNECTOR | M85049-31-14N | 1004 1104 |
| P602 | CONNECTOR | FWD PRESS BHD | MS3476L14-19S | 1004 1104 |
| P602-BS | BACKSHELL | P602 CONNECTOR | M85049-31-14N | 1004 1104 |
| P602-BS | BACKSHELL | P602 CONNECTOR | M85049/31-14N | 1004 1104 |
| P603 | CONNECTOR | FWD PRESS BHD | MS27473E22F35PB | 1004 1104 |
| P603-BS | BACKSHELL | P603 CONNECTOR | M85049-27-22N | 1004 1104 |
| P603-BS | BACKSHELL | P603 CONNECTOR | M85049/27-22N | 1004 1022 |
| P604 | CONNECTOR | FWD PRESS BHD | MS27473E22F35PB | 1004 1104 |
| P604-BS | BACKSHELL | P604 CONNECTOR | M85049-27-22N | 1004 1104 |
| P604-BS | BACKSHELL | P604 CONNECTOR | M85049/27-22N | 1004 1104 |
| P605 | CONNECTOR | FWD PRESS BHD | MS27473E22F35PB | 1004 1104 |
| P605-BS | BACKSHELL | P605 CONNECTOR | M85049-27-22N | 1004 1104 |
| P605-BS | BACKSHELL | P605 CONNECTOR | M85049/27-22N | 1004 1104 |
| P606 | CONNECTOR | FWD PRESS BHD | MS27473E22F35PB | 1004 1104 |
| P606-BS | BACKSHELL | P606 CONNECTOR | M85049-27-22N | 1004 1104 |
| P607 | CONNECTOR | FWD PRESS BHD | MS3476L14-19S | 1004 1104 |
| P607-BS | BACKSHELL | P607 CONNECTOR | M85049-31-14N | 1004 1104 |
| P607-BS | BACKSHELL | P607 CONNECTOR | M85049/31-14N | 1004 1018 |
| P608 | CONNECTOR | FWD PRESS BHD | MS3476L14-19S | 1004 1104 |
| P608-BS | BACKSHELL | P608 CONNECTOR | M85049-31-14N | 1004 1104 |
| P608-BS | BACKSHELL | P608 CONNECTOR | M85049/31-14N | 1004 1018 |
| P609 | CONNECTOR | FWD PRESS BHD | MS3476L24-61S | 1004 1104 |
| P609-BS | BACKSHELL | P609 CONNECTOR | M85049-31-24N | 1004 1104 |
| P60-SBA | SHRINK BOOT | P60 CONNECTOR | 310DS002M08 | 1083 1104 |
| P61 | CONNECTOR | L OIL LOW PRESS | MS3126F8-33S | 1004 1082 |
| P61 | CONNECTOR | L OIL LOW PRESS | MS3476L8-33S | 1083 1104 |
| P611 | CONNECTOR | PILOT CB PNL | MS3476L22-41PW | 1004 1104 |
| P611-BS | BACKSHELL | P611 CONNECTOR | M85049-31-22N | 1004 1104 |
| P611-BS | BACKSHELL | P611 CONNECTOR | M85049/31-22N | 1004 1104 |

| CODE | NOMENCLATURE | LOCATION | PART NUMBER | EFF. |
|---|---|---|---|---|
| P612 | CONNECTOR | COPILOT CB PNL | MS3476L22-41PW | 1004 1104 |
| P612-BS | BACKSHELL | P612 CONNECTOR | M85049/31-22N | 1004 1104 |
| P612-BS | BACKSHELL | P612 CONNECTOR | M85049-31-22N | 1004 1104 |
| P612-BS | BACKSHELL | P612 CONNECTOR | M85049/22N | 1004 1104 |
| P613 | CONNECTOR KIT | ADF RECEIVER | 634-1022-001 | 1004 1104 |
| P613-CXI | COAX INSERT | P613 CONNECTOR | 372-2519-040 | 1004 1104 |
| P613-CXI | COAX INSERT | P613 CONNECTOR | 372-2519-100 | 1058 1104 |
| P613-FR | FERRULE | P613 CONNECTOR | 304-0608-000 | 1004 1104 |
| P613-GS | GROUNDING SPRING | P613 CONNECTOR | 634-0102-001 | 1004 1104 |
| P613-IR | INSULATOR | P613 CONNECTOR | 304-0880-000 | 1004 1104 |
| P613-PIN | CONTACT | P613 CONNECTOR | 372-2514-110 | 1004 1104 |
| P615 | CONNECTOR | FWD PRESS BHD | JT06RE16-13P023 | 1004 1104 |
| P617 | CONNECTOR | ADF CTRL UNIT | MS3476L20-41SX | 1004 1104 |
| P617-BS | BACKSHELL | P617 CONNECTOR | M85049-31-20N | 1004 1104 |
| P617-BS | BACKSHELL | P617 CONNECTOR | M85049/31-20N | 1004 1104 |
| P618 | CONNECTOR | EMERG PWR UNIT | 205838-1 | 1006 1104 |
| P618-BS | BACKSHELL | P618 CONNECTOR | 206062-1 | 1006 1104 |
| P619 | CONNECTOR | ADF ANT | PT08P12-10S | 1004 1104 |
| P61-SBA | SHRINK BOOT | P61 CONNECTOR | M85049/60-1N8 | 1083 1104 |
| P62 | CONNECTOR | R OIL LOW PRESS | MS3126F8-33S | 1004 1082 |
| P62 | CONNECTOR | R OIL LOW PRESS | MS3476L8-33S | 1083 1104 |
| P620 | CONNECTOR | COCKPIT(RH) | MS3476L12-10S | 1004 1104 |
| P620-BS | BACKSHELL | P620 CONNECTOR | M85049-31-12N | 1004 1104 |
| P621 | CONNECTOR | PRI TRANSPONDER | 634-1021-001 | 1004 1104 |
| P621-PIN | CONTACT | P621 CONNECTOR | 372-2514-110 | 1004 1104 |
| P621-PIN | CONTACT | P621 CONNECTOR | 372-2514-180 | 1004 1104 |
| P623 | CONNECTOR | XPNDR CTRL ADAPTER | DDMA50S | 1004 1104 |
| P623-HD | HOOD | P623 CONNECTOR | D50-000JVL | 1004 1104 |
| P623-KP | KEY PLUG | P623 CONNECTOR | 629-8339-001 | 1004 1104 |
| P625 | CONNECTOR | XPNDR CTRL UNIT | MS3476L20-41SY | 1004 1104 |
| P625-BS | BACKSHELL | P625 CONNECTOR | M85049-31-20N | 1004 1104 |
| P627 | CONNECTOR | DME XCVR | 634-1021-001 | 1004 1104 |
| P627-PIN | CONTACT | P627 CONNECTOR | 372-2514-110 | 1004 1104 |
| P628 | CONNECTOR | DME2 XCVR | 634-1021-001 | 1004 1104 |
| P628-PIN | CONTACT | P628 CONNECTOR | 372-2514-110 | 1004 1104 |
| P629 | CONNECTOR KIT | PRI COM XCVR | 634-1022-001 | 1004 1104 |
| P629-CXI | COAX INSERT | P629 CONNECTOR | 372-2519-040 | 1004 1057 |
| P629-CXI | COAX INSERT | P629 CONNECTOR | 372-2519-100 | 1058 1104 |
| P629-PIN | CONTACT | P629 CONNECTOR | 372-2514-110 | 1004 1104 |
| P629-PIN | CONTACT | P629 CONNECTOR | 372-2514-180 | 1004 1104 |

| CODE | NOMENCLATURE | LOCATION | PART NUMBER | EFF. |
|---|---|---|---|---|
| P62-SBA | SHRINK BOOT | P62 CONNECTOR | M85049/60-1N8 | 1083 1104 |
| P63 | CONNECTOR | L TANK | MS3476L14-19S | 1004 1104 |
| P630 | CONNECTOR KIT | SEC COM XCVR | 634-1022-001 | 1004 1104 |
| P630-CXI | COAX INSERT | P630 CONNECTOR | 372-2519-040 | 1004 1057 |
| P630-CXI | COAX INSERT | P630 CONNECTOR | 372-2519-100 | 1058 1104 |
| P630-PIN | CONTACT | P630 CONNECTOR | 372-2514-180 | 1004 1104 |
| P630-PIN | CONTACT | P630 CONNECTOR | 372-2514-110 | 1004 1104 |
| P631 | CONNECTOR | PRI COM CTRL UNIT | MS3476L20-41SW | 1004 1104 |
| P631-BS | BACKSHELL | P631 CONNECTOR | M85049-31-20N | 1004 1104 |
| P632 | CONNECTOR | SEC COM CTRL UNIT | MS3476L20-41SW | 1004 1104 |
| P632-BS | BACKSHELL | P632 CONNECTOR | M85049-31-20N | 1004 1104 |
| P633 | CONNECTOR KIT | PRI NAV RECEIVER | 634-1022-001 | 1004 1104 |
| P633-CXI | COAX INSERT | P633 CONNECTOR | 372-2519-040 | 1004 1104 |
| P633-PIN | CONTACT | P633 CONNECTOR | 372-2514-110 | 1004 1104 |
| P633-PIN | CONTACT | P633 CONNECTOR | 372-2514-180 | 1004 1104 |
| P634 | CONNECTOR KIT | SEC NAV RECEIVER | 634-1022-001 | 1004 1104 |
| P634-CXI | COAX INSERT | P634 CONNECTOR | 372-2519-040 | 1004 1057 |
| P634-CXI | COAX INSERT | P634 CONNECTOR | 372-2519-100 | 1058 1104 |
| P634-PIN | CONTACT | P634 CONNECTOR | 372-2514-110 | 1004 1104 |
| P635 | CONNECTOR KIT | PRI NAV RECEIVER | 634-1022-001 | 1004 1104 |
| P635-CXI | COAX INSERT | P635 CONNECTOR | 372-2519-040 | 1004 1104 |
| P635-CXI | COAX INSERT | P635 CONNECTOR | 372-2519-100 | 1058 1104 |
| P635-PIN | CONTACT | P635 CONNECTOR | 372-2514-180 | 1004 1104 |
| P635-PIN | CONTACT | P635 CONNECTOR | 372-2514-110 | 1004 1104 |
| P636 | CONNECTOR KIT | SEC NAV RECEIVER | 634-1022-001 | 1004 1104 |
| P636-CXI | COAX INSERT | P636 CONNECTOR | 372-2519-040 | 1004 1057 |
| P636-CXI | COAX INSERT | P636 CONNECTOR | 372-2519-100 | 1058 1104 |
| P636-CXI | COAX INSERT | P636 CONNECTOR | 372-2519-100 | 466 466 |
| P636-PIN | CONTACT | P636 CONNECTOR | 372-2514-110 | 1004 1104 |
| P637 | CONNECTOR | PRI NAV CTRL UNIT | MS3476L20-41S | 1004 1104 |
| P637-BS | BACKSHELL | P637 CONNECTOR | M85049/31-20N | 1004 1104 |
| P637-BS | BACKSHELL | P637 CONNECTOR | M85049-31-20N | 1004 1104 |
| P638 | CONNECTOR | SEC NAV CTRL UNIT | MS3476L20-41S | 1004 1104 |
| P638-BS | BACKSHELL | P638 CONNECTOR | M85049/31-20N | 1004 1104 |
| P638-BS | BACKSHELL | P638 CONNECTOR | M85049-31-20N | 1004 1104 |

| CODE | NOMENCLATURE | LOCATION | PART NUMBER | EFF. |
|---|---|---|---|---|
| P639 | CONNECTOR | DUAL ADF ANT | PT08P14-19S | 1004 1104 |
| P63-BS | BACKSHELL | P63 CONNECTOR | M85049-31-14N | 1004 1104 |
| P64 | CONNECTOR | R TANK | MS3476L14-19S | 1004 1104 |
| P641 | CONNECTOR KIT | DUAL ADF | 634-1022-001 | 1004 1104 |
| P641-CXI | COAX INSERT | P641 CONNECTOR | 372-2519-040 | 1004 1104 |
| P641-FR | FERRULE | P641 CONNECTOR | 304-0608-000 | 1004 1104 |
| P641-GS | GROUNDING SPRING | P641 CONNECTOR | 634-0102-001 | 1004 1104 |
| P641-IR | INSULATOR | P641 CONNECTOR | 304-0880-000 | 1004 1104 |
| P641-PIN | CONTACT | P641 CONNECTOR | 372-2514-110 | 1004 1104 |
| P643 | CONNECTOR | STBY HORIZ | 821-0131-001 | 1006 1104 |
| P64-BS | BACKSHELL | P64 CONNECTOR | M85049-31-14N | 1004 1104 |
| P65 | CONNECTOR | L FUEL QTY IND | MS3476L14-19S | 1004 1104 |
| P651 | CONNECTOR | A/P COMPUTER | 634-1021-001 | 1004 1104 |
| P651-PIN | CONTACT | P651 CONNECTOR | 372-2514-180 | 1004 1104 |
| P651-PIN | CONTACT | P651 CONNECTOR | 372-2514-110 | 1004 1104 |
| P652 | CONNECTOR | A/P COMPUTER | 634-1021-001 | 1004 1104 |
| P652-PIN | CONTACT | P652 CONNECTOR | 372-2514-180 | 1004 1104 |
| P652-PIN | CONTACT | P652 CONNECTOR | 372-2514-110 | 1004 1104 |
| P653 | CONNECTOR | A/P COMPUTER | 634-1021-001 | 1004 1104 |
| P653-PIN | CONTACT | P653 CONNECTOR | 372-2514-110 | 1004 1104 |
| P653-PIN | CONTACT | P653 CONNECTOR | 372-2514-180 | 1004 1104 |
| P654 | CONNECTOR | A/P CONTROLLER | DDMA50S | 1004 1104 |
| P654-HD | HOOD | P654 CONNECTOR | D50-000JVL | 1004 1104 |
| P655 | CONNECTOR | YAW RATE SENSOR | B1700 | 1004 1104 |
| P656 | CONNECTOR | SLIP SKID SENSOR | MS3476L10-6S | 1004 1104 |
| P656-BS | BACKSHELL | P656 CONNECTOR | M85049-31-10N | 1004 1104 |
| P657 | CONNECTOR | NORM ACCELEROMETER | 372-2292-010 | 1004 1104 |
| P65-BS | BACKSHELL | P656 CONNECTOR | M85049-31-14N | 1004 1104 |
| P66 | CONNECTOR | R FUEL QTY IND | MS3476L14-19S | 1004 1104 |
| P660 | CONNECTOR | ELEVATOR SERVO | MS3476L12-10S | 1004 1104 |
| P660-BS | BACKSHELL | P660 CONNECTOR | M85049-31-12N | 1004 1104 |
| P661 | CONNECTOR | AILERON SERVO | MS3476L12-10S | 1004 1104 |
| P661-BS | BACKSHELL | P661 CONNECTOR | M85049-31-12N | 1004 1104 |
| P662 | CONNECTOR | RUDDER SERVO | MS3476L12-10S | 1004 1104 |
| P662-BS | BACKSHELL | P662 CONNECTOR | M85049-31-12N | 1004 1104 |
| P663 | CONNECTOR | BIAS BOX | MS3476L20-41S | 1004 1104 |
| P663-BS | BACKSHELL | P663 CONNECTOR | M85049-31-20N | 1004 1104 |
| P663-BS | BACKSHELL | P663 CONNECTOR | M85049/31-20N | 1004 1104 |
| P664 | CONNECTOR | BIAS BOX | MS3476L20-41S | 1004 1104 |
| P664-BS | BACKSHELL | P664 CONNECTOR | M85049/31-20N | 1004 1104 |

| CODE | NOMENCLATURE | LOCATION | PART NUMBER | EFF. |
|---|---|---|---|---|
| P664-BS | BACKSHELL | P664 CONNECTOR | M85049-31-20N | 1004 1104 |
| P665 | CONNECTOR | BIAS BOX | MS3476L16-26S | 1004 1104 |
| P665-BS | BACKSHELL | P665 CONNECTOR | M85049-31-16N | 1004 1104 |
| P665-BS | BACKSHELL | P665 CONNECTOR | M85049/31-16N | 1004 1104 |
| P66-BS | BACKSHELL | P66 CONNECTOR | M85049-31-14N | 1004 1104 |
| P67 | CONNECTOR | L FUEL FLOW XMTR | MS3116F8-4S | 1004 1104 |
| P670 | CONNECTOR | RDR RCVR/ANT | 371-0213-040 | 1004 1104 |
| P670-PIN | CONTACT | P670 CONNECTOR | 371-0213-110 | 1004 1104 |
| P670-SLK | SCREW LOCK | P670 CONNECTOR | 371-0040-010 | 1004 1104 |
| P670-SRF | STRAIN RELIEF | P670 CONNECTOR | 371-0147-000 | 1004 1104 |
| P678 | CONNECTOR | SEC GYRO DIRECTIONAL | 371-0213-050 | 1004 1104 |
| P678-PIN | CONTACT | P678 CONNECTOR | 371-0213-110 | 1004 1104 |
| P678-SLK | SCREW LOCK | P678 CONNECTOR | 371-0040-040 | 1004 1104 |
| P678-SRF | STRAIN RELIEF | P678 CONNECTOR | 371-0146-000 | 1004 1022 |
| P678-SRF | STRAIN RELIEF | P678 CONNECTOR | 371-0148-000 | 1004 1104 |
| P67-SBA | SHRINK BOOT | P67 CONNECTOR | 310DS002M08 | 1083 1104 |
| P68 | CONNECTOR | R FUEL FLOW XMTR | MS3116F8-4S | 1004 1104 |
| P682 | CONNECTOR | SEC FLUX DETECTOR | 634-3148-001 | 1004 1104 |
| P683 | CONNECTOR | RMI 1 | DDMA50S | 1004 1104 |
| P683-HD | HOOD | P683 CONNECTOR | MD50-000JVL | 1004 1038 |
| P683-HD | HOOD | P683 CONNECTOR | MD50-000-J-VL | 1004 1104 |
| P683-HD | HOOD | P683 CONNECTOR | DD115339-4 | 1039 1104 |
| P683-SL | SLIDE LATCH | P683 CONNECTOR | DD51223-1 | 1039 1104 |
| P684 | CONNECTOR | RMI 2 | DDMA50S | 1004 1104 |
| P684-HD | HOOD | P684 CONNECTOR | DD121073-153 | 1039 1104 |
| P684-HD | HOOD | P684 CONNECTOR | MD50-000JVL | 1004 1038 |
| P684-HD | HOOD | P684 CONNECTOR | MD50-000-J-VL | 1004 1104 |
| P684-SL | SLIDE LATCH | P684 CONNECTOR | DD121073-226 | 1039 1104 |
| P685 | CONNECTOR | PRI GYRO | 371-0213-050 | 1004 1104 |
| P685-PIN | CONTACT | P685 CONNECTOR | 371-0213-110 | 1004 1104 |
| P685-SLK | SCREW LOCK | P685 CONNECTOR | 371-0040-040 | 1004 1104 |
| P685-SRF | STRAIN RELIEF | P685 CONNECTOR | 371-0399-280 | 1004 1104 |
| P685-SRF | STRAIN RELIEF | P685 CONNECTOR | 371-0148-000 | 1004 1104 |
| P687 | CONNECTOR | PRI VERTICAL GYRO | MS3476L18-32S | 1004 1104 |
| P687-BS | BACKSHELL | P687 CONNECTOR | M85049-31-18N | 1004 1104 |
| P68-SBA | SHRINK BOOT | P68 CONNECTOR | 310DS002M08 | 1083 1104 |
| P691 | CONNECTOR | PRI FLUX DETECTOR | 634-3148-001 | 1004 1104 |

| CODE | NOMENCLATURE | LOCATION | PART NUMBER | EFF. |
|---|---|---|---|---|
| P693 | CONNECTOR | ENC ALTIMET | 371-0213-030 | 1004 1104 |
| P693-KP | KEY PLUG | P693 CONNECTOR | 629-8339-001 | 1004 1104 |
| P693-PIN | CONTACT | P693 CONNECTOR | 371-0213-110 | 1004 1104 |
| P693-SLK | SCREW LOCK | P693 CONNECTOR | 371-0040-010 | 1004 1104 |
| P693-SRF | STRAIN RELIEF | P693 CONNECTOR | 371-0146-000 | 1004 1104 |
| P695 | CONNECTOR | MACH AIRSP IND | 371-0213-030 | 1004 1104 |
| P695-KP | KEY PLUG | P695 CONNECTOR | 629-8339-001 | 1004 1104 |
| P695-PIN | CONTACT | P695 CONNECTOR | 371-0213-110 | 1004 1104 |
| P695-SLK | SCREW LOCK | P695 CONNECTOR | 371-0040-010 | 1004 1104 |
| P695-SRF | STRAIN RELIEF | P695 CONNECTOR | 371-0146-000 | 1004 1104 |
| P696 | CONNECTOR | MACH/AS CPLT | MS3476L12-10S | 1036 1104 |
| P696 | CONNECTOR | MACH/AS CPLT | MS3116F8-4S | 1004 1035 |
| P696-BS | BACKSHELL | P696 CONNECTOR | M85049-31-8N | 1004 1035 |
| P696-BS | BACKSHELL | P696 CONNECTOR | M85049-31-12N | 1036 1104 |
| P698 | CONNECTOR | ALTIMETER CPLT | MS3476L10-6S | 1004 1104 |
| P698-BS | BACKSHELL | P698 CONNECTOR | M85049/31-10N | 1004 1104 |
| P698-BS | BACKSHELL | P698 CONNECTOR | M85049-31-10N | 1004 1104 |
| P699 | CONNECTOR | VERT SPEED IND | 371-0213-030 | 1004 1104 |
| P699-KP | KEY PLUG | P699 CONNECTOR | 629-8339-001 | 1004 1104 |
| P699-PIN | CONTACT | P699 CONNECTOR | 371-0213-110 | 1004 1104 |
| P699-SLK | SCREW LOCK | P699 CONNECTOR | 371-0040-010 | 1004 1104 |
| P699-SRF | STRAIN RELIEF | P699 CONNECTOR | 371-0146-000 | 1004 1104 |
| P7 | CONNECTOR | MAIN JUNCT.BOX | MS3476L16-23S | 1004 1104 |
| P700 | CONNECTOR | RATE OF CLIMB CPLT | MS3476L12-10S | 1004 1104 |
| P700-BS | BACKSHELL | P700 CONNECTOR | M85049-31-12N | 1004 1104 |
| P707 | CONNECTOR | TEMP SENSOR | M83723-75R14-7N | 1004 1104 |
| P707-BS | BACKSHELL | P707 CONNECTOR | M85049-31-14N | 1034 1104 |
| P71 | CONNECTOR | L FUEL FILTER | MS3126F8-33S | 1004 1033 |
| P71 | CONNECTOR | L FUEL FILTER | MS3476L12-3S | 1034 1104 |
| P713 | CONNECTOR | ELT SYSTEM | 105-0303-001 | 1004 1104 |
| P714 | CONNECTOR | ELT SYSTEM | 105-0303-001 | 1004 1104 |
| P715 | CONNECTOR | TURN/SLIP IND | MS3106R14S2S | 1004 1004 |
| P717 | CONNECTOR | PHONE/MIC PNL PLT | MS3476L12-10S | 1004 1104 |
| P717-BS | BACKSHELL | P717 CONNECTOR | M85049/31-12N | 1004 1018 |
| P717-BS | BACKSHELL | P717 CONNECTOR | M85049-31-12N | 1004 1104 |
| P718 | CONNECTOR | PHONE/MIC PNL CPLT | MS3476L12-10S | 1004 1104 |
| P718-BS | BACKSHELL | P718 CONNECTOR | M85049/31-12N | 1004 1018 |
| P718-BS | BACKSHELL | P718 CONNECTOR | M85049-31-12N | 1004 1104 |
| P71-BS | BACKSHELL | P71- CONNECTOR | M85049-31-12N | 1034 1082 |

| CODE | NOMENCLATURE | LOCATION | PART NUMBER | EFF. |
|---|---|---|---|---|
| P71-LB | LIPPED BOOT | P71 CONNECTOR | 222K142-25 | 1083 1104 |
| P71-SBA | SHRINK BOOT | P71 CONNECTOR | M85049/60-1N12 | 1083 1104 |
| P72 | CONNECTOR | R FUEL FILTER | MS3476L12-3S | 1034 1104 |
| P72 | CONNECTOR | R FUEL FILTER | MS3126F8-33S | 1004 1033 |
| P721 | CONNECTOR | TRIM SWITCH PNL | MS3476L14-19S | 1004 1104 |
| P721-BS | BACKSHELL | P721 CONNECTOR | M85049-31-14N | 1004 1104 |
| P722 | CONNECTOR | AVIONICS CTRL COLUMN | MS3476L14-18S | 1004 1104 |
| P722-BS | BACKSHELL | P722 CONNECTOR | M85049-31-14N | 1004 1104 |
| P722-BS | BACKSHELL | P722 CONNECTOR | M85049/31-14N | 1004 1018 |
| P722-BS | BACKSHELL | P722 CONNECTOR | M85049/31-14N | 1019 1104 |
| P727 | CONNECTOR | PRESEL ALERTER | 371-0213-030 | 1004 1104 |
| P727-KP | KEY PLUG | P727 CONNECTOR | 629-8339-001 | 1004 1104 |
| P727-PIN | CONTACT | P727 CONNECTOR | 371-0213-110 | 1004 1104 |
| P727-SLK | SCREW LOCK | P727 CONNECTOR | 371-0040-010 | 1004 1104 |
| P727-SRF | STRAIN RELIEF | P727 CONNECTOR | 371-0146-000 | 1004 1104 |
| P729 | CONNECTOR | FURN WITH CLOCK | MD9F20JVL | 1004 1104 |
| P72-BS | BACKSHELL | P72 CONNECTOR | M85049-31-12N | 1034 1082 |
| P72-LB | LIPPED BOOT | P72 CONNECTOR | 222K142-25 | 1083 1104 |
| P72-SBA | SHRINK BOOT | P72 CONNECTOR | M85049/60-1N12 | 1083 1104 |
| P732 | CONNECTOR | SEC TRANSPONDER | 634-1021-001 | 1004 1104 |
| P732-PIN | CONTACT | P732 CONNECTOR | 372-2514-110 | 1004 1104 |
| P732-PIN | CONTACT | P732 CONNECTOR | 372-2514-180 | 1004 1104 |
| P733 | CONNECTOR | HF ANT COUPLER | 050-02069-0001 | 1004 1104 |
| P734 | CONNECTOR | HF XCVR | 050-02121-0001 | 1004 1104 |
| P735 | CONNECTOR | HF XCVR | 050-02121-0001 | 1004 1104 |
| P736 | CONNECTOR | HF CONTROL PNL | 050-01986-0001 | 1004 1104 |
| P740 | COAX CONNECTOR | LRN/OMEGA | 050-02248-0000 | 1004 1104 |
| P740-BS | BACKSHELL | P740 CONNECTOR | M8372315S14R | 1004 1104 |
| P741 | CONNECTOR | LRN/OMEGA | 050-01901-0 | 1004 1104 |
| P742 | CONNECTOR | LRN/OMEGA | 050-01901-0 | 1004 1104 |
| P743 | CONNECTOR | LRN/OMEGA | 050-01901-0 | 1004 1104 |
| P744 | CONNECTOR | LRN/OMEGA | 050-01901-0 | 1004 1104 |
| P745 | COAX CONNECTOR | LRN/OMEGA | 050-02200-0001 | 1004 1104 |
| P746 | CONNECTOR | SEC VERTICAL GYRO | MS3476L18-32S | 1004 1104 |
| P746-BS | BACKSHELL | P746 CONNECTOR | M85049-31-18N | 1004 1104 |
| P747 | CONNECTOR | PRI REMOT COMPENSAT | 371-0213-030 | 1004 1104 |
| P747-PIN | CONTACT | P747 CONNECTOR | 371-0213-110 | 1004 1104 |

| CODE | NOMENCLATURE | LOCATION | PART NUMBER | EFF. |
|---|---|---|---|---|
| P747-SLK | SCREW LOCK | P747 CONNECTOR | 371-0040-010 | 1004 1104 |
| P747-SRF | STRAIN RELIEF | P747 CONNECTOR | 371-0146-000 | 1004 1104 |
| P748 | CONNECTOR | SEC REMOT COMPENSAT | 371-0213-030 | 1004 1104 |
| P748-PIN | CONTACT | P748 CONNECTOR | 371-0213-110 | 1004 1104 |
| P748-SLK | SCREW LOCK | P748 CONNECTOR | 371-0040-010 | 1004 1104 |
| P748-SRF | STRAIN RELIEF | P748 CONNECTOR | 371-0146-000 | 1004 1104 |
| P748-SRF | STRAIN RELIEF | P748 CONNECTOR | 371-0399-260 | 1004 1022 |
| P75 | CONNECTOR | MFD INDICATOR | MS3476L14-19S | 1004 1104 |
| P750 | CONNECTOR | ELEK FLIGHT DISPLAY | 371-0213-030 | 1004 1104 |
| P750-KP | KEY PLUG | P750 CONNECTOR | 629-8339-001 | 1004 1104 |
| P750-PIN | CONTACT | P750 CONNECTOR | 371-0213-110 | 1004 1104 |
| P750-SRF | STRAIN RELIEF | P750 CONNECTOR | 371-0399-260 | 1004 1104 |
| P752 | CONNECTOR | ATTITUDE INDICATOR | MS3476L24-61S | 1004 1104 |
| P752-BS | BACKSHELL | P752 CONNECTOR | M85049-31-24N | 1004 1104 |
| P754 | CONNECTOR | EHSI CONTROL PNL | 371-0213-040 | 1004 1104 |
| P754-KP | KEY PLUG | P754 CONNECTOR | 629-8339-001 | 1004 1104 |
| P754-PIN | CONTACT | P754 CONNECTOR | 371-0213-110 | 1004 1104 |
| P754-SRF | STRAIN RELIEF | P754 CONNECTOR | 371-0399-270 | 1004 1104 |
| P755 | RECEPTACLE | LRN/OMEGA | 205209-1 | 1004 1104 |
| P755-HD | HOOD | P755 CONNECTOR | MD37-000J | 1004 1104 |
| P755-HD | HOOD | P755 CONNECTOR | MD-37-000-J | 1004 1104 |
| P755-LKL | LOCKARM LEVER | P755 CONNECTOR | MD37-000VL | 1004 1104 |
| P755-PIN | CONTACT | P755 CONNECTOR | 205090-1 | 1004 1104 |
| P757 | CONNECTOR | GPS SENSOR | 050-02658-0 | 1004 1104 |
| P758 | CONNECTOR | FURN WITH CLOCK | MD9F20JVL | 1004 1104 |
| P75-BS | BACKSHELL | P75 CONNECTOR | M85049-31-14N | 1004 1104 |
| P75-BS | BACKSHELL | P75 CONNECTOR | M85049/31-14N | 1004 1104 |
| P76 | CONNECTOR | OUTSIDE AIR SENSOR | MS3106R10SL4S | 1004 1104 |
| P77 | CONNECTOR | L ENG TEMP IND | MS3476L14-18S | 1004 1104 |
| P77-BS | BACKSHELL | P77 CONNECTOR | M85049-31-14N | 1004 1104 |
| P77-BS | BACKSHELL | P77 CONNECTOR | M85049/31-14N | 1004 1104 |
| P77-PIN | CONTACT | P77 CONNECTOR | M39029-10-141 | 1004 1104 |
| P77-PIN | CONTACT | P77 CONNECTOR | M39029/10-141 | 1004 1104 |
| P77-PIN | CONTACT | P77 CONNECTOR | M39029/10-140 | 1004 1104 |
| P77-PIN | CONTACT | P77 CONNECTOR | M39029-10-140 | 1004 1104 |
| P78 | CONNECTOR | R ENG TEMP IND | MS3476L14-18S | 1004 1104 |
| P78-BS | BACKSHELL | P78 CONNECTOR | M85049-31-14N | 1004 1104 |

| CODE | NOMENCLATURE | LOCATION | PART NUMBER | EFF. |
|---|---|---|---|---|
| P78-BS | BACKSHELL | P78 CONNECTOR | M85049/31-14N | 1004 1104 |
| P78-PIN | CONTACT | P78 CONNECTOR | M39029-10-141 | 1004 1104 |
| P78-PIN | CONTACT | P78 CONNECTOR | M39029/10-141 | 1004 1104 |
| P78-PIN | CONTACT | P78 CONNECTOR | M39029/10-140 | 1004 1104 |
| P78-PIN | CONTACT | P78 CONNECTOR | M39029-10-140 | 1004 1104 |
| P79 | CONNECTOR | PILOT SWITCH PNL | MS3476L24-61S | 1004 1100 |
| P79-BS | BACKSHELL | P79 CONNECTOR | M85049-31-24N | 1004 1100 |
| P79-BS | BACKSHELL | P79 CONNECTOR | M85049/31-24N | 1004 1104 |
| P7-BS | BACKSHELL | P7-B CONNECTOR | M85049/31-16N | 1004 1104 |
| P7-BS | BACKSHELL | P7-B CONNECTOR | M85049-31-16N | 1004 1104 |
| P8 | CONNECTOR | R IGNITION SYSTEM | MS3106R12S3S | 1004 1082 |
| P8 | CONNECTOR | R IGNITION SYSTEM | MS3456L12S-3S | 1083 1104 |
| P80 | CONNECTOR | PILOT SWITCH PNL | MS27473T24B4SC | 1004 1100 |
| P801 | COAX CONNECTOR | PRI TRANSPONDER | 225345-8 | 1004 1057 |
| P801 | COAX CONNECTOR | PRI TRANSPONDER | 857-1511-010 | 1058 1104 |
| P803 | COAX CONNECTOR | DME XCVR | 225345-8 | 1004 1057 |
| P803 | COAX CONNECTOR | DME XCVR | 857-1511-010 | 1058 1104 |
| P804 | COAX CONNECTOR | DME2 XCVR | 225345-8 | 1004 1104 |
| P805 | COAX CONNECTOR | FWD PRESS BHD | M39012/16-0004 | 1004 1057 |
| P805 | COAX CONNECTOR | FWD PRESS BHD | M39012/16B0007 | 1058 1104 |
| P806 | COAX CONNECTOR | FWD PRESS BHD | M39012/16-0004 | 1004 1057 |
| P806 | COAX CONNECTOR | FWD PRESS BHD | M39012/16B0007 | 1058 1104 |
| P807 | COAX CONNECTOR | FWD PRESS BHD | M39012/16-0004 | 1004 1057 |
| P807 | COAX CONNECTOR | FWD PRESS BHD | M39012/16B0007 | 1058 1104 |
| P808 | COAX CONNECTOR | FWD PRESS BHD | M39012-16-0004 | 1004 1057 |
| P808 | COAX CONNECTOR | FWD PRESS BHD | M39012/16B0007 | 1058 1104 |
| P809 | COAX CONNECTOR | TCAS 1 | 190613 | 1004 1104 |
| P80-BS | BACKSHELL | P80 CONNECTOR | M85049-27-24N | 1004 1100 |
| P80-BS | BACKSHELL | P80 CONNECTOR | M85049/27-24N | 1034 1104 |
| P80-BS | BACKSHELL | P80 CONNECTOR | M85049/27-24N | 1004 1104 |
| P81 | CONNECTOR | FUEL CONTROL PNL | MS3476L22-41S | 1004 1104 |
| P810 | COAX CONNECTOR | TCAS 1 | 190609 | 1004 1104 |
| P811 | COAX CONNECTOR | TCAS 1 | 190609 | 1004 1104 |
| P812 | COAX CONNECTOR | TCAS 1 | 190609 | 1004 1104 |
| P813 | COAX CONNECTOR | TCAS 1 | 190609 | 1004 1104 |
| P815 | COAX CONNECTOR | ANT COM 1 | M39012/16B0007 | 1058 1104 |

| CODE | NOMENCLATURE | LOCATION | PART NUMBER | EFF. |
|---|---|---|---|---|
| P815 | COAX CONNECTOR | ANT COM 1 | M39012-16-0004 | 1004 1057 |
| P816 | COAX CONNECTOR | AFT PRESS BHD | M39012-16-0004 | 1004 1057 |
| P816 | COAX CONNECTOR | AFT PRESS BHD | M39012/16B0007 | 1058 1104 |
| P817 | COAX CONNECTOR | MKR BCN ANT | M39012/16B0007 | 1058 1104 |
| P817 | COAX CONNECTOR | MKR BCN ANT | M39012-16-0004 | 1004 1057 |
| P818 | COAX CONNECTOR | AFT PRESS BHD | M39012-16-0004 | 1004 1057 |
| P818 | COAX CONNECTOR | AFT PRESS BHD | M39012/16B0007 | 1058 1104 |
| P81-BS | BACKSHELL | P81 CONNECTOR | M85049-31-22N | 1004 1104 |
| P82 | CONNECTOR | FUEL CONTROL PNL | MS3476L22-41SW | 1004 1104 |
| P821 | COAX CONNECTOR | PRI XPNDR ANT | 225886-2 | 1004 1057 |
| P821 | COAX CONNECTOR | PRI XPNDR ANT | 11BNC-50-7-2C | 1058 1104 |
| P822 | COAX CONNECTOR | DME2 ANT | 225886-2 | 1004 1104 |
| P823 | COAX CONNECTOR | DME ANT | 11BNC-50-7-2C | 1058 1104 |
| P823 | COAX CONNECTOR | DME ANT | 225886-2 | 1004 1057 |
| P826 | COAX CONNECTOR | ANT COM 2 | M39012-16-0004 | 1004 1057 |
| P826 | COAX CONNECTOR | ANT COM 2 | M39012/16B0007 | 1058 1104 |
| P828 | COAX CONNECTOR | VOR/LOC ANT | M39012-16-0004 | 1004 1057 |
| P828 | COAX CONNECTOR | VOR /LOC ANT | M39012/16B0007 | 1058 1104 |
| P829 | COAX CONNECTOR | GS ANT | M39012-16-0004 | 1004 1057 |
| P829 | COAX CONNECTOR | GS ANT | M39012/16B0007 | 1058 1104 |
| P82-BS | BACKSHELL | P82 CONNECTOR | M85049-31-22N | 1004 1104 |
| P830 | COAX CONNECTOR | GS DIPLEXER | M39012-16-0004 | 1004 1057 |
| P830 | COAX CONNECTOR | GS DIPLEXER | M39012/16B0007 | 1058 1104 |
| P831 | COAX CONNECTOR | GS DIPLEXER | M39012/16-0004 | 1004 1057 |
| P831 | COAX CONNECTOR | GS DIPLEXER | M39012/16B0007 | 1058 1104 |
| P832 | COAX CONNECTOR | GS DIPLEXER | M39012/16-0004 | 1004 1057 |
| P832 | COAX CONNECTOR | GS DIPLEXER | M39012/16B0007 | 1058 1104 |
| P834 | COAX CONNECTOR | VOR/LOC DIPLEXER | M39012-16-0004 | 1004 1057 |
| P834 | COAX CONNECTOR | VOR/LOC DIPLEXER | M39012/16B0007 | 1058 1104 |
| P835 | COAX CONNECTOR | VOR/LOC DIPLEXER | M39012/16-0004 | 1004 1057 |
| P835 | COAX CONNECTOR | VOR/LOC DIPLEXER | M39012/16B0007 | 1058 1104 |
| P836 | COAX CONNECTOR | VOR/LOC DIPLEXER | M39012/16-0004 | 1004 1057 |
| P836 | COAX CONNECTOR | VOR/LOC DIPLEXER | M39012/16B0007 | 1058 1104 |
| P837 | COAX CONNECTOR | TCAS 1 | 190613 | 1004 1104 |
| P838 | COAX CONNECTOR | XPNDR2 SIGNAL | M39012/16B0007 | 1058 1104 |
| P838 | COAX CONNECTOR | XPNDR2 SIGNAL | UG88BU | 1004 1057 |

| CODE | NOMENCLATURE | LOCATION | PART NUMBER | EFF. |
|---|---|---|---|---|
| P839 | COAX CONNECTOR | XPNDR2 SIGNAL | M39012/16B0007 | 1058 1104 |
| P839 | COAX CONNECTOR | XPNDR2 SIGNAL | UG88BU | 1004 1057 |
| P84 | CONNECTOR | R TORQUE XDCR | MS3476L10-6S | 1004 1104 |
| P840 | COAX CONNECTOR | SEC TRANSPONDER | 225345-8 | 1004 1057 |
| P840 | COAX CONNECTOR | SEC TRANSPONDER | 857-1511-010 | 1058 1104 |
| P841 | COAX CONNECTOR | XPNDR2 SIGNAL | M39012/17B0004 | 1058 1104 |
| P841 | COAX CONNECTOR | XPNDR2 SIGNAL | UG89BU | 1004 1057 |
| P842 | COAX CONNECTOR | SEC XPNDR ANT | 225886-2 | 1004 1057 |
| P842 | COAX CONNECTOR | SEC XPNDR ANT | 11BNC-50-7-2C | 1058 1104 |
| P843 | COAX CONNECTOR | E.L.T. | 261C1386-00 | 1004 1104 |
| P843 | COAX CONNECTOR | HF ANT COUPLER | 050-02069-0 | 1004 1104 |
| P844 | COAX CONNECTOR | HF XCVR | 050-02121-0 | 1004 1104 |
| P844 | COAX CONNECTOR | E.L.T. ANT | 261C1386-00 | 1004 1104 |
| P845 | COAX CONNECTOR | DME2 SIGNAL | UG88BU | 1004 1104 |
| P847 | COAX CONNECTOR | DME2 SIGNAL | UG88BU | 1004 1104 |
| P848 | COAX CONNECTOR | DME2 SIGNAL | UG88BU | 1004 1104 |
| P849 | COAX CONNECTOR | HF ANT COUPLER | 050-02069-0001 | 1004 1104 |
| P84-BS | BACKSHELL | P84 CONNECTOR | M85049-31-10N | 1004 1082 |
| P84-SBA | SHRINK BOOT | P84 CONNECTOR | M85049/60-1N10 | 1083 1104 |
| P85 | CONNECTOR | L TORQUE XDCR | MS3476L10-6S | 1004 1104 |
| P850 | COAX CONNECTOR | HF XCVR | 050-02121-0001 | 1004 1104 |
| P851 | CONNECTOR KIT | PROCESSOR UNIT | 634-1020-001 | 1004 1104 |
| P851-PIN | CONTACT | P851 CONNECTOR | 372-2514-110 | 1004 1104 |
| P851-PIN | CONTACT | P851 CONNECTOR | 372-2514-180 | 1004 1104 |
| P852 | CONNECTOR KIT | PROCESSOR UNIT | 634-1020-001 | 1004 1104 |
| P852-PIN | CONTACT | P852 CONNECTOR | 372-2514-180 | 1004 1104 |
| P852-PIN | CONTACT | P852 CONNECTOR | 372-2514-110 | 1004 1104 |
| P853 | CONNECTOR KIT | PROCESSOR UNIT | 634-1020-001 | 1004 1104 |
| P853-PIN | CONTACT | P853 CONNECTOR | 372-2514-110 | 1004 1104 |
| P853-PIN | CONTACT | P853 CONNECTOR | 372-2514-180 | 1004 1104 |
| P854 | CONNECTOR | SEE AE650 | 634-1021-001 | 1004 1104 |
| P854-PIN | CONTACT | P854 CONNECTOR | 372-2514-110 | 1004 1104 |
| P856 | CONNECTOR | SEE AE650 | 634-1021-001 | 1004 1104 |
| P856-PIN | CONTACT | P856 CONNECTOR | 372-2514-110 | 1004 1104 |
| P858 | CONNECTOR | SEE AE650 | 634-1021-001 | 1004 1104 |
| P858-PIN | CONTACT | P858 CONNECTOR | 372-2514-110 | 1004 1104 |
| P85-BS | BACKSHELL | P85 CONNECTOR | M85049-31-10N | 1004 1082 |
| P85-BS | BACKSHELL | P85 CONNECTOR | M85049/60-1N18 | 1083 1104 |
| P86 | CONNECTOR | R PROP RPM IND | MS3476L14-15SW | 1004 1104 |

| CODE | NOMENCLATURE | LOCATION | PART NUMBER | EFF. |
|---|---|---|---|---|
| P861 | CONNECTOR KIT | DISPLAY PROCESSOR | 634-1020-001 | 1004 1104 |
| P861-PIN | CONTACT | P861 CONNECTOR | 372-2514-110 | 1004 1104 |
| P861-PIN | CONTACT | P861 CONNECTOR | 372-2514-180 | 1004 1104 |
| P862 | CONNECTOR KIT | DISPLAY PROCESSOR | 634-1020-001 | 1004 1104 |
| P862-PIN | CONTACT | P862 CONNECTOR | 372-2514-110 | 1004 1104 |
| P862-PIN | CONTACT | P862 CONNECTOR | 372-2514-180 | 1004 1104 |
| P86-BS | BACKSHELL | P86 CONNECTOR | M85049-31-14N | 1004 1104 |
| P87 | CONNECTOR | L PROP RPM IND | MS3476L14-15SW | 1004 1104 |
| P871 | CONNECTOR | ADC-85 COMPUTER | 634-1021-001 | 1004 1104 |
| P871-PIN | CONTACT | P871 CONNECTOR | 372-2514-110 | 1004 1104 |
| P873 | CONNECTOR | ADC-85 COMPUTER | 634-1021-001 | 1004 1104 |
| P873-PIN | CONTACT | P873 CONNECTOR | 372-2514-110 | 1004 1104 |
| P87-BS | BACKSHELL | P87 CONNECTOR | M85049-31-14N | 1004 1104 |
| P88 | CONNECTOR | R PROP OVSP VALVE | MS3456L10SL-4S | 1083 1104 |
| P88 | CONNECTOR | R PROP OVSP VALVE | MS3106R10SL4S | 1004 1082 |
| P882 | CONNECTOR | DISPLAY SELECTOR | 371-0213-050 | 1004 1104 |
| P882-KP | KEY PLUG | P882 CONNECTOR | 629-8339-001 | 1004 1104 |
| P882-PIN | CONTACT | P882 CONNECTOR | 371-0213-110 | 1004 1104 |
| P882-SLK | SCREW LOCK | P882 CONNECTOR | 371-0040-040 | 1004 1104 |
| P882-SRF | STRAIN RELIEF | P882 CONNECTOR | 371-0148-000 | 1004 1104 |
| P882-SRF | STRAIN RELIEF | P882 CONNECTOR | 371-0399-280 | 1004 1104 |
| P88-SBA | SHRINK BOOT | P88 CONNECTOR | M85049/60-1N10 | 1083 1104 |
| P89 | CONNECTOR | L PROP OVSP VALVE | MS3106R10SL4S | 1004 1082 |
| P89 | CONNECTOR | L PROP OVSP VALVE | MS3456L10SL4S | 1083 1104 |
| P891 | CONNECTOR | CONTROL PNL | 371-0213-030 | 1004 1104 |
| P891-PIN | CONTACT | P891 CONNECTOR | 371-0213-110 | 1004 1104 |
| P891-SLK | SCREW LOCK | P891 CONNECTOR | 371-0040-010 | 1004 1104 |
| P891-SRF | STRAIN RELIEF | P891 CONNECTOR | 371-0146-000 | 1004 1104 |
| P892 | CONNECTOR | CONTROL PNL | 371-0213-040 | 1004 1104 |
| P892-KP | KEY PLUG | P892 CONNECTOR | 629-8339-001 | 1004 1104 |
| P892-PIN | CONTACT | P892 CONNECTOR | 371-0213-110 | 1004 1104 |
| P892-SLK | SCREW LOCK | P892 CONNECTOR | 371-0040-010 | 1004 1104 |
| P892-SRF | STRAIN RELIEF | P892 CONNECTOR | 371-0147-000 | 1004 1104 |
| P894 | CONNECTOR | MPU BLOWER | MS3116F8-3S | 1004 1104 |
| P895 | CONNECTOR | DPU BLOWER | MS3116F8-3S | 1004 1104 |

| CODE | NOMENCLATURE | LOCATION | PART NUMBER | EFF. |
|---|---|---|---|---|
| P896 | CONNECTOR | MPU FAN MONITOR | 371-0213-010 | 1004 1104 |
| P896-PIN | CONTACT | P896 CONNECTOR | 371-0213-110 | 1004 1104 |
| P896-SRF | STRAIN RELIEF | P896 CONNECTOR | 371-0399-240 | 1004 1104 |
| P897 | CONNECTOR | DPU FAN MONITOR | 371-0213-010 | 1004 1104 |
| P897-PIN | CONTACT | P897 CONNECTOR | 371-0213-110 | 1004 1104 |
| P897-SRF | STRAIN RELIEF | P897 CONNECTOR | 371-0399-240 | 1004 1104 |
| P898 | CONNECTOR | LONGITUD ACCELLER | 372-2292-010 | 1004 1104 |
| P899 | CONNECTOR | NAVIGATION DISPLAY | MS27473T20F41S | 1004 1104 |
| P899-BS | BACKSHELL | P899 CONNECTOR | M85049-27-20N | 1004 1104 |
| P89-SBA | SHRINK BOOT | P89- CONNECTOR | M85049/60-1N10 | 1083 1104 |
| P8-LB | LIPPED BOOT | P8 CONNECTOR | 222K142-25 | 1083 1104 |
| P8-SBA | SHRINK BOOT | P8 CONNECTOR | M85049/60-1N12 | 1083 1104 |
| P9 | CONNECTOR | BAT TEMP SENSOR | MS3116F8-3S | 1004 1104 |
| P90 | CONNECTOR | R PROPELLER RPM XDCR | MS3106R10SL4S | 1004 1082 |
| P90 | CONNECTOR | R PROPELLER RPM XDCR | MS3456L10SL-4S | 1083 1104 |
| P900 | CONNECTOR | RAD ALT INDICATOR | 371-0213-030 | 1004 1104 |
| P900-KP | KEY PLUG | P900 CONNECTOR | 629-8339-001 | 1004 1104 |
| P900-PIN | CONTACT | P900 CONNECTOR | 371-0213-110 | 1004 1104 |
| P900-SLK | SCREW LOCK | P900 CONNECTOR | 371-0040-010 | 1004 1104 |
| P900-SRF | STRAIN RELIEF | P900 CONNECTOR | 371-0146-000 | 1004 1104 |
| P901 | CONNECTOR | RAD ALT XCVR | 634-1021-001 | 1004 1104 |
| P901-PIN | CONTACT | P901 CONNECTOR | 372-2514-180 | 1004 1104 |
| P901-PIN | CONTACT | P901 CONNECTOR | 372-2514-110 | 1004 1104 |
| P902 | COAX CONNECTOR | RAD ALT RCV ANT | 357-7351-010 | 1004 1057 |
| P902 | COAX CONNECTOR | RAD ALT RCV ANT | 857-1511-020 | 1058 1104 |
| P903 | COAX CONNECTOR | RAD ALT XCVR | 857-1511-010 | 1058 1104 |
| P903 | COAX CONNECTOR | RAD ALT XCVR | 357-7204-010 | 1004 1057 |
| P905 | COAX CONNECTOR | RAD ALT XCVR | 357-7204-010 | 1004 1057 |
| P905 | COAX CONNECTOR | RAD ALT XCVR | 857-1511-010 | 1058 1104 |
| P907 | COAX CONNECTOR | RAD ALT XMT ANT | 357-7351-010 | 1004 1057 |
| P907 | COAX CONNECTOR | RAD ALT XMT ANT | 857-1511-020 | 1058 1104 |
| P908 | CONNECTOR | MULTIFUNC DISPLAY | MS27473T16F35SB | 1004 1104 |
| P908-BS | BACKSHELL | P908 CONNECTOR | M85049-27-16N | 1004 1104 |
| P909 | CONNECTOR | PRI FLIGHT DISPLAY | MS27473T20F41S | 1004 1104 |

| CODE | NOMENCLATURE | LOCATION | PART NUMBER | EFF. |
|---|---|---|---|---|
| P909-BS | BACKSHELL | P909 CONNECTOR | M85049-27-20N | 1004 1104 |
| P90-SBA | SHRINK BOOT | P90 CONNECTOR | M85049/60-1N10 | 1083 1104 |
| P91 | CONNECTOR | L PROPELLER RPM | MS3456L10SL4S | 1083 1104 |
| P91 | CONNECTOR | L PROPELLER RPM XDCR | MS3106R10SL4S | 1004 1082 |
| P911 | CONNECTOR | EFIS PNL | MS3476L16-26S | 1004 1104 |
| P911-BS | BACKSHELL | P911 CONNECTOR | M85049/31-16N | 1026 1104 |
| P911-BS | BACKSHELL | P911 CONNECTOR | M85049/31-16N | 1004 1025 |
| P911-BS | BACKSHELL | P911 CONNECTOR | M85049-31-16N | 1004 1104 |
| P912 | CONNECTOR | CPLT AUDIO CTRL PNL | MS3476L16-23P | 1004 1104 |
| P912-BS | BACKSHELL | P912 CONNECTOR | M85049/31-16N | 1004 1104 |
| P912-BS | BACKSHELL | P912 CONNECTOR | M85049-31-16N | 1004 1104 |
| P913 | CONNECTOR | PLT AUDIO CTRL PNL | MS3476L16-23P | 1004 1104 |
| P913-BS | BACKSHELL | P913 CONNECTOR | M85049-31-16N | 1004 1104 |
| P913-BS | BACKSHELL | P913 CONNECTOR | M85049/31-16N | 1004 1104 |
| P914 | CONNECTOR | CPLT AUDIO CTRL PNL | MS3476L16-23S | 1004 1104 |
| P914-BS | BACKSHELL | P914 CONNECTOR | M85049/31-16N | 1004 1104 |
| P914-BS | BACKSHELL | P914 CONNECTOR | M85049-31-16N | 1004 1104 |
| P915 | CONNECTOR | PLT AUDIO CTRL PNL | MS3476L16-23S | 1004 1104 |
| P915-BS | BACKSHELL | P915 CONNECTOR | M85049-31-16N | 1004 1104 |
| P915-BS | BACKSHELL | P915 CONNECTOR | M85049/31-16N | 1004 1104 |
| P916 | CONNECTOR | MFD FAN MONITOR | 371-0213-010 | 1004 1104 |
| P916-PIN | CONTACT | P916 CONNECTOR | 371-0213-110 | 1004 1104 |
| P916-SRF | STRAIN RELIEF | P916 CONNECTOR | 371-0399-240 | 1004 1104 |
| P917 | CONNECTOR | EHSI/EADI FAN MONIT | 371-0213-010 | 1004 1104 |
| P917-PIN | CONTACT | P917 CONNECTOR | 371-0213-110 | 1004 1104 |
| P917-SRF | STRAIN RELIEF | P917 CONNECTOR | 371-0399-240 | 1004 1104 |
| P918 | CONNECTOR | FWD PRESS BHD | MS27473E16F35S | 1004 1104 |
| P918-BS | BACKSHELL | P918 CONNECTOR | M85049-27-16N | 1004 1104 |
| P918-BS | BACKSHELL | P918 CONNECTOR | M85049/27-16N | 1004 1104 |
| P919 | COAX CONNECTOR | GPS SENSOR | 050-02658-0 | 1004 1104 |
| P91-SBA | SHRINK BOOT | P91 CONNECTOR | M85049/60-1N10 | 1083 1104 |
| P921 | COAX CONNECTOR | AMPLIFIER | M39012/30-0503 | 1004 1104 |
| P922 | CONNECTOR KIT | LRN COOLING FAN | 050-02204-0000 | 1004 1104 |
| P924 | CONNECTOR | FWD PRESS BHD | MS3476L20-39P | 1004 1104 |
| P924-BS | BACKSHELL | P924 CONNECTOR | M85049/31-20N | 1004 1104 |
| P924-BS | BACKSHELL | P924 CONNECTOR | M85049-31-20N | 1004 1104 |

| CODE | NOMENCLATURE | LOCATION | PART NUMBER | EFF. |
|---|---|---|---|---|
| P926 | CONNECTOR | FREON | MS3106R32-9S | 1004 1104 |
| P928 | CONNECTOR | VOICE RECORDER | MS3476L20-39P | 1004 1104 |
| P928-BS | BACKSHELL | P928 CONNECTOR | M85049/31-20N | 1004 1104 |
| P930 | CONNECTOR | TURN/SLIP IND | MS3106R14S2S | 1004 1104 |
| P931 | CONNECTOR | KA167 RUBIDIUM | 050-02238-0 | 1004 1104 |
| P932 | CONNECTOR | KA167 RUBIDIUM | 050-02238-0 | 1004 1104 |
| P933 | CONNECTOR | AUDIO SELECT PNL | DE9P | 1004 1104 |
| P933-HD | HOOD | P933 CONNECTOR | MD9-000J | 1004 1104 |
| P933-LKL | LOCKARM LEVER | P933 CONNECTOR | MD9-000VL | 1004 1104 |
| P934 | COAX CONNECTOR | AMPLIFIER | 050-03156-0 | 1004 1104 |
| P935 | COAX CONNECTOR | GPS ANT | P/0 050-03156-0 | 1004 1104 |
| P936 | RECEPTACLE | COCKPIT SPEAKER | 1-640508-0 | 1019 1104 |
| P936-PIN | PIN | P936 CONNECTOR | 640545-2 | 1019 1104 |
| P937 | RECEPTACLE | COCKPIT SPEAKER | 1-640508-0 | 1019 1104 |
| P937-PIN | PIN | P937 CONNECTOR | 640545-2 | 1019 1104 |
| P938 | CONNECTOR | GPS/OSS SENSOR | 1384 | 1004 1104 |
| P939 | CONNECTOR | UNS COMPUTER 1B | K12000 | 1004 1104 |
| P939 | CONNECTOR | UNS COMPUTER 1A | 1206 | 1004 1104 |
| P94 | CONNECTOR | R TURB RPM IND | MS3476L14-19S | 1004 1104 |
| P940 | CONNECTOR | GPS/OSS SENSOR | 1215 | 1004 1104 |
| P941 | CONNECTOR | UNS COMPUTER 1B | K12000 | 1004 1104 |
| P941 | CONNECTOR | UNS COMPUTER 1A | 1206 | 1004 1104 |
| P942 | CONNECTOR | GPS/OSS SENSOR | 1215 | 1004 1104 |
| P943 | CONNECTOR | UNS COMPUTER 1A | 1206 | 1004 1104 |
| P944 | CONNECTOR | GPS/OSS SENSOR | 1215 | 1004 1104 |
| P945 | CONNECTOR | CDU 1A | 1206 | 1004 1104 |
| P945 | CONNECTOR | CDU 1B | K12000 | 1004 1104 |
| P946 | CONNECTOR | GPS ANT | 1384 | 1004 1104 |
| P947 | CONNECTOR | OMEGA ANT | 1215 | 1004 1104 |
| P94-BS | BACKSHELL | P94 CONNECTOR | M85049-31-14N | 1004 1104 |
| P94-BS | BACKSHELL | P94 CONNECTOR | M85049/31-14N | 1004 1104 |
| P95 | CONNECTOR | L TURB RPM IND | MS3476L14-19S | 1004 1104 |
| P950 | CONNECTOR KIT | XPNDR TDR-94 | 628-8661-002 | 1004 1104 |
| P950-PIN | CONTACT | P950 CONNECTOR | 372-2514-180 | 1004 1104 |
| P950-PIN | CONTACT | P950 CONNECTOR | 372-2514-110 | 1004 1104 |
| P951 | CONNECTOR KIT | XPNDR TDR-94 | 628-8661-002 | 1004 1104 |
| P951-PIN | CONTACT | P951 CONNECTOR | 372-2514-110 | 1004 1104 |

| CODE | NOMENCLATURE | LOCATION | PART NUMBER | EFF. |
|---|---|---|---|---|
| P951-PIN | CONTACT | P951 CONNECTOR | 372-2514-180 | 1004 1104 |
| P95-BS | BACKSHELL | P95 CONNECTOR | M85049/31-14N | 1004 1104 |
| P95-BS | BACKSHELL | P95 CONNECTOR | M85049-31-14N | 1004 1104 |
| P96 | CONNECTOR | R TURB RPM XDCR | MS3456L10SL-4S | 1083 1104 |
| P96 | CONNECTOR | R TURB RPM XDCR | MS3106R10SL4S | 1004 1082 |
| P964 | CONNECTOR | CPLT ENC ALTM | MS3476L20-39SY | 1004 1104 |
| P964 | CONNECTOR | FREON AIR/COND | 205838-1 | 1004 1104 |
| P964-BS | BACKSHELL | P964 CONNECTOR | 206062-1 | 1004 1104 |
| P964-BS | BACKSHELL | P964 CONNECTOR | M85049-31-20N | 1004 1104 |
| P964-PIN | CONTACT | P964 CONNECTOR | 205090-1 | 1004 1104 |
| P968 | CONNECTOR | COCKPIT(RH) CAT2 | DAMA15S | 1004 1104 |
| P968-HD | HOOD | P968 CONNECTOR | D15-000KVL | 1004 1104 |
| P969 | CONNECTOR | COCKPIT(LH) CAT2 | DAMA15S | 1004 1104 |
| P969-HD | HOOD | P969 CONNECTOR | D15-000KVL | 1004 1104 |
| P96-SBA | SHRINK BOOT | P96 CONNECTOR | M85049/60-1N10 | 1083 1104 |
| P97 | CONNECTOR | L TURB RPM XDCR | MS3106R10SL4S | 1004 1082 |
| P97 | CONNECTOR | L TURB RPM XDCR | MS3456L10SL-4S | 1083 1104 |
| P970 | CONNECTOR | CONTROL UNIT | DB25S | 1004 1104 |
| P970-HD | HOOD | P970 CONNECTOR | D25-000JVL | 1004 1104 |
| P971 | RECEPTACLE | ANN.COUPLER CAT2 | DAMA15P | 1004 1104 |
| P971-HD | HOOD | P971 CONNECTOR | D15-000KVL | 1004 1104 |
| P972 | CONNECTOR | ANN.COUPLER CAT2 | DAMA15S | 1004 1104 |
| P972-HD | HOOD | P972 CONNECTOR | D15-000KVL | 1004 1104 |
| P973 | CONNECTOR | DIGITAL INT UNIT | 910426-3 P973 | 1004 1104 |
| P974 | CONNECTOR | DIGITAL INT UNIT | 910426-3 P974 | 1004 1104 |
| P975 | COAX CONNECTOR | LCD CABIN DISPLAY | 69475 | 1004 1104 |
| P976 | COAX CONNECTOR | LCD CABIN DISPLAY | 69475 | 1004 1104 |
| P977 | CONNECTOR | LCD CABIN DISPLAY | 205162-1 | 1004 1104 |
| P977-HD | HOOD | P977 CONNECTOR | 205729-1 | 1004 1104 |
| P977-PIN | PIN | P977 CONNECTOR | 205089-1 | 1004 1104 |
| P977-SLK | SCREW LOCK | P977 CONNECTOR | 371-0040-010 | 1004 1104 |
| P978 | CONNECTOR | LCD CABIN DISPLAY | MS3116E8-4SW | 1004 1104 |
| P979 | COAX CONNECTOR | LCD CABIN DISPLAY | 69475 | 1004 1104 |
| P97-SBA | SHRINK BOOT | P97 CONNECTOR | M85049/60-1N10 | 1083 1104 |
| P98 | CONNECTOR | R PITOT | MS3476L12-3S | 1004 1104 |
| P980 | CONNECTOR | MULTIDISCPLAYER | DAM11W1P | 1004 1104 |

| CODE | NOMENCLATURE | LOCATION | PART NUMBER | EFF. |
|---|---|---|---|---|
| P980-CXI | COAX INSERT | P980 CONNECTOR | DM53740-1 | 1004 1104 |
| P980-DSC | DEEP STRAIGHT CLAMP | P980 CONNECTOR | DA24658 | 1004 1104 |
| P980-HD | HOOD | P980 CONNECTOR | D15-000KVL | 1004 1104 |
| P980-SLK | SCREW LOCK | P980 CONNECTOR | D20419-16 | 1004 1104 |
| P981 | CONNECTOR | MULTIDISCPLAYER | 205162-1 | 1004 1104 |
| P981-DSC | DEEP STRAIGHT CLAMP | P981 CONNECTOR | DE24657 | 1004 1104 |
| P981-HD | HOOD | P981 CONNECTOR | 205729-1 | 1004 1104 |
| P981-PIN | PIN | P981 CONNECTOR | 205089-1 | 1004 1104 |
| P981-SLK | SCREW LOCK | P981 CONNECTOR | D20419-16 | 1004 1104 |
| P981-SLK | SCREW LOCK | P981 CONNECTOR | D20419-16 | 1004 1104 |
| P982 | CONNECTOR | INTERF VIDEO SYS | 206044-1 | 1004 1104 |
| P982-CP | CABLE CLAMP | P982- CONNECTOR | 206070-1 | 1004 1104 |
| P982-PIN | FEMALE PIN | P982 CONNECTOR | 66105-3 | 1004 1104 |
| P988 | RECEPTACLE | LRN ANN.COUPLER | 205209-1 | 1004 1104 |
| P988-HD | HOOD | P988 CONNECTOR | MD-37-000-J | 1004 1104 |
| P988-HD | HOOD | P988 CONNECTOR | MD37-000J | 1004 1104 |
| P988-LKL | LOCKARM LEVER | P988 CONNECTOR | MD37-000VL | 1004 1104 |
| P988-PIN | CONTACT | P988 CONNECTOR | 205090-1 | 1004 1104 |
| P98-BS | BACKSHELL | P98 CONNECTOR | M85049-31-12N | 1004 1104 |
| P99 | CONNECTOR | L PITOT | MS3476L12-3S | 1004 1104 |
| P992 | CONNECTOR | DIM/XPNDR ADPT UNIT | DAMA15S | 1004 1104 |
| P992-HD | HOOD | P992 CONNECTOR | D15-000KVL | 1004 1104 |
| P999 | CONNECTOR | INTERF VIDEO SYS | 206044-1 | 1004 1104 |
| P999-CP | CABLE CLAMP | P999- CONNECTOR | 206070-1 | 1004 1104 |
| P999-PIN | PIN | P999 CONNECTOR | 66103-1 | 1004 1104 |
| P99-BS | BACKSHELL | P99 CONNECTOR | M85049-31-12N | 1004 1104 |
| G180 | GROUND STUD | DUCT FAIL SWITCH | MS35206-228 | 1083-9999 |
| G181 | GROUND STUD | DUCT FAIL SWITCH | MS35206-228 | 1083-9999 |
| G183 | GROUND STUD | DUCT FAIL SWITCH | MS35206-228 | 1083-9999 |
| G185 | CABLE CLAMP | ADAS+ | 200686-1 | 1004-9999 |
| G185 | GROUNDING BLOCK | ADAS+ | 203540-1 | 1004-9999 |
| G185 | HOUSING | ADAS+ | 201298-1 | 1004-9999 |
| G185 | JACKSCREW | ADAS+ | 203535-2 | 1004-9999 |
| J1933 | RECEPTACLE | AUX PWR 28 VDC | 206430-2 | 1004-1104 |
| J1934 | BACKSHELL | AUX PWR 28VDC | M85049-31-12N | 1004-1104 |
| J1934 | CAP | AUX PWR 28VDC | 660-009M12S5-01 | 1004-1104 |
| J1934 | RECEPTACLE | AUX PWR 28VDC | MS3470L12-3S | 1004-1104 |

| CODE | NOMENCLATURE | LOCATION | PART NUMBER | EFF. |
|---|---|---|---|---|
| J1935 | CONTACT | CABIN LTS | 350689-3 | 1004-1104 |
| J1935 | MATING CONNECTOR | CABIN LTS | 350866-1 | 1004-1104 |
| J1935 | SLEEVE | CABIN LTS | 3185-33 | 1004-1104 |
| J1939 | CABLE CLAMP | CONNECTOR J1939 | 206070-1 | 1078-1078 |
| J1939 | CONTACT SOCKET(20GA) | CONNECTOR J1939 | 66105-3 | 1078-1078 |
| J1939 | RECEPTACLE | INTERCONNECTION | 206043-1 | 1078-1078 |
| J1986 | CONTACT | CABIN LTS | 350689-3 | 1004-1104 |
| J1986 | MATING CONNECTOR | CABIN LTS | 350866-1 | 1004-1104 |
| J1986 | SLEEVE | CABIN LTS | 3185-33 | 1004-1104 |
| J1991 | CONTACT | INTERNAL GALLEY | 350689-3 | 1004-1104 |
| J1991 | MATING CONNECTOR | INTERNAL GALLEY | 350866-1 | 1004-1104 |
| J1991 | SLEEVE | INTERNAL GALLEY | 3185-33 | 1004-1104 |
| J1999 | CONTACT | INTERNAL GALLEY | 350689-3 | 1004-1104 |
| J1999 | MATING CONNECTOR | INTERNAL GALLEY | 350866-1 | 1004-1104 |
| J1999 | SLEEVE | INTERNAL GALLEY | 3185-33 | 1004-1104 |
| J270 | BACKSHELL | CONNECTOR J270 | 310HS001Z113-204 | 1083-9999 |
| J270 | RIGHTANGLE LIPPED BOOT | CONNECTOR J270 | 222K132-25 | 1083-9999 |
| J270 | WALL NUT RECEPTACLE | FWD FIREWALL | D38999/24KC98SN | 1083-9999 |
| J287 | RECEPTACLE | DUAL MASTER COUPLER | MS3112E14-19P | 1004-1104 |
| J288 | SHRINK BOOT ADAPTER | CONNECTOR J288 | 310HS001Z121-204 | 1083-1104 |
| J288 | SOCKET (AL) | AL TC2 (FEMALE) | M39029/88-487 | 1083-1104 |
| J288 | SOCKET (CR) | AL TC2 (FEMALE) | M39029/88-488 | 1083-1104 |
| J289 | SHRINK BOOT ADAPTER | CONNECTOR J289 | 310HS001Z121-204 | 1083-1104 |
| J289 | SOCKET (AL) | AL TC2 (FEMALE) | M39029/88-487 | 1083-1104 |
| J289 | SOCKET (CR) | AL TC2 (FEMALE) | M39029/88-488 | 1083-1104 |
| J292 | CABLE CLAMP | AUXILIARY PWR. | 206062-3 | 1004-1104 |
| J292 | CONTACT SOCKET | AUXILIARY PWR. | 66101-1 | 1004-1104 |
| J292 | RECEPTACLE | AUXILIARY PWR. | 206430-2 | 1004-1104 |
| J293 | CABLE CLAMP | AUXILIARY PWR. | 206062-3 | 1004-1104 |
| J293 | CONTACT SOCKET | AUXILIARY PWR. | 66101-1 | 1004-1104 |
| J293 | RECEPTACLE | AUXILIARY PWR. | 206430-2 | 1004-1104 |
| J294 | RECEPTACLE | AUXILIARY PWR. | 006811 | 1004-1104 |
| J295 | RECEPTACLE | AUXILIARY PWR. | 006811 | 1004-1104 |
| J298 | PIN | RECEPTACLE J298 | 640545-2 | 1004-1104 |
| J298 | RECEPTACLE | FLASH LIGHT SYSTEM | 1-640508-0 | 1004-1104 |

| CODE | NOMENCLATURE | LOCATION | PART NUMBER | EFF. |
|---|---|---|---|---|
| J319 | RECEPTACLE | FLIR | MS3100R20-23S | 1004-1104 |
| J320 | RECEPTACLE | FLIR | MS27466T19B35P | 1004-1104 |
| J321 | BACKSHELL | FLIR | 057-0717-002 | 1004-1104 |
| J321 | RECEPTACLE | FLIR | MS3476L12-10S | 1004-1104 |
| J323 | RECEPTACLE | FLIR | MS27468T19B35S | 1004-1104 |
| J325 | RECEPTACLE | FLIR | DEMA9P | 1004-1104 |
| J328 | BNC CONNECTOR | FLIR/TV | 69475 | 1004-1104 |
| J332 | CONNECTOR | FLIR | MS3474W12-10S | 1004-1104 |
| J4058 | RECEPTACLE | TRIM SWITCH PANEL | MS3122E16-26P | 1104-9999 |
| J4059 | RECEPTACLE | TRIM SWITCH PANEL | MS3122E16-26S | 1104-9999 |
| J5311 | LOCKING D-SUB | HANDSET CONN AVANTI | D15-000KVL | 1078-1078 |
| J5311 | MATING CONNECTOR | HANDSET CONN AVANTI | DAMA15S | 1078-1078 |
| J719 | LOCK-LEVER | TAWS RELAY UNIT-ASSY | D15-000KVL | 1004-1104 |
| J719 | RECEPTACLE | TAWS RELAY UNIT-ASSY | DAMA15P | 1004-1104 |
| J728 | RECEPTACLE | HF HAND MIC | PJT430 | 1004-1104 |
| J759 | BACKSHELL | STORMSCOPE ANT. | M85049/31-14N | 1004-1104 |
| J759 | RECEPTACLE | STORMSCOPE ANT. | MS3474L14-19S | 1004-1104 |
| J814 | COAX CONNECTOR | TACAN SUPPRESSION | M39012/19B0003 | 1004-1104 |
| J825 | COAX CONNECTOR | TACAN SUPPRESSION | M39012/19B0003 | 1004-1104 |
| J838 | ADAPTER | XPNDR2 SIGNAL | UG274U | 1004-1104 |
| J927 | BACKSHELL | J927 RECEPTACLE | M85049/31-20N | 1004-1104 |
| J927 | RECEPTACLE | FLT DATA RECORDER | MS3474L20-39S | 1004-1104 |
| J952 | RECEPTACLE | XPNDR TDR-94 | M24308/4-261 | 1004-1104 |
| J952 | SCREW-LOCK | XPNDR TDR-94 | D20418-2 | 1004-1104 |
| J952 | STRAIN RELIEF | XPNDR TDR-94 | 371-0146-000 | 1004-1104 |
| J954 | LATCH | MIC ADAPTER | MD15-000-0V3 | 1004-1104 |
| J954 | MATING CONNECTOR | MIC ADAPTER | 205162-1 | 1004-1104 |
| J954 | PIN | MIC ADAPTER | 205089-1 | 1004-1104 |
| J954 | RECEPTACLE | DUAL MIC ADAPTER | DEM9P1A7N | 1004-1104 |
| J955 | ADAPTER | VHF COM 3 (ANT) | M55339/20-00201 | 1004-1104 |
| J957 | LATCH | MIC ADAPTER | MD15-000-0V3 | 1004-1104 |
| J957 | MATING CONNECTOR | MIC ADAPTER | 205162-1 | 1004-1104 |
| J957 | PIN | MIC ADAPTER | 205089-1 | 1004-1104 |

| CODE | NOMENCLATURE | LOCATION | PART NUMBER | EFF. |
|---|---|---|---|---|
| J957 | RECEPTACLE | DUAL MIC ADAPTER | DEM9P1A7N | 1004-1104 |
| J970 | CONNECTOR | FREON AIR/COND | DB25P | 1004-1104 |
| J970 | LATCH | FREON AIR/COND | MD15-000-0V3 | 1004-1104 |
| J971 | LATCH | CONNECTOR J971 | MD15-000-0V3 | 1004-1104 |
| J971 | RECEPTACLE | ANN.COUPLER CAT2 | DAMA15S | 1004-1104 |
| J972 | LATCH | CONNECTOR J972 | MD15-000-0V3 | 1004-1104 |
| J972 | RECEPTACLE | ANN.COUPLER CAT2 | DAMA15P | 1004-1104 |
| J992 | LATCH | J992 CONNECTOR | MD15-000-0V3 | 1004-1104 |
| J992 | RECEPTACLE | DIM/XPNDR ADPT UN | DA15P | 1004-1104 |
| J997 | CONTACT | CONNECTOR J997 | 205090-1 | 1004-1104 |
| J997 | HOOD | CONNECTOR J997 | MD9-000J | 1004-1104 |
| J997 | RECEPTACLE | INTERFACE S649 | 205161-1 | 1004-1104 |
| J998 | CONTACT | CONNECTOR J998 | 205090-1 | 1004-1104 |
| J998 | HOOD | CONNECTOR J998 | MD9-000J | 1004-1104 |
| J998 | RECEPTACLE | INTERFACE S648 | 205161-1 | 1004-1104 |
| P1001 | CONNECTOR | CRYPTO MOUNT KIT | ONO89560-1 | 1004-1104 |
| P1022 | COAX INSERT | CONNECTOR P1022 | 372-2519-040 | 1004-1104 |
| P1022 | CONNECTOR KIT | VHF COM 3 XCVR | 634-1022-001 | 1004-1104 |
| P1022 | CONTACT | CONNECTOR P1022 | 372-2514-110 | 1004-1104 |
| P1022 | CONTACT | CONNECTOR P1022 | 372-2514-180 | 1004-1104 |
| P1023 | BACKSHELL | CONNECTOR P1023 | M85049-31-20N | 1004-1104 |
| P1023 | MATING CONNECTOR | VHF COM 3 CTRL UNIT | MS3476L20-41SW | 1004-1104 |
| P1024 | COAX CONNECTOR | VHF COM 3 (ANT) | UG88BU | 1004-1104 |
| P1025 | COAX CONNECTOR | VHF COM 3 (ANT) | UG88BU | 1004-1104 |
| P1026 | COAX CONNECTOR | V/UHF XCVR (ANT) | UG536A/U | 1004-1104 |
| P1029 | BACKSHELL | CONNECTOR P1029 | M85049/31-20N | 1004-1104 |
| P1029 | MATING CONNECTOR | AFT PRESS BHD | MS3476L20-41P | 1004-1104 |
| P1031 | CONNECTOR | DUAL MODE MIC ADAPT | ..... | 1004-1104 |
| P1056 | COAX CONNECTOR | VHF 22D (AMI 1) | 225886-1 | 1004-1104 |
| P1065 | COAX CONNECTOR | TACAN ANTENNA | M39012/26B0006 | 1004-1104 |
| P1066 | COAX CONNECTOR | TACAC ANTENNA | M39012/16B0007 | 1004-1104 |
| P1070 | COAX CONNECTOR | TACAC SUPPRESSION | M39012/16B0007 | 1004-1104 |
| P1071 | COAX CONNECTOR | TACAC SUPPRESSION | M39012/16B0007 | 1004-1104 |
| P1080 | CONNECTOR-COAX | XPNDR2 SIGNAL | M39012/17B0004 | 1004-1104 |

| CODE | NOMENCLATURE | LOCATION | PART NUMBER | EFF. |
|---|---|---|---|---|
| P1080 | CONNECTOR-COAX | XPNDR2 SIGNAL | UG89BU | 1004-1104 |
| P1081 | CONNECTOR COAX | XPNDR2 SIGNAL | M39012/16B0007 | 1004-1104 |
| P1081 | CONNECTOR-COAX | XPNDR2 SIGNAL | UG88BU | 1004-1104 |
| P1083 | MATING CONNECTOR | TAWS | P/OMD41-1108(5V) | 1004-1104 |
| P1084 | MATING CONNECTOR | TAWS | P/O817-18000-002 | 1004-1104 |
| P1085 | MATING CONNECTOR | TAWS | P/O817-18000-002 | 1004-1104 |
| P1085 | RIGHT ANGLE BACKSHELL | TAWS | P/O817-18000-002 | 1004-1104 |
| P1086 | CONNECTOR COAX | XPNDR2 SIGNAL | M39012/16B0007 | 1004-1104 |
| P1086 | CONNECTOR-COAX | XPNDR2 SIGNAL | UG88BU | 1004-1104 |
| P1091 | BACKSHELL | PPS/GPS RECEIVER J1 | P/O 33868-00 | 1004-1104 |
| P1091 | MATING CONNECTOR | PPS/GPS RECEIVERJ1 | P/O 33868-00 | 1004-1104 |
| P1093 | BACKSHELL | PPS/GPS RECEIVER J2 | P/O 33868-00 | 1004-1104 |
| P1093 | MATING CONNECTOR | PPS/GPS RECEIVER J2 | P/O 33868-00 | 1004-1104 |
| P1095 | COAX SMA CONNECTOR | PPS/GPS RECEIVER J3 | P/O 33868-00 | 1004-1104 |
| P1097 | MATING CONNECTOR | PPS/GPS RECEIVER J4 | P/O 33868-00 | 1004-1104 |
| P1103 | COAX TNC CONNECTOR | PPS/GPS ANTENNA | P/O 33868-00 | 1004-1104 |
| P1106 | BACKSHELL | IFF TDR. UNIT | M85049/27-21N | 1004-1104 |
| P1106 | MATING CONNECTOR | IFF TDR. UNIT | MS27467T21B35S | 1004-1104 |
| P1107 | BACKSHELL | IFF CONTROL UNIT | M85049/27-18N | 1004-1104 |
| P1107 | MATING CONNECTOR | IFF CONTROL UNIT | MS27473E18B35S | 1004-1104 |
| P1108 | MATING CONNECTOR | IFF TDR. UNIT | M22TR-10XP6-NH55 | 1004-1104 |
| P1109 | COAXIAL CONNECTOR | PRI TRANSPONDER | 1-225550-2 | 1004-1104 |
| P1110 | CONNECTOR COAX | PRI XPNDR ANTENNA | 225886-1 | 1004-1104 |
| P1111 | COAXIAL CONNECTOR | PRI TRANSPONDER | 1-225550-2 | 1004-1104 |
| P1112 | CONNECTOR COAX | COAXIAL RELAY | 1-225550-2 | 1004-1104 |
| P1113 | CONNECTOR COAX | COAXIAL RELAY | 225886-2 | 1004-1104 |
| P1114 | CONNECTOR COAX | COAXIAL RELAY | M39012/01B0012 | 1004-1104 |
| P1115 | CONNECTOR KIT | XPNDR TDR-94 | 628-8661-002 | 1004-1104 |
| P1115 | CONTACT | XPNDR TDR-94 | 372-2514-110 | 1004-1104 |
| P1115 | CONTACT | XPNDR TDR-94 | 372-2514-180 | 1004-1104 |
| P1116 | CONNECTOR KIT | XPNDR TDR-94 | 628-8661-002 | 1004-1104 |
| P1116 | CONTACT | XPDR TDR-94 | 372-2514-180 | 1004-1104 |
| P1116 | CONTACT | XPNDR TDR-94 | 372-2514-110 | 1004-1104 |

| CODE | NOMENCLATURE | LOCATION | PART NUMBER | EFF. |
|---|---|---|---|---|
| P1117 | BACKSHELL | P1117 CONNECTOR | M85049-31-20N | 1004-1104 |
| P1117 | MATING CONNECTOR | XPNDR CTRL UNIT | MS3476L20-41SY | 1004-1104 |
| P1118 | BACKSHELL | COAXIAL RELAY | M85049/52S10N | 1004-1104 |
| P1118 | MATING CONNECTOR | COAXIAL RELAY | MS3476L10-6S | 1004-1104 |
| P1211 | MATING CONNECTOR | ANN.COUPLER | CONN 37 PIN | 1038-1104 |
| P1504 | CONNECTOR | ADVISORY LTS | 1-640518-0 | 1004-1104 |
| P1504 | SOCKET | CONNECTOR P1504 | 350666-2 | 1004-1104 |
| P1707 | CONNECTOR | AUDIO DISTR UNIT | DC37S | 1004-1104 |
| P1707 | HOOD | CONNECTOR P1707 | D37-000JVL | 1004-1104 |
| P1711 | CONNECTOR | AUDIO PWR AMPL | DB25S | 1004-1104 |
| P1711 | HOOD | CONNECTOR P1711 | D25-000JVL | 1004-1104 |
| P1712 | CONNECTOR | GALLEY | AC16707 | 1004-1104 |
| P1713 | CONNECTOR | GALLEY | AC16707 | 1004-1104 |
| P1714 | CABLE CLAMP | CONNECTOR P1714 | 206062-1 | 1004-1104 |
| P1714 | CONNECTOR | GLLEY | 206429-1 | 1004-1104 |
| P1714 | CONTACT PIN(16GA) | CONNECTOR P1714 | 66099-1 | 1004-1104 |
| P1823 | CONNECTOR | AUDIO PNL E1642 | 103957-3 | 1004-1104 |
| P1824A | CONNECTOR | PNL E1630A | 103644-9 | 1004-1104 |
| P1825 | CONNECTOR | PNL E1640 | 103644-7 | 1004-1104 |
| P1826 | CONNECTOR | PNL E1640 | 103644-7 | 1004-1104 |
| P1834 | CONNECTOR | PNL E1649 | 103644-9 | 1004-1104 |
| P1845 | CONNECTOR | PNL E1650 | 103644-9 | 1004-1104 |
| P1853A | CONNECTOR | PNL E1627A | 103644-5 | 1004-1104 |
| P1856 | CONNECTOR | PNL E1637 | 103644-9 | 1004-1104 |
| P1863 | CONNECTOR | PNL E1626 | 103957-3 | 1004-1104 |
| P1866A | CONNECTOR | PNL E1664A | 103644-5 | 1004-1104 |
| P1867 | CONNECTOR | SEAT 4 RH | 103957-3 | 1004-9999 |
| P1873 | CONNECTOR | AUDIO PNL E1655 | 103957-3 | 1004-1104 |
| P1874A | CONNECTOR | PNL E1631A | 103644-5 | 1004-1104 |
| P1877 | CONNECTOR | ELECT PNL 2 LEFT | 103644-7 | 1004-1104 |
| P1883A | CONNECTOR | PNL E1628A | 103644-5 | 1004-1104 |
| P1885 | CONNECTOR | AUDIO PNL E1656 | 103957-3 | 1004-1104 |
| P1887 | CONNECTOR | PNL E1658 | 103644-7 | 1004-1104 |
| P1893 | CONNECTOR | AUDIO PNL E1643 | 103957-3 | 1004-1104 |
| P1894A | CONNECTOR | PNL E1633A | 103644-9 | 1004-1104 |
| P1896 | CONNECTOR | ELECT PNL 1 LEFT | 103644-7 | 1004-1104 |
| P1897 | CONNECTOR | PNL E1641 | 103644-7 | 1004-1104 |
| P1903A | CONNECTOR | PNL E1636A | 103644-5 | 1004-1104 |
| P1904 | CONNECTOR | PNL E1654 | 103644-9 | 1004-1104 |
| P1905 | CONNECTOR | AUDIO PNL E1660 | 103957-3 | 1004-1104 |
| P1906 | CONNECTOR | PNL E1662 | 103644-7 | 1004-1104 |

| CODE | NOMENCLATURE | LOCATION | PART NUMBER | EFF. |
|---|---|---|---|---|
| P1907 | CONNECTOR | PNL E1662 | 103644-7 | 1004-1038 |
| P1907 | CONNECTOR | SEAT 3 RH | 103957-3 | 1039-9999 |
| P1915 | CONNECTOR | PNL E1653 | 103644-9 | 1004-1104 |
| P1933 | CABLE CLAMP | CONNECTOR 1933 | 206062-3 | 1004-1104 |
| P1933 | CONNECTOR | AUX PWR 28 VDC | 206429-1 | 1004-1104 |
| P1933 | CONTACT PIN(16GA) | CONNECTOR P1933 | 66099-1 | 1004-1104 |
| P1933 | CONTACT PIN(20GA) | CONNECTOR P1933 | 66103-1 | 1004-1104 |
| P1939 | CABLE CLAMP | CONNECTOR P1939 | 206070-1 | 1078-1078 |
| P1939 | CONNECTOR | INTERCONNECTION | 206044-1 | 1078-1078 |
| P1939 | CONTACT PIN(20GA) | CONNECTOR P1939 | 66103-1 | 1078-1078 |
| P1952 | MATING CONNECTOR | SWITCH PAD | 103957-1 | 1004-9999 |
| P1986 | CONTACT | CABIN LTS (EVENT) | 350690-3 | 1004-1104 |
| P1986 | MATING CONNECTOR | CABIN LTS (EVENT) | 350865-1 | 1004-1104 |
| P1986 | SLEEVE | CABIN LTS (EVENT) | 3185-32 | 1004-1104 |
| P1988 | CONTACT | CABIN LTS | 350690-7 | 1004-1104 |
| P1988 | MATING CONNECTOR | CABIN LTS | 350779-1 | 1004-1104 |
| P1990 | CONTACT | CABIN LTS | 350690-3 | 1004-1104 |
| P1990 | MATING CONNECTOR | CABIN LTS | 350865-1 | 1004-1104 |
| P1990 | SLEEVE | CABIN LTS | 3185-32 | 1004-1104 |
| P1996 | CONTACT | INTERNO GALLEY | 350689-3 | 1004-1104 |
| P1996 | MATING CONNECTOR | INTERNO GALLEY | 350809-1 | 1004-1104 |
| P1997 | CONTACT | INTERNAL GALLEY | 350690-3 | 1004-1104 |
| P1997 | MATING CONNECTOR | INTERNAL GALLEY | 350865-1 | 1004-1104 |
| P1997 | SLEEVE | INTERNAL GALLEY | 3185-32 | 1004-1104 |
| P1998 | CONTACT | INTERNAL GALLEY | 350690-3 | 1004-1104 |
| P1998 | MATING CONNECTOR | INTERNAL GALLEY | 350865-1 | 1004-1104 |
| P1998 | SLEEVE | INTERNAL GALLEY | 3185-32 | 1004-1104 |
| P270 | LIPPED BOOT | CONNECTOR P270 | 202K142-25 | 1083-9999 |
| P270 | MATING CONNECTOR | FWD FIREWALL | D38999/26KC98PN | 1083-9999 |
| P270 | SHRINK BOOT ADAPTER | CONNECTOR P270 | 310HS001Z113-204 | 1083-9999 |
| P290 | MATING CONNECTOR | CONN FATIGUE METER | MK4 PLUG | 1004-1104 |
| P291 | BACKSHELL | DC TO DC CONV | M85049-31-14N | 1004-1104 |
| P291 | MATING CONNECTOR | DC TO DC CONV. | MS3476L14-5S | 1004-1104 |

| CODE | NOMENCLATURE | LOCATION | PART NUMBER | EFF. |
|---|---|---|---|---|
| P292 | CABLE CLAMP | AUXILIARY PWR. | 206062-3 | 1004-1104 |
| P292 | CONTACT PIN(16GA) | AUXILIARY PWR. | 66099-1 | 1004-1104 |
| P292 | MATING CONNECTOR | AUXILIARY PWR. | 206429-1 | 1004-1104 |
| P293 | CABLE CLAMP | AUXILIARY PWR. | 206062-3 | 1004-1104 |
| P293 | CONNECTOR | AUXILIARY PWR. | 206429-1 | 1004-1104 |
| P293 | CONTACT PIN(16GA) | AUXILIARY PWR. | 66099-1 | 1004-1104 |
| P294 | PLUG | AUXILIARY PWR. | 006804 | 1004-1104 |
| P295 | PLUG | AUXILIARY PWR. | 006804 | 1004-1104 |
| P298 | MATING CONNECTOR | FLASH LIGHT SYSTEM | 1-640518-0 | 1004-1104 |
| P298 | SOCKET | CONNECTOR P298 | 350666-2 | 1004-1104 |
| P316 | BACKSHELL | P316 CONNECTOR | M85049-31-10N | 1004-1104 |
| P316 | MATING CONNECTOR | CONN FATIGUE METER | MS3476L10-6S | 1004-1104 |
| P319 | MATING CONNECTOR | FLIR | MS3106R20-23P | 1004-1104 |
| P320 | MATING CONNECTORS | FLIR | MS27467T19B35S | 1004-1104 |
| P321 | BACKSHELL | FLIR | 057-0717-002 | 1004-1104 |
| P321 | MATING CONNECTORS | FLIR | MS3470L12-10S | 1004-1104 |
| P323 | MATING CONNECTOR | FLIR | MS2746T19B35P | 1004-1104 |
| P324 | MATING CONNECTOR | FLIR | MS27467T1B35S | 1004-1104 |
| P326 | MATING CONNETORS | FLIR | DAMA15P | 1004-1104 |
| P328 | MATING CONNECTOR | FLIR | UG88B/U | 1004-1104 |
| P329 | MATING CONNECTOR | FLIR | VOPT1167 | 1004-1104 |
| P332 | MATING CONNECTOR | FLIR (HCU) | P/O 18217-200 | 1004-1104 |
| P5287 | BACKSHELL | P5287 CONNECTOR | M85049/31S16N | 1078-1078 |
| P5287 | MATING CONNECTOR | SATCOM AVANTI XCVR | MS3476L16-26S | 1078-1078 |
| P5291 | COAXIAL CONNECTOR | SATCOM ANTENNA AVANT | 190309 | 1078-1078 |
| P640 | COAX INSERT | P640 CONNECTOR | 372-2519-100 | 1004-1104 |
| P640 | CONNECTOR KIT | PRI COM TRANSCEIVER | 634-1022-001 | 1004-1104 |
| P640 | CONTACT | P640 CONNECTOR | 372-2514-110 | 1004-1104 |
| P640 | CONTACT | P640 CONNECTOR | 372-2514-180 | 1004-1104 |
| P642 | COAX INSERT | P642 CONNECTOR | 372-2519-100 | 1004-1104 |
| P642 | CONNECTOR KIT | SEC COM TRANSCEIVER | 634-1022-001 | 1004-1104 |
| P642 | CONTACT | P642 CONNECTOR | 372-2514-110 | 1004-1104 |
| P642 | CONTACT | P642 CONNECTOR | 372-2514-180 | 1004-1104 |
| P644 | HSG CONN 29S | CONNECTOR CTRL PNL | P/O 050-02091-0001 | 1004-1104 |
| P645 | CONNECTOR | MODE-S EHS | MS3116F8-4S | 1004-1104 |

| CODE | NOMENCLATURE | LOCATION | PART NUMBER | EFF. |
|---|---|---|---|---|
| P646 | HSG CONN 9S | CONNECTOR CTRL PNL | P/O 050-02091-0001 | 1004-1104 |
| P649 | CONNECTOR | TRANSCEIVER COMM4 | P/O 050-03325-0000 | 1004-1104 |
| P649 | CONNECTOR MANIFOLD | TRANSCEIVER COMM4 | P/O 050-03325-0000 | 1004-1104 |
| P719 | CONNECTOR | TAWS RELAY UNIT-ASSY | DAMA15S | 1004-1104 |
| P719 | LATCH | TAWS RELAY UNIT-ASSY | MD15-000-0V3 | 1004-1104 |
| P719 | LOCK-LEVER | TAWS RELAY UNIT-ASSY | D15-000KVL | 1004-1104 |
| P759 | BACKSHELL | STORMSCOPE | M85049/31-14N | 1004-1104 |
| P759 | MATING CONNECTOR | STORMSCOPE | MS3476L14-19P | 1004-1104 |
| P814 | COAX CONNECTOR | TACAN SUPPRESSION | M39012/16B0007 | 1004-1104 |
| P819 | COAX CONECTOR | ANTENNA COMM4 | M39012/26B0006 | 1004-1104 |
| P820 | COAX CONNECTOR | ANTENNA COMM1 | 225699-1 | 1004-1104 |
| P824 | CONN TNC | COAX CONN ANT UFH/AM | P/O 050-03325-0000 | 1004-1104 |
| P825 | COAX CONNECTOR | TACAN SUPPRESSION | M39012/16B0007 | 1004-1104 |
| P827 | COAX CONNECTOR | IFF-BOTTOM ANT | M39012/26B0006 | 1004-1104 |
| P833 | COAX CONNECTOR | IFF | M39012/16B0007 | 1004-1104 |
| P846 | COAX CONNECTOR | COMM2 | M39012/16B0007 | 1004-1104 |
| P872 | CONTACT | ADC-85 COMPUTER | 372-2514-110 | 1004-1104 |
| P872 | MATING CONNECTOR | ADC-85 COMPUTER | 634-1021-001 | 1004-1104 |
| P874 | CONTACT | ADC-85 COMPUTER | 372-2514-110 | 1004-1104 |
| P874 | MATING CONNECTOR | ADC-85 COMPUTER | 634-1021-001 | 1004-1104 |
| P904 | COAXIAL CONNECTOR | TDR94D | 190608 | 1004-1104 |
| P906 | COAXIAL CONNECTOR | TDR94D ANT.TOP | 190613 | 1004-1104 |
| P927 | BACKSHELL | P927 CONNECTOR | M85049/31-20N | 1004-1104 |
| P927 | MATING CONNECTOR | FLT DATA REC & COMM4 | MS3476L20-39P | 1004-1104 |
| P952 | MATING CONNECTOR | XPNDR TDR-94 | M24308-2-283 | 1004-1104 |
| P952 | SCREW LOCK | XPNDR TDR-94 | 371-0040-010 | 1004-1104 |
| P952 | STRAIN RELIEF | XPNDR TDR-94 | 371-0146-000 | 1004-1104 |
| P953 | CONNECTOR-COAX | XPNDR TDR-94 SIGNAL | UG88BU | 1004-1104 |
| P954 | CONTACT | P954 CONNECTOR | 205090-1 | 1004-1104 |
| P954 | HOOD | P954 CONNECTOR | MD9-000J | 1004-1104 |
| P954 | LOCKARM LEVER | P954 CONNECTOR | MD9-000VL | 1004-1104 |
| P954 | RECEPTACLE | MICROPHONIC ADAPTER | 205161-1 | 1004-1104 |

| CODE | NOMENCLATURE | LOCATION | PART NUMBER | EFF. |
|---|---|---|---|---|
| P955 | MATING CONNECTOR | PRI V/UHF TRANSC. | M39012-01-0005 | 1004-1104 |
| P956 | BACKSHELL | CONNECTOR P956 | M85049/38-17 | 1004-1104 |
| P956 | MATING CONNECTOR | PRI V/UHF XCVR | D38999-26WE35SN | 1004-1104 |
| P957 | CONTACT | P957 CONNECTOR | 205090-1 | 1004-1104 |
| P957 | HOOD | P957 CONNECTOR | MD9-000J | 1004-1104 |
| P957 | LOCKARM LEVER | P957 CONNECTOR | MD9-000VL | 1004-1104 |
| P957 | RECEPTACLE | MICROPHONIC ADAPTER | 205161-1 | 1004-1104 |
| P958 | MATING CONNECTOR | PRI V/UHF ANTENNA | 225349-9 | 1004-1104 |
| P959 | BACKSHELL | P959 CONNECTOR | MS27506B14-2 | 1004-1104 |
| P959 | MATING CONNECTOR | PRI V/UHF CTRL PNL | MS27473T14B35S | 1004-1104 |
| P960 | MATING CONNECTOR | SEC V/UHF TRANSC. | M39012-01-0005 | 1004-1104 |
| P960 | MATING CONNECTOR | XPNDR TDR-94 | 225345-8 | 1004-1104 |
| P961 | BACKSHELL | P961 CONNECTOR | M85049/38-17 | 1004-1104 |
| P961 | CONNECTOR COAX | XPNDR TDR-94 ANTENNA | 225886-2 | 1004-1104 |
| P961 | MATING CONNECTOR | SEC V/UHF TRANSC. | D38999-26WE35SN | 1004-1104 |
| P962 | MATING CONNECTOR | SEC V/UHF ANTENNA | 225345-8 | 1004-1104 |
| P963 | BACKSHELL | P963 CONNECTOR | MS27506B14-2 | 1004-1104 |
| P963 | MATING CONNECTOR | SEC V/UHF CTRL PNL | MS27473T14B35S | 1004-1104 |
| P965 | BACKSHELL | CONNECTOR P965 | MS27506B18-2 | 1004-1104 |
| P965 | MATING CONNECTOR | IFF/ TRANSPONDER | MS27473T18B35S | 1004-1104 |
| P966 | COAX CONNECTOR | IFF/ TRANSPONDER | M39012-26-0101 | 1004-1104 |
| P967 | COAX CONNECTOR | IFF/XPNDR ANT | UG88BU | 1004-1104 |
| P983 | MATING CONNECTOR | SONY AM/FM CASSETTE | 1200 | 1004-1104 |
| P984 | MATING CONNECTOR | SONY AM/FM CASSETTE | 2-329083-1 | 1004-1104 |
| P985 | MATING CONNECTOR | DC TO DC CONVERTER | FURN.WITH UNIT | 1004-1104 |
| P986 | MATING CONNECTOR | SONY AM/FM CASSETTE | 3502 | 1004-1104 |
| P987 | MATING CONNECTOR | SONY AM/FM CASSETTE | 3502 | 1004-1104 |
| P989 | MATING CONNECTOR | TACAN CTRL PNL | MS3106R20-27P | 1004-1104 |
| P990 | BACKSHELL | CONNECTOR P990 | M85049-27-24N | 1004-1104 |

| CODE | NOMENCLATURE | LOCATION | PART NUMBER | EFF. |
|---|---|---|---|---|
| P990 | MATING CONNECTOR | TACAN XCVR | MS27467T25B35S | 1004-1104 |
| P991 | COAX CONNECTOR | TACAN XCVR | M39012/16-0101 | 1004-1104 |
| P993 | COAX CONNECTOR | TACAN XCVR | M39012/16-0101 | 1004-1104 |
| P994 | CONNECTOR DUMMY | DUMMY LOAD TACAN | 357-8999-020 | 1004-1104 |
| P995 | COAX CONNECTOR | TACAN XCVR | M39012/26-0101 | 1004-1104 |
| P996 | COAX CONNECTOR | TACAN ANTENNA | UG88BU | 1004-1104 |
| P997 | HOOD | CONNECTOR P997 | MD9-000J | 1004-1104 |
| P997 | LOCKARM LEVER | CONNECTOR P997 | MD9-000VL | 1004-1104 |
| P997 | MATING CONNECTOR | INTERFACE S649 | 205162-1 | 1004-1104 |
| P997 | PIN | CONNECTOR P997 | 205089-1 | 1004-1104 |
| P998 | HOOD | CONNECTOR P998 | MD9-000J | 1004-1104 |
| P998 | LOCKARM LEVER | CONNECTOR P998 | MD9-000VL | 1004-1104 |
| P998 | MATING CONNECTOR | INTERFACE S648 | 205162-1 | 1004-1104 |
| P998 | PIN | CONNECTOR P998 | 205089-1 | 1004-1104 |

CHAPTER 21 - AIR CONDITIONING
LIST OF EFFECTIVE PAGES

| CHAPTER SECTION SUBJECT | PAGE | SHEET | DATE |
|---|---|---|---|
| 21 - LOEP | 1 | | June 30/10 |
| | 2 | | June 30/10 |
| 21 - TOC | 1 | | June 30/10 |
| | 2 | | June 30/10 |
| 21-10-00 | 1 | | Oct. 30/09 |
| 21-10-00 | 2 | | Oct. 30/09 |
| 21-10-00 | 3 | 1 | Oct. 30/09 |
| 21-10-00 | 3 | 2 | Oct. 30/09 |
| 21-10-00 | 4 | 1 | Oct. 30/09 |
| 21-10-00 | 4 | 2 | Oct. 30/09 |
| 21-20-00 | 1 | | Oct. 30/09 |
| 21-20-00 | 2 | | Oct. 30/09 |
| 21-20-00 | 3 | | Oct. 30/09 |
| 21-20-00 | 4 | | Oct. 30/09 |
| 21-22-00 | 1 | | Oct. 30/09 |
| 21-23-00 | 1 | 1 | Oct. 30/09 |
| 21-23-00 | 1 | 2 | Oct. 30/09 |
| 21-23-00 | 2 | 1 | Oct. 30/09 |
| 21-23-00 | 2 | 2 | Oct. 30/09 |
| 21-23-00 | 3 | 1 | Oct. 30/09 |
| 21-23-00 | 3 | 2 | Oct. 30/09 |
| 21-31-00 | 1 | | Oct. 30/09 |
| 21-31-00 | 2 | | Oct. 30/09 |
| 21-40-00 | 1 | | Oct. 30/09 |
| 21-41-00 | 1 | 1 | Oct. 30/09 |
| 21-41-00 | 1 | 2 | Oct. 30/09 |
| 21-51-00 | 1 | | Oct. 30/09 |
| 21-51-00 | 2 | | Oct. 30/09 |
| 21-51-00 | 3 | 1 | Oct. 30/09 |
| 21-51-00 | 3 | 2 | Oct. 30/09 |
| 21-52-00 | 1 | 1 | Oct. 30/09 |
| 21-52-00 | 1 | 2 | Oct. 30/09 |
| 21-52-00 | 2 | 1 | Oct. 30/09 |
| 21-52-00 | 2 | 2 | Oct. 30/09 |
| 21-52-00 | 3 | 1 | June 30/10 |
| 21-52-00 | 3 | 2 | June 30/10 |

*Continued on the next page*

| CHAPTER SECTION SUBJECT | PAGE | SHEET | DATE |
|---|---|---|---|
| 21-52-00 | 4 | 1 | Oct. 30/09 |
| 21-52-00 | 4 | 2 | Oct. 30/09 |
| 21-52-00 | 5 | 1 | June 30/10 |
| 21-52-00 | 5 | 2 | June 30/10 |
| 21-52-00 | 6 | 1 | Oct. 30/09 |
| 21-52-00 | 6 | 2 | Oct. 30/09 |
| 21-52-00 | 7 | 1 | Oct. 30/09 |
| 21-52-00 | 7 | 2 | Oct. 30/09 |
| 21-60-00 | 1 | | Oct. 30/09 |

CHAPTER 21 - AIR CONDITIONING
TABLE OF CONTENTS


| SUBJECT | CHAPTER SECTION SUBJECT | PAGE | SHEET |
|---|---|---|---|
| COMPRESSION | | | |
| Air Bleed | 21-10-00 | 1 | |
| Air Bleed | 21-10-00 | 2 | |
| Air Bleed | 21-10-00 | 3 | 1 |
| Air Bleed | 21-10-00 | 3 | 2 |
| Air Bleed | 21-10-00 | 4 | 1 |
| Air Bleed | 21-10-00 | 4 | 2 |
| DISTRIBUTION | | | |
| Distribution System | 21-20-00 | 1 | |
| Distribution System | 21-20-00 | 2 | |
| Distribution System | 21-20-00 | 3 | |
| Distribution System | 21-20-00 | 4 | |
| Efis Fans | 21-22-00 | 1 | |
| Cabin Air Distribution (Opt. 1 e 2) | 21-23-00 | 1 | 1 |
| Cabin Air Distribution (Opt. 1 e 2) | 21-23-00 | 1 | 2 |
| Cabin Air Distribution (Opt. 5) | 21-23-00 | 2 | 1 |
| Cabin Air Distribution (Opt. 5) | 21-23-00 | 2 | 2 |
| Cabin Air Distribution (Opt. 8) | 21-23-00 | 3 | 1 |
| Cabin Air Distribution (Opt. 8) | 21-23-00 | 3 | 2 |
| PRESSURIZATION CONTROL | | | |
| Cabin Distribution | 21-31-00 | 1 | |
| Cabin Distribution | 21-31-00 | 2 | |
| HEATING | | | |
| Fight Compartment | 21-40-00 | 1 | |
| Flight Compartment | 21-41-00 | 1 | 1 |
| Flight Compartment | 21-41-00 | 1 | 2 |
| COOLING | | | |
| Avionics Fans | 21-51-00 | 1 | |
| Avionics Fans | 21-51-00 | 2 | |
| Avionics Fans | 21-51-00 | 3 | 1 |
| Avionics Fans | 21-51-00 | 3 | 2 |
| Freon Air Conditioner System KEITH (Opt.) | 21-52-00 | 1 | 1 |
| Freon Air Conditioner System KEITH (Opt.) | 21-52-00 | 1 | 2 |


*Continued on the next page*

| SUBJECT | CHAPTER SECTION SUBJECT | PAGE | SHEET |
|---|---|---|---|
| COOLING (Cont.) | | | |
| Freon Air Conditioner System KEITH (Opt.) With Protection | 21-52-00 | 2 | 1 |
| Freon Air Conditioner System KEITH (Opt.) With Protection | 21-52-00 | 2 | 2 |
| Freon Air Conditioner System Progres s.r.l. | 21-52-00 | 3 | 1 |
| Freon Air Conditioner System Progres s.r.l. | 21-52-00 | 3 | 2 |
| Freon Air Conditioner System KEITH | 21-52-00 | 4 | 1 |
| Freon Air Conditioner System KEITH | 21-52-00 | 4 | 2 |
| Freon Air Conditioner System KEITH With Protection (Opt.) | 21-52-00 | 5 | 1 |
| Freon Air Conditioner System KEITH With Protection (Opt.) | 21-52-00 | 5 | 2 |
| Freon Air Conditioner System KEITH Third Evaporator (Opt.) | 21-52-00 | 6 | 1 |
| Freon Air Conditioner System KEITH Third Evaporator (Opt.) | 21-52-00 | 6 | 2 |
| Freon Air Conditioner System KEITH Third Evaporator (Opt.) With Protection | 21-52-00 | 7 | 1 |
| Freon Air Conditioner System KEITH Third Evaporator (Opt.) With Protection | 21-52-00 | 7 | 2 |
| TEMPERATURE CONTROL | | | |
| Cabin Air Temperature Control | 21-60-00 | 1 | |

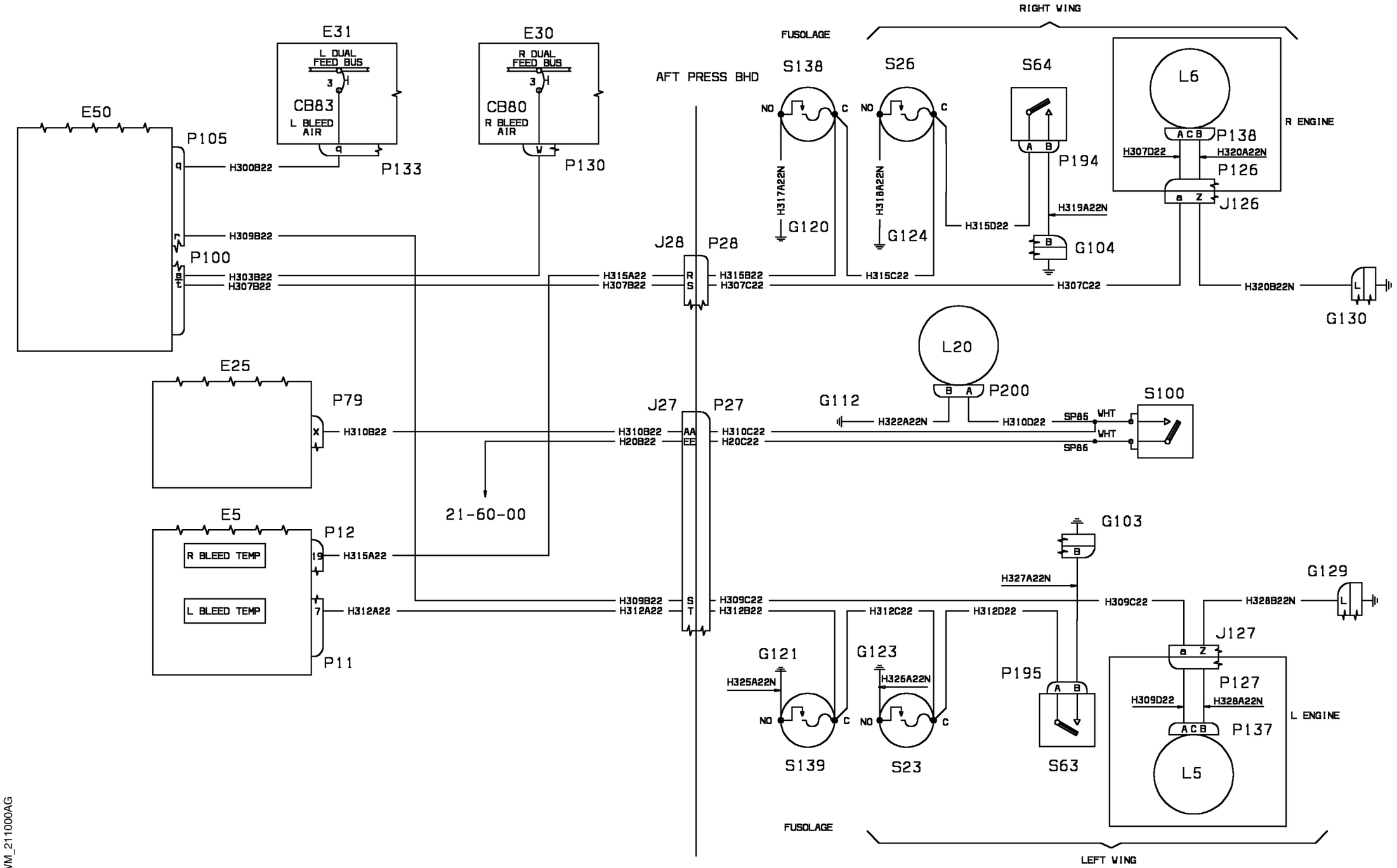
RIGHT WING
FUSOLAGE
E31
L DUAL FEED BUS
CB83
L BLEED AIR
P133
E30
R DUAL FEED BUS
CB80
R BLEED AIR
P130
AFT PRESS BHD
S138
S26
S64
L6
R ENGINE
P138
P194
P126
J126
G120
G124
G104
G130
E50
P105
P100
H300B22
H309B22
H303B22
H307B22
H317A22N
H318A22N
H315D22
H319A22N
H307D22
H320A22N
H315A22
H307B22
J28
P28
H315B22
H307C22
H315C22
H320B22N
L20
P200
G112
H322A22N
H310D22
S100
SP85
SP86
WHT
E25
P79
H310B22
J27
P27
H20B22
H310C22
H20C22
21-60-00
E5
P12
R BLEED TEMP
L BLEED TEMP
H315A22
H312A22
P11
H309B22
H312B22
H309C22
H312C22
H312D22
G103
H327A22N
G129
H328B22N
J127
P127
H328A22N
H309D22
L ENGINE
P137
L5
G121
G123
H325A22N
H326A22N
P195
S139
S23
S63
FUSOLAGE
LEFT WING

WM_211000AG

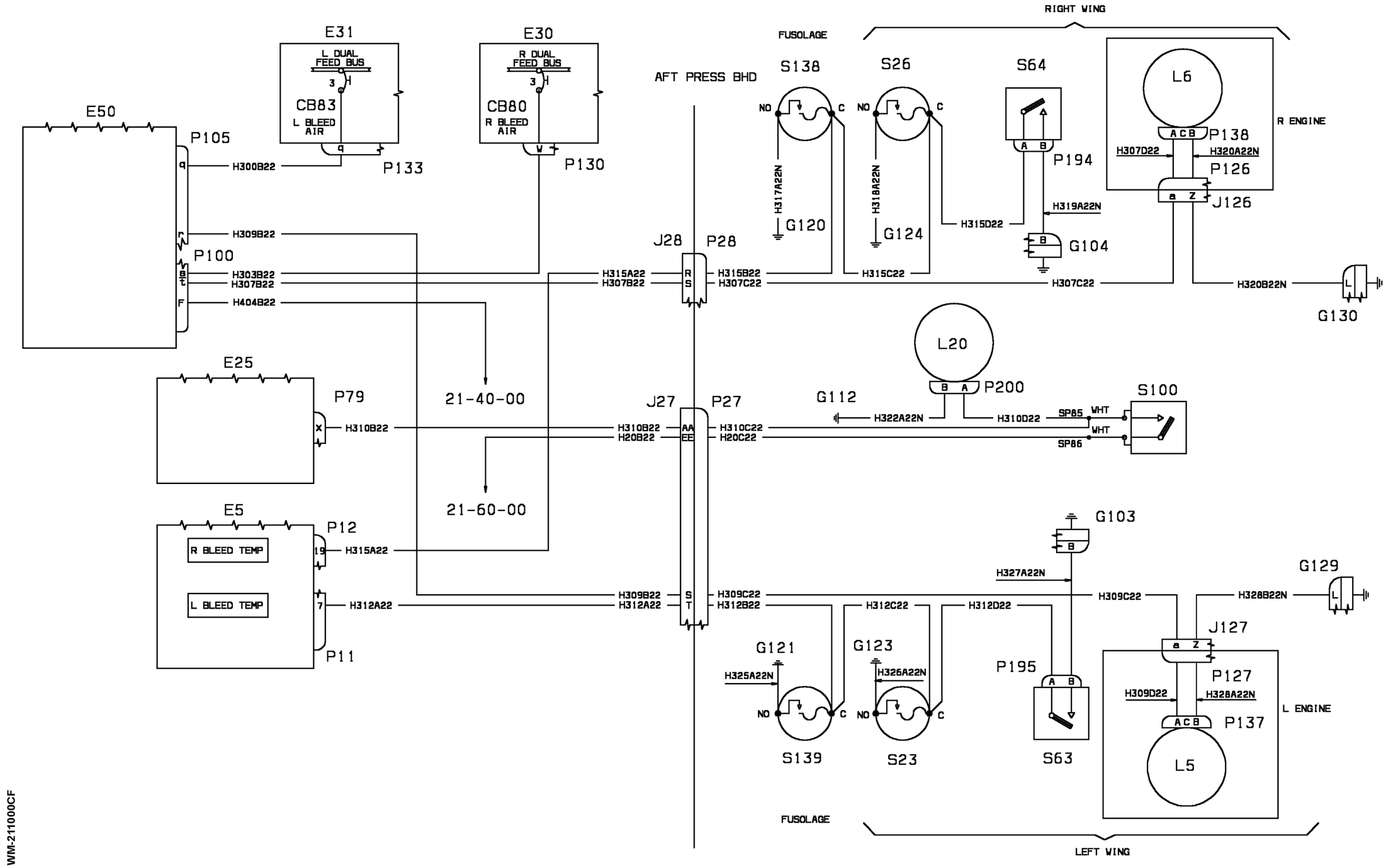


| EFFECTIVITY: | COMPRESSION |
|---|---|
| 1010-1040,1043,1045,<br>1050-1051,1054,1057 | Air Bleed |

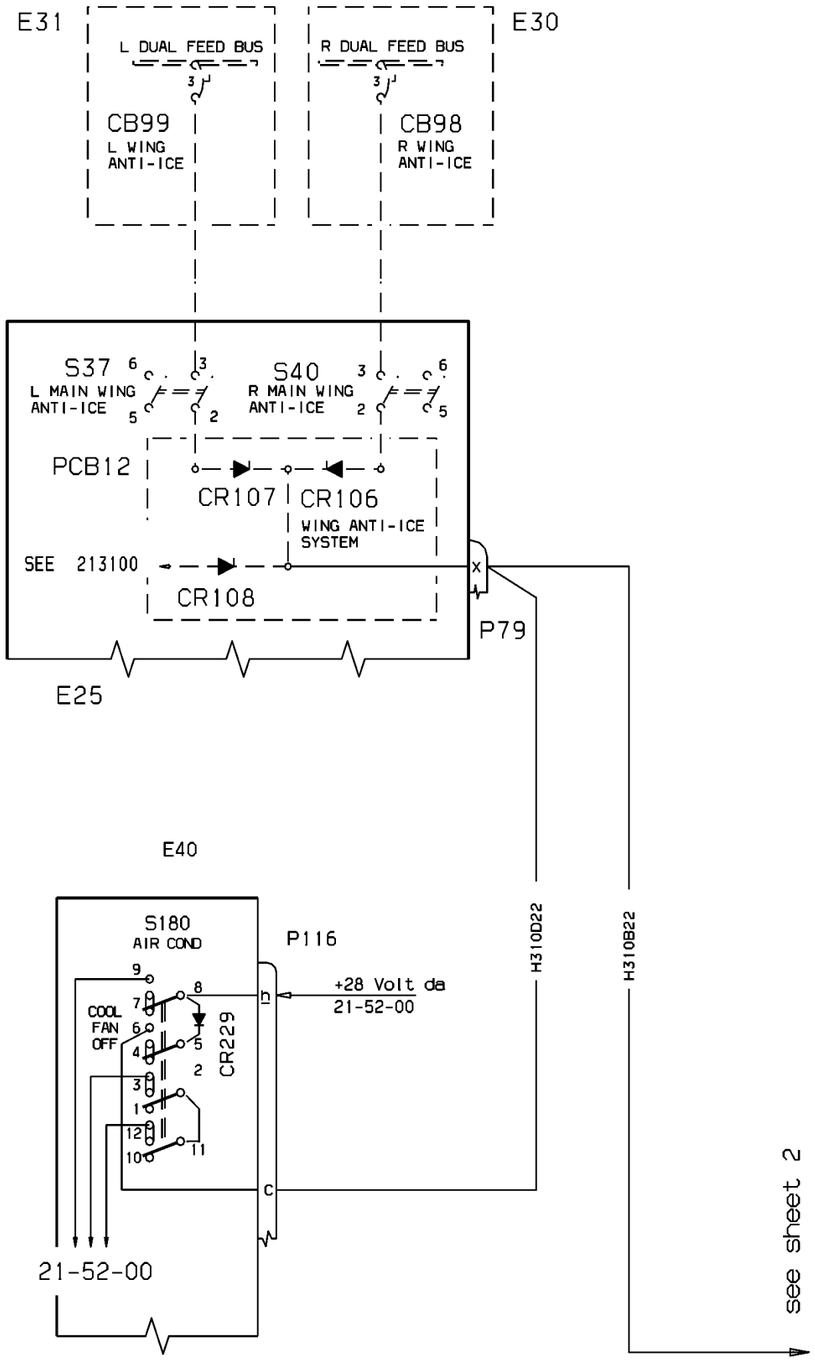


WM_211000CG1

| EFFECTIVITY: | COMPRESSION |
|---|---|
| 1041-1042,1044,<br>1046-1049,1052,1053,<br>1055,1056,1058-1087 | Air Bleed |

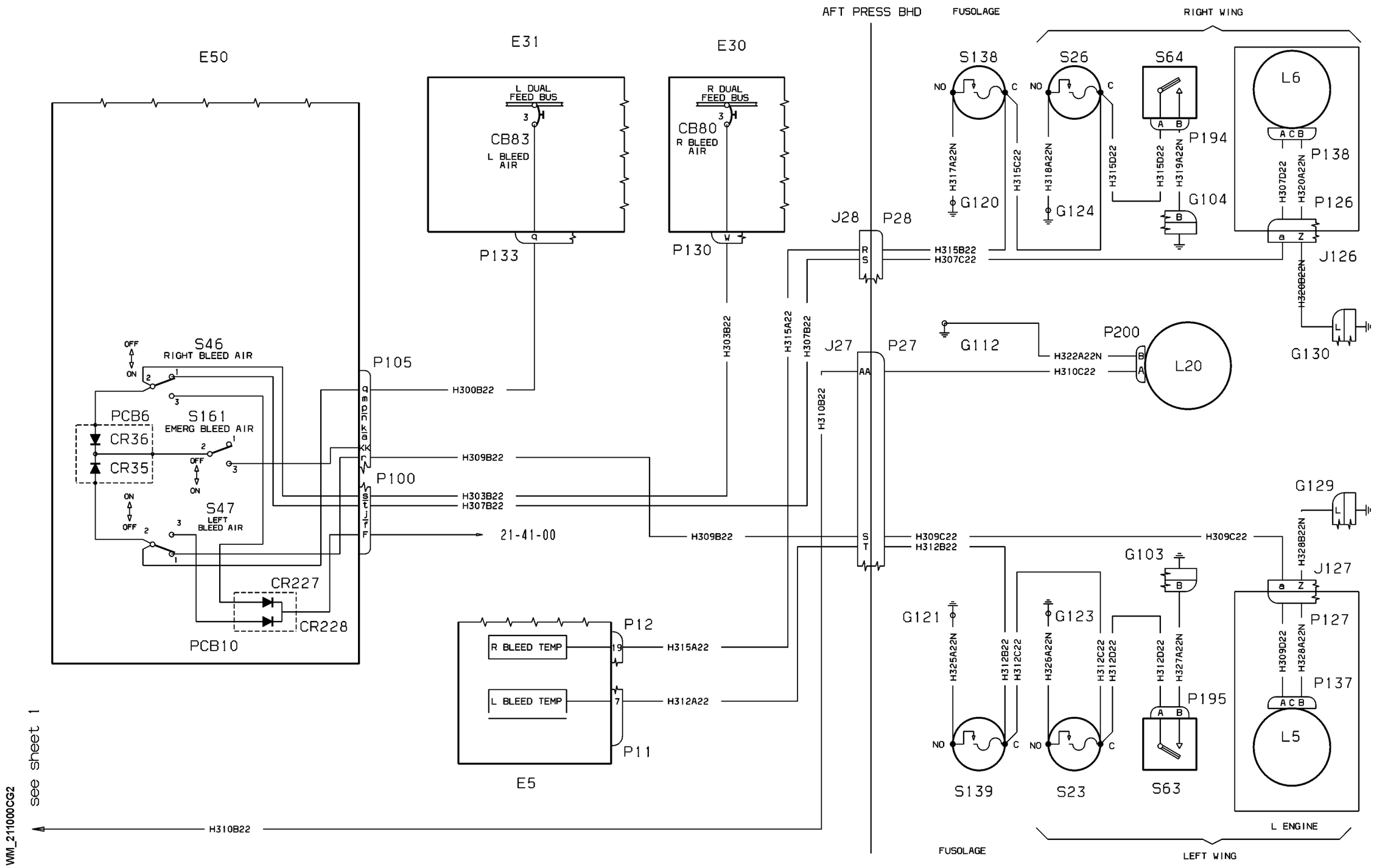


| EFFECTIVITY: | COMPRESSION |
|---|---|
| 1041-1042,1044,<br>1046-1049,1052,1053,<br>1055,1056,1058-1087 | Air Bleed |

**21-10-00**

WM_211000_P4_S1

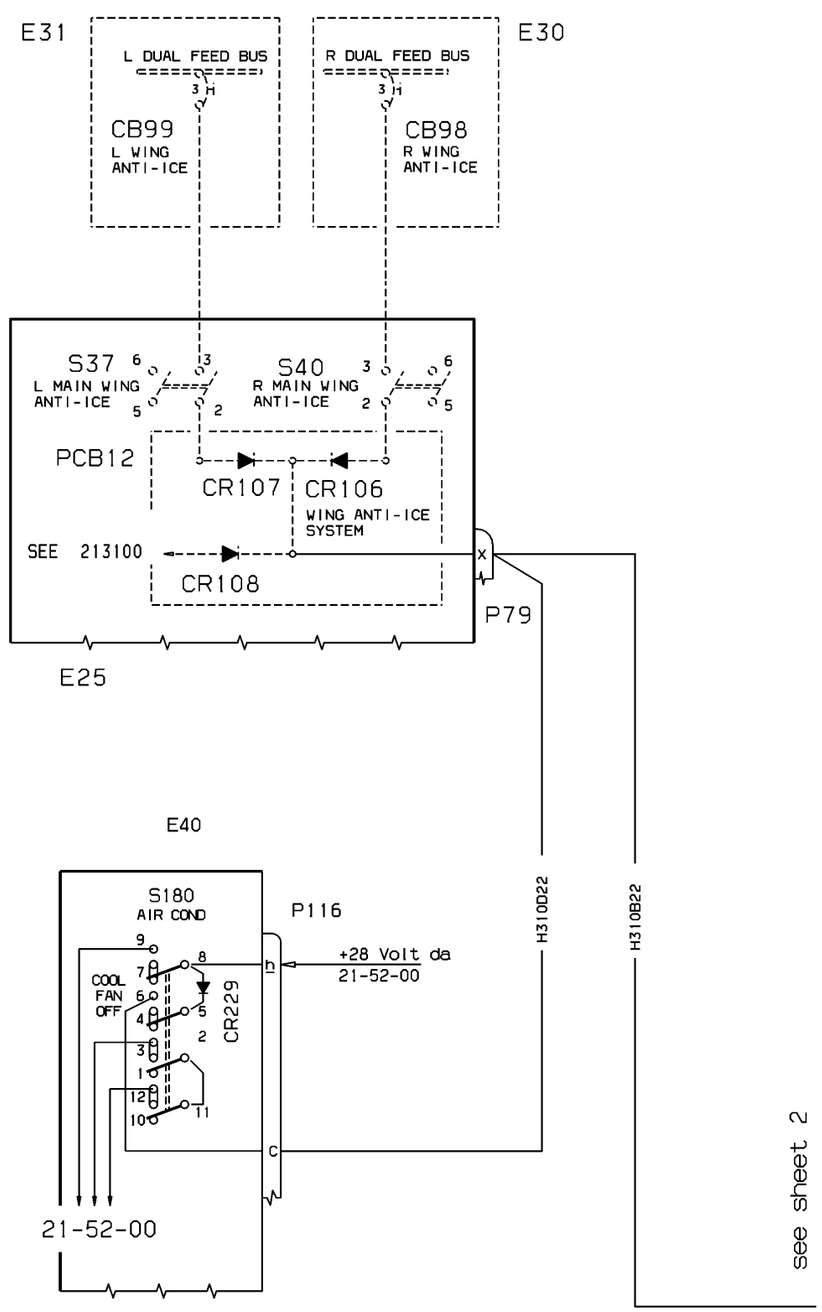


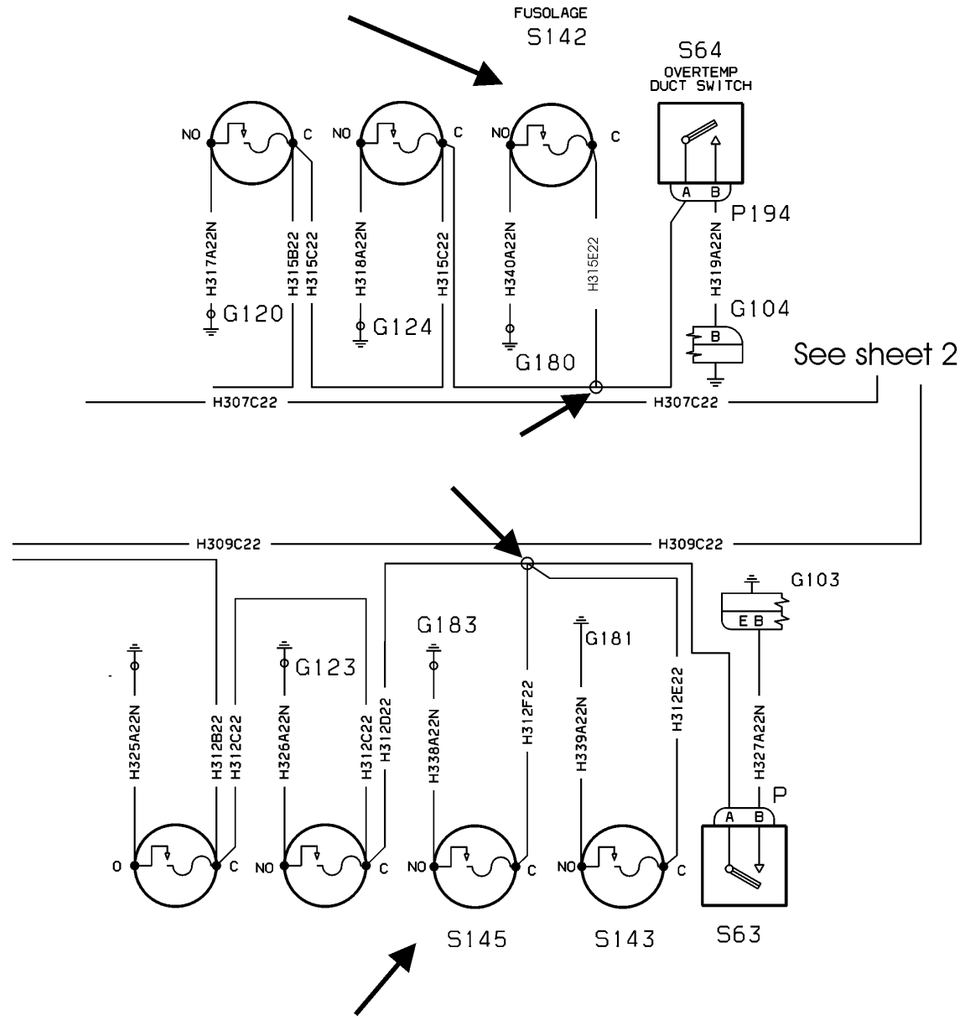


EFFECTIVITY 1004 TO 1087 IF SB 80-0195 ( MANDATORY) EMBODIED

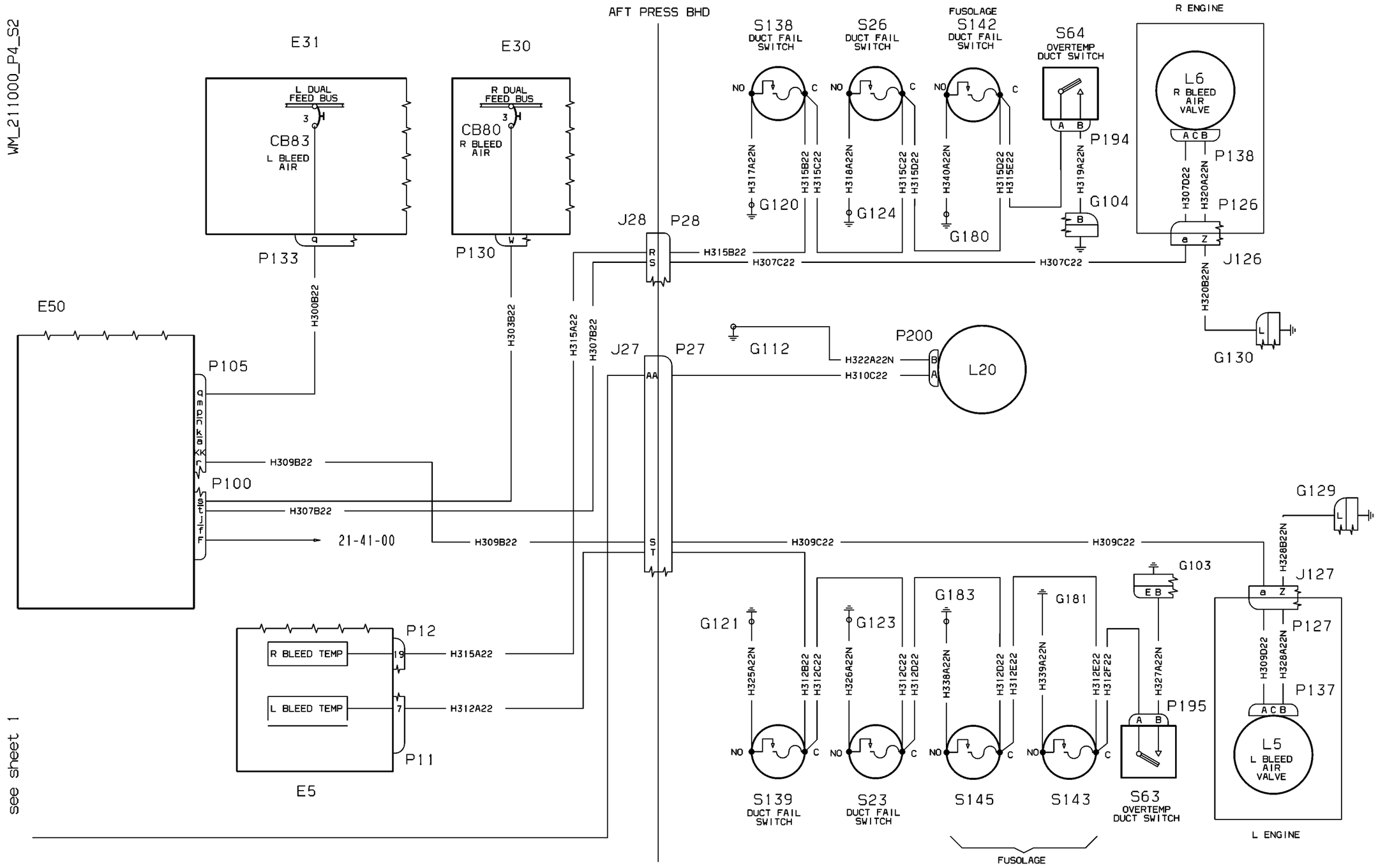
WM_211000_P4_S2
E31
L DUAL FEED BUS
3
CB83
L BLEED AIR
P133
H300B22
E30
R DUAL FEED BUS
3
CB80
R BLEED AIR
P130
H303B22
AFT PRESS BHD
S138
DUCT FAIL SWITCH
S26
DUCT FAIL SWITCH
FUSOLAGE
S142
DUCT FAIL SWITCH
S64
OVERTEMP DUCT SWITCH
R ENGINE
L6
R BLEED AIR VALVE
NO
C
H317A22N
H315B22
H315C22
H318A22N
H315C22
H315D22
H340A22N
H315D22
H315E22
G120
G124
G180
P194
H319A22N
G104
P138
P126
H307D22
H320A22N
J126
H320B22N
G130
J28
P28
R
S
H315B22
H307C22
H307C22
H315A22
H307B22
J27
P27
AA
G112
P200
H322A22N
H310C22
B
A
L20
E50
P105
H309B22
P100
H307B22
21-41-00
H309B22
S
T
H309C22
H309C22
G129
H328B22N
J127
P127
P137
H309D22
H328A22N
G103
G183
G181
P195
H327A22N
A B
A C B
L5
L BLEED AIR VALVE
L ENGINE
G121
G123
H325A22N
H312B22
H312C22
H326A22N
H312C22
H312D22
H338A22N
H312D22
H312E22
H339A22N
H312E22
H312F22
S139
DUCT FAIL SWITCH
S23
DUCT FAIL SWITCH
S145
S143
S63
OVERTEMP DUCT SWITCH
FUSOLAGE
P12
R BLEED TEMP
19
H315A22
L BLEED TEMP
7
H312A22
P11
E5
see sheet 1

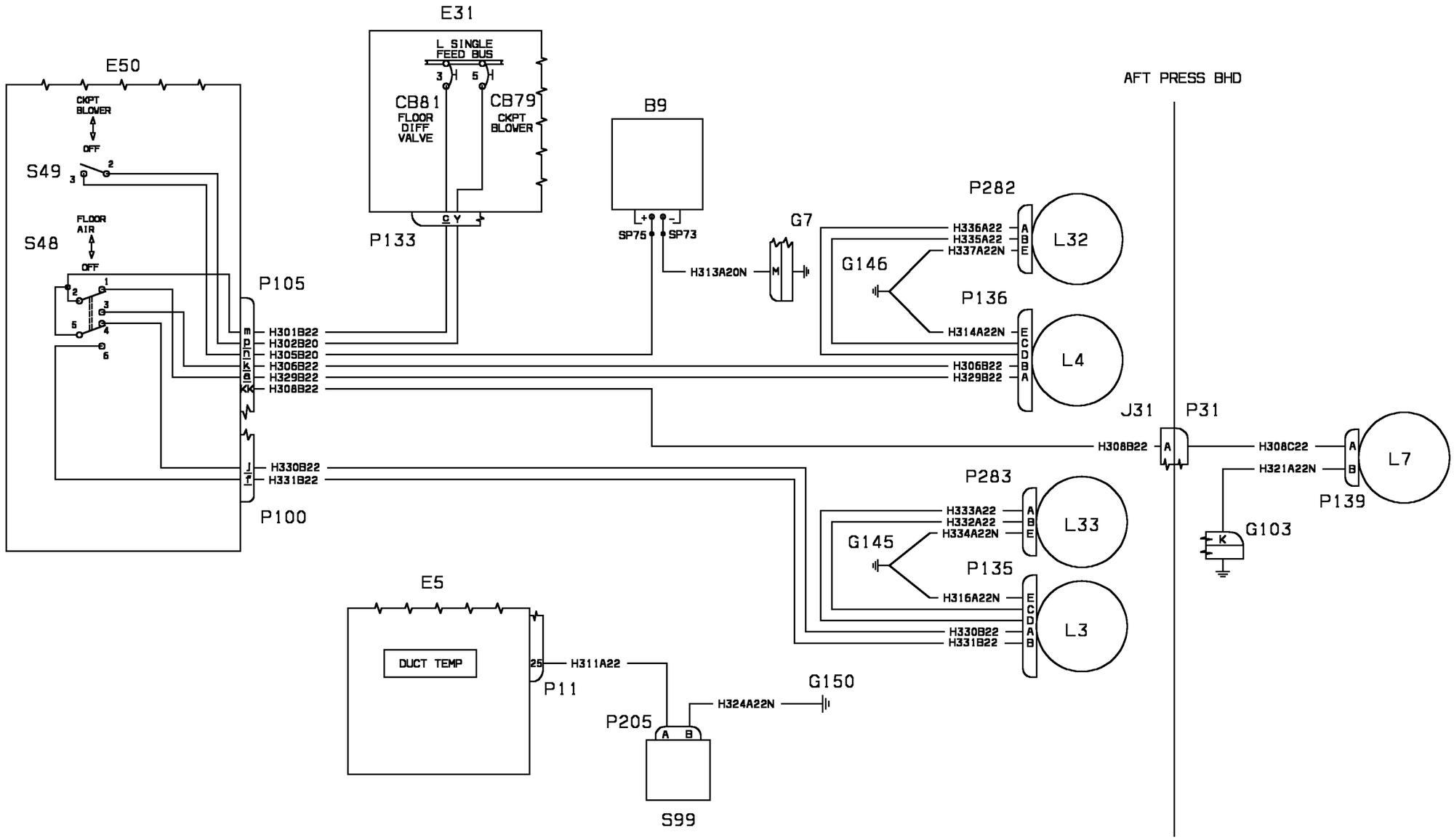


WM_212000AV

| EFFECTIVITY: | DISTRIBUTION |
|---|---|
| 1004-1022 | Distribution System |

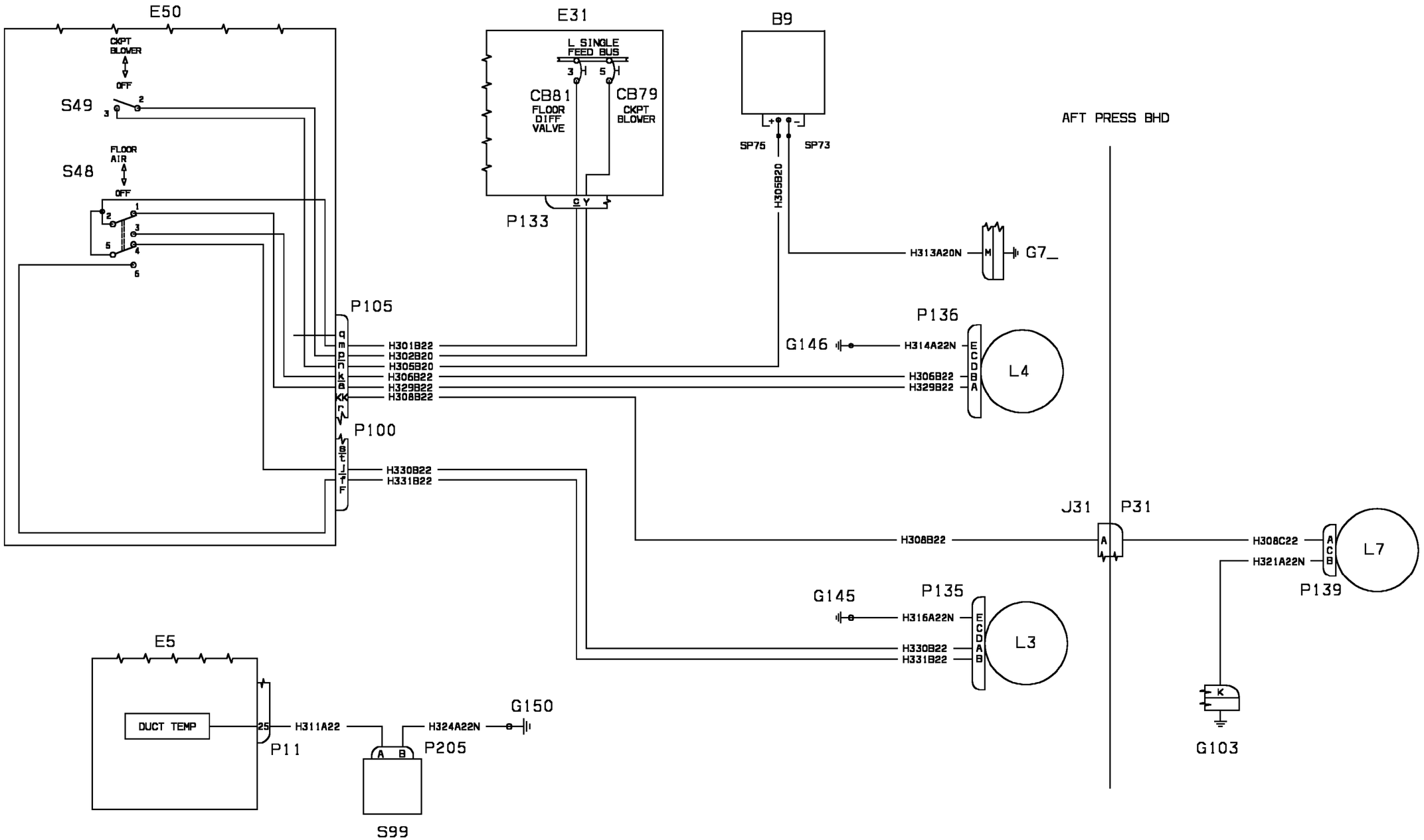
E50
CKPT BLOWER
OFF
S49
FLOOR AIR
S48
OFF
E31
L SINGLE FEED BUS
CB81
FLOOR DIFF VALVE
CB79
CKPT BLOWER
P133
B9
SP75
SP73
H305B20
AFT PRESS BHD
H313A20N
G7_
P105
P136
G146
H314A22N
L4
H301B22
H302B20
H306B20
H306B22
H329B22
H308B22
P100
H330B22
H331B22
J31
P31
H308B22
H308C22
H321A22N
L7
P139
G145
P135
H316A22N
L3
H330B22
H331B22
G103
E5
DUCT TEMP
H311A22
P11
H324A22N
G150
P205
S99
WM_212000AZ

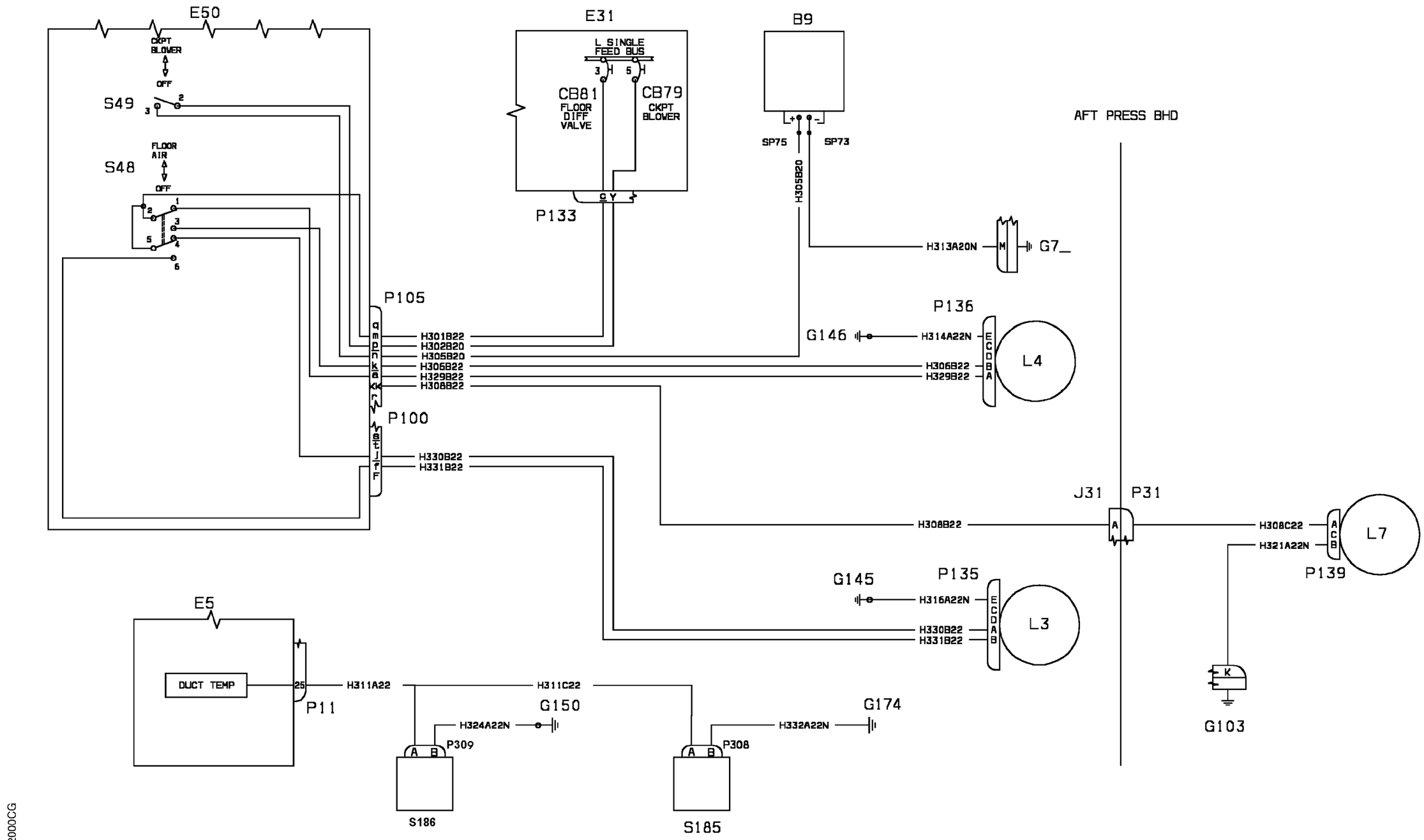
E50
CKPT BLOWER
OFF
S49
FLOOR AIR
S48
OFF
E31
L SINGLE FEED BUS
CB81
FLOOR DIFF VALVE
CB79
CKPT BLOWER
P133
B9
SP75
SP73
H305B20
H313A20N
G7_
AFT PRESS BHD
P105
P136
G146
H314A22N
L4
H301B22
H302B20
H305B20
H306B22
H329B22
H308B22
H306B22
H329B22
P100
H330B22
H331B22
J31
P31
H308B22
H308C22
H321A22N
L7
P139
G145
P135
H316A22N
L3
H330B22
H331B22
G103
E5
DUCT TEMP
25
H311A22
P11
H311C22
G150
H324A22N
P309
S186
G174
H332A22N
P308
S185

WM_212000CG

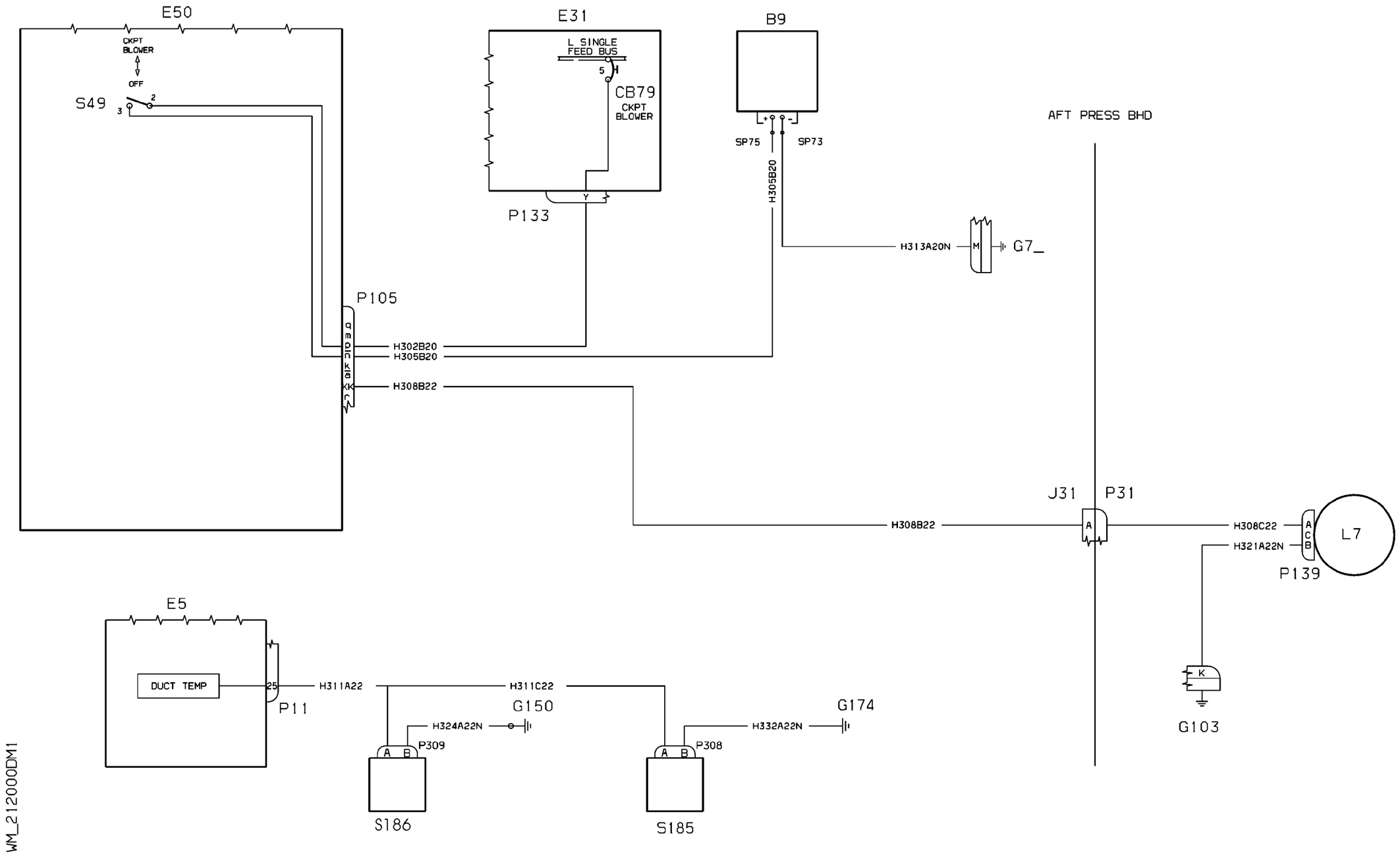
E50
CKPT BLOWER
OFF
S49
2
3
E31
L SINGLE FEED BUS
5
CB79
CKPT BLOWER
Y
P133
B9
SP75
SP73
H305B20
H313A20N
M
G7_
AFT PRESS BHD
P105
H302B20
H305B20
H308B22
J31
P31
A
H308B22
H308C22
H321A22N
A
C
B
L7
P139
K
G103
E5
DUCT TEMP
25
H311A22
P11
H311C22
G150
H324A22N
P309
A B
S186
G174
H332A22N
P308
A B
S185
WM_212000DM1

WM_212200_P1_S1

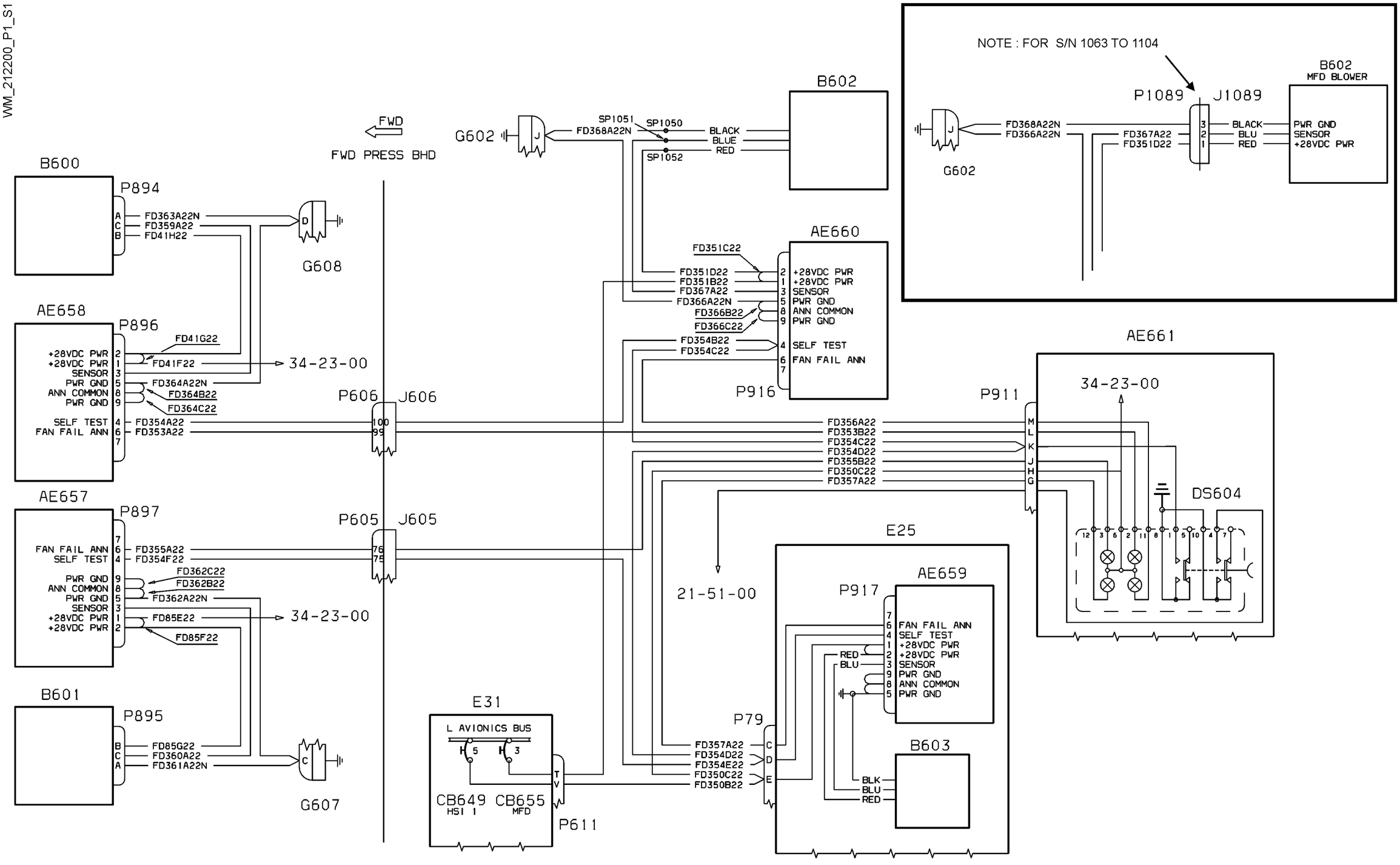


| EFFECTIVITY: | DISTRIBUTION<br>Efis Fans |
|---|---|

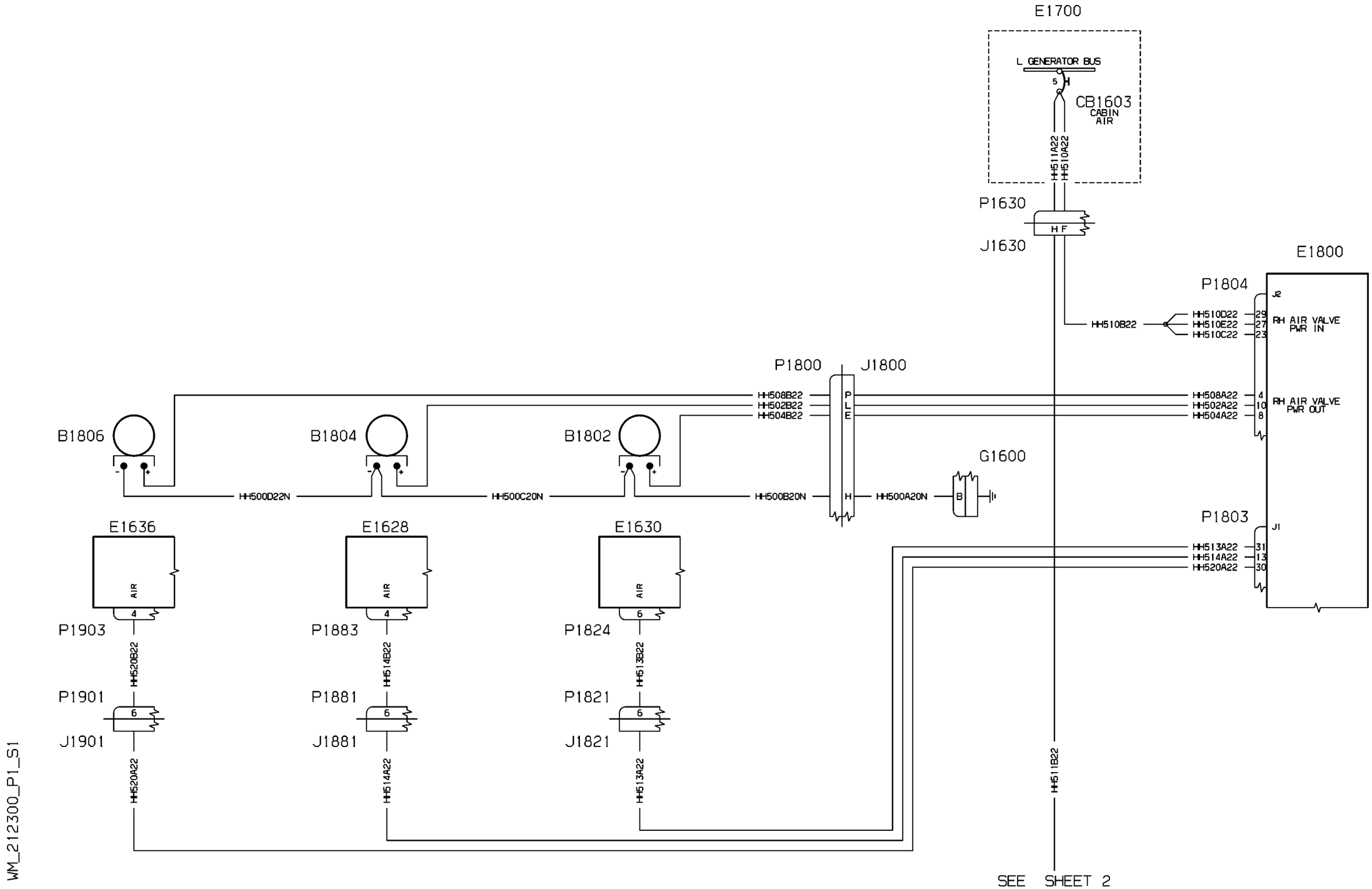


| EFFECTIVITY: | DISTRIBUTION<br>Cabin Air Distribution (Opt. 1 e 2) |
|---|---|

**21-23-00**

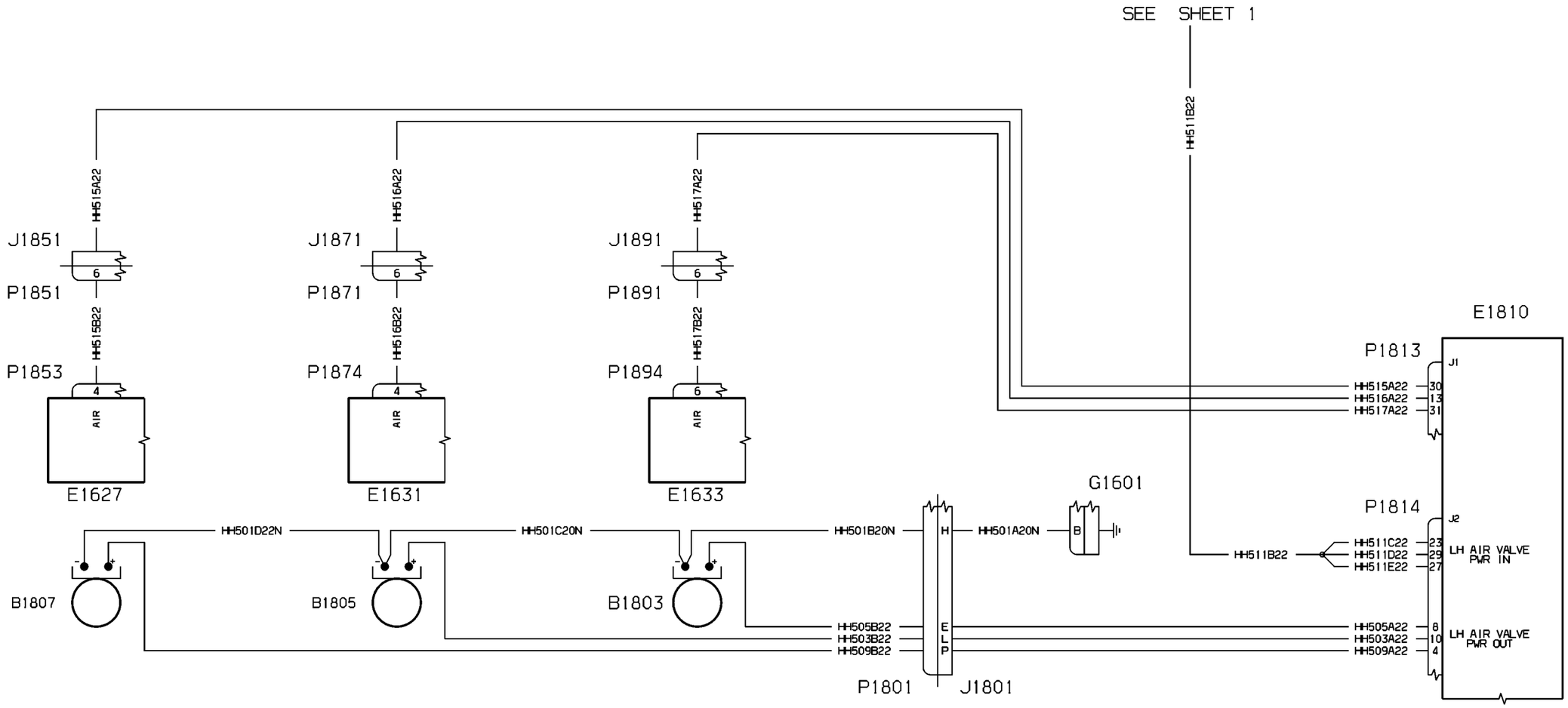


WM_212300_P1_S2

| EFFECTIVITY: | DISTRIBUTION<br>Cabin Air Distribution (Opt. 1 e 2) |
|---|---|

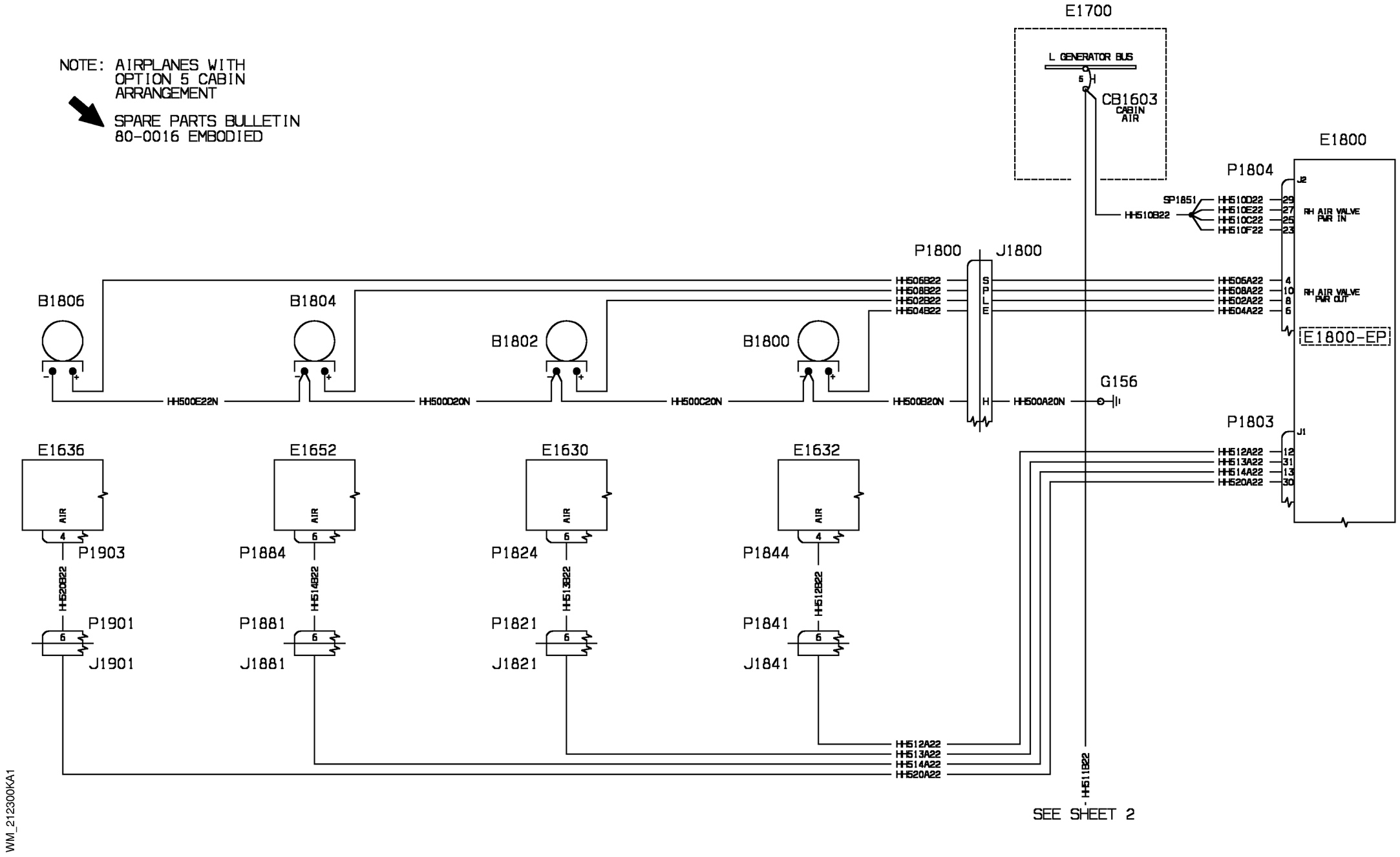


| EFFECTIVITY: | DISTRIBUTION<br>Cabin Air Distribution (Opt. 5) |
|---|---|

**21-23-00**

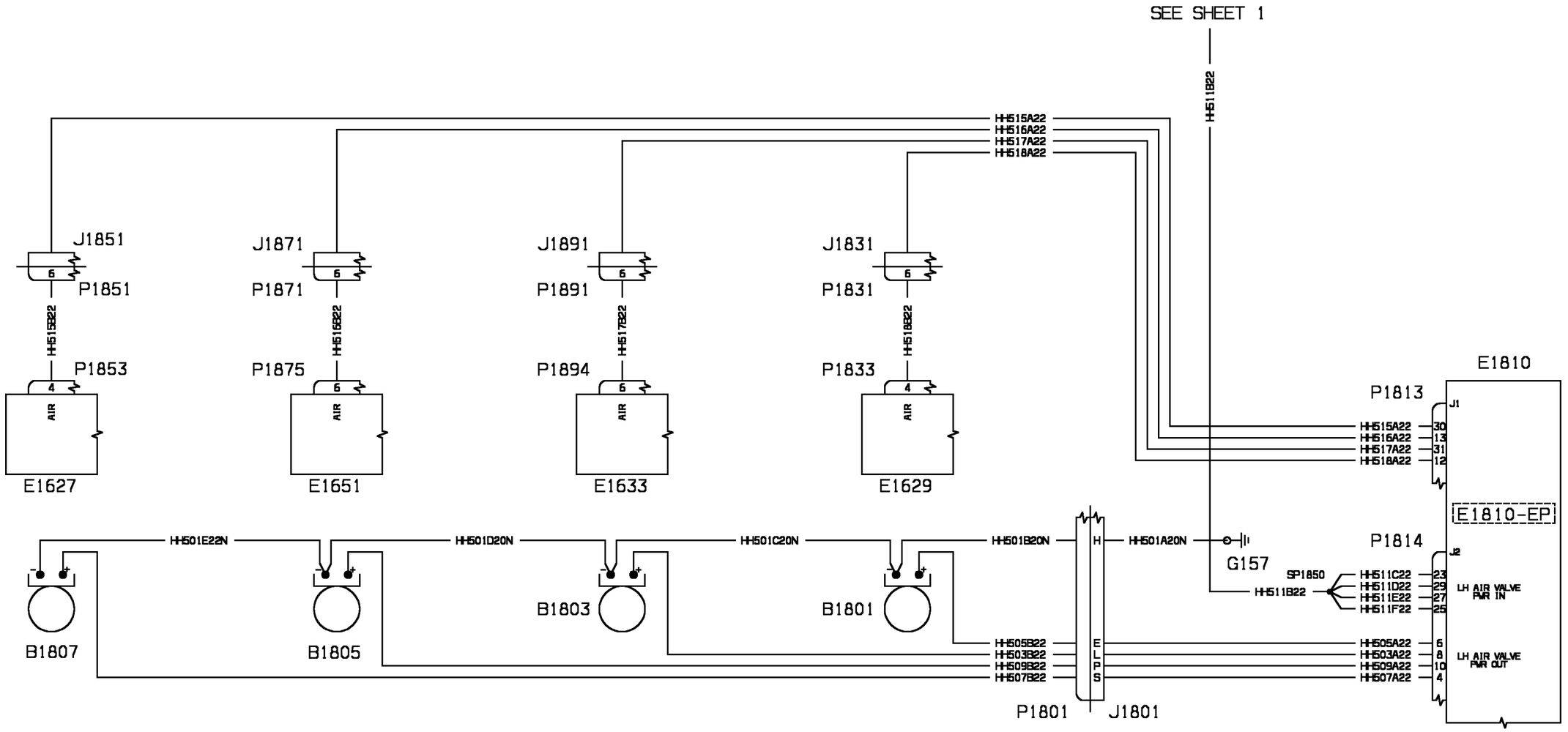


NOTE: AIRPLANES WITH OPTION 5 CABIN ARRANGEMENT

SPARE PARTS BULLETIN 80-0016 EMBODIED

WM_212300KA2

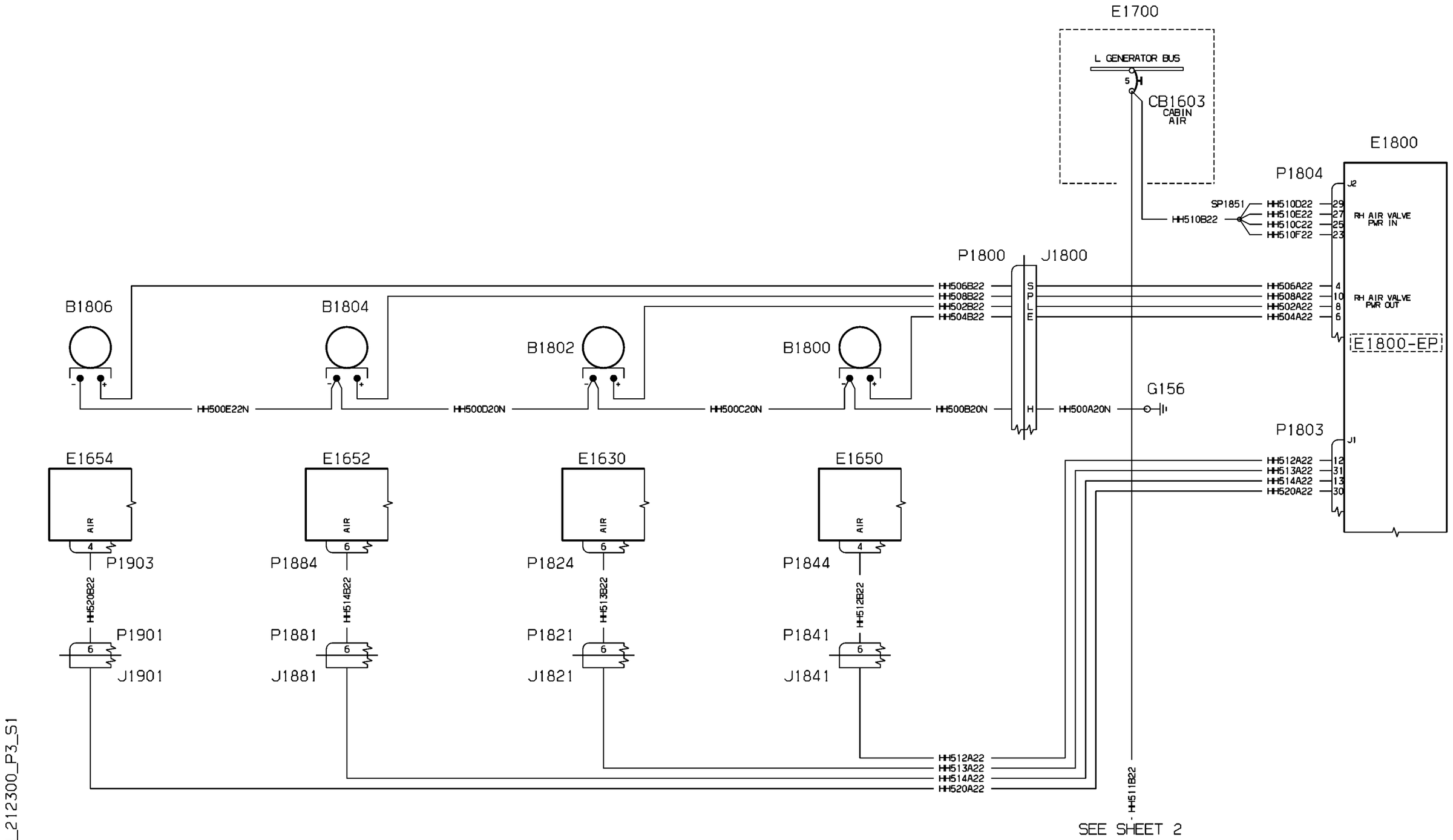


WM_212300_P3_S1

| EFFECTIVITY: | DISTRIBUTION<br>Cabin Air Distribution (Opt. 8) |
|---|---|

**21-23-00**

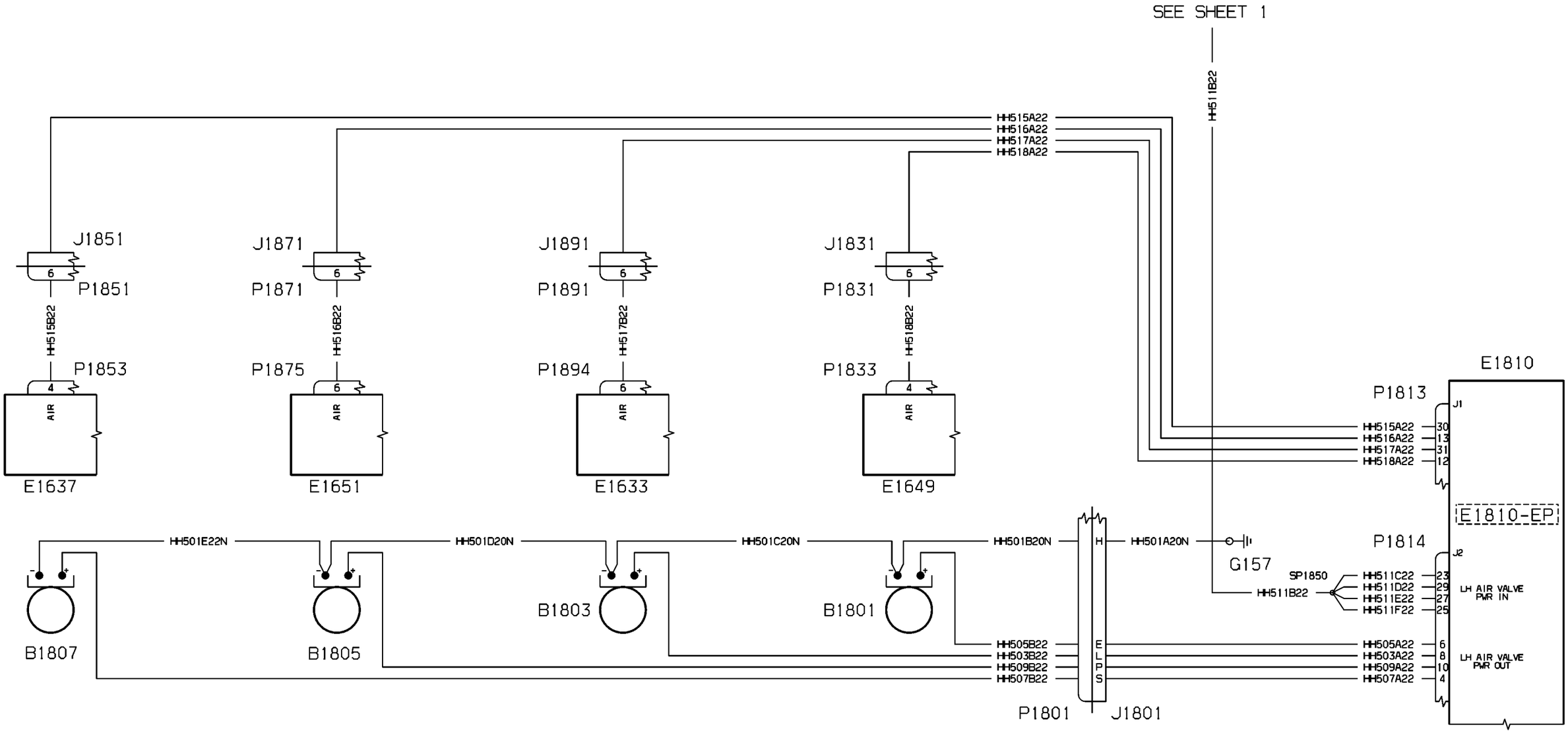


WM_212300_P3_S2

| EFFECTIVITY: | DISTRIBUTION<br>Cabin Air Distribution (Opt. 8) |
|---|---|

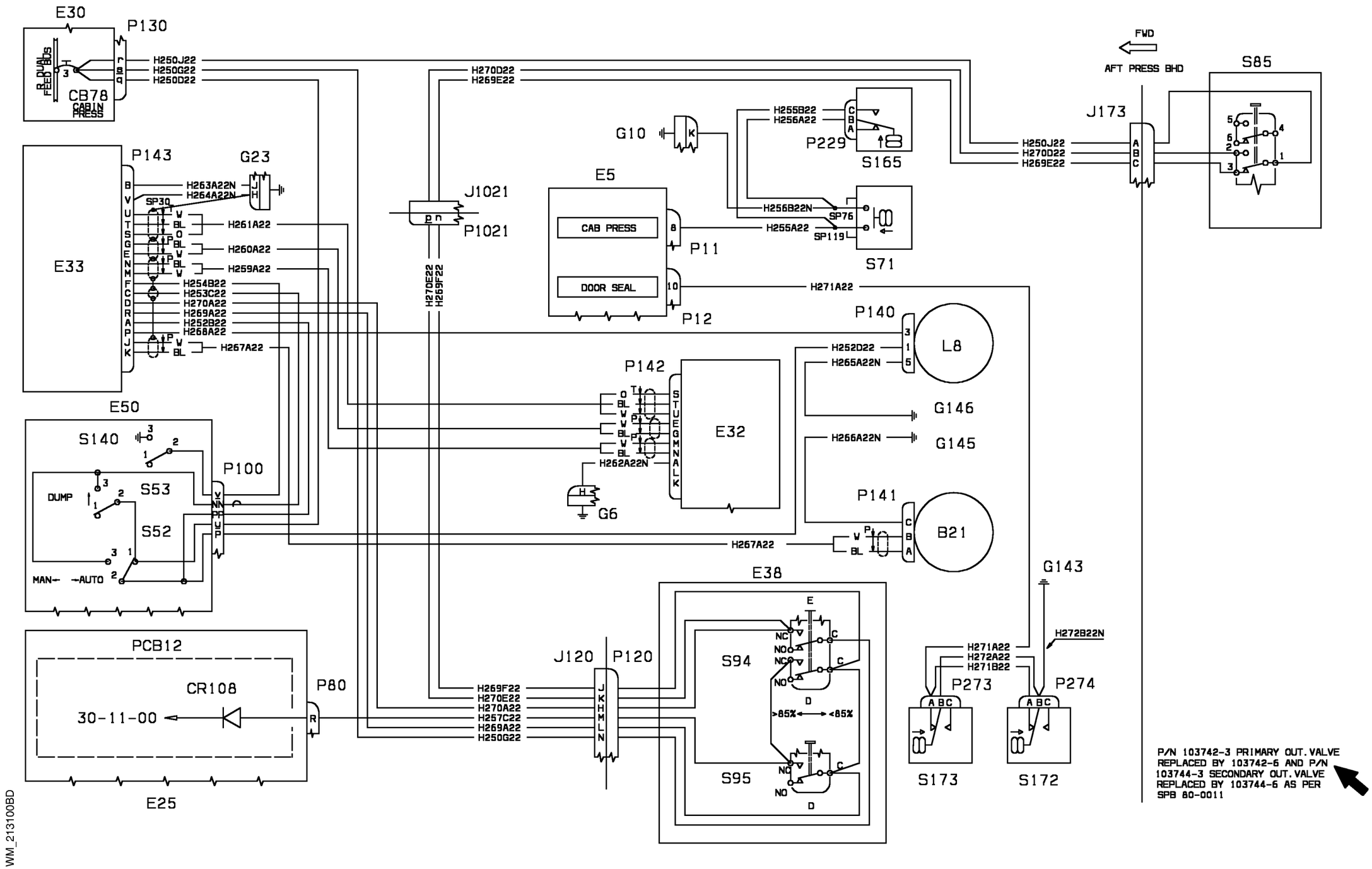
E30
P130
R DUAL FEED BUS
CB78
CABIN PRESS
H250J22
H250G22
H250D22
H270D22
H269E22
FWD
AFT PRESS BHD
S85
J173
H250J22
H270D22
H269E22
G10
H255B22
H256A22
P229
S165
H256B22N
SP76
SP119
H255A22
S71
P143
G23
E33
H263A22N
H264A22N
SP30
H261A22
H260A22
H259A22
H254B22
H253C22
H270A22
H269A22
H252B22
H268A22
H267A22
J1021
P1021
H270E22
H269F22
E5
CAB PRESS
DOOR SEAL
P11
P12
H271A22
P140
L8
H252D22
H265A22N
G146
H266A22N
G145
P142
E32
H262A22N
G6
P141
B21
H267A22
E50
S140
P100
S53
DUMP
S52
MAN
AUTO
E38
G143
H272B22N
H271A22
H272A22
H271B22
P273
P274
S173
S172
PCB12
CR108
30-11-00
P80
E25
J120
P120
H269F22
H270E22
H270A22
H257C22
H269A22
H250G22
S94
S95
>85%
<85%
P/N 103742-3 PRIMARY OUT. VALVE REPLACED BY 103742-6 AND P/N 103744-3 SECONDARY OUT. VALVE REPLACED BY 103744-6 AS PER SPB 80-0011
WM_213100BD

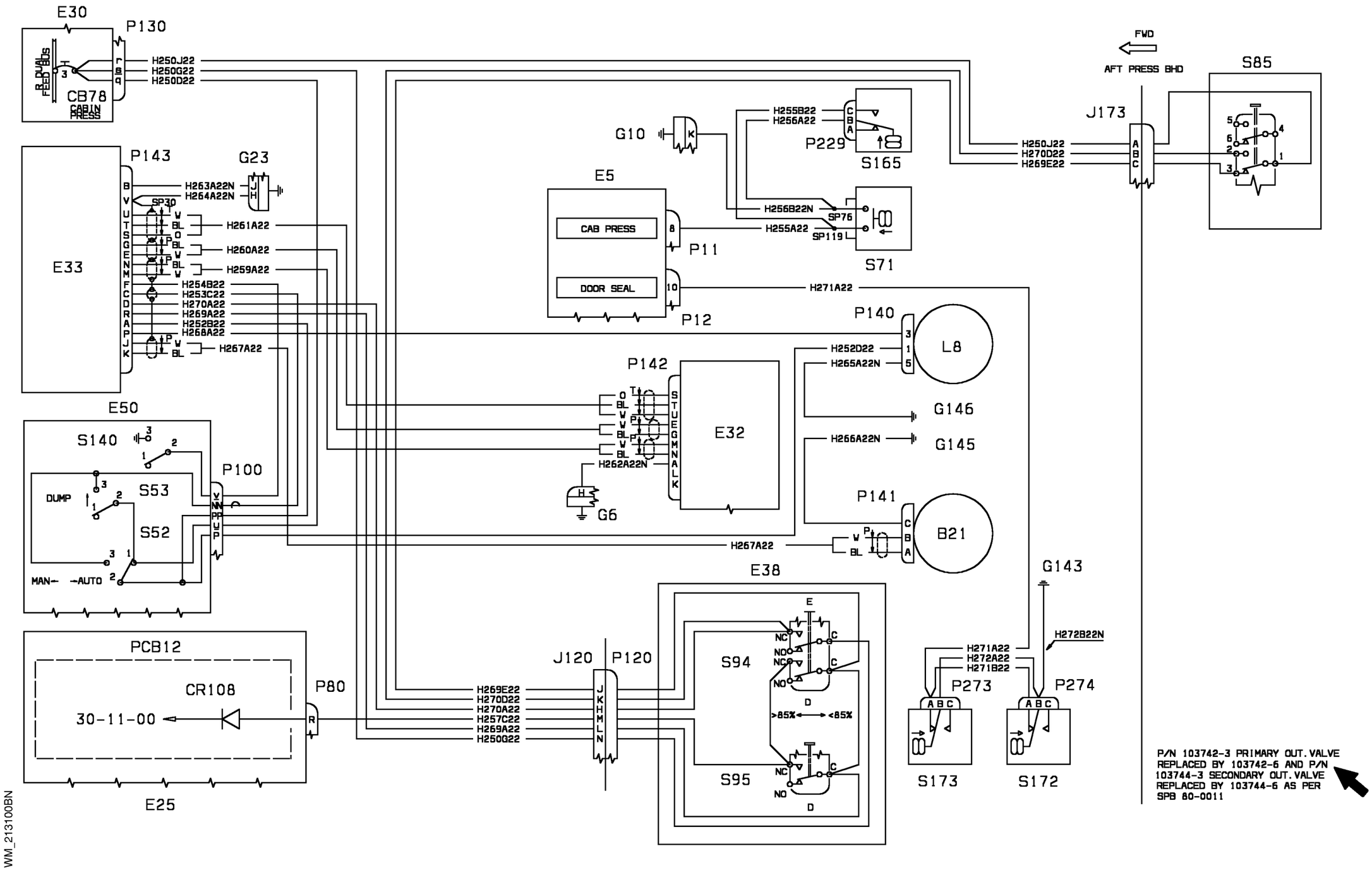
E30
P130
CB78
CABIN PRESS
H250J22
H250G22
H250D22
FWD
AFT PRESS BHD
S85
J173
H250J22
H270D22
H269E22
G10
H255B22
H256A22
P229
S165
H256B22N
SP76
H255A22
SP119
S71
E5
CAB PRESS
DOOR SEAL
P11
P12
H271A22
P143
G23
H263A22N
H264A22
SP30
H261A22
H260A22
H259A22
H254B22
H253C22
H270A22
H269A22
H252B22
H268A22
H267A22
E33
P140
L8
H252D22
H265A22N
G146
H266A22N
G145
P142
E32
H262A22N
G6
P141
B21
H267A22
E50
S140
P100
S53
DUMP
S52
MAN
AUTO
E38
G143
H272B22N
H271A22
H272A22
H271B22
P273
P274
S173
S172
PCB12
CR108
30-11-00
P80
E25
J120
P120
H269E22
H270D22
H270A22
H257C22
H269A22
H250G22
S94
S95
>85%
<85%
P/N 103742-3 PRIMARY OUT. VALVE REPLACED BY 103742-6 AND P/N 103744-3 SECONDARY OUT. VALVE REPLACED BY 103744-6 AS PER SPB 80-0011
WM_213100BN

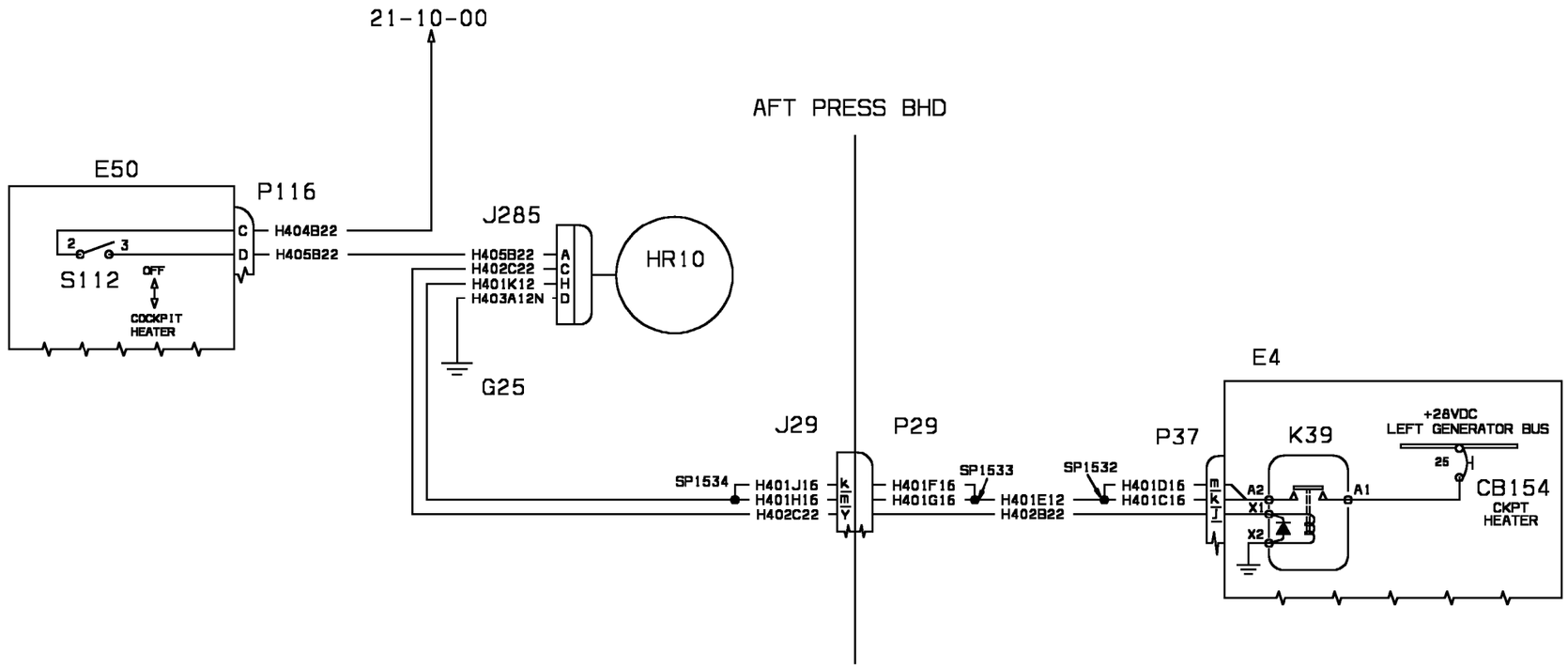
21-10-00
AFT PRESS BHD
E50
P116
J285
HR10
S112
OFF
COCKPIT
HEATER
H404B22
H405B22
H405B22
H402C22
H401K12
H403A12N
G25
J29
P29
P37
K39
E4
+28VDC
LEFT GENERATOR BUS
CB154
CKPT
HEATER
SP1534
SP1533
SP1532
H401J16
H401H16
H402C22
H401F16
H401G16
H401E12
H402B22
H401D16
H401C16
A2
A1
X1
X2

WM_214000CF

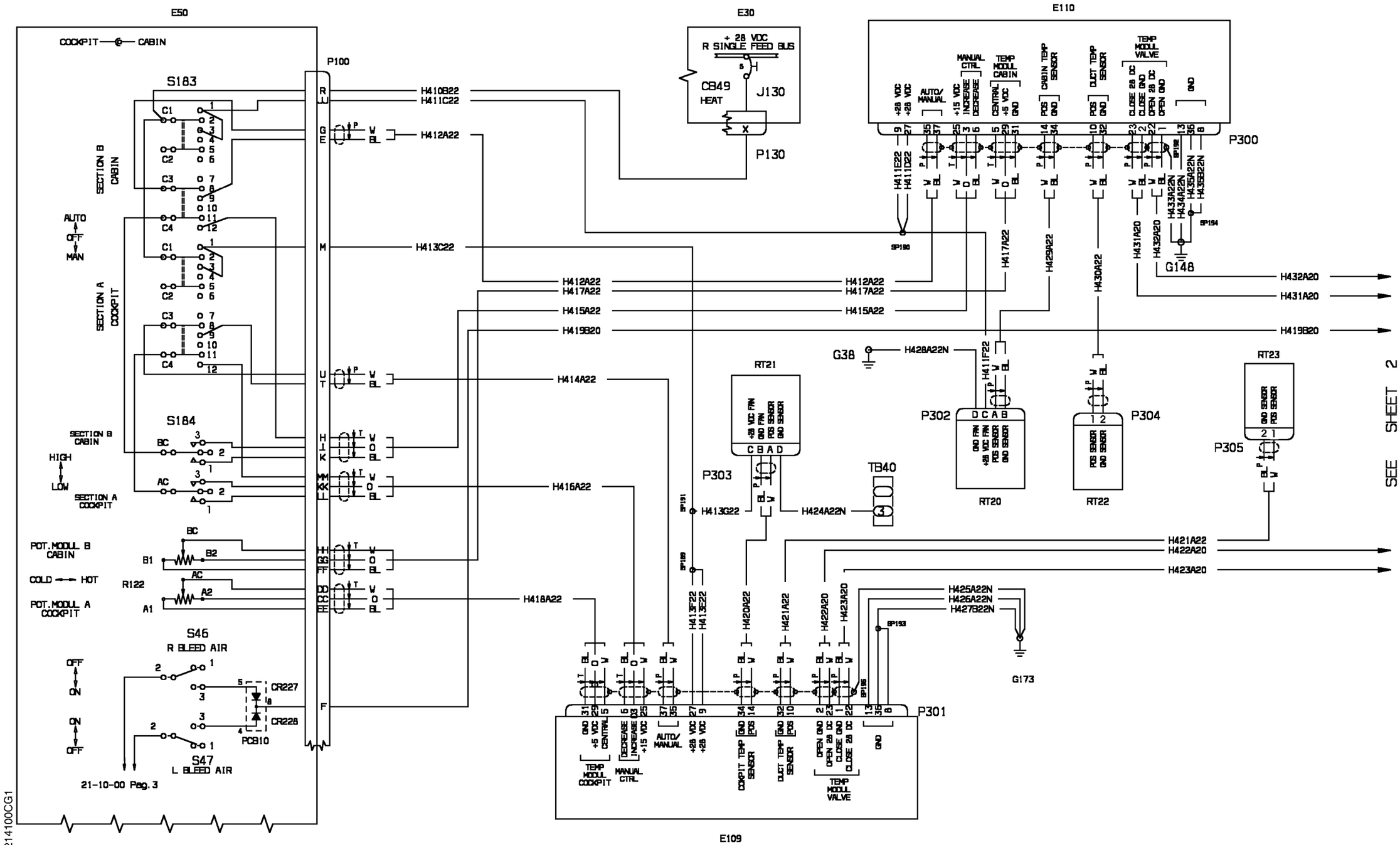


WM_214100CG1

| EFFECTIVITY: | HEADING |
|---|---|
| 1041-1042,1044,<br>1046-1049,1052-1053,<br>1055-1056,1058-1104 | HEATING<br>Flight Compartment |

**21-41-00**

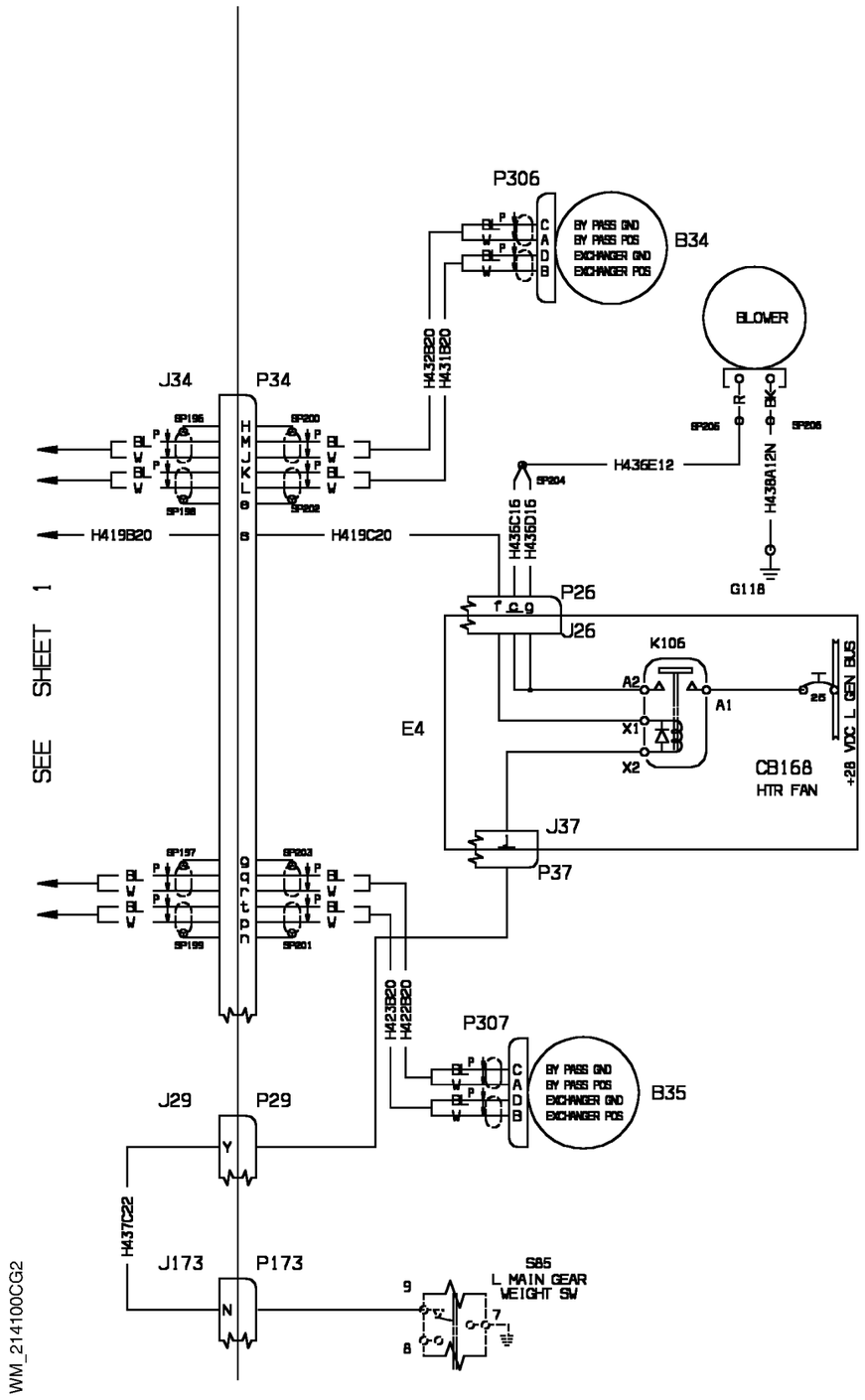


| EFFECTIVITY: | HEATING |
|---|---|
| 1041-1042,1044,<br>1046-1049,1052-1053,<br>1055-1056,1058-1104 | Flight Compartment |

**21-41-00**

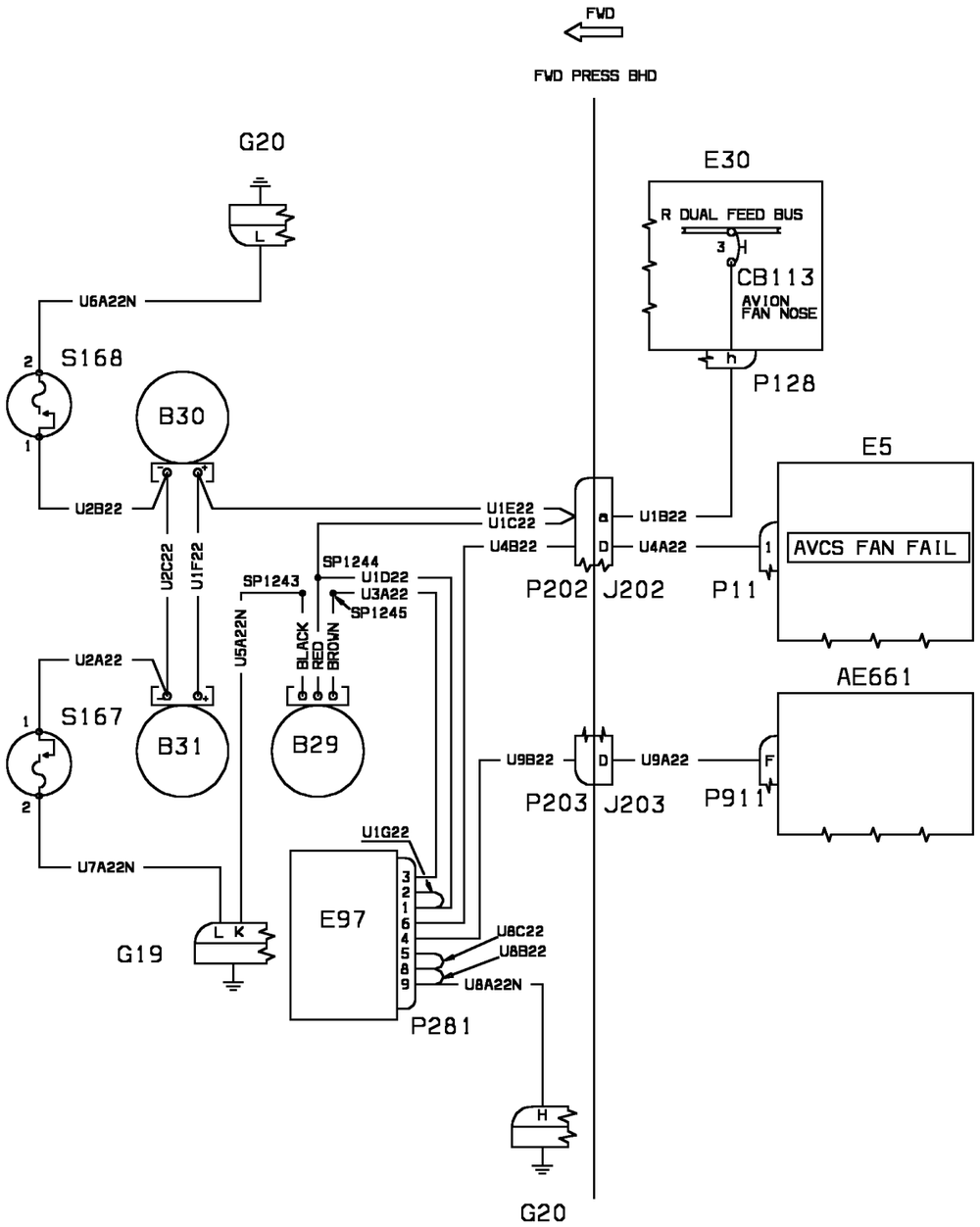


WM_215100AT

NOTE: AIRPLANES NOT EMBODYING S.B. 80-0032

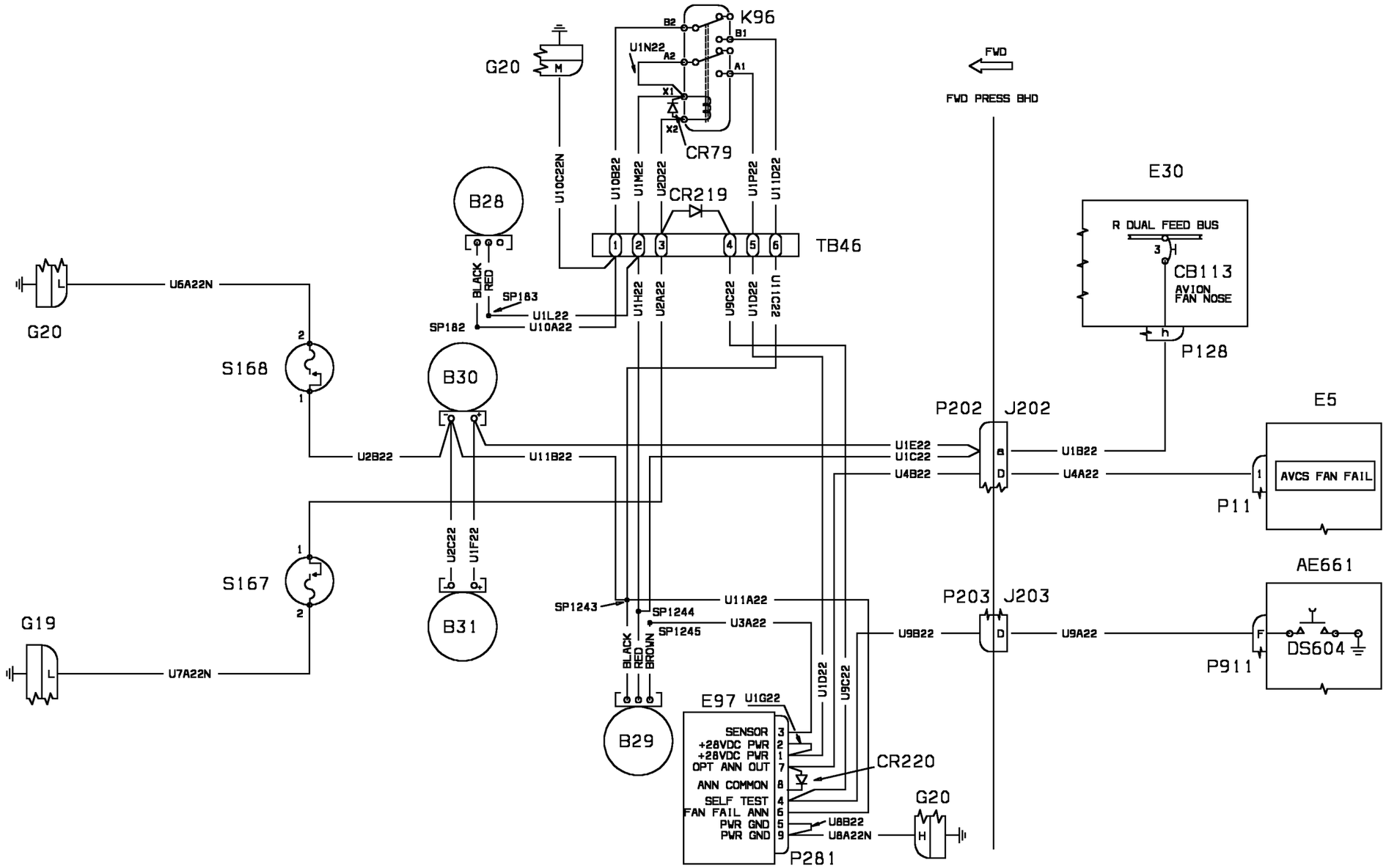


WM_215100AU

NOTE: APPLICABLE ALSO TO AIRPLANES S.N.
1004 THRU 1025 EMBODYING S.B. 80-0032

WM_215100_P3_S1

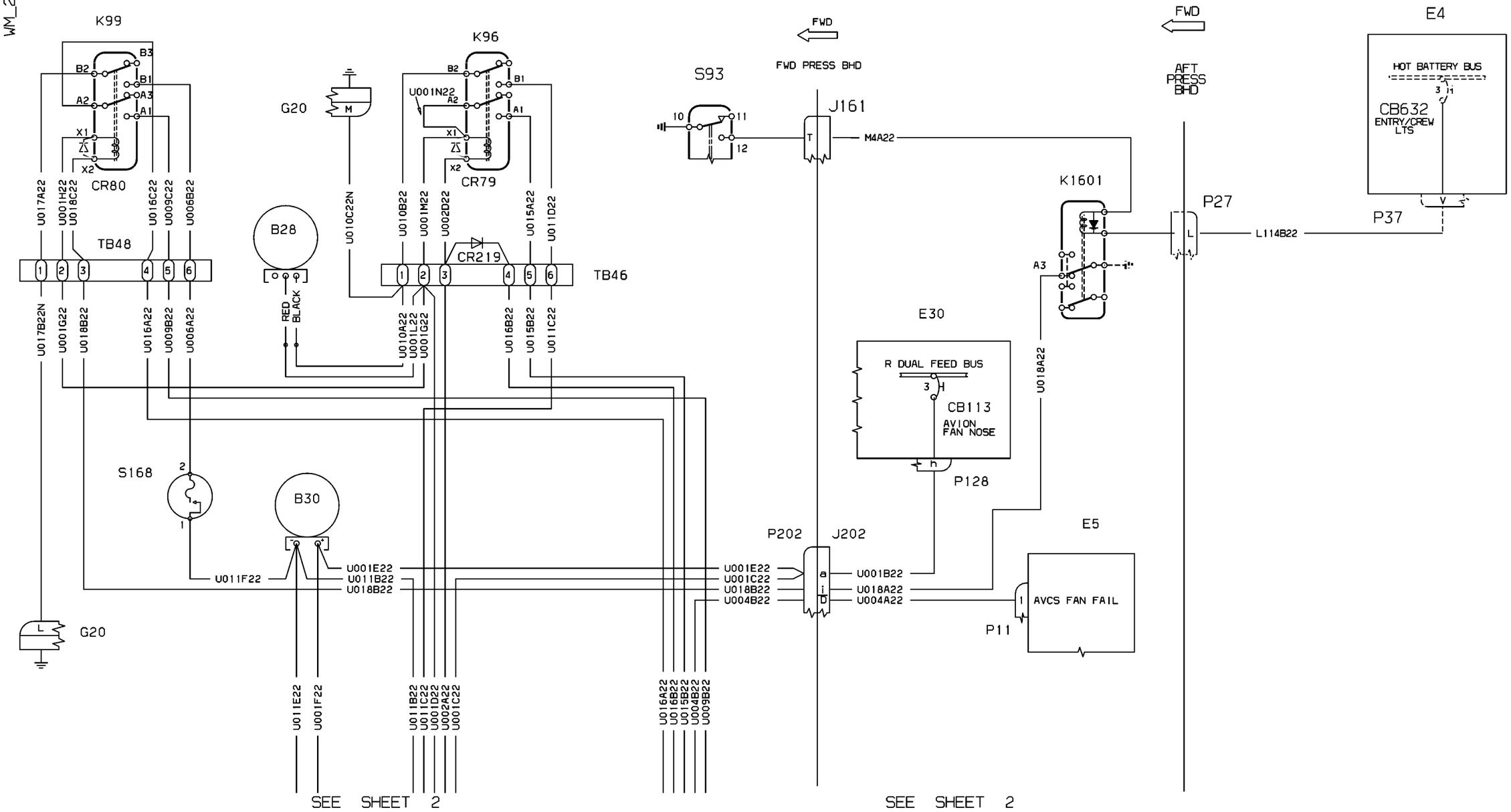

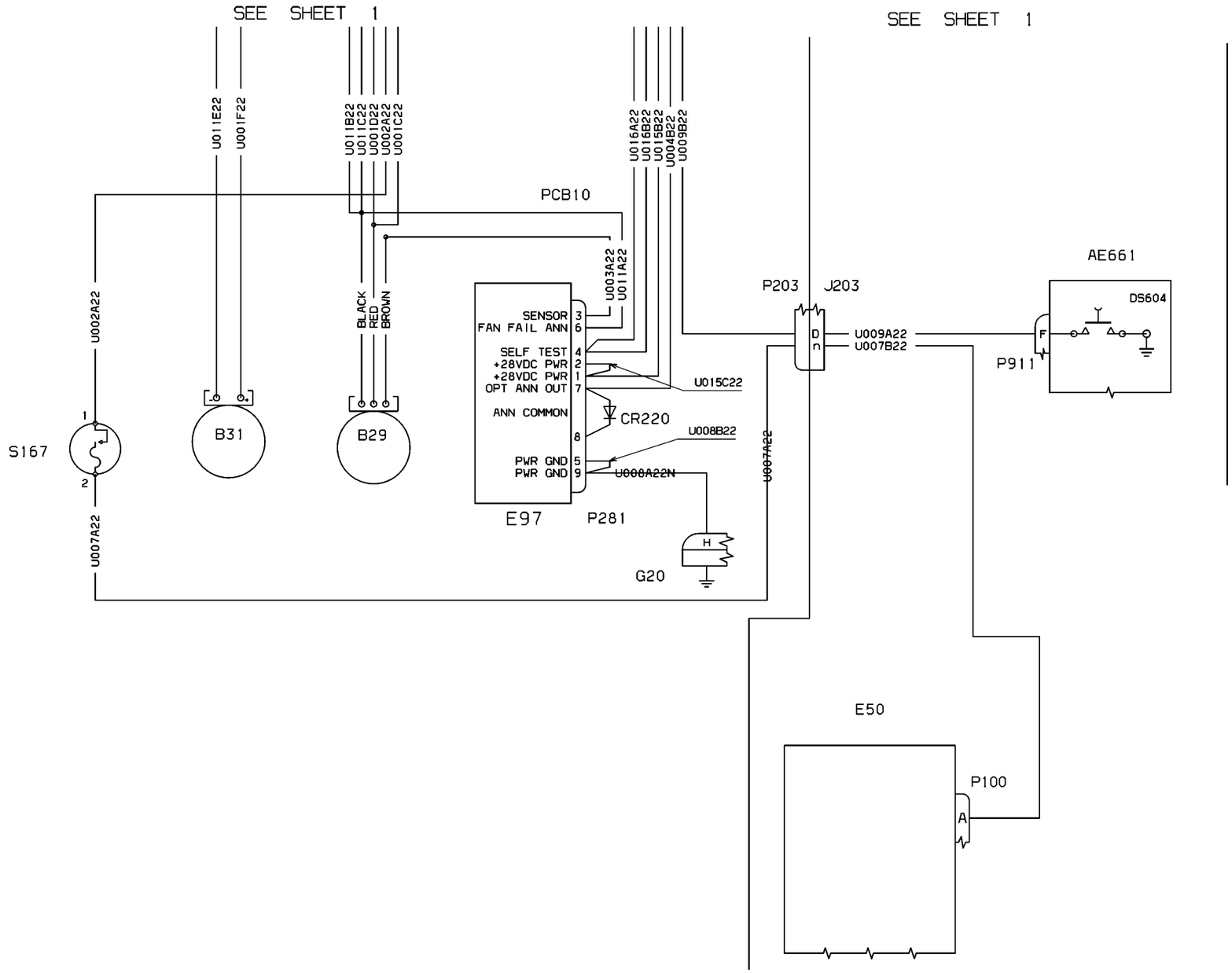
SEE SHEET 1
SEE SHEET 1
U011E22
U001F22
U011B22
U011C22
U001D22
U002A22
U001C22
U016A22
U016B22
U015B22
U004B22
U009B22
PCB10
U003A22
U011A22
U002A22
BLACK
RED
BROWN
S167
B31
B29
SENSOR 3
FAN FAIL ANN 6
SELF TEST 4
+28VDC PWR 2
+28VDC PWR 1
OPT ANN OUT 7
ANN COMMON 8
PWR GND 5
PWR GND 9
U015C22
CR220
U008B22
U008A22N
U007A22
E97
P281
G20
P203
J203
U009A22
U007B22
AE661
DS604
P911
E50
P100
A
WM_215100_P3_S2

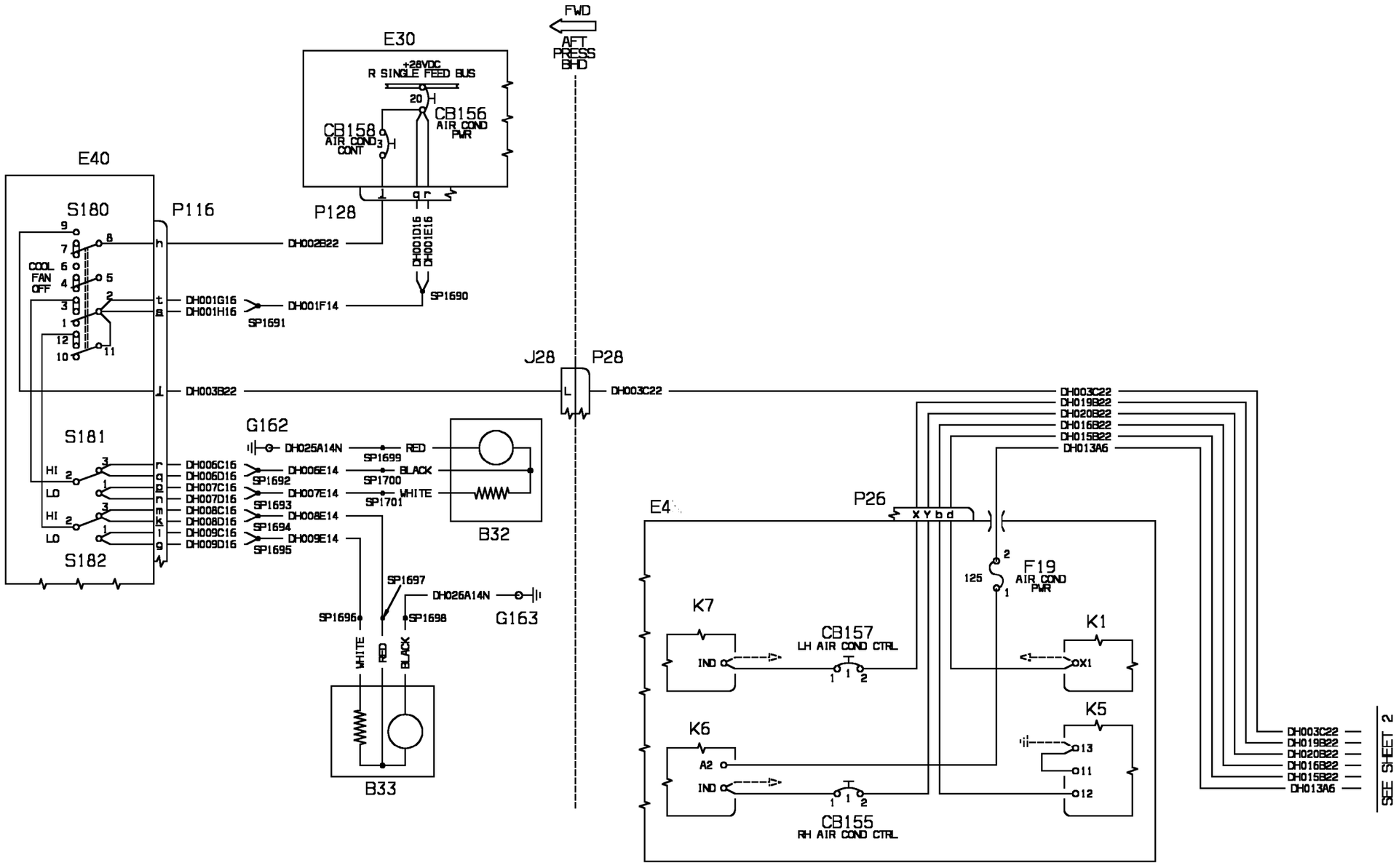


WM_215200KKA1

| EFFECTIVITY: | COOLING |
|---|---|
| 1004-1040,1043,1045, 1050-1051,1054,1057 | Freon Air Conditioner System KEITH (Opt.) |

**21-52-00**

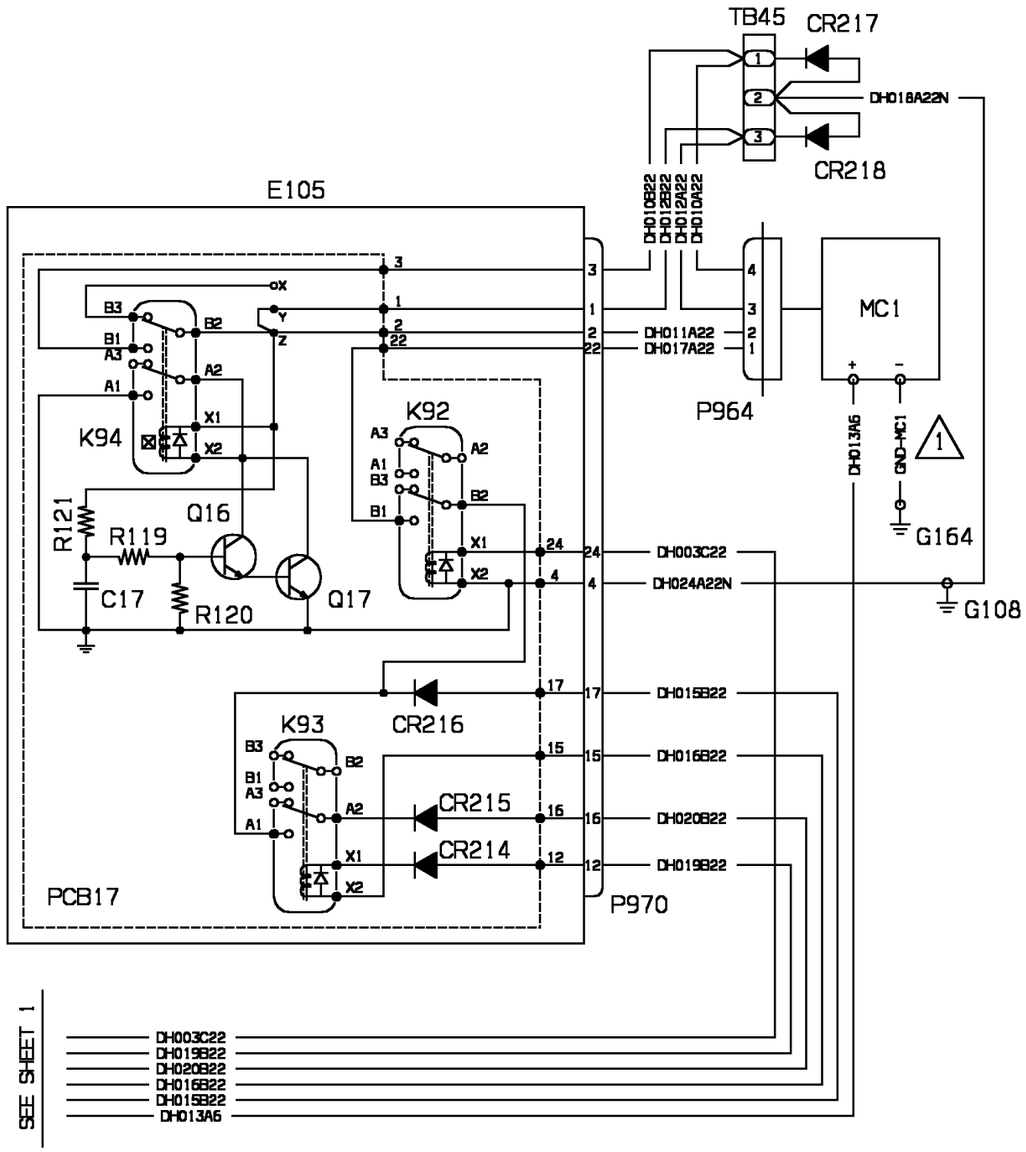


1 WIRE IS PART OF COMPRESSOR UNIT.

WM_215200KKA2

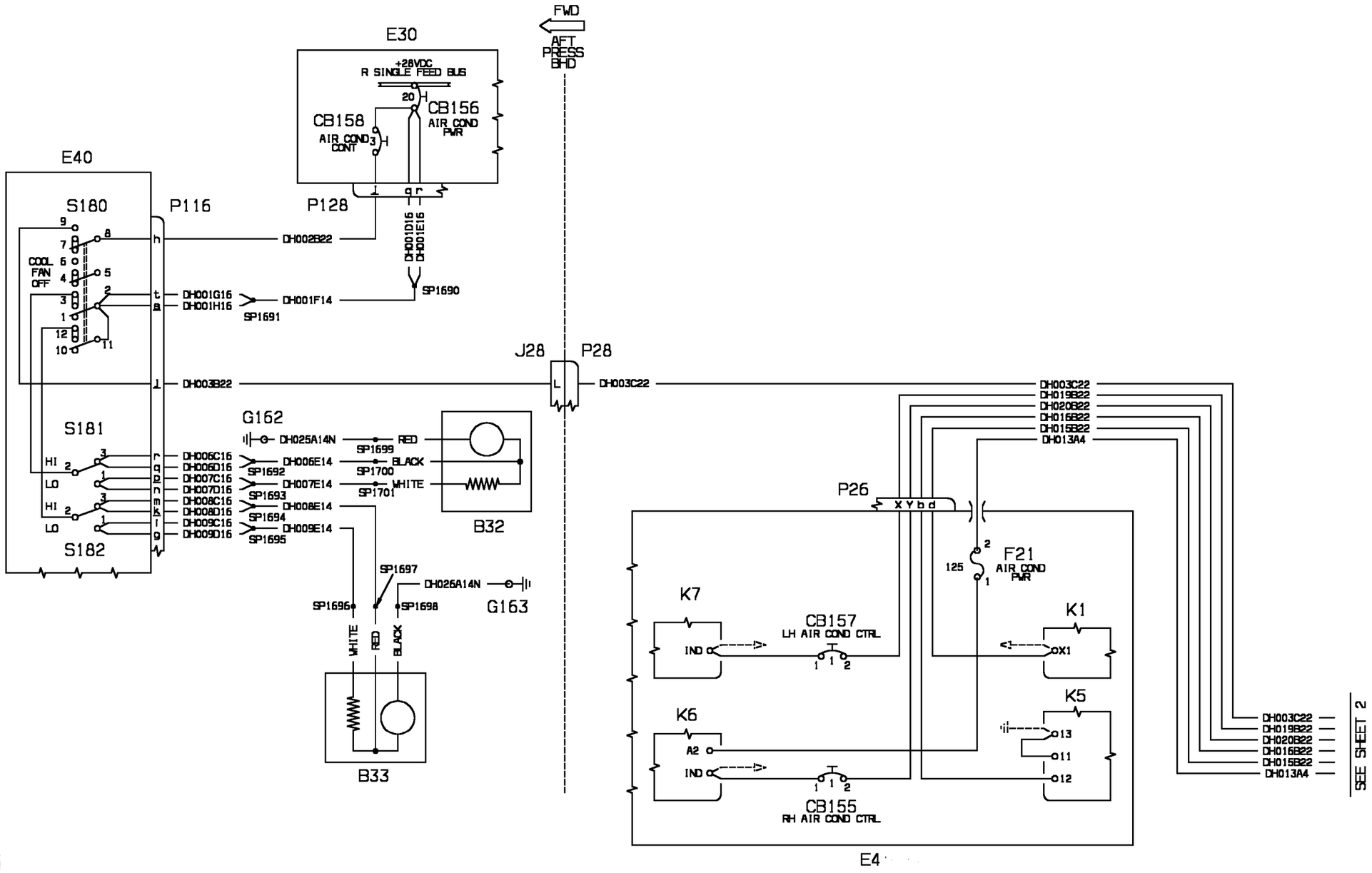


WM_215200KKB1

| EFFECTIVITY: | COOLING |
|---|---|
| 1004-1040,1043,1045, 1050-1051,1054,1057 | Freon Air Conditioner System KEITH (Opt.) With Protection |

**21-52-00**

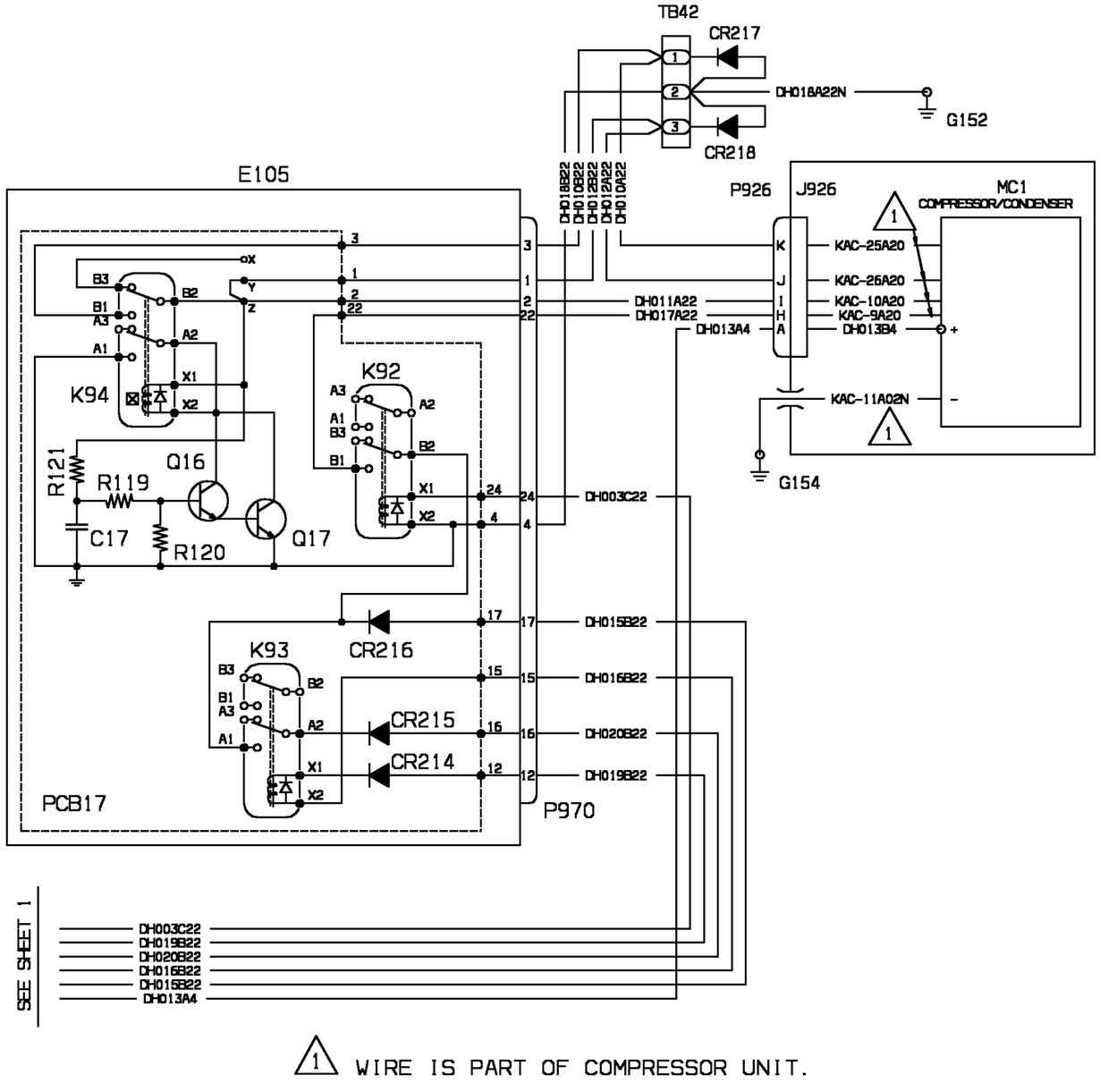


WM_215200KKB2

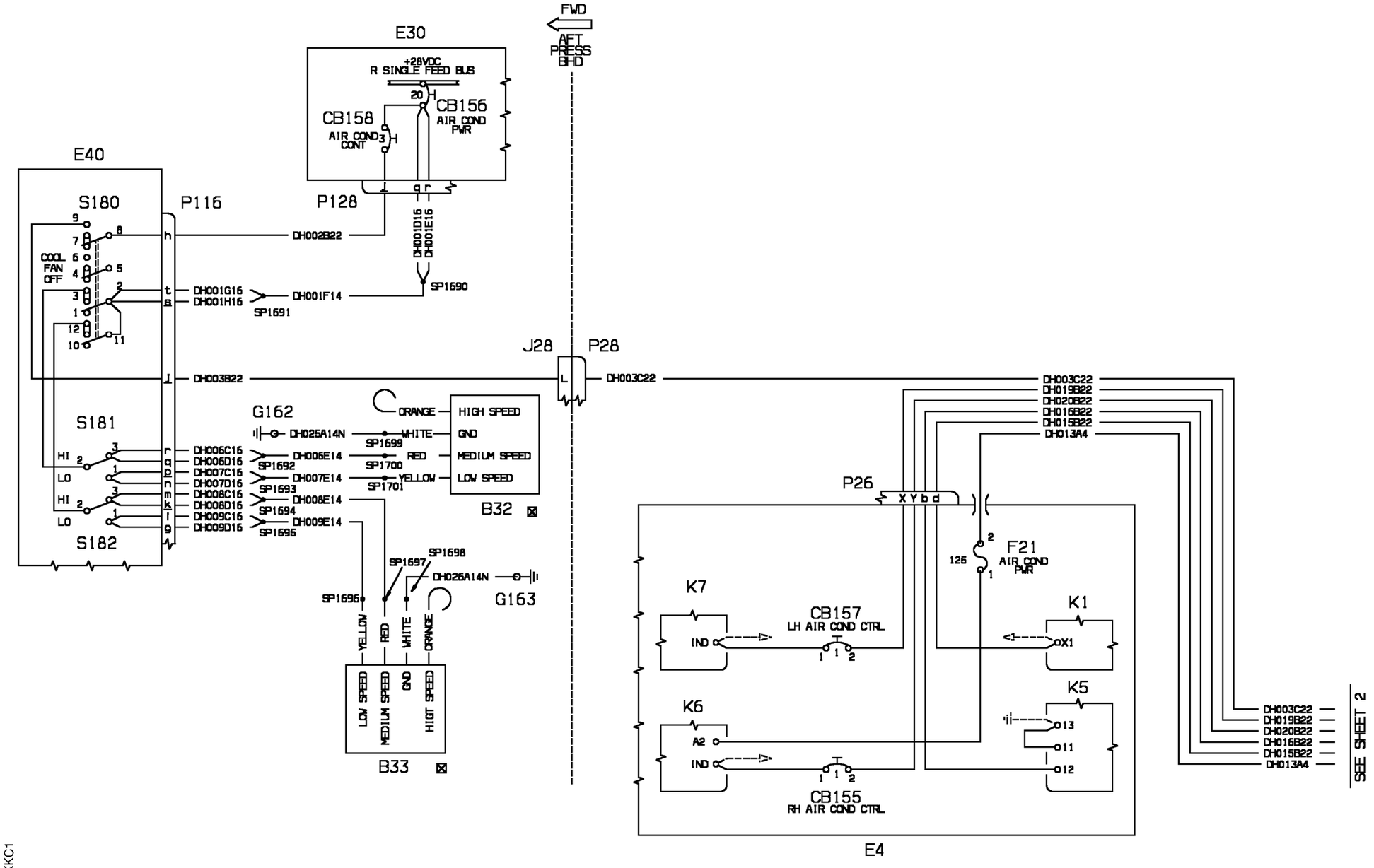


WM_215200KKC1

| EFFECTIVITY: | COOLING |
|---|---|
| 1032,1034-1036,1037, 1039,1040,1045 | Freon Air Conditioner System Progres s.r.l. |

**21-52-00**

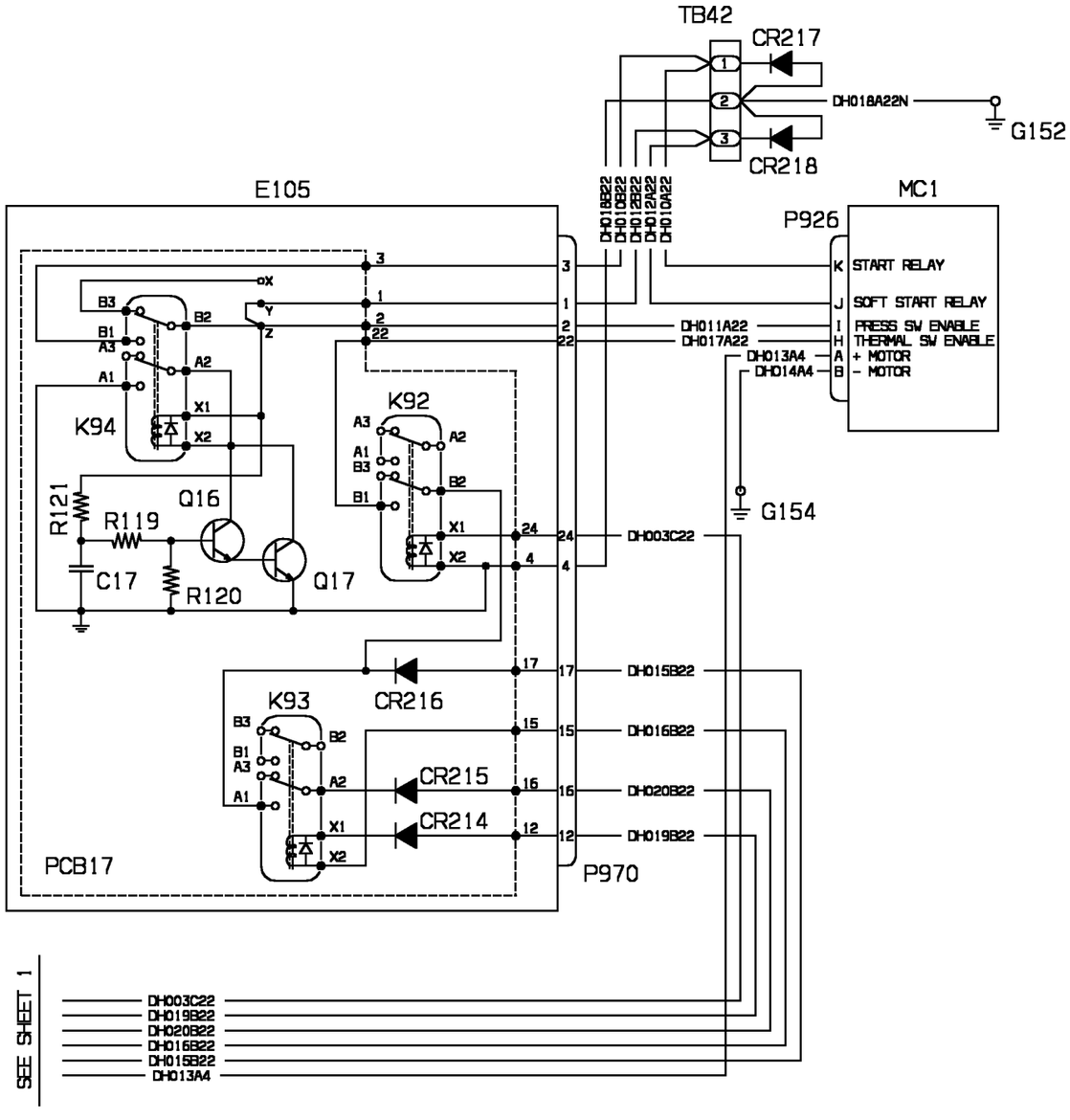


WM_215200KKC2

| EFFECTIVITY: | COOLING |
|---|---|
| 1032,1034-1036,1037, 1039,1040,1045 | Freon Air Conditioner System Progres s.r.l. |

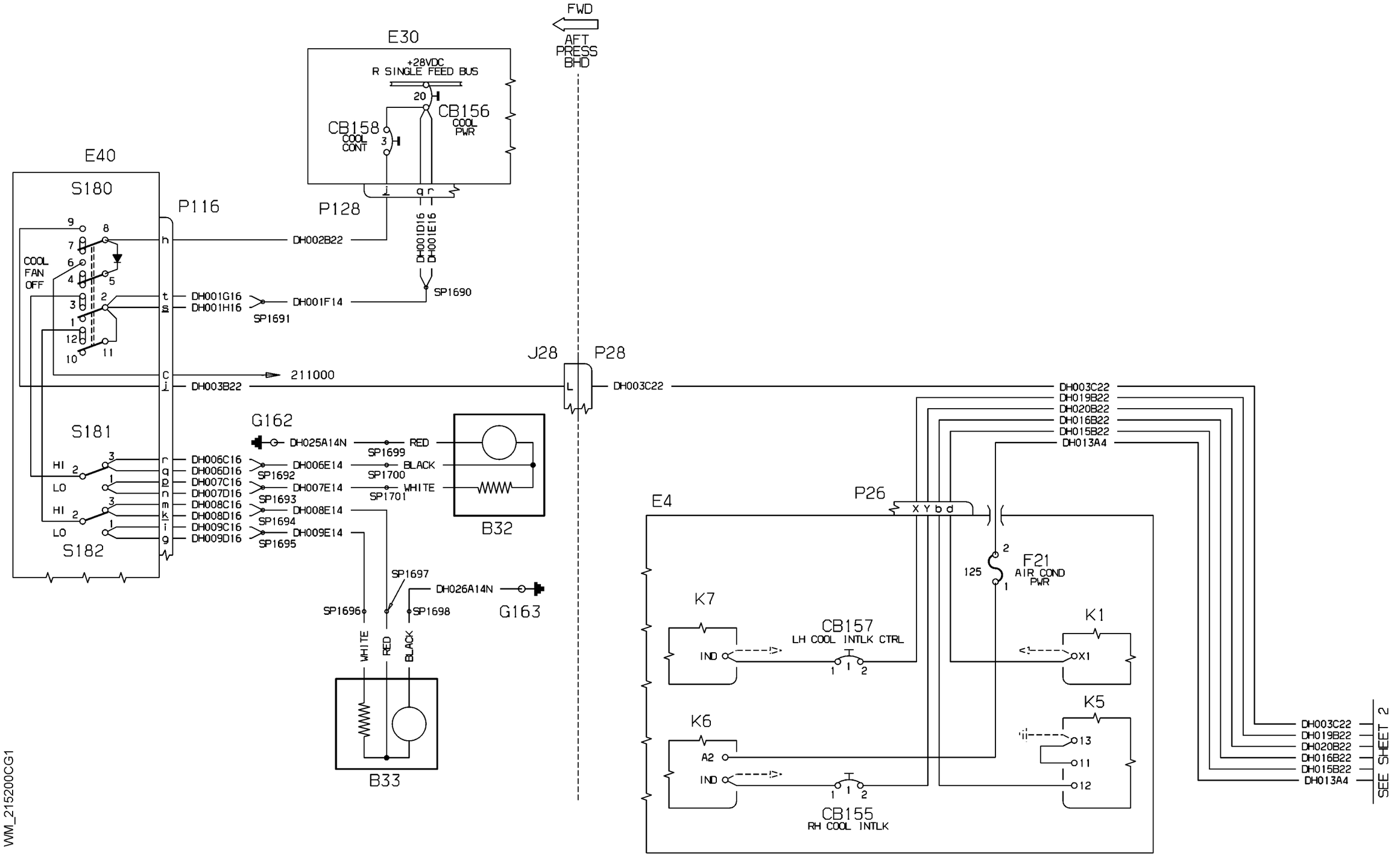


| EFFECTIVITY: | COOLING |
|---|---|
| 1041-1042,1044,<br>1046-1049,1052-1053,<br>1055-1056,1058-1104 | Freon Air Conditioner System KEITH |

**21-52-00**

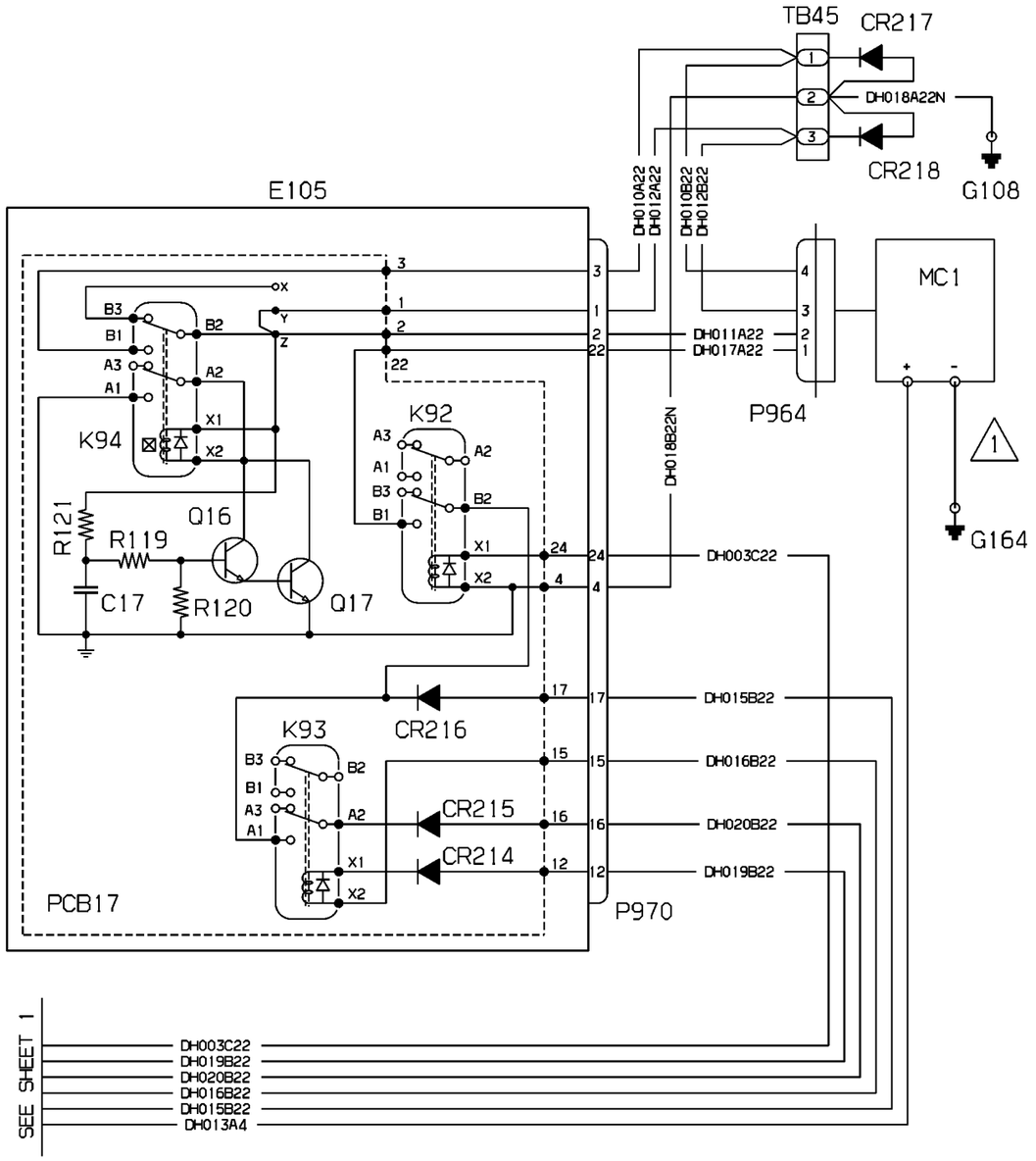


WM_215200CG2

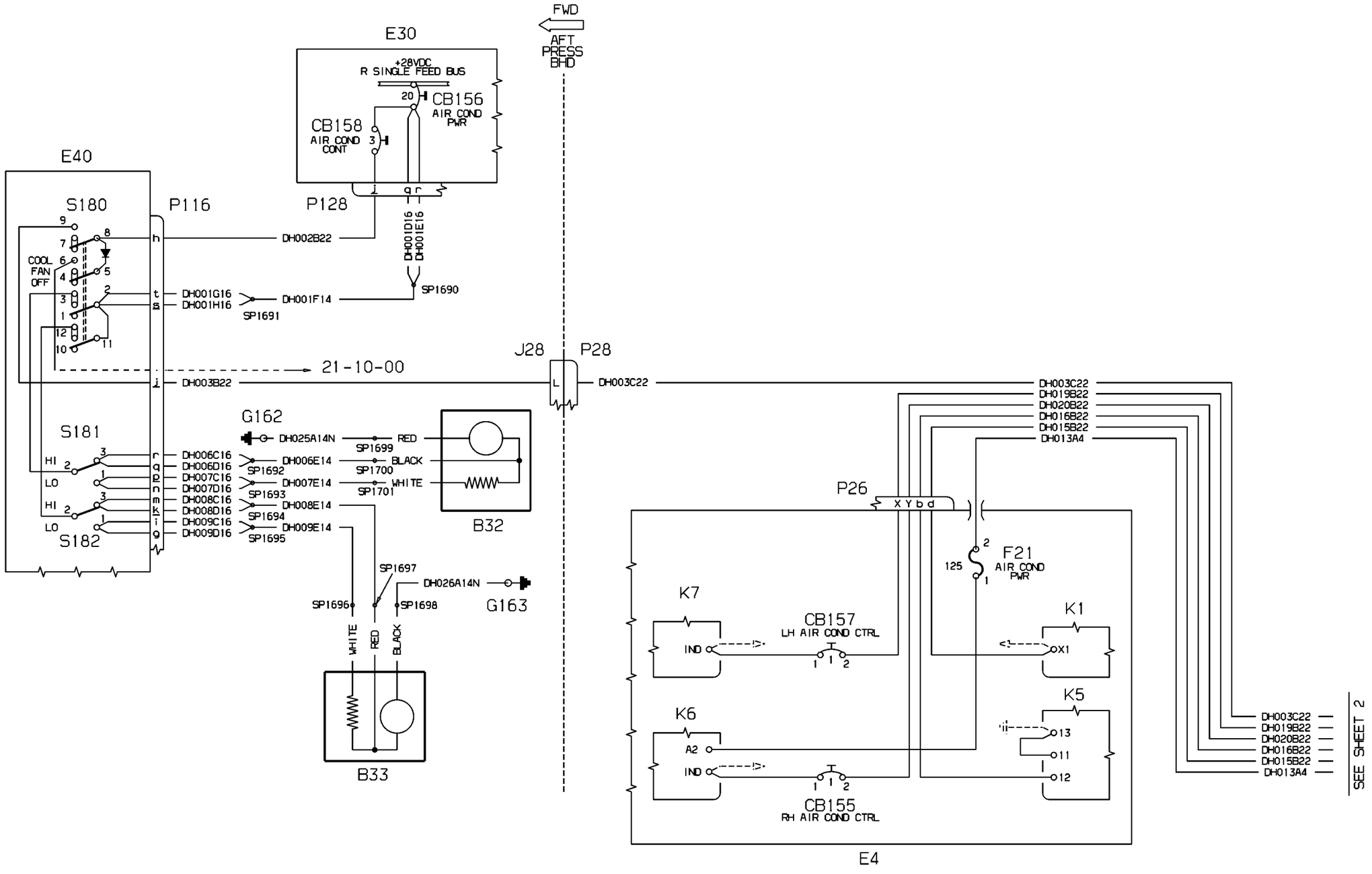


WM_215200KKD1

| EFFECTIVITY: | COOLING |
|---|---|
| 1033,1041-1042,1044, 1046-1049,1052,1053, 1055-1056,1058-1104 | Freon Air Conditioner System KEITH With Protection (Opt.) |

**21-52-00**

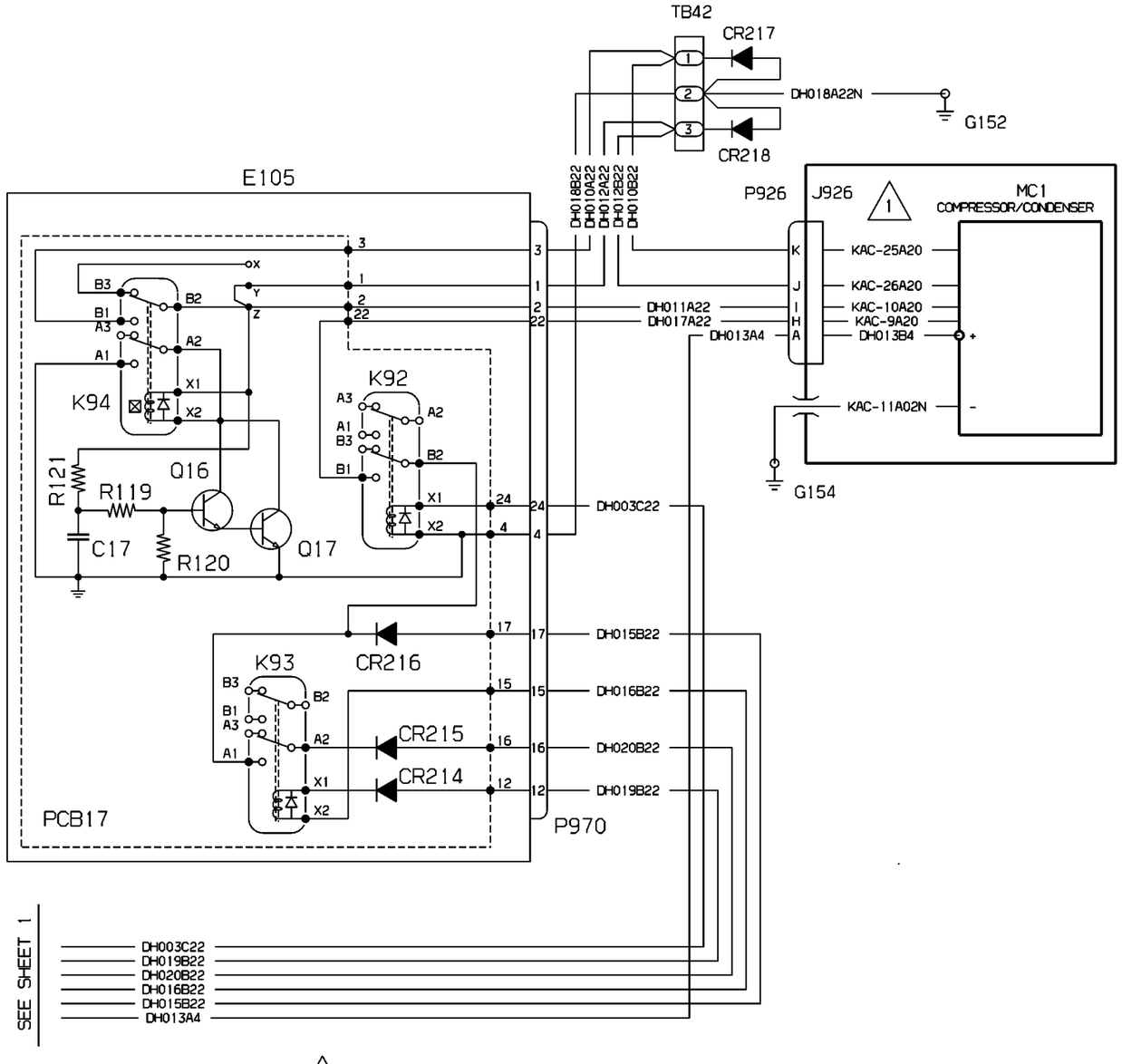


1 WIRE IS PART OF COMPRESSOR UNIT.

WM_215200KKD2

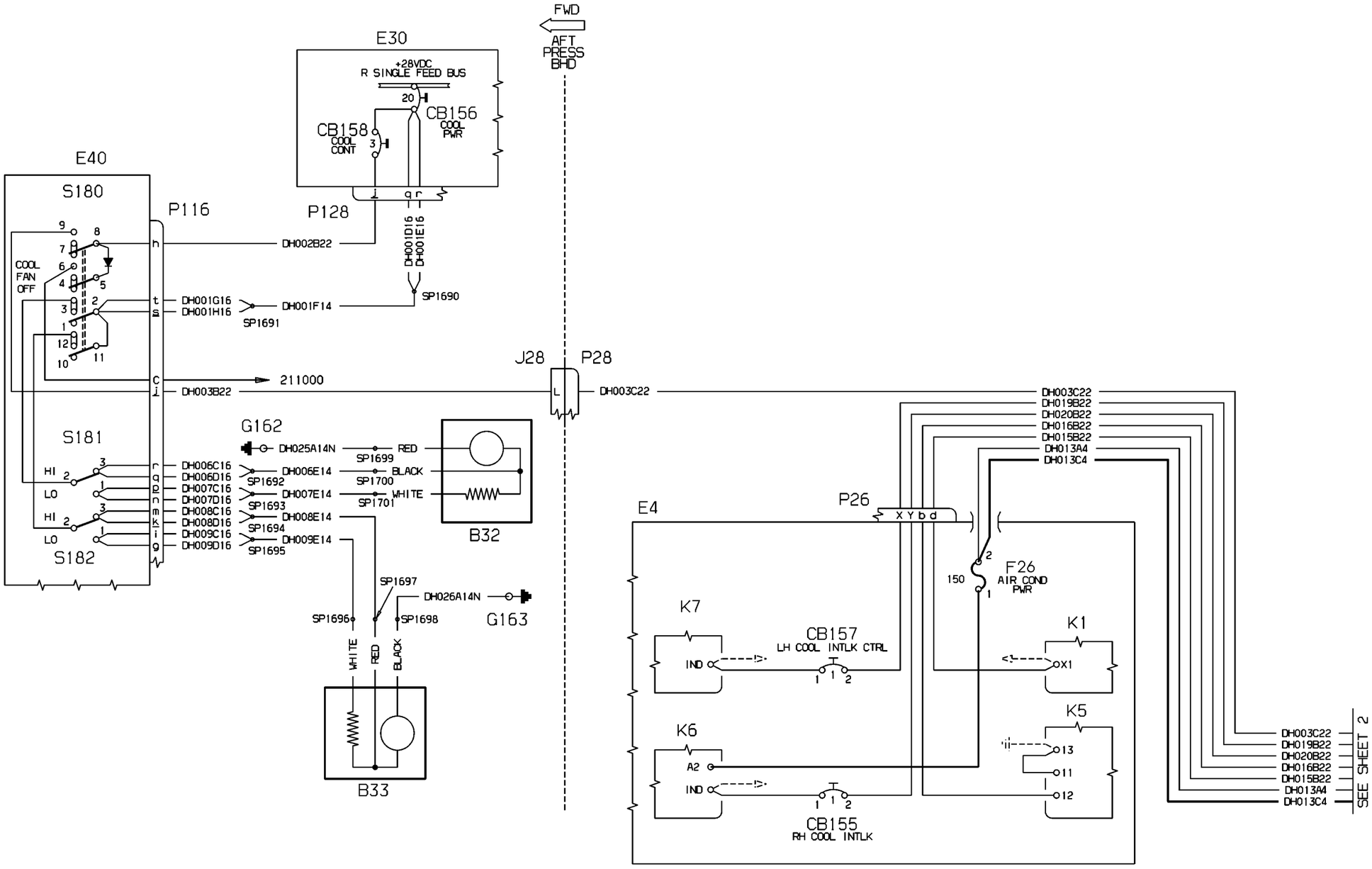


WM_215200KKE1

| EFFECTIVITY: | COOLING |
|---|---|
| 1041-1042,1044,<br>1046-1049,1052-1053,<br>1055-1056,1058-1104 | Freon Air Conditioner System KEITH Third Evaporator (Opt.) |

**21-52-00**

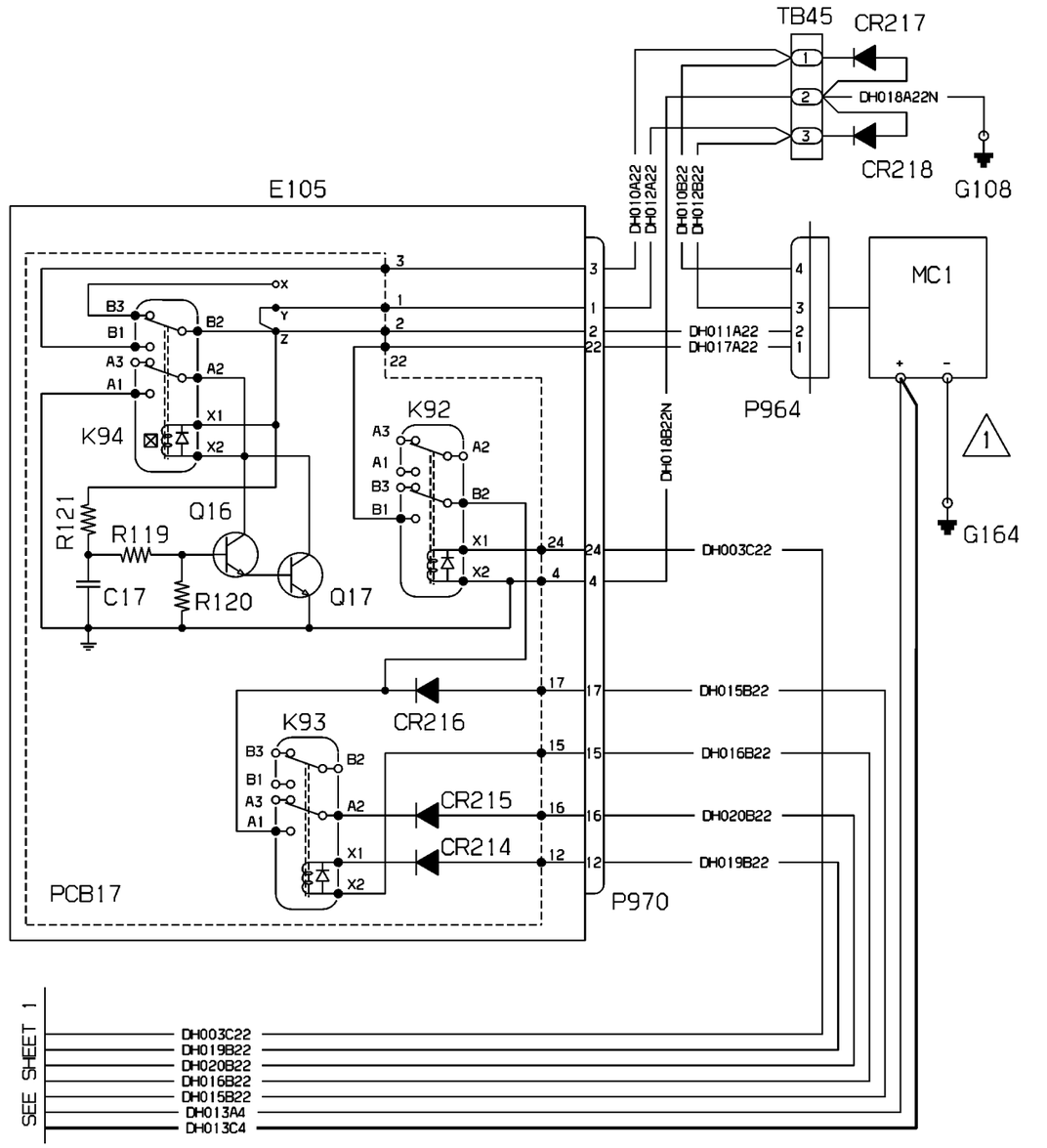


WM_215200KKE2

| EFFECTIVITY: | COOLING |
|---|---|
| 1041-1042,1044,<br>1046-1049,1052-1053,<br>1055-1056,1058-1104 | Freon Air Conditioner System KEITH Third Evaporator (Opt.) |

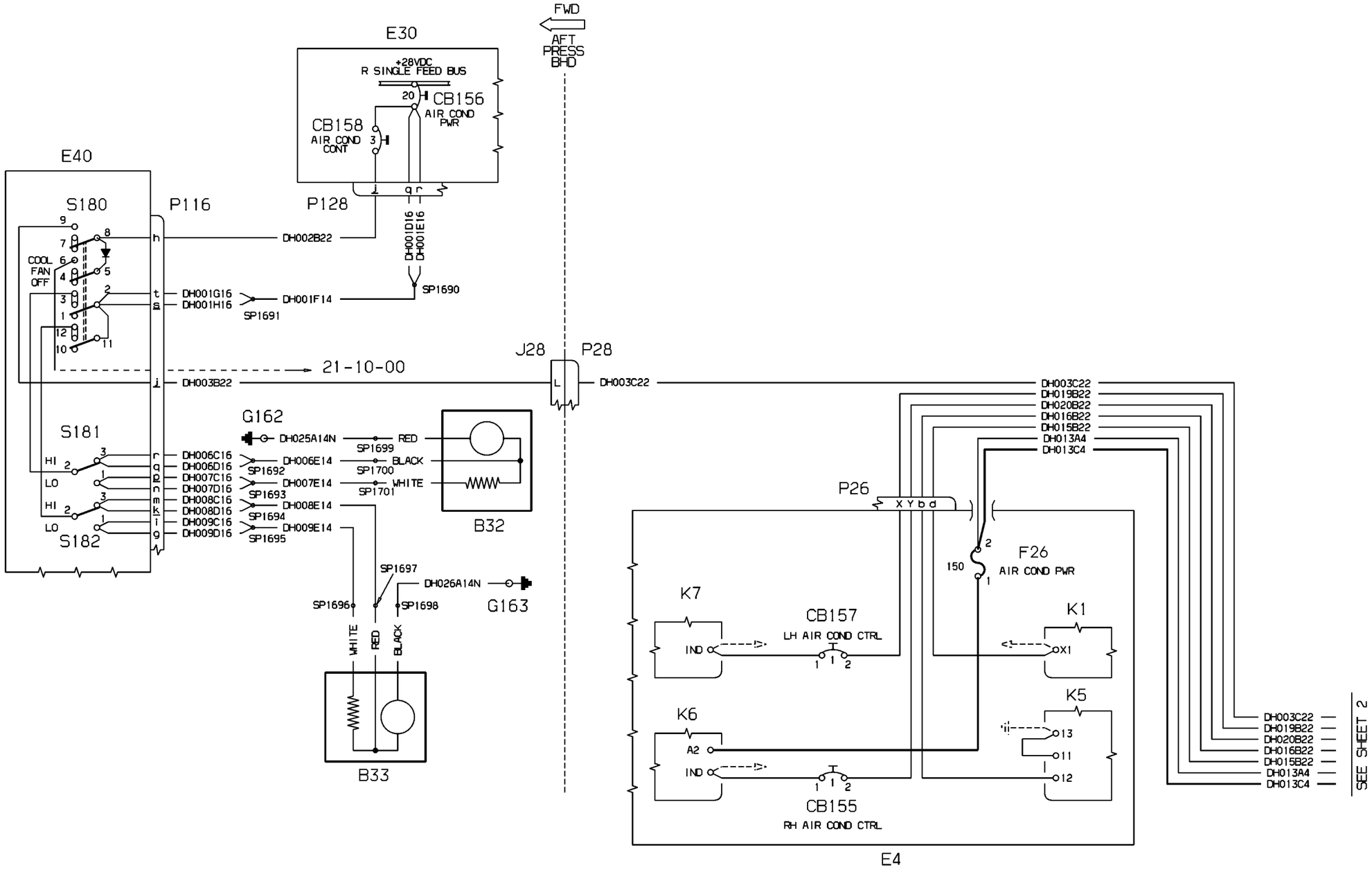


WM_215200KKF1

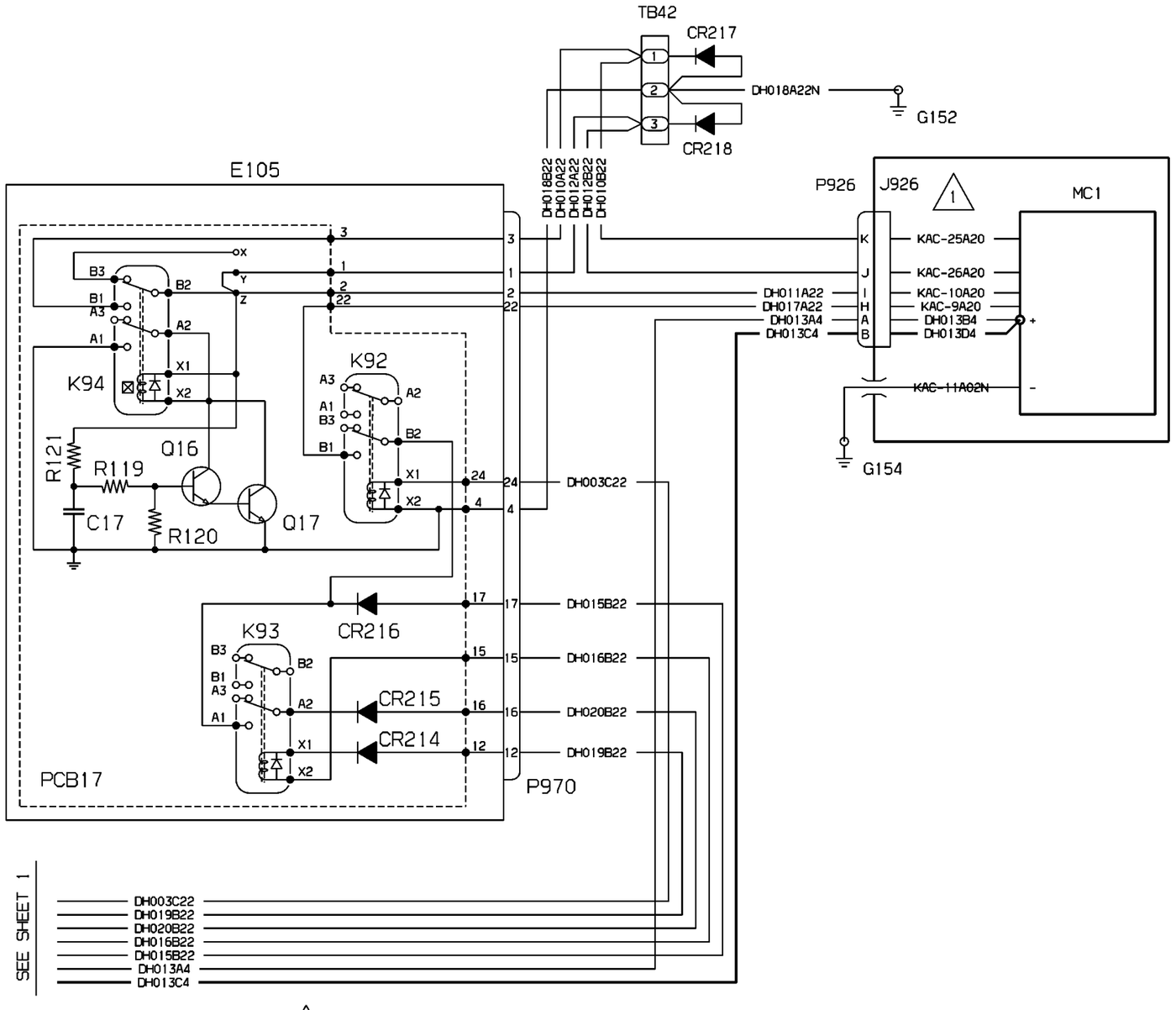


WM_215200KKF2

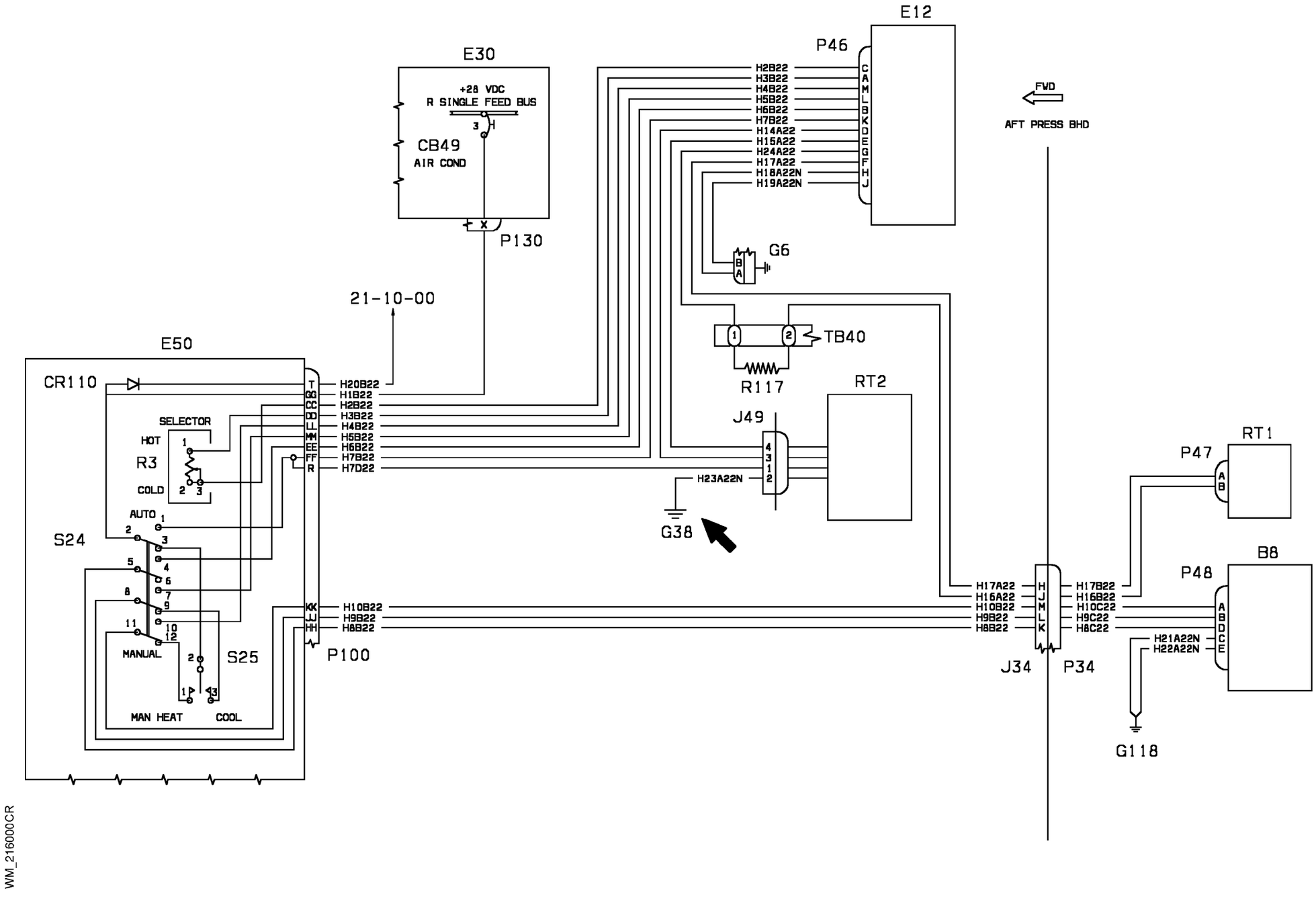


| EFFECTIVITY: | TEMPERATURE CONTROL |
|---|---|
| 1004-1040,1043,1045, 1050-1051,1054,1057 | Cabin Air Temperature Control |

CHAPTER 22 - AUTOFLIGHT
LIST OF EFFECTIVE PAGES

| CHAPTER SECTION SUBJECT | PAGE | SHEET | DATE |
|---|---|---|---|
| 22 - LOEP | 1 | | June 30/10 |
| | 2 | | June 30/10 |
| 22 - TOC | 1 | | June 30/10 |
| | 2 | | June 30/10 |
| 22-10-00 | 1 | 1 | June 30/10 |
| 22-10-00 | 1 | 2 | June 30/10 |
| 22-10-00 | 1 | 3 | June 30/10 |
| 22-10-00 | 1 | 4 | June 30/10 |
| 22-10-00 | 2 | 1 | June 30/10 |
| 22-10-00 | 2 | 2 | June 30/10 |
| 22-10-00 | 2 | 3 | June 30/10 |
| 22-10-00 | 2 | 4 | June 30/10 |
| 22-11-00 | 1 | 1 | Oct. 30/09 |
| 22-11-00 | 1 | 2 | Oct. 30/09 |
| 22-11-00 | 1 | 3 | Oct. 30/09 |
| 22-11-00 | 1 | 4 | Oct. 30/09 |

INTENTIONALLY LEFT BLANK

CHAPTER 22 - AUTOFLIGHT
TABLE OF CONTENTS


| SUBJECT | CHAPTER SECTION SUBJECT | PAGE | SHEET |
|---|---|---|---|
| AUTOFLIGHT | | | |
| Autopilot System | 22-10-00 | 1 | 1 |
| Autopilot System | 22-10-00 | 1 | 2 |
| Autopilot System | 22-10-00 | 1 | 3 |
| Autopilot System | 22-10-00 | 1 | 4 |
| Autopilot System | 22-10-00 | 2 | 1 |
| Autopilot System | 22-10-00 | 2 | 2 |
| Autopilot System | 22-10-00 | 2 | 3 |
| Autopilot System | 22-10-00 | 2 | 4 |
| Cat 2 (Opt.) | 22-11-00 | 1 | 1 |
| Cat 2 (Opt.) | 22-11-00 | 1 | 2 |
| Cat 2 (Opt.) | 22-11-00 | 1 | 3 |
| Cat 2 (Opt.) | 22-11-00 | 1 | 4 |

INTENTIONALLY LEFT BLANK

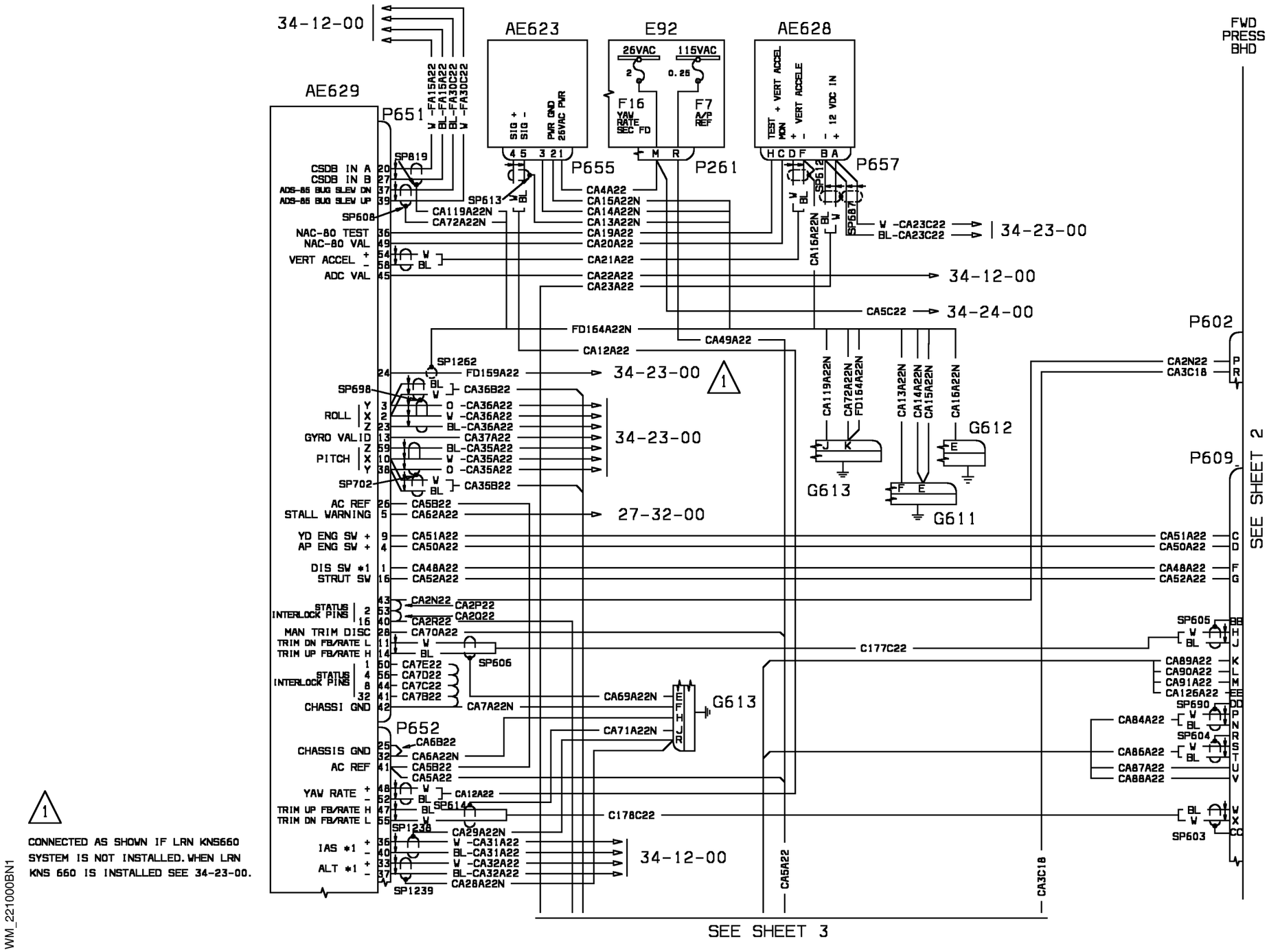


1 CONNECTED AS SHOWN IF LRN KNS660 SYSTEM IS NOT INSTALLED. WHEN LRN KNS 660 IS INSTALLED SEE 34-23-00.

WM_221000BN1

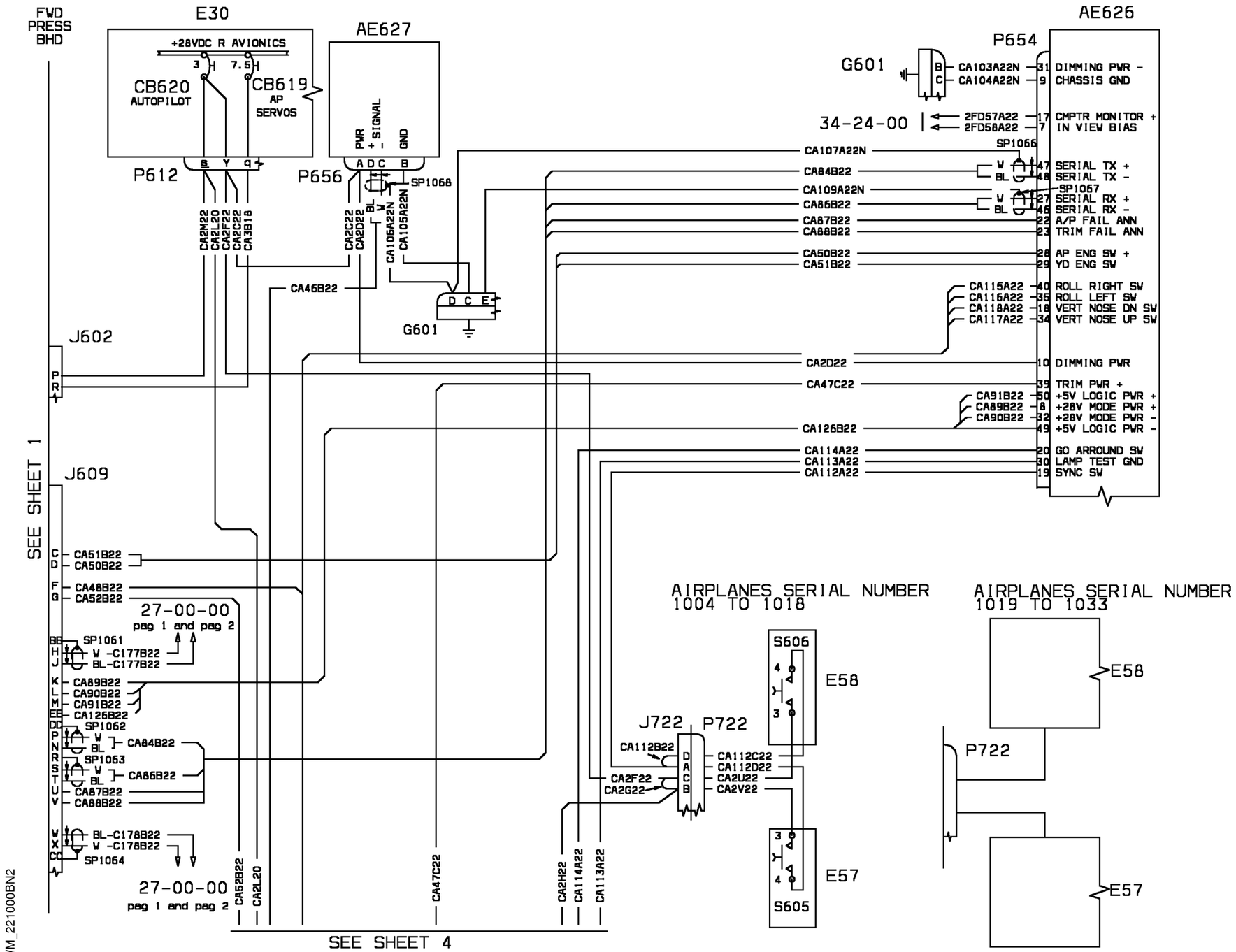


| EFFECTIVITY: | AUTOFLIGHT |
|---|---|
| 1004-1033 | Autopilot System |

**22-10-00**

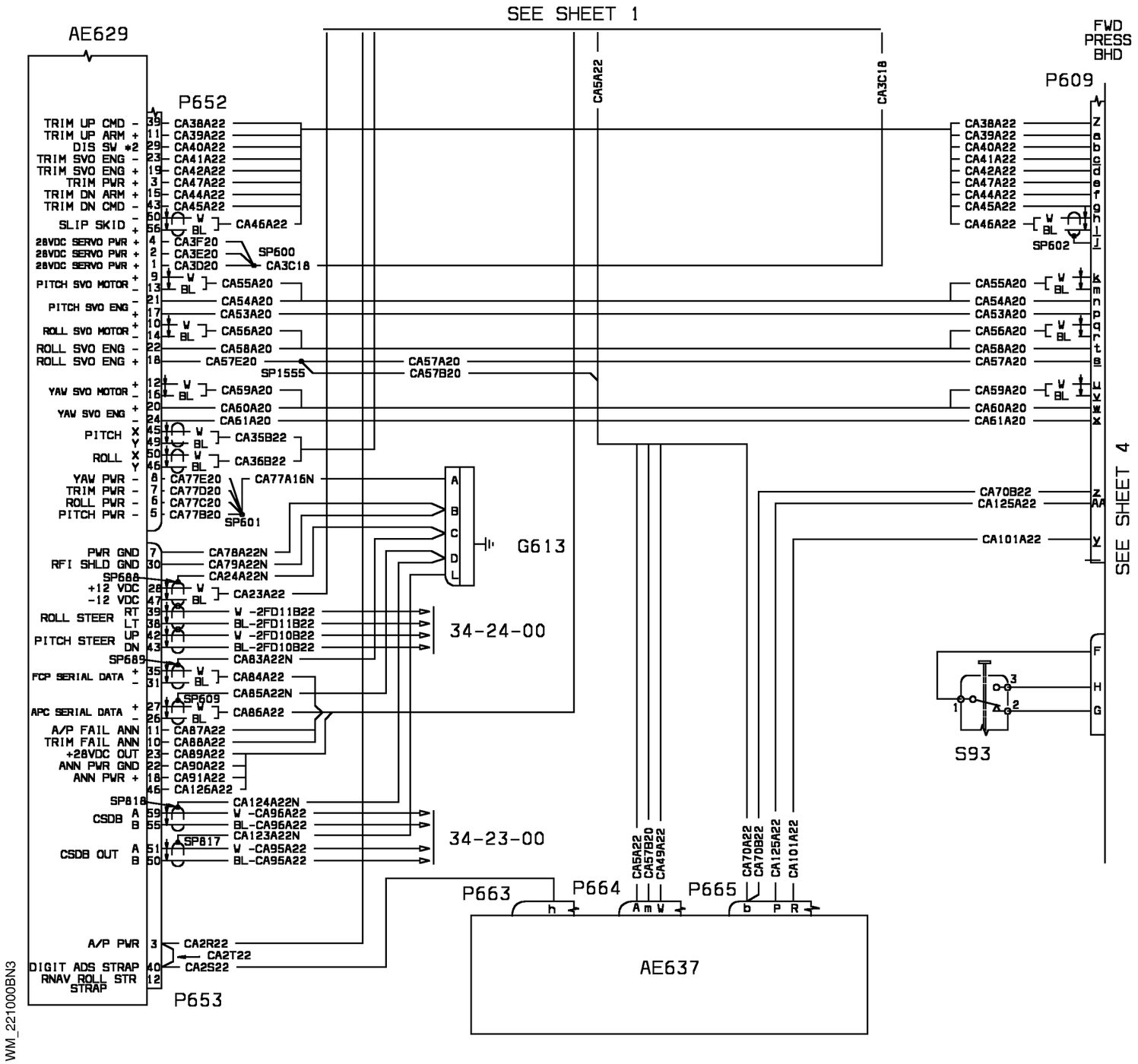


| EFFECTIVITY: 1004-1033 | AUTOFLIGHT<br>Autopilot System |
|---|---|

**22-10-00**

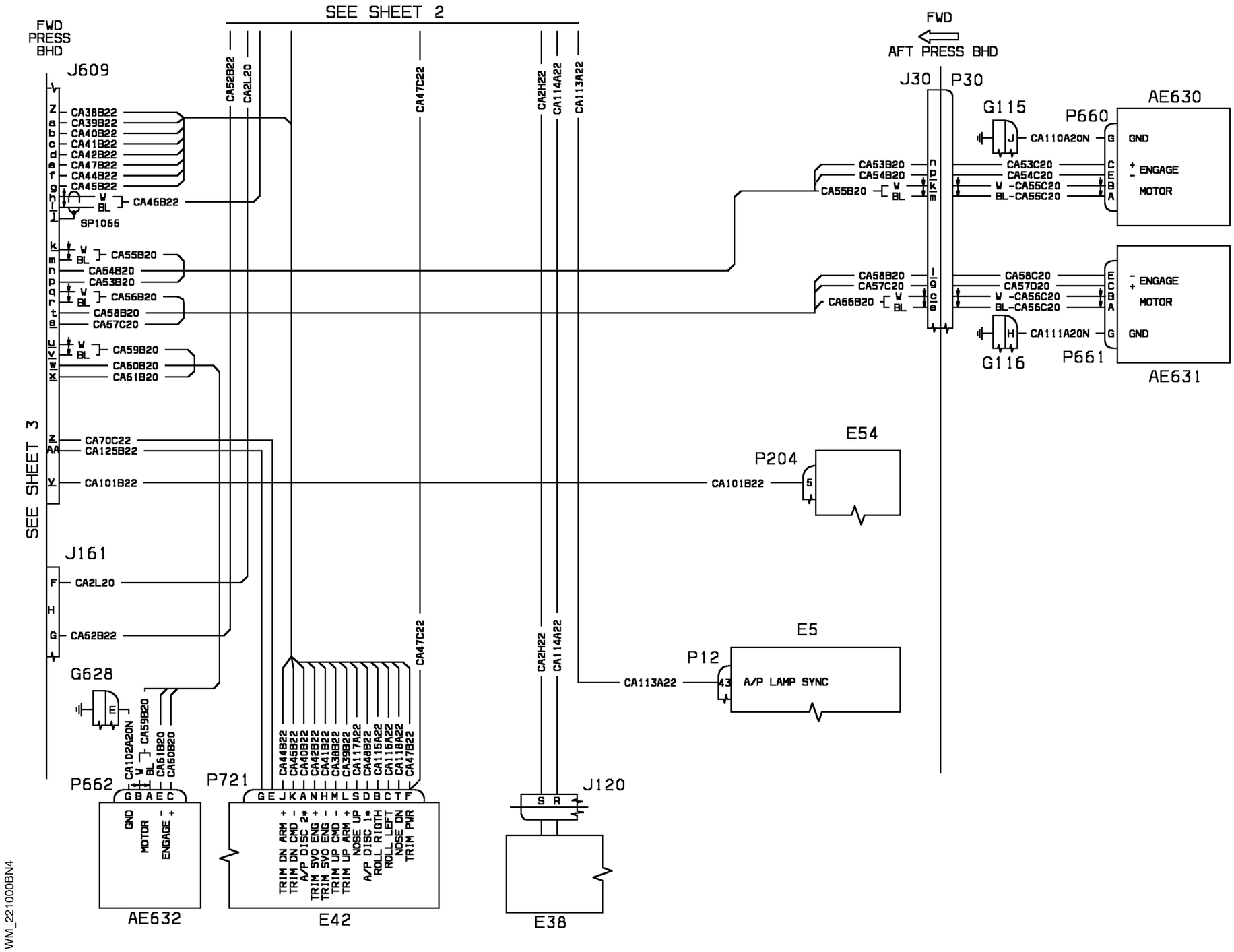


WM_221000BN4

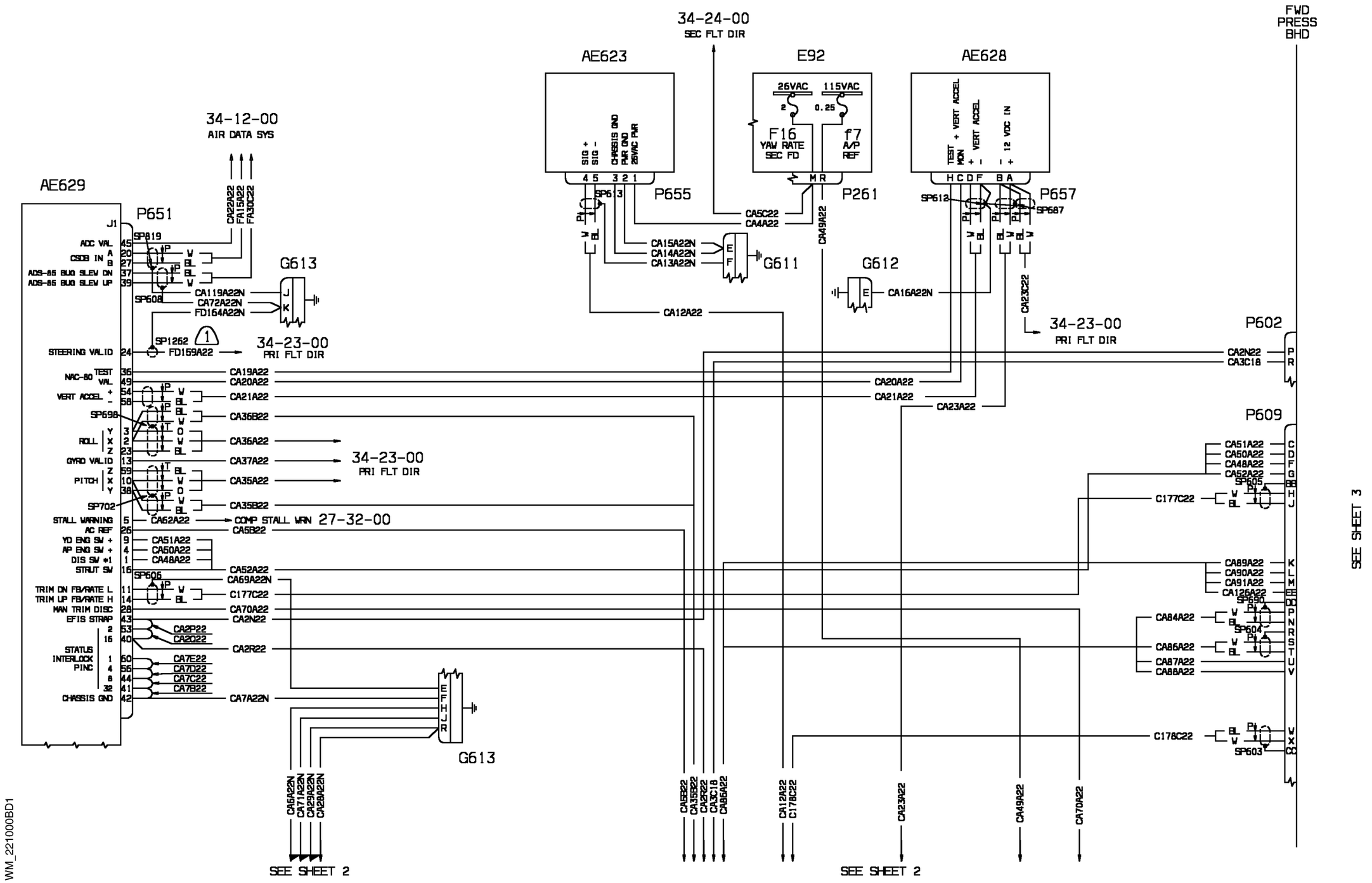
34-24-00
SEC FLT DIR
AE623
E92
AE628
FWD
PRESS
BHD
34-12-00
AIR DATA SYS
AE629
P651
P655
P261
P657
G613
G611
G612
34-23-00
PRI FLT DIR
P602
P609
34-23-00
PRI FLT DIR
COMP STALL WRN 27-32-00
SEE SHEET 3
SEE SHEET 2
SEE SHEET 2
WM_221000BD1

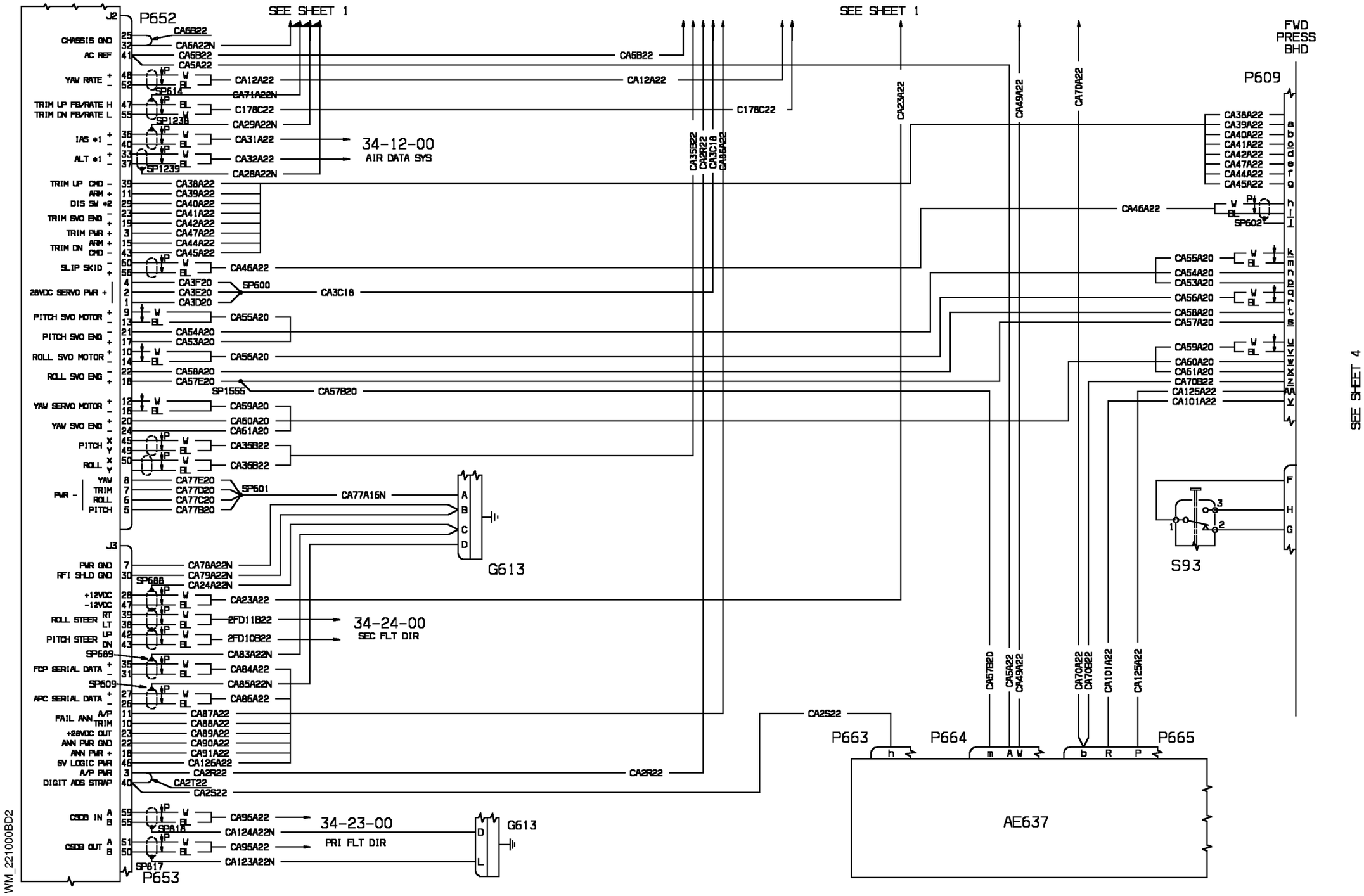
P652
J2
SEE SHEET 1
CHASSIS GND
AC REF
YAW RATE
TRIM UP FB/RATE H
TRIM DN FB/RATE L
IAS #1
ALT #1
TRIM UP CMD
ARM
DIS SW #2
TRIM SVO ENG
TRIM PWR
TRIM DN ARM
CMD
SLIP SKID
28VDC SERVO PWR
PITCH SVO MOTOR
PITCH SVO ENG
ROLL SVO MOTOR
ROLL SVO ENG
YAW SERVO MOTOR
YAW SVO ENG
PITCH
ROLL
PWR
YAW
TRIM
ROLL
PITCH
CA6B22
CA6A22N
CA5B22
CA5A22
CA12A22
CA71A22N
SP614
C178C22
CA29A22N
SP1238
CA31A22
CA32A22
SP1239
CA28A22N
34-12-00
AIR DATA SYS
CA38A22
CA39A22
CA40A22
CA41A22
CA42A22
CA47A22
CA44A22
CA45A22
CA46A22
SP600
CA3F20
CA3E20
CA3D20
CA3C18
CA55A20
CA54A20
CA53A20
CA56A20
CA58A20
CA57E20
SP1555
CA57B20
CA59A20
CA60A20
CA61A20
CA35B22
CA36B22
CA77E20
CA77D20
CA77C20
CA77B20
SP601
CA77A16N
A
B
C
D
G613
J3
P653
PWR GND
RFI SHLD GND
+12VDC
-12VDC
ROLL STEER
PITCH STEER
FCP SERIAL DATA
APC SERIAL DATA
FAIL ANN
TRIM
+28VDC OUT
ANN PWR GND
ANN PWR +
5V LOGIC PWR
A/P PWR
DIGIT ADS STRAP
CSDB IN
CSDB OUT
CA78A22N
CA79A22N
CA24A22N
SP688
CA23A22
2FD11B22
2FD10B22
34-24-00
SEC FLT DIR
CA83A22N
SP689
CA84A22
SP609
CA85A22N
CA86A22
CA87A22
CA88A22
CA89A22
CA90A22
CA91A22
CA126A22
CA2R22
CA2T22
CA2S22
CA96A22
CA124A22N
SP818
34-23-00
PRI FLT DIR
CA95A22
CA123A22N
SP817
D
L
G613
SEE SHEET 1
CA5B22
CA12A22
C178C22
CA35B22
CA2R22
CA3C18
CA86A22
CA23A22
CA49A22
CA70A22
FWD
PRESS
BHD
P609
CA38A22
CA39A22
CA40A22
CA41A22
CA42A22
CA47A22
CA44A22
CA45A22
CA46A22
SP602
CA55A20
CA54A20
CA53A20
CA56A20
CA58A20
CA57A20
CA59A20
CA60A20
CA61A20
CA70B22
CA125A22
CA101A22
F
H
G
S93
1
2
3
CA57B20
CA35A22
CA49A22
CA70A22
CA70B22
CA101A22
CA125A22
CA2S22
P663
P664
P665
h
m
A
W
b
R
P
AE637
SEE SHEET 4
WM_221000BD2

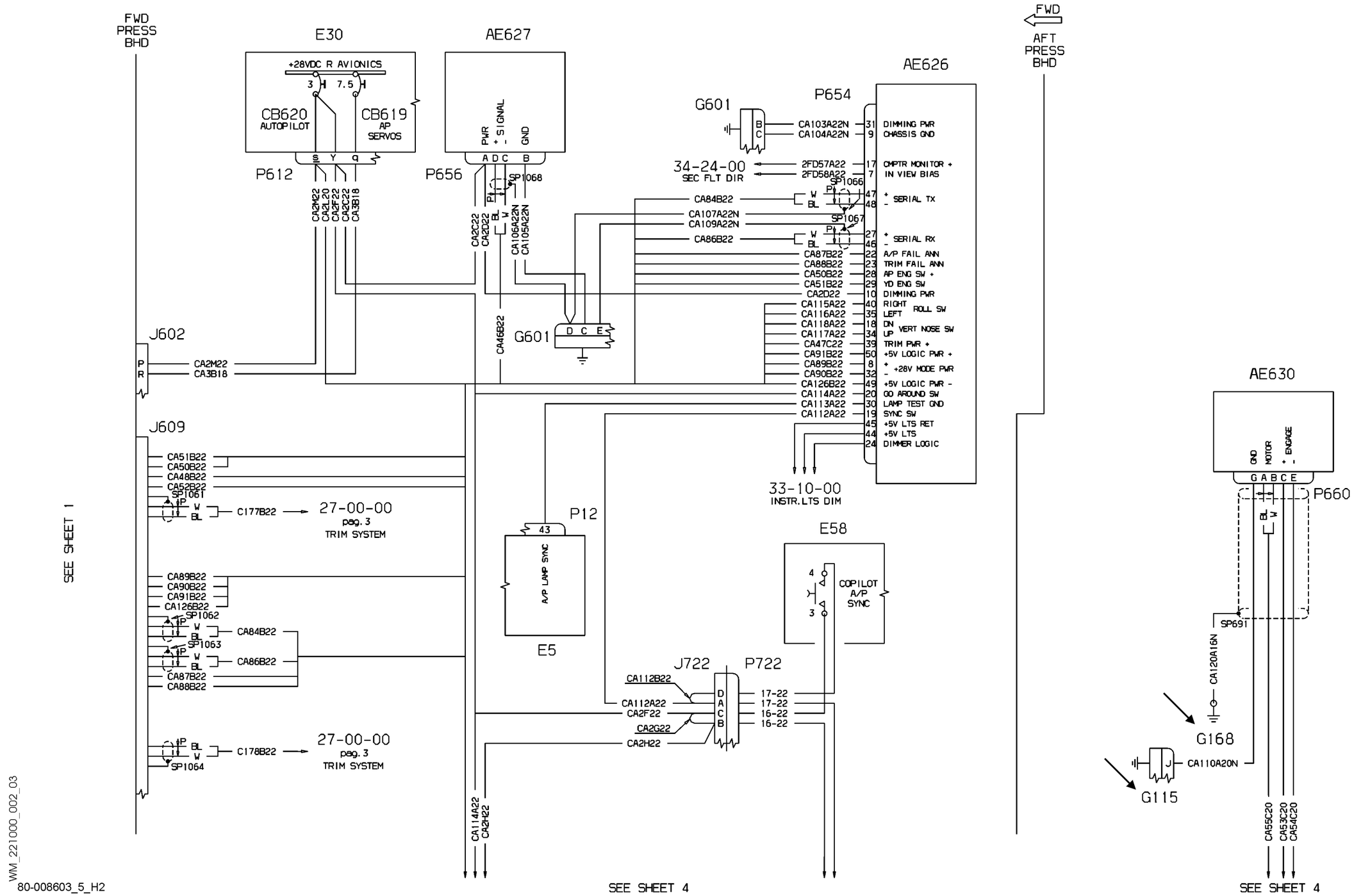


WM_221000_002_03

80-008603_5_H2

| EFFECTIVITY: | AUTOFLIGHT |
|---|---|
| 1034-1104 | Autopilot System |

**22-10-00**

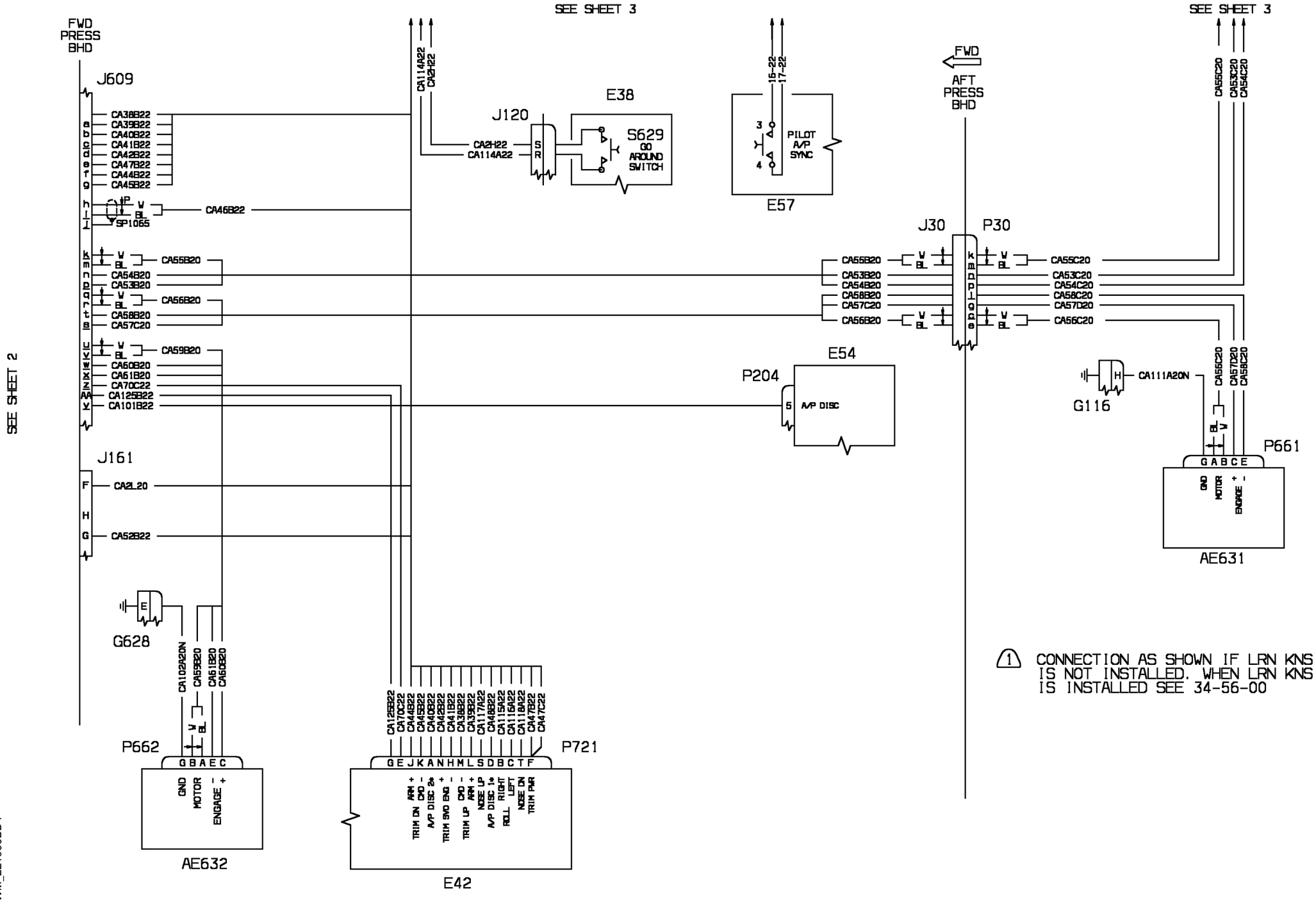


WM_221000BD4

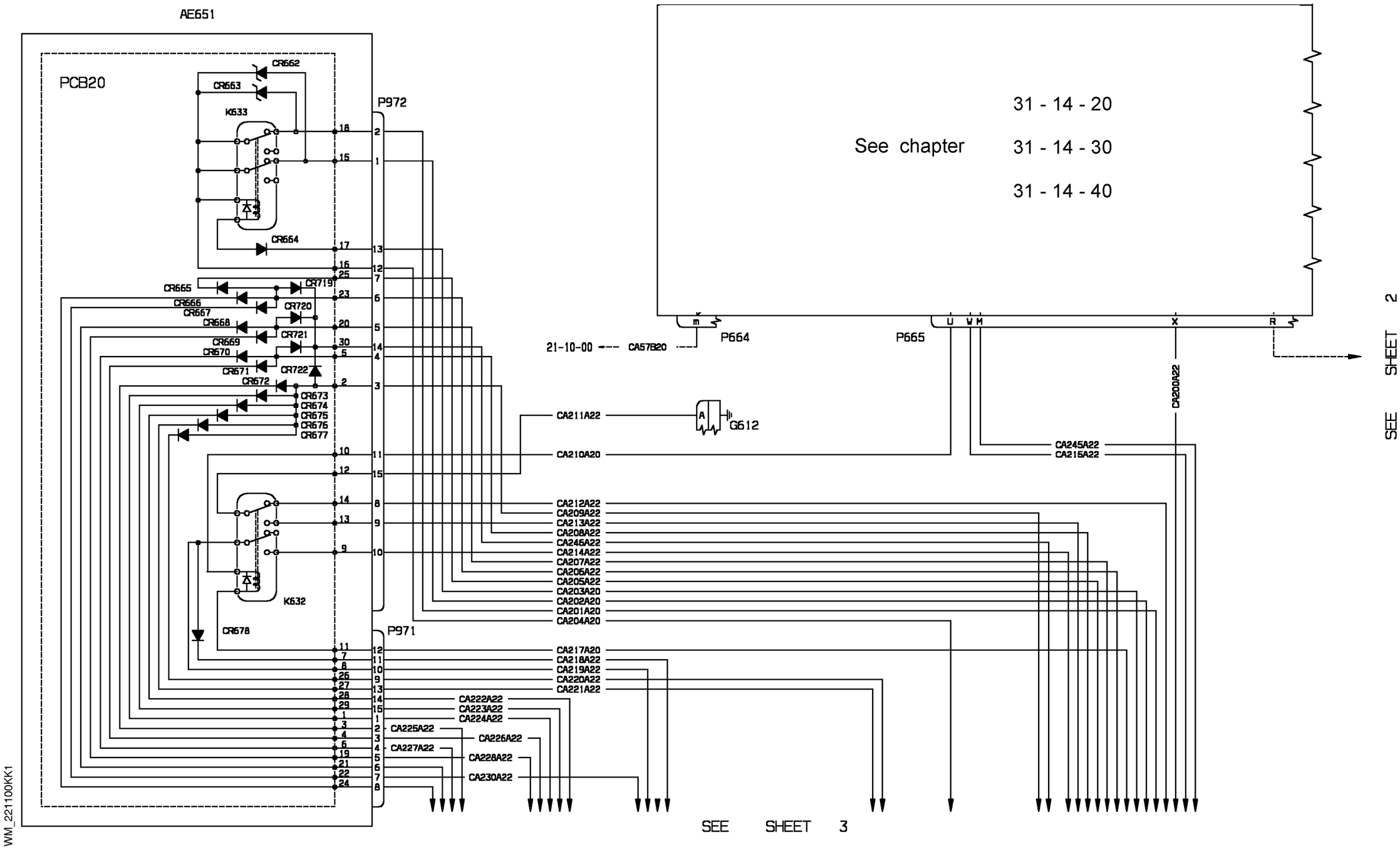


| EFFECTIVITY: | AUTOFLIGHT<br>Cat 2 (Opt.) |
|---|---|

**22-11-00**

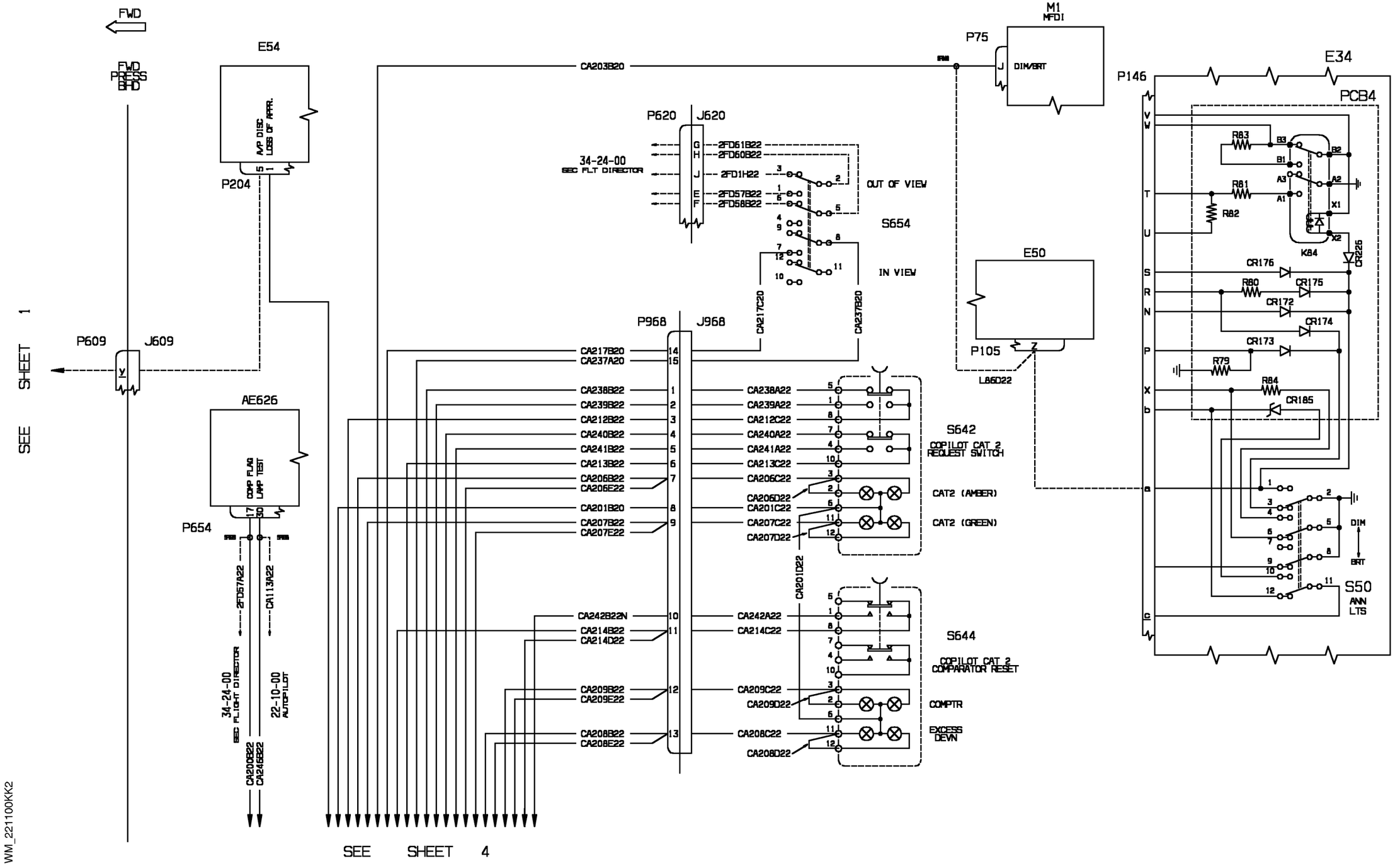


WM_221100KK2

| EFFECTIVITY: | AUTOFLIGHT<br>Cat 2 (Opt.) |
|---|---|

**22-11-00**

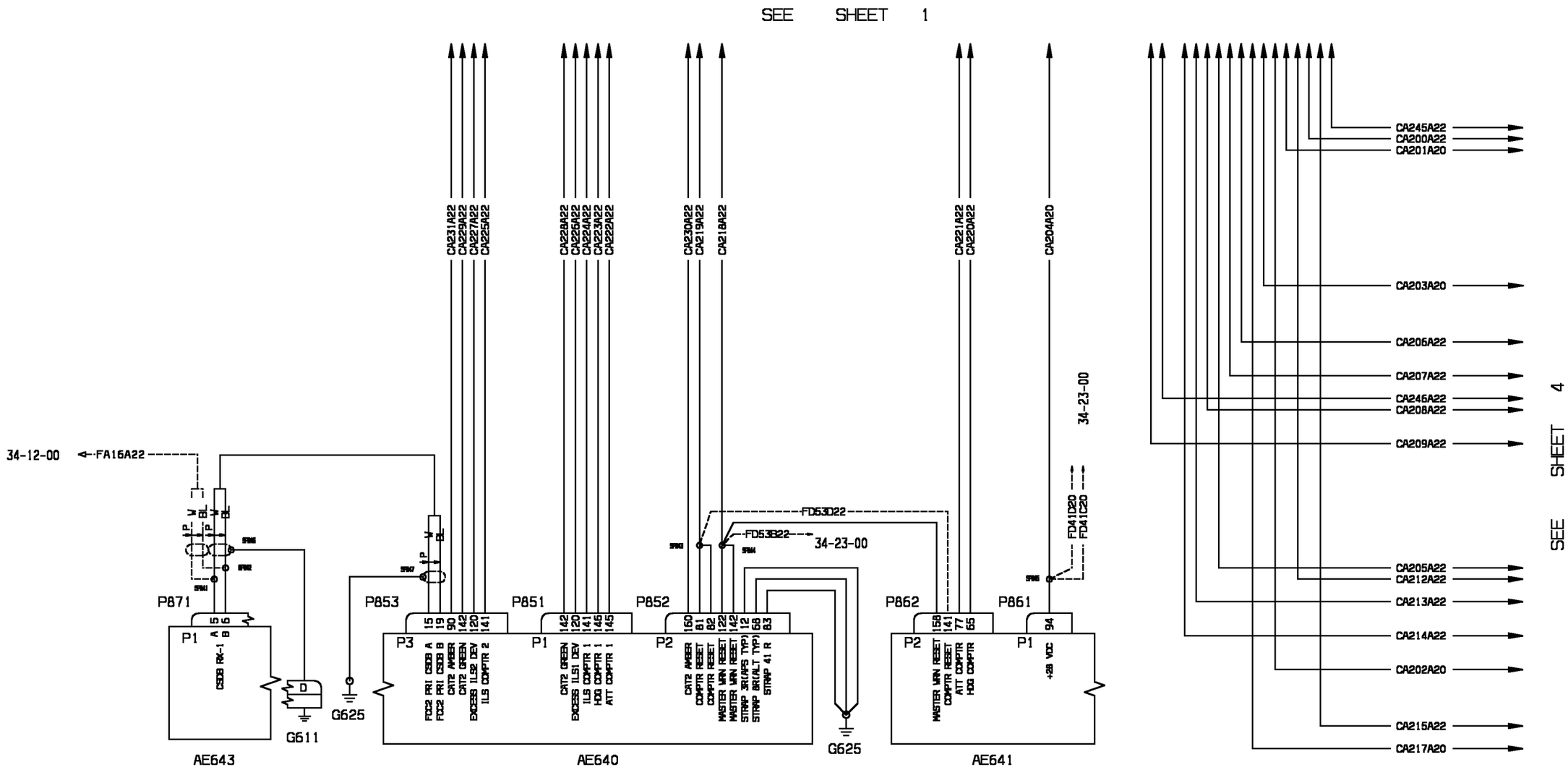


WM_221100KK3

| EFFECTIVITY: | AUTOFLIGHT<br>Cat 2 (Opt.) |
|---|---|

**22-11-00**

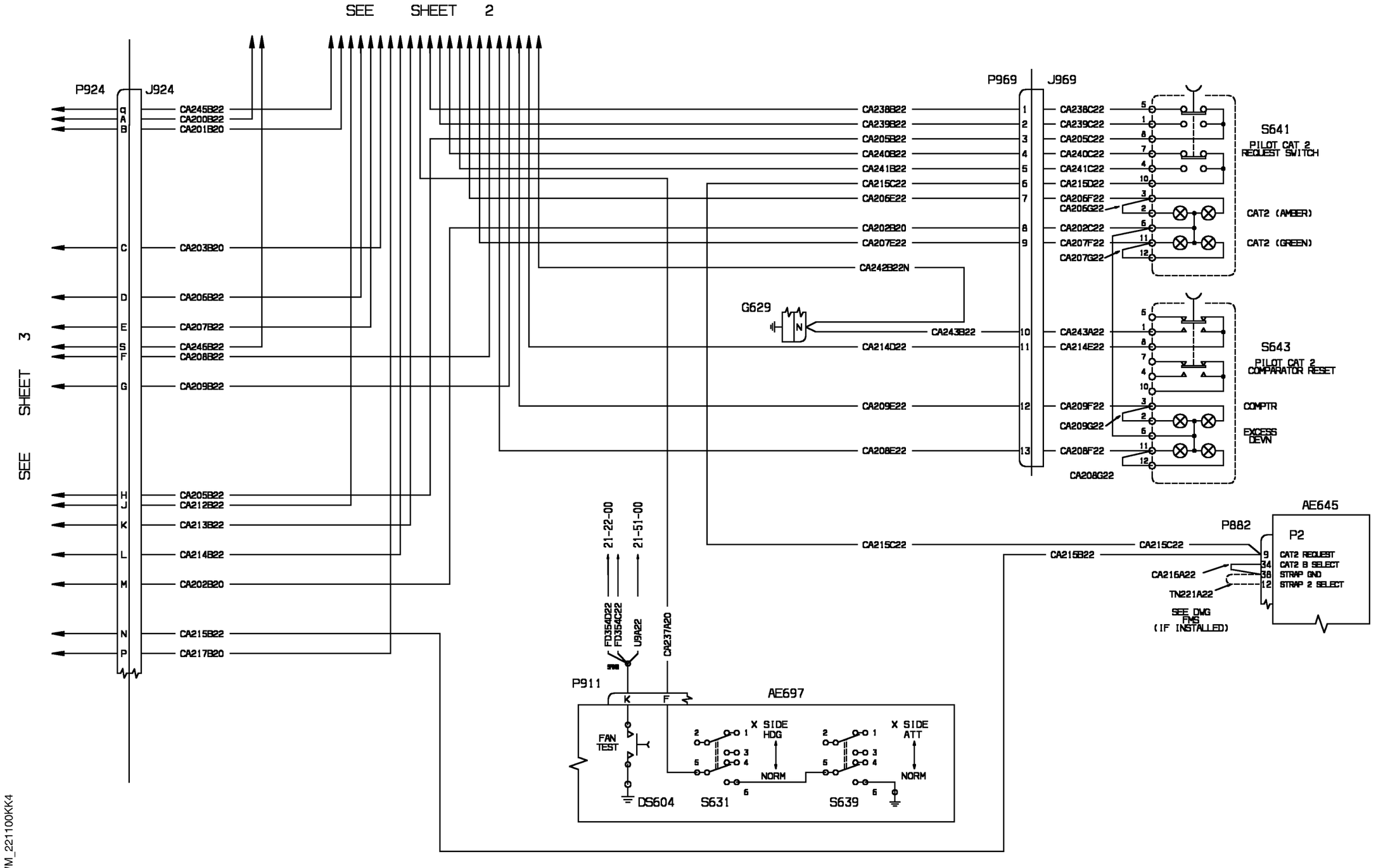


WM_221100KK4

| EFFECTIVITY: | AUTOFLIGHT<br>Cat 2 (Opt.) |
|---|---|

**22-11-00**

CHAPTER 23 - COMMUNICATIONS
LIST OF EFFECTIVE PAGES

| CHAPTER SECTION SUBJECT | PAGE | SHEET | DATE |
|---|---|---|---|
| 23 - LOEP | 1 | | June 30/10 |
| | 2 | | June 30/10 |
| 23 - TOC | 1 | | June 30/10 |
| | 2 | | June 30/10 |
| 23-11-20 | 1 | | June 30/10 |
| 23-12-20 | 1 | | Oct. 30/09 |
| 23-13-10 | 1 | | Oct. 30/09 |
| 23-13-20 | 1 | | Oct. 30/09 |
| 23-13-20 | 2 | | Oct. 30/09 |
| 23-14-00 | 1 | | Oct. 30/09 |
| 23-30-00 | 1 | 1 | Oct. 30/09 |
| 23-30-00 | 1 | 2 | Oct. 30/09 |
| 23-30-00 | 2 | 1 | Oct. 30/09 |
| 23-30-00 | 2 | 2 | Oct. 30/09 |
| 23-30-00 | 3 | 1 | Oct. 30/09 |
| 23-30-00 | 3 | 2 | Oct. 30/09 |
| 23-50-00 | 1 | 1 | Oct. 30/09 |
| 23-50-00 | 1 | 2 | Oct. 30/09 |
| 23-50-00 | 2 | 1 | Oct. 30/09 |
| 23-50-00 | 2 | 2 | Oct. 30/09 |
| 23-50-00 | 3 | 1 | Oct. 30/09 |
| 23-50-00 | 3 | 2 | Oct. 30/09 |
| 23-51-00 | 1 | | Oct. 30/09 |
| 23-52-00 | 1 | | Oct. 30/09 |
| 23-52-00 | 2 | | Oct. 30/09 |
| 23-70-00 | 1 | | Oct. 30/09 |

INTENTIONALLY LEFT BLANK

CHAPTER 23 - COMMUNICATIONS
TABLE OF CONTENTS


| SUBJECT | CHAPTER SECTION SUBJECT | PAGE | SHEET |
|---|---|---|---|
| SPEECH COMMUNICATIONS | | | |
| VHF - Primary | 23-11-20 | 1 | |
| VHF - Secondary | 23-12-20 | 1 | |
| HF (Optional) | 23-13-10 | 1 | |
| HF-LSB, USB | 23-13-20 | 1 | |
| HF-LSB, USB (Optional) | 23-13-20 | 2 | |
| VHF/FM HI Band (Optional) | 23-14-00 | 1 | |
| PASSENGER ADDRESS, ENTERTAINMENT AND COMFORT | | | |
| Video VCR (Optional) | 23-30-00 | 1 | 1 |
| Video VCR (Optional) | 23-30-00 | 1 | 2 |
| Video MDP (Optional) | 23-30-00 | 2 | 1 |
| Video MDP (Optional) | 23-30-00 | 2 | 2 |
| Video Air Show (Optional) | 23-30-00 | 3 | 1 |
| Video Air Show (Optional) | 23-30-00 | 3 | 2 |
| AUDIO INTEGRATING | | | |
| Audio | 23-50-00 | 1 | 1 |
| Audio | 23-50-00 | 1 | 2 |
| Audio | 23-50-00 | 2 | 1 |
| Audio | 23-50-00 | 2 | 2 |
| Audio | 23-50-00 | 3 | 1 |
| Audio | 23-50-00 | 3 | 2 |
| Audio Passenger Compartments | 23-51-00 | 1 | |
| Audio 3rd Position (Opt.) | 23-52-00 | 1 | |
| Passenger Rear Cabin Audio (Opt.) | 23-52-00 | 2 | |
| AUDIO & VIDEO MONITORING | | | |
| Cockpit Voice Recorder (Optional) | 23-70-00 | 1 | |

INTENTIONALLY LEFT BLANK

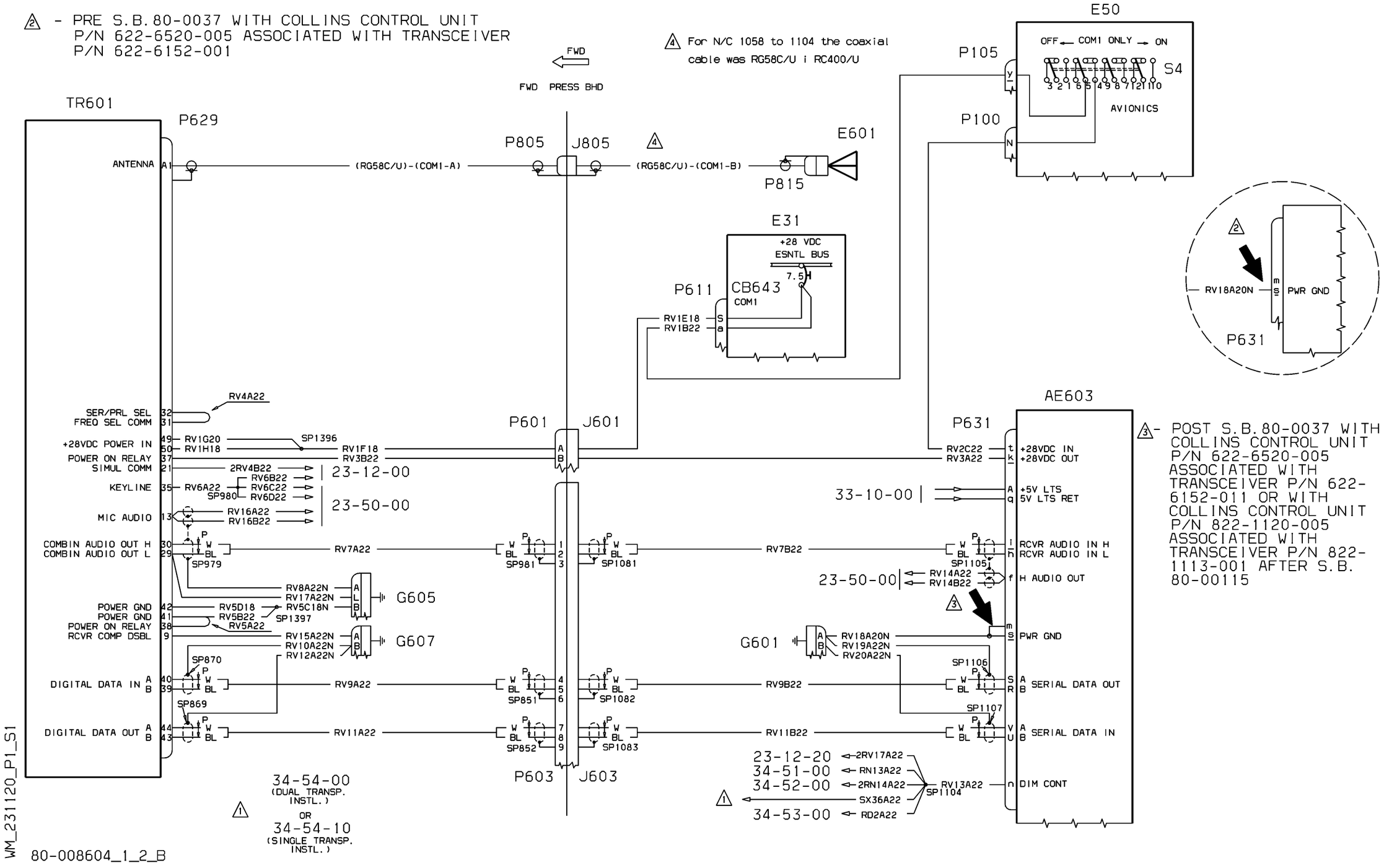


| EFFECTIVITY: | SPEECH COMMUNICATIONS<br>VHF - Primary |
|---|---|

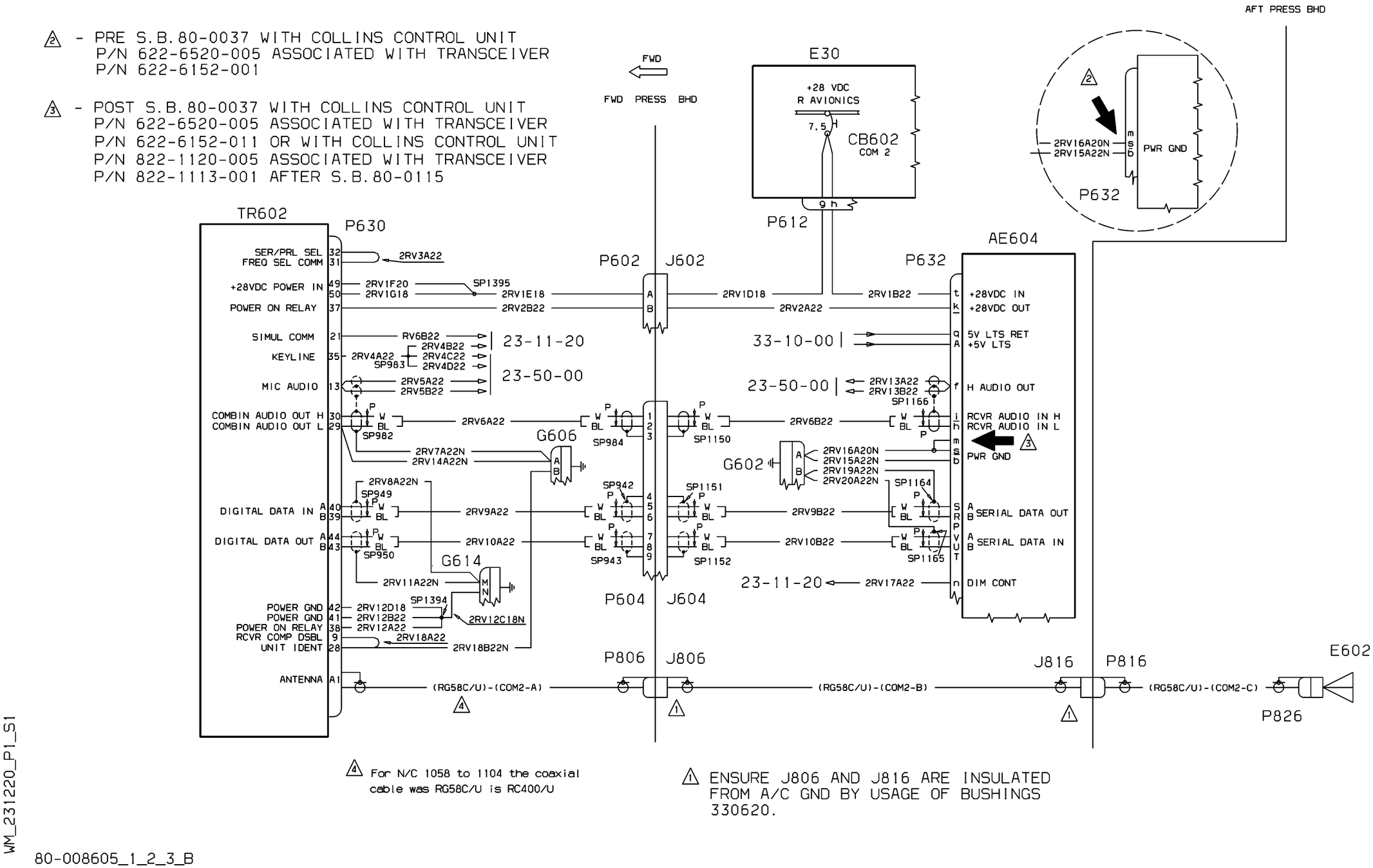


WM_231220_P1_S1

80-008605_1_2_3_B

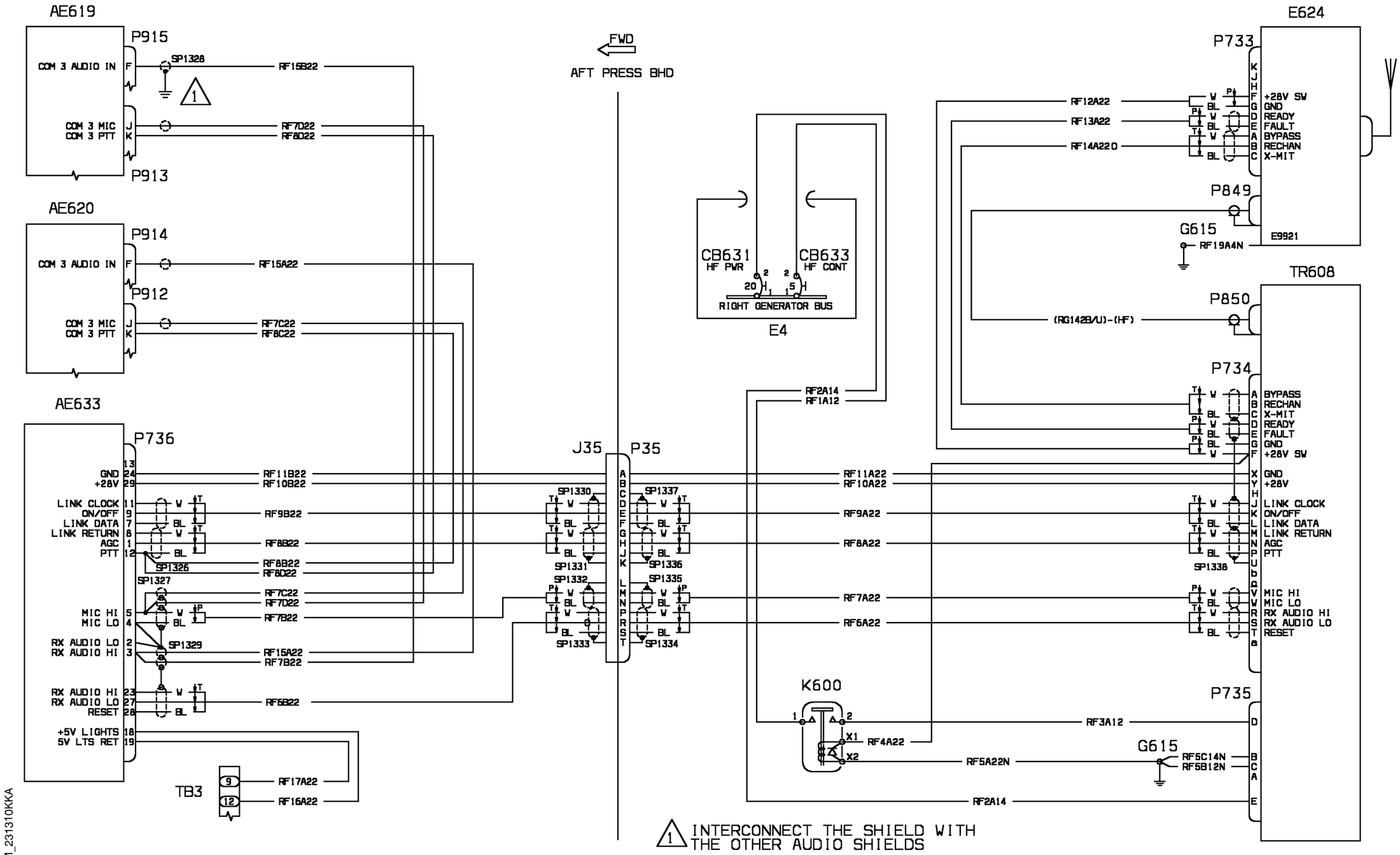


WM_231310KKA

| EFFECTIVITY: | SPEECH COMMUNICATIONS<br>HF (Optional) |
|---|---|

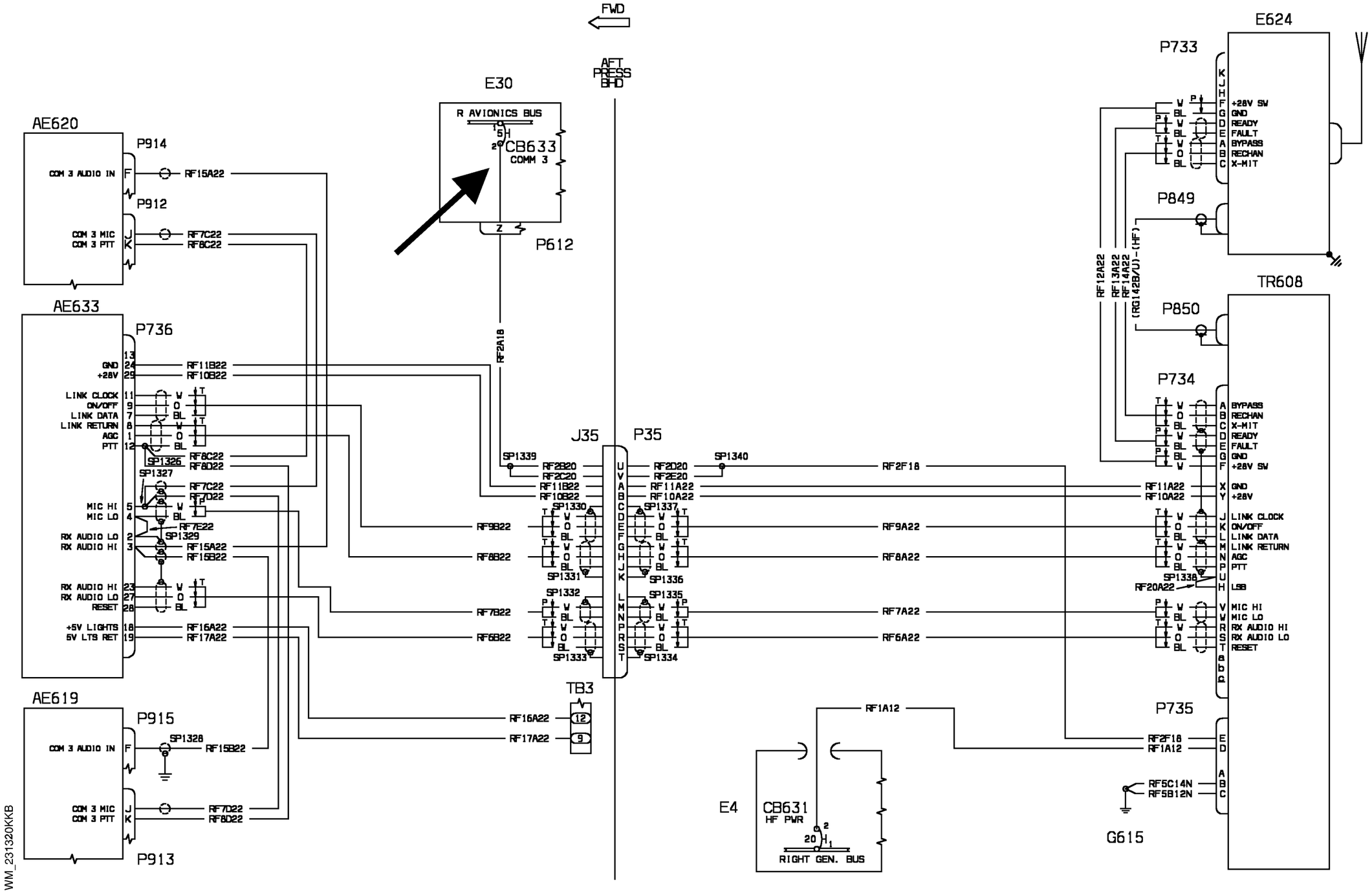


| EFFECTIVITY: | SPEECH COMMUNICATIONS |
|---|---|
| 1026,1027,1031 | HF-LSB, USB |

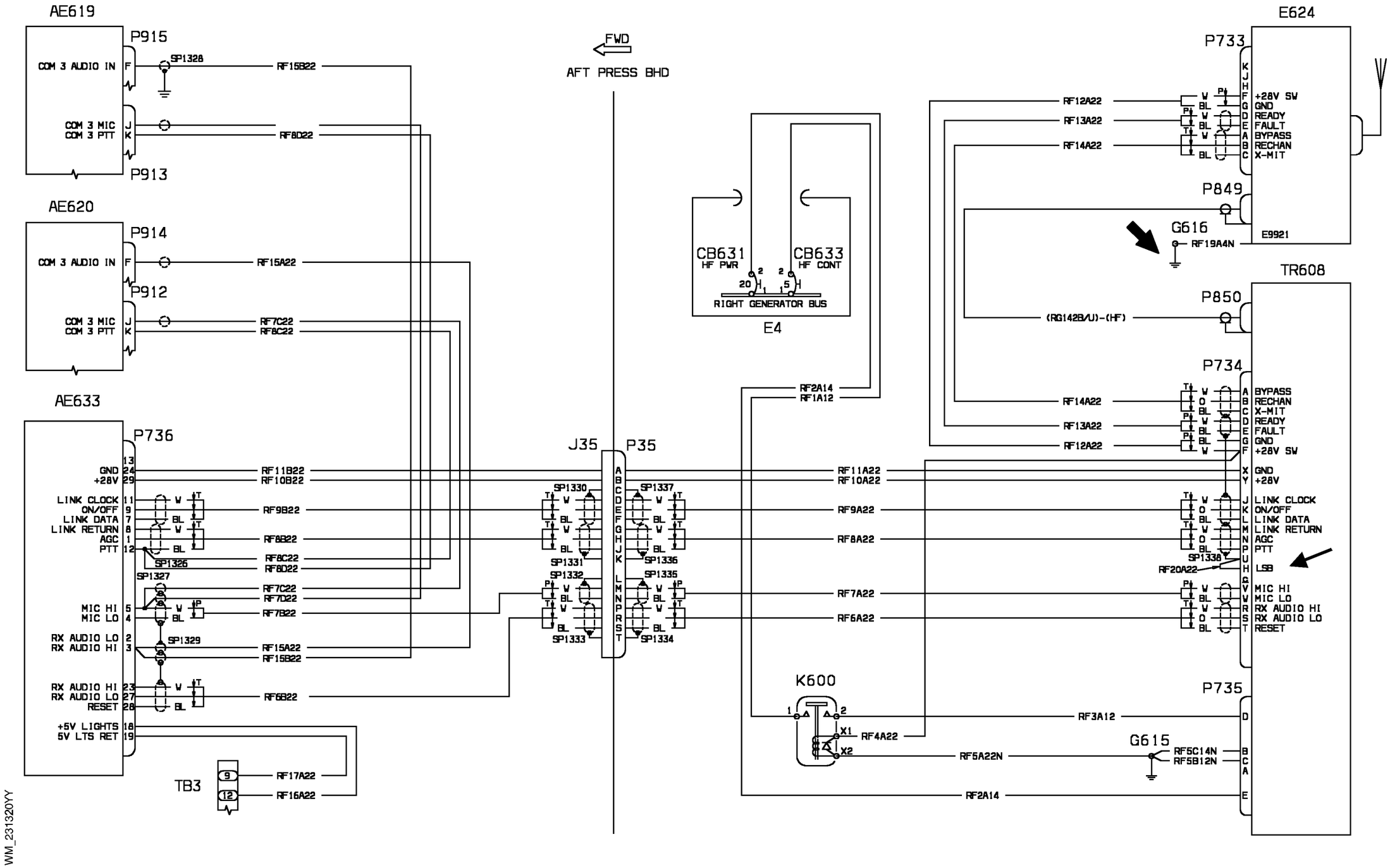


WM_231320YY

| EFFECTIVITY: | SPEECH COMMUNICATIONS<br>HF-LSB, USB (Optional) |
|---|---|

WM_231400KKA1

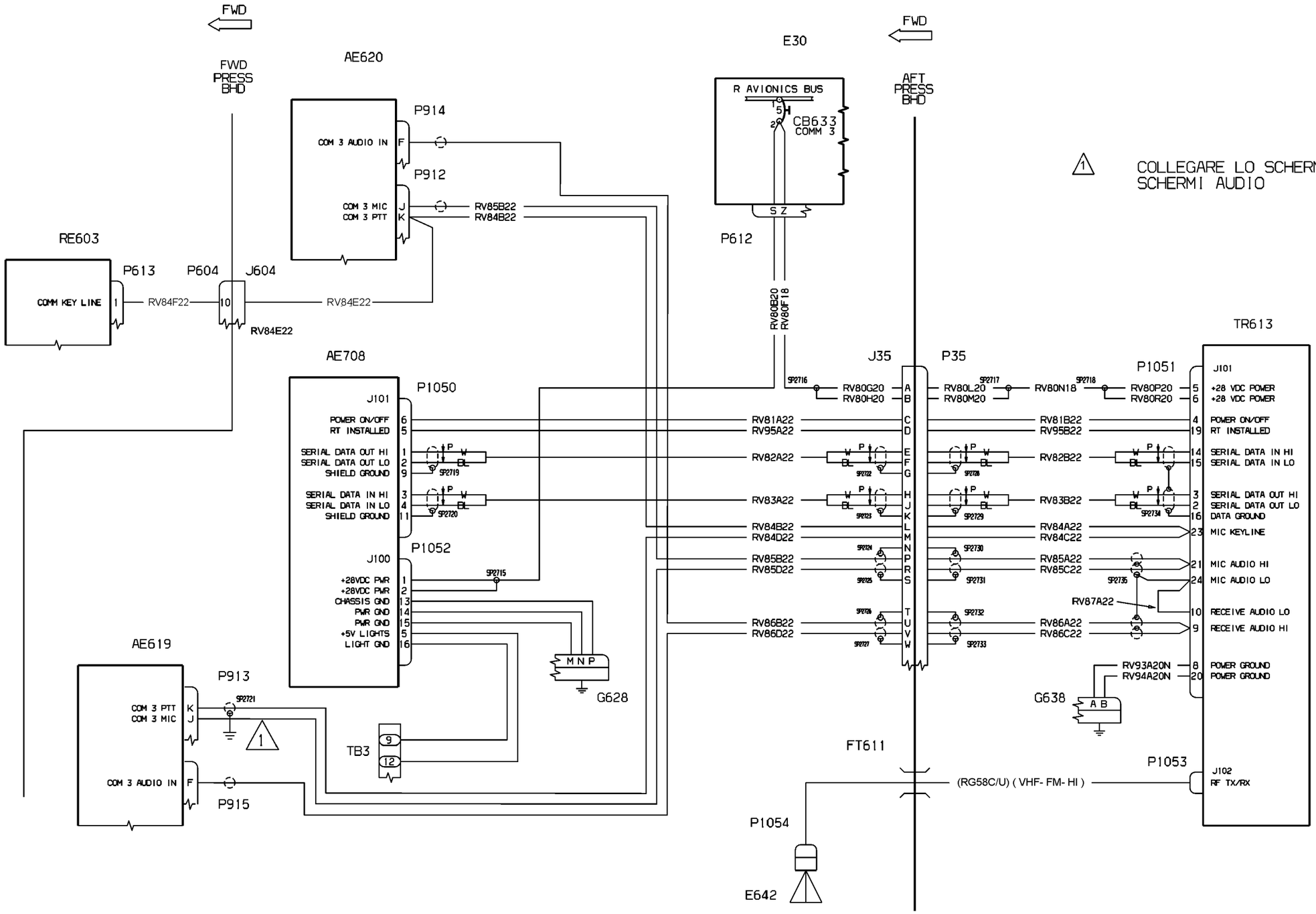


| EFFECTIVITY: | SPEECH COMMUNICATIONS<br>VHF/FM HI Band (Optional) |
|---|---|

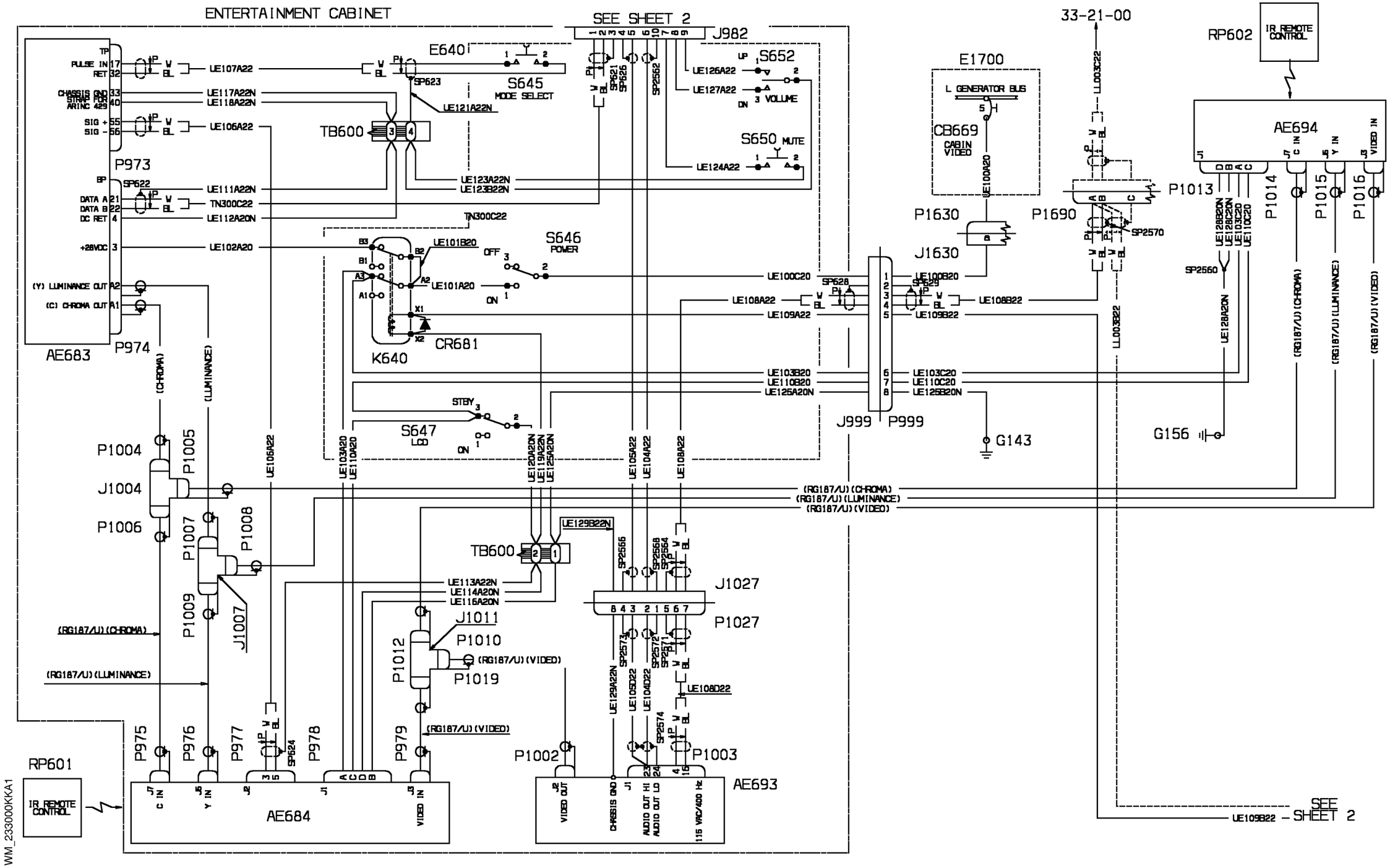


| EFFECTIVITY: | PASSENGER ADDRESS, ENTERTAINMENT AND COMFORT<br>Video VCR (Optional) |
|---|---|

**23-30-00**

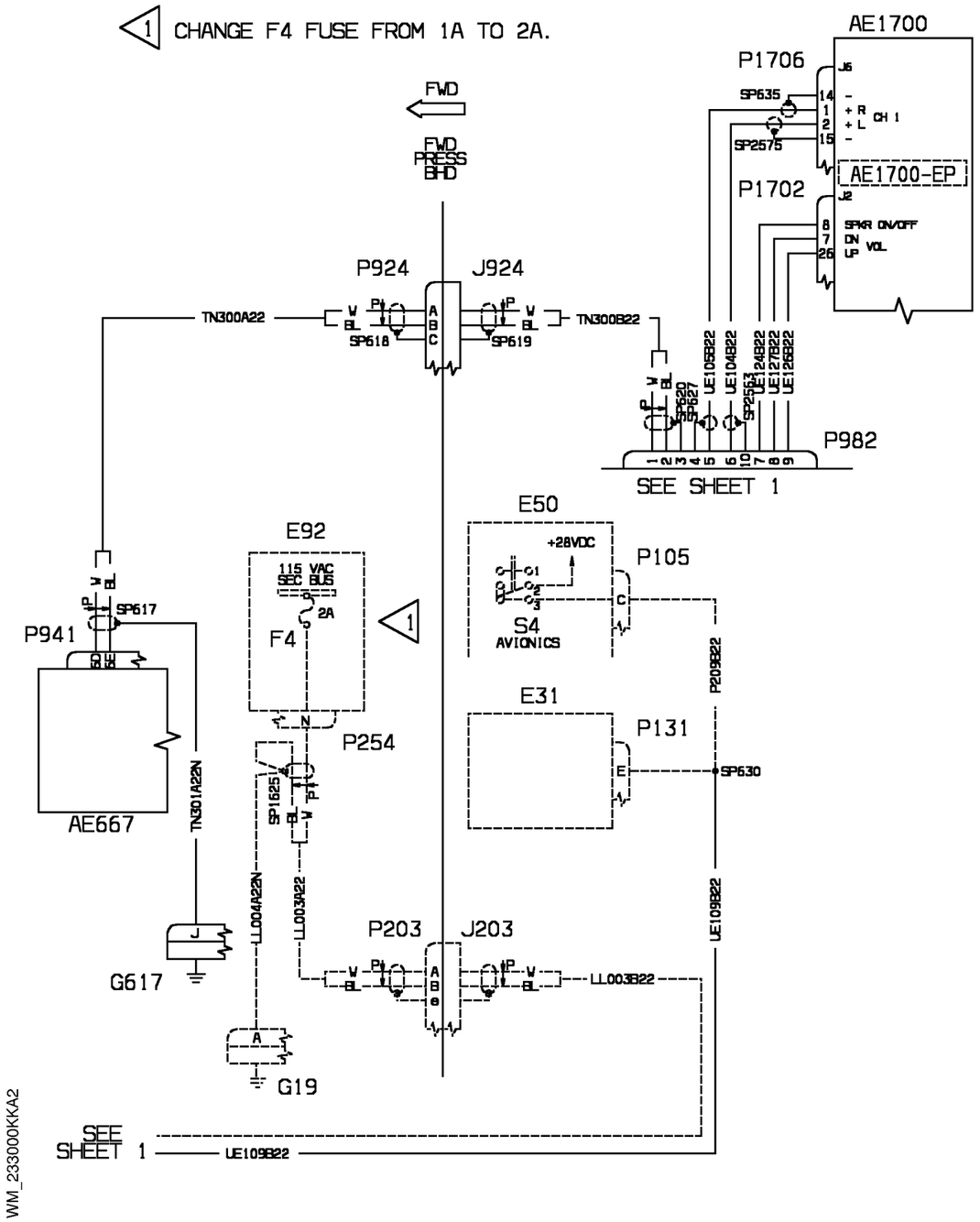


WM_233000KKA2

| EFFECTIVITY: | PASSENGER ADDRESS, ENTERTAINMENT AND COMFORT<br>Video VCR (Optional) |
|---|---|

**23-30-00**

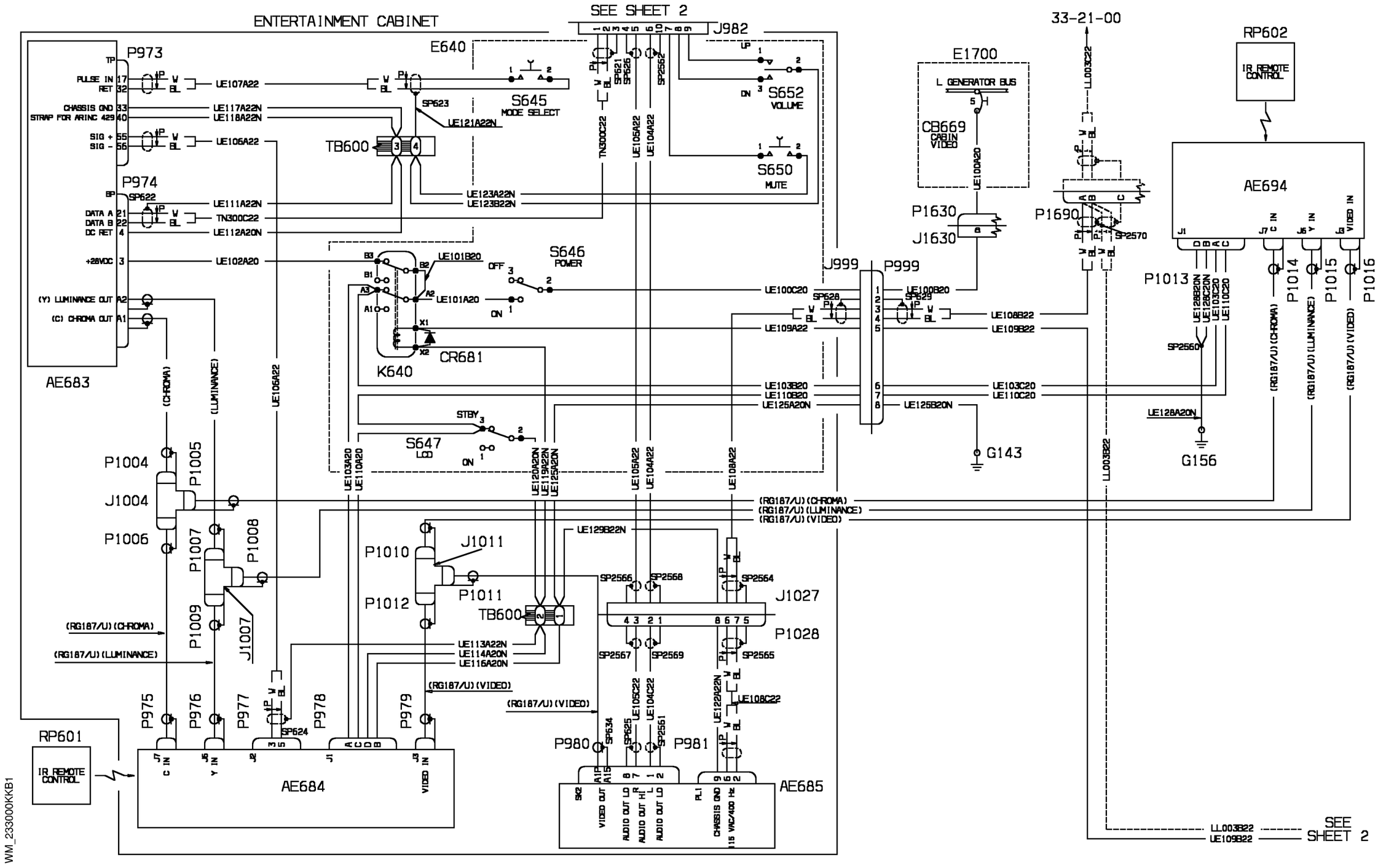


| EFFECTIVITY: | PASSENGER ADDRESS, ENTERTAINMENT AND COMFORT<br>Video MDP (Optional) |
|---|---|

**23-30-00**

1 CHANGE F4 FUSE FROM 1A TO 2A.

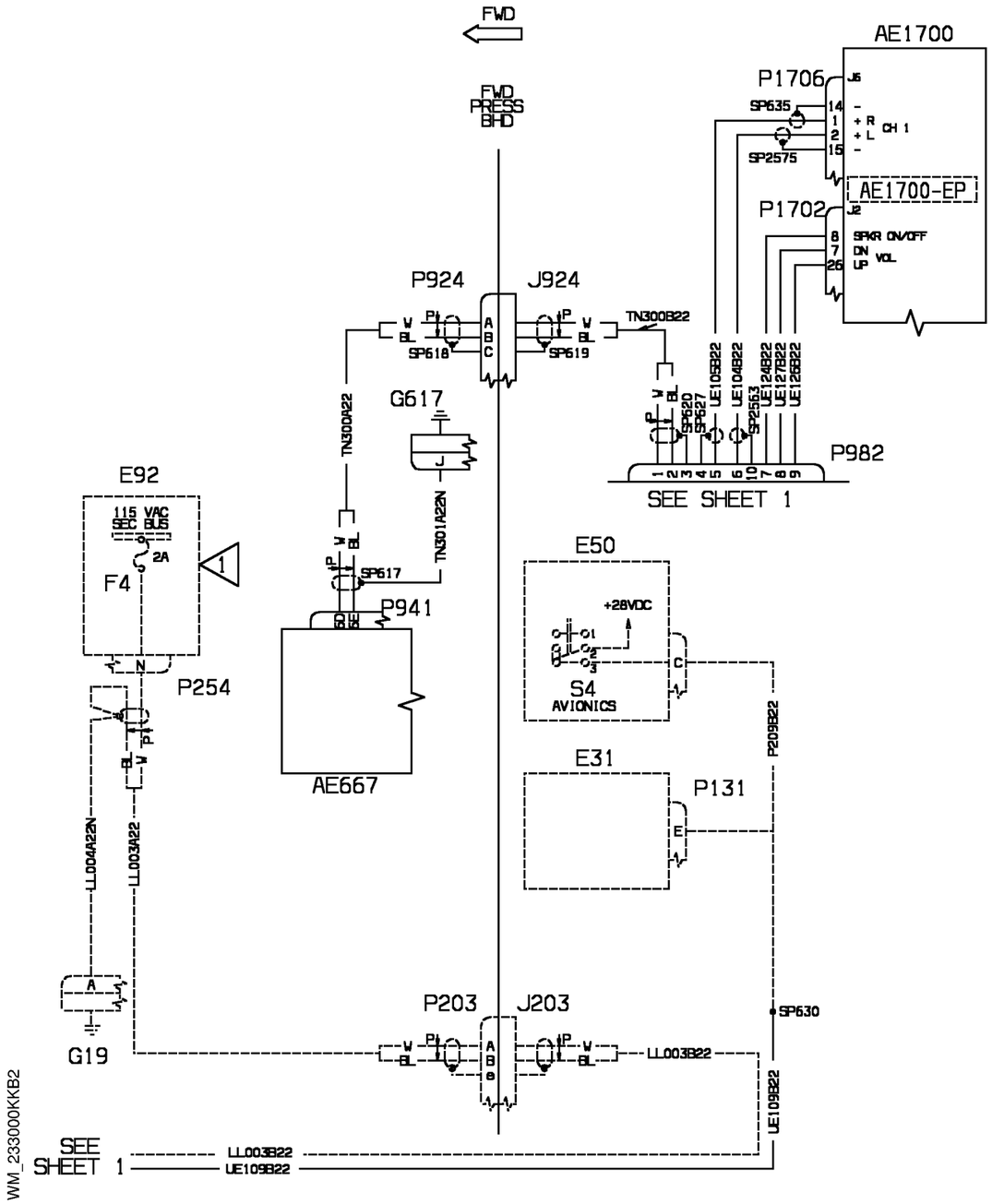


| EFFECTIVITY: | PASSENGER ADDRESS, ENTERTAINMENT AND COMFORT<br>Video MDP (Optional) |
|---|---|

**23-30-00**

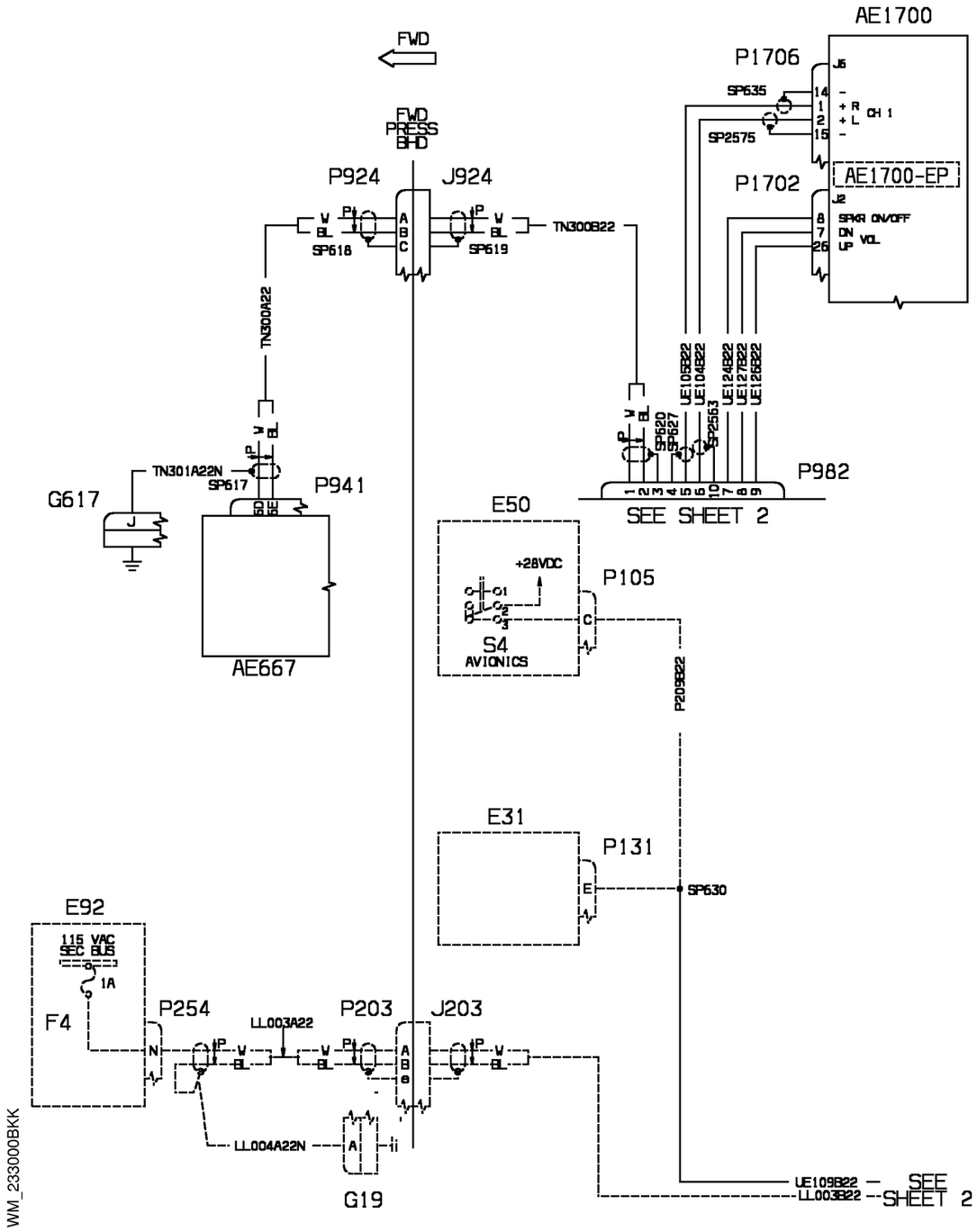


| EFFECTIVITY: | PASSENGER ADDRESS, ENTERTAINMENT AND COMFORT<br>Video Air Show (Optional) |
|---|---|

**23-30-00**

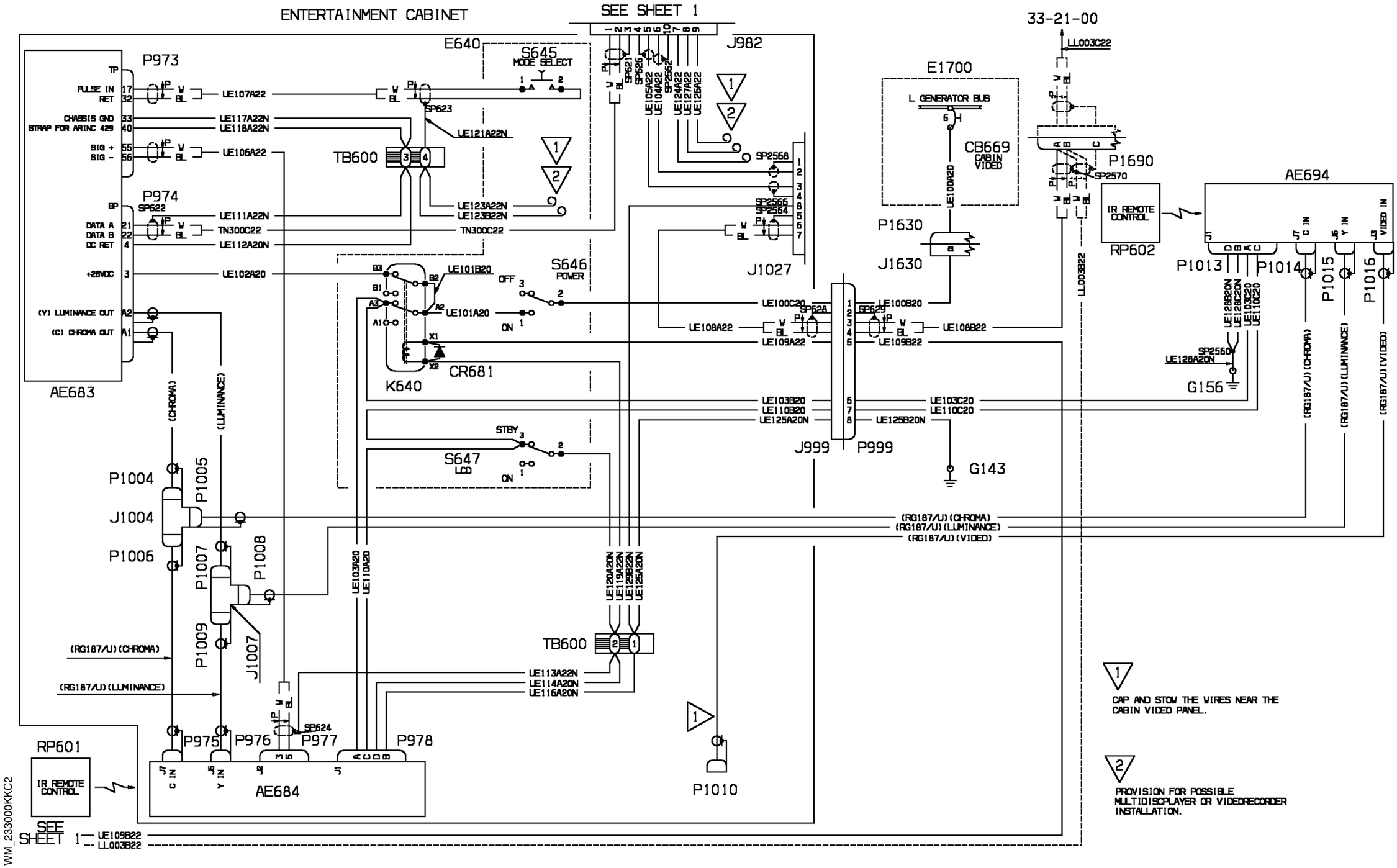


WM_233000KKC2

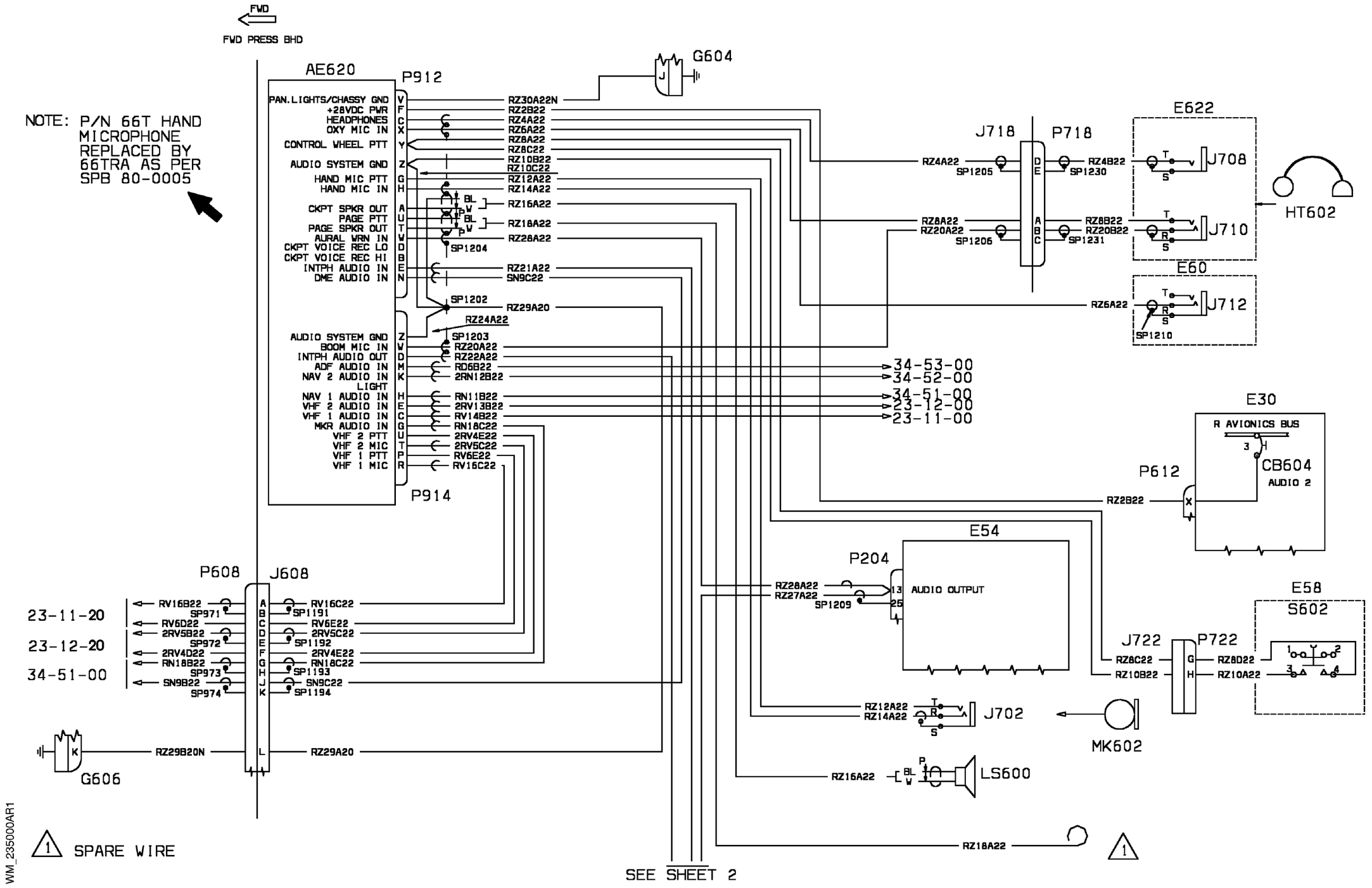


| EFFECTIVITY: 1004-1018 | AUDIO INTEGRATING<br>Audio |
|---|---|

**23-50-00**

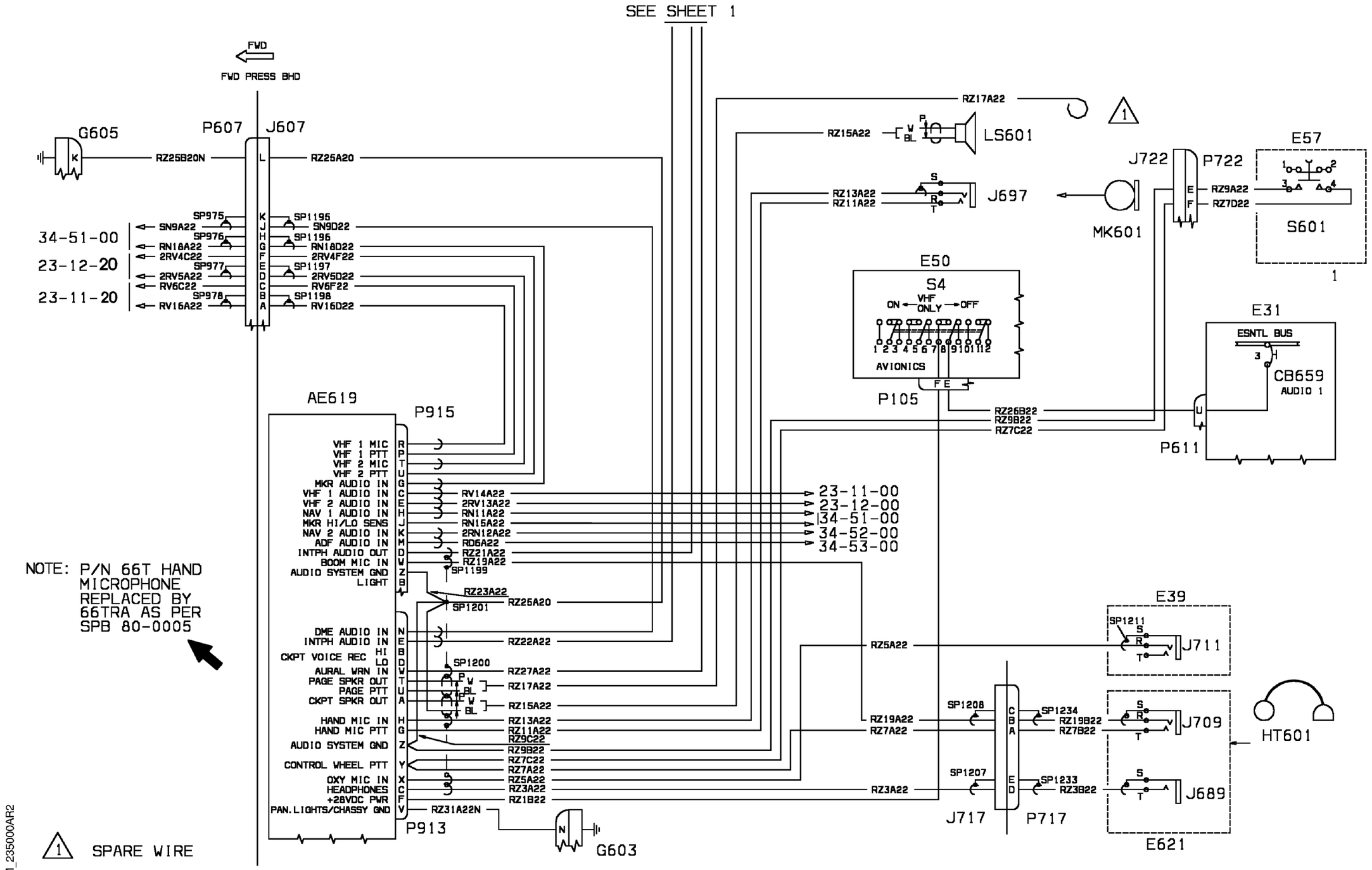


NOTE: P/N 66T HAND MICROPHONE REPLACED BY 66TRA AS PER SPB 80-0005

WM_235000AR2

1 SPARE WIRE

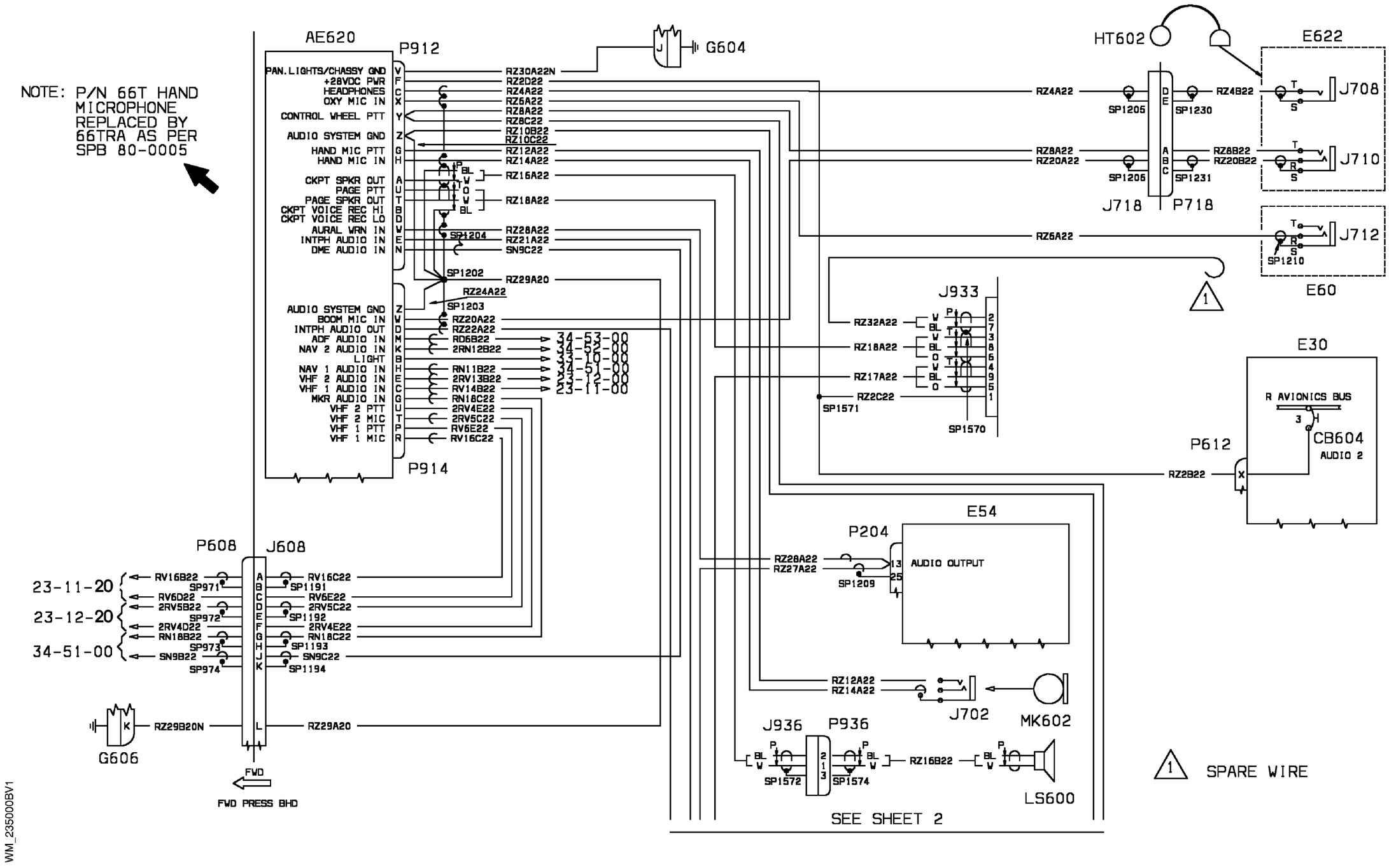


WM_235000BV1

| EFFECTIVITY: 1019-1021 | AUDIO INTEGRATING Audio |
|---|---|

**23-50-00**

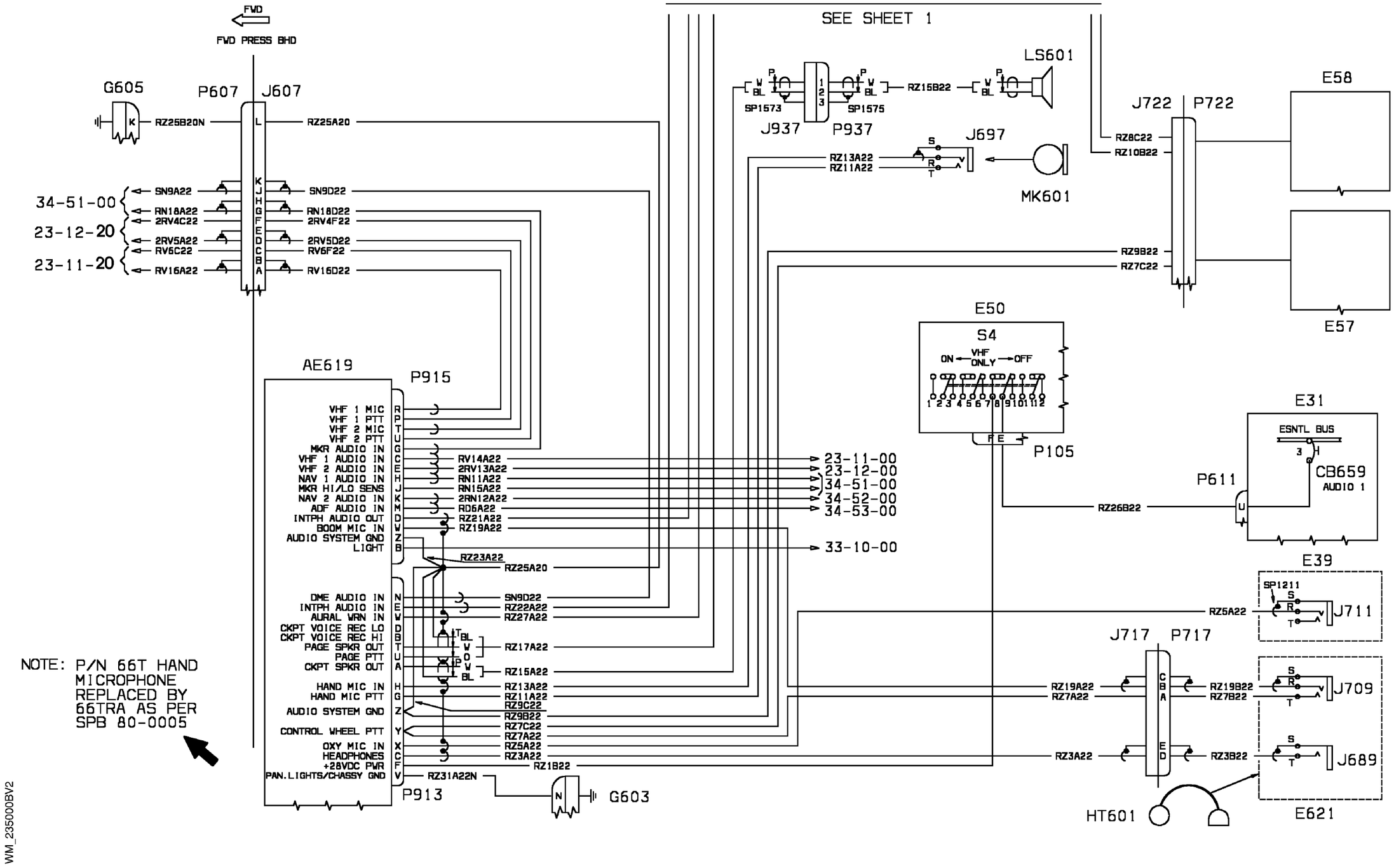
FWD
FWD PRESS BHD
G605
P607
J607
RZ25B20N
RZ25A20
34-51-00
23-12-20
23-11-20
SN9A22
RN18A22
2RV4C22
2RV5A22
RV6C22
RV16A22
SN9D22
RN18D22
2RV4F22
2RV5D22
RV6F22
RV16D22
AE619
P915
VHF 1 MIC
VHF 1 PTT
VHF 2 MIC
VHF 2 PTT
MKR AUDIO IN
VHF 1 AUDIO IN
VHF 2 AUDIO IN
NAV 1 AUDIO IN
MKR HI/LO SENS
NAV 2 AUDIO IN
ADF AUDIO IN
INTPH AUDIO OUT
BOOM MIC IN
AUDIO SYSTEM GND
LIGHT
RV14A22
2RV13A22
RN11A22
RN15A22
2RN12A22
RD6A22
RZ21A22
RZ19A22
RZ23A22
RZ25A20
DME AUDIO IN
INTPH AUDIO IN
AURAL WRN IN
CKPT VOICE REC LO
CKPT VOICE REC HI
PAGE SPKR OUT
PAGE PTT
CKPT SPKR OUT
HAND MIC IN
HAND MIC PTT
AUDIO SYSTEM GND
CONTROL WHEEL PTT
OXY MIC IN
HEADPHONES
+28VDC PWR
PAN.LIGHTS/CHASSY GND
SN9D22
RZ22A22
RZ27A22
RZ17A22
RZ15A22
RZ13A22
RZ11A22
RZ9C22
RZ9B22
RZ7C22
RZ7A22
RZ5A22
RZ3A22
RZ1B22
RZ31A22N
P913
G603
SEE SHEET 1
LS601
SP1573
SP1575
J937
P937
RZ15B22
J697
MK601
RZ13A22
RZ11A22
J722
P722
RZ8C22
RZ10B22
RZ9B22
RZ7C22
E58
E57
E50
S4
ON
VHF ONLY
OFF
P105
23-11-00
23-12-00
34-51-00
34-52-00
34-53-00
33-10-00
E31
ESNTL BUS
CB659
AUDIO 1
P611
RZ26B22
E39
SP1211
J711
RZ5A22
J717
P717
RZ19A22
RZ7A22
RZ19B22
RZ7B22
J709
RZ3A22
RZ3B22
J689
HT601
E621
NOTE: P/N 66T HAND MICROPHONE REPLACED BY 66TRA AS PER SPB 80-0005
WM_235000BV2

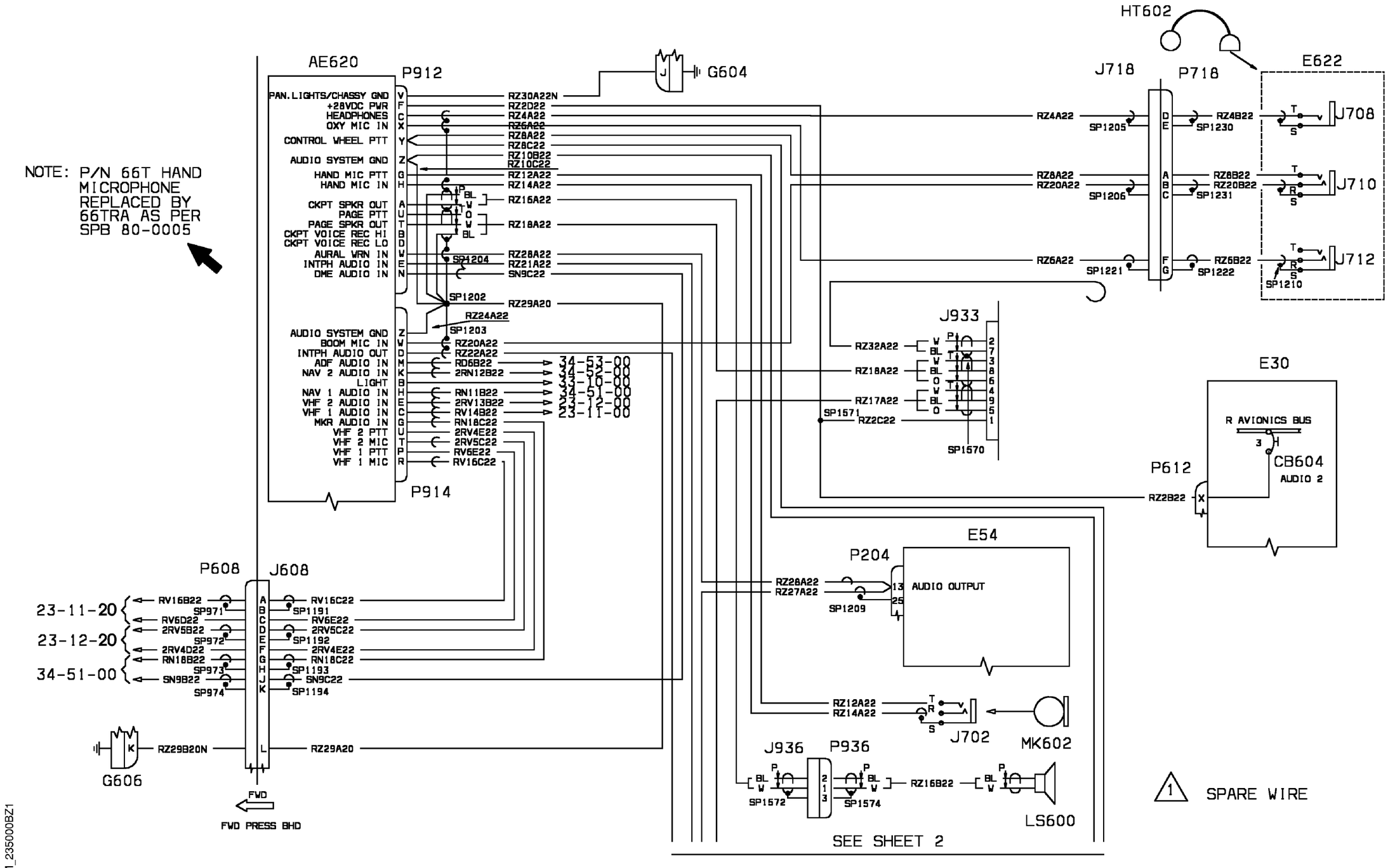


WM_235000BZ1

| EFFECTIVITY: 1022-1104 | AUDIO INTEGRATING Audio |
|---|---|

**23-50-00**

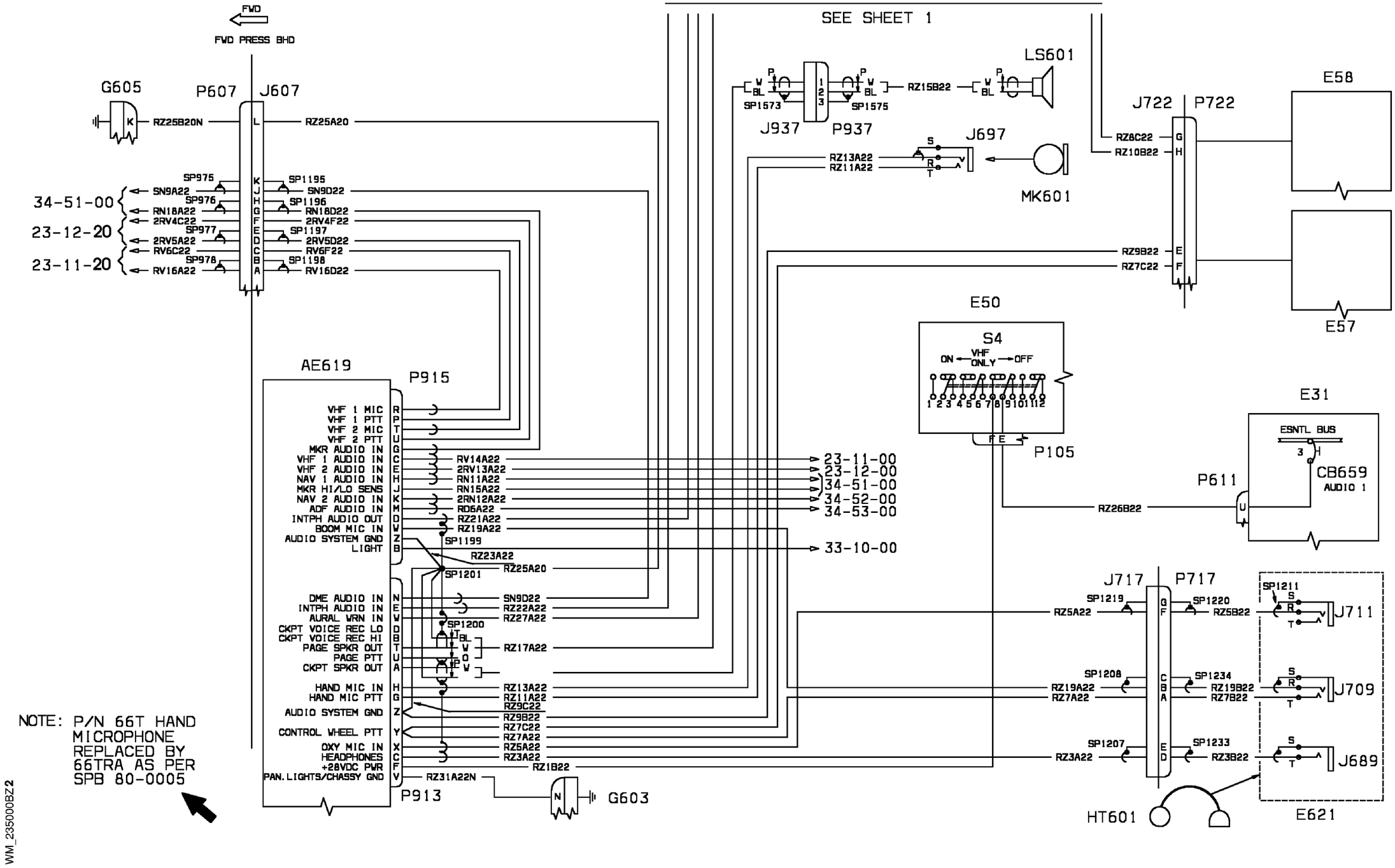


NOTE: P/N 66T HAND MICROPHONE REPLACED BY 66TRA AS PER SPB 80-0005

WM_235000BZ2

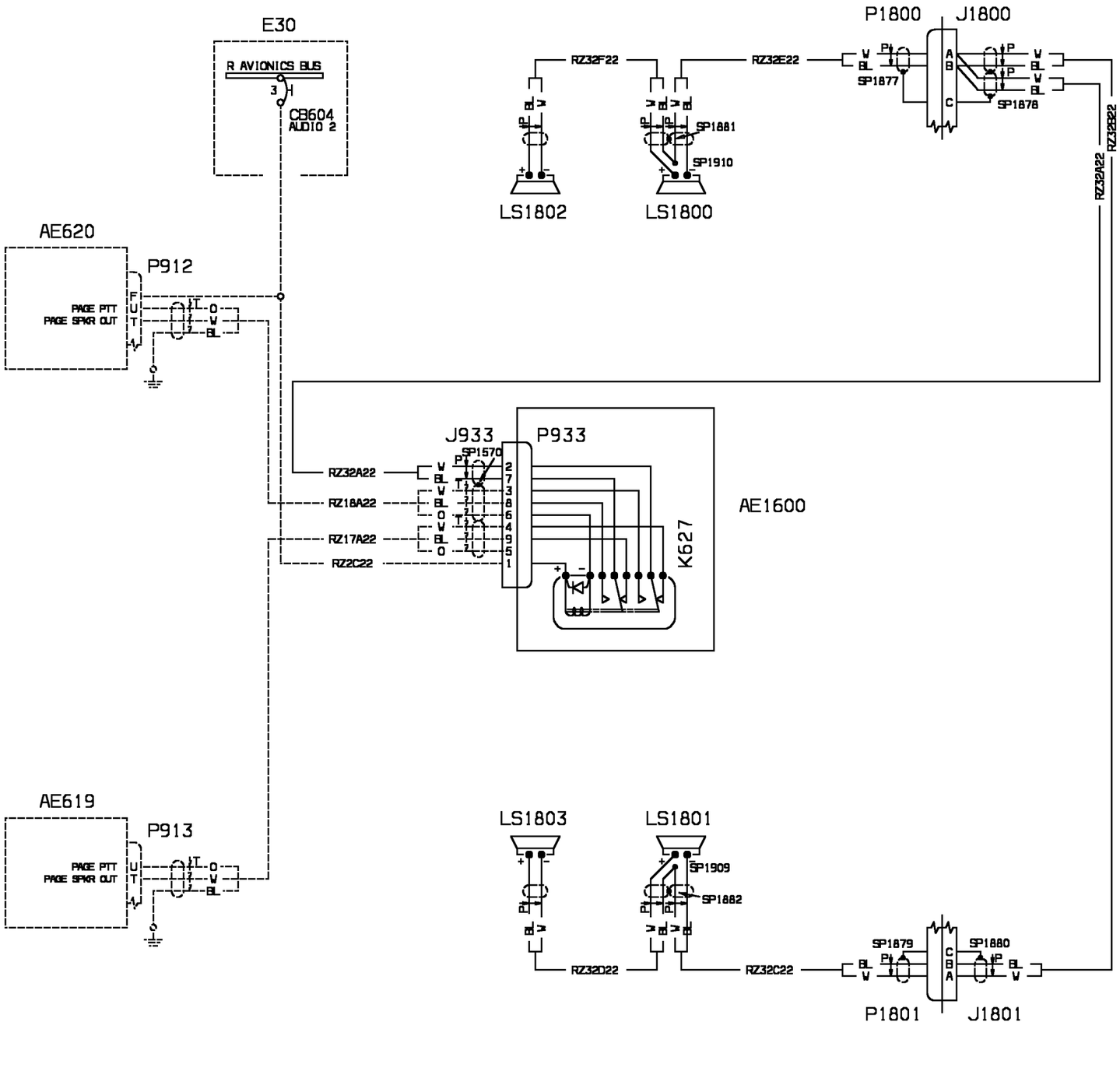


NOTE: AIRPLANES WITH
OPTIONS 1-2-8-10-19
CABIN ARRANGEMENTS

WM_235100KA

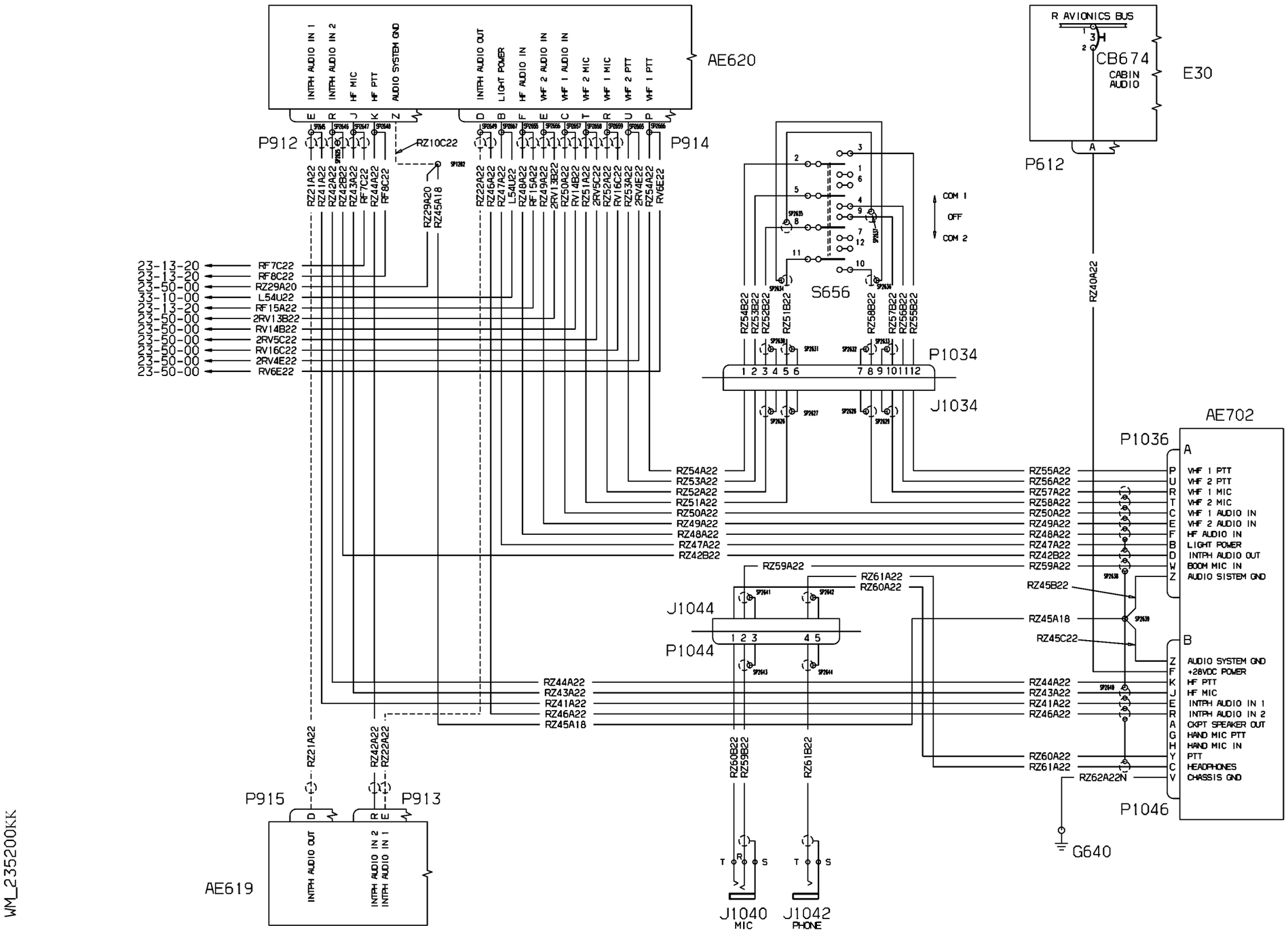


WM_235200KK

| EFFECTIVITY: | AUDIO INTEGRATING<br>Audio 3rd Position (Opt.) |
|---|---|

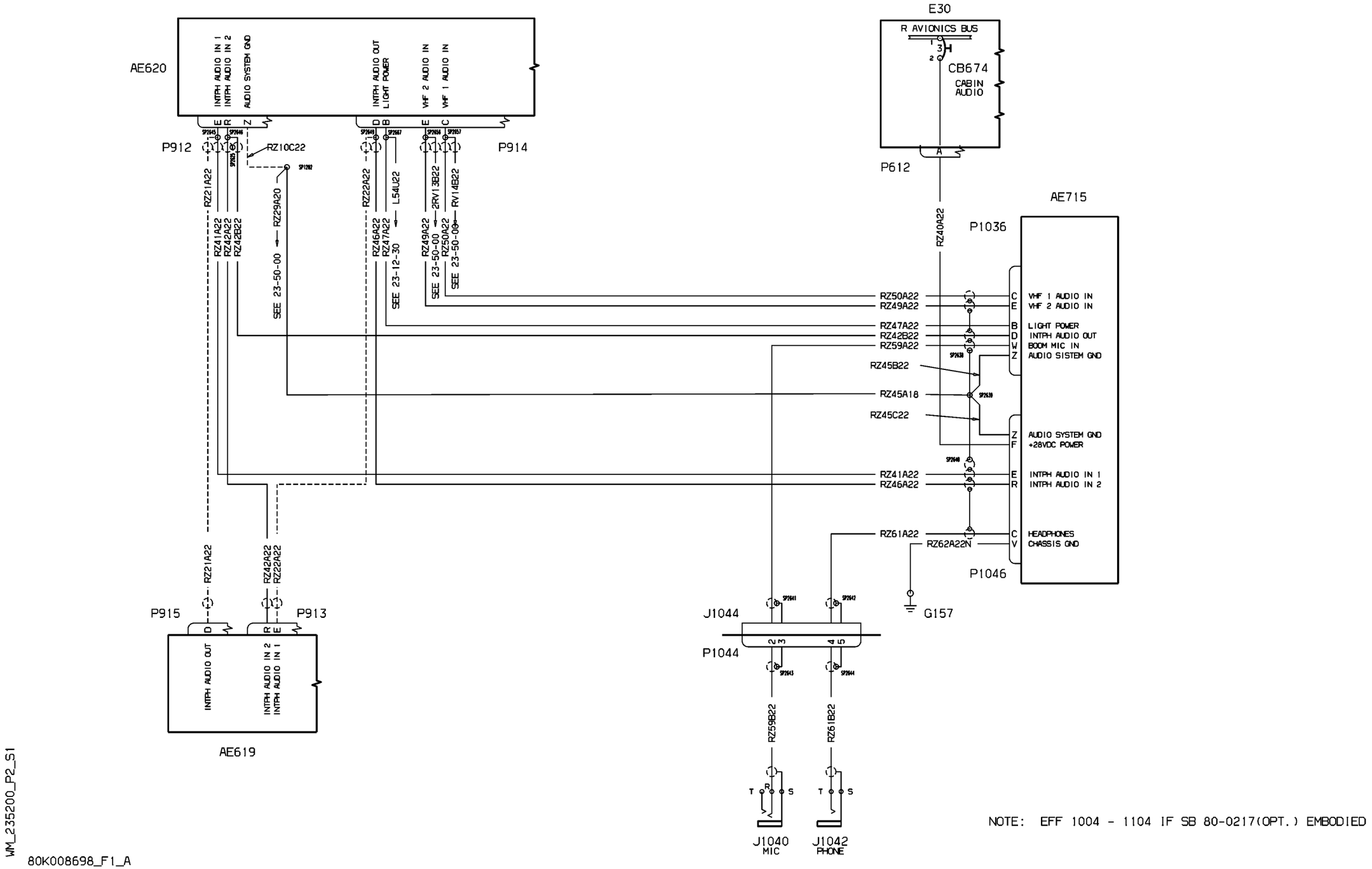


WM_235200_P2_S1

80K008698_F1_A

WM_237000_P1_S1

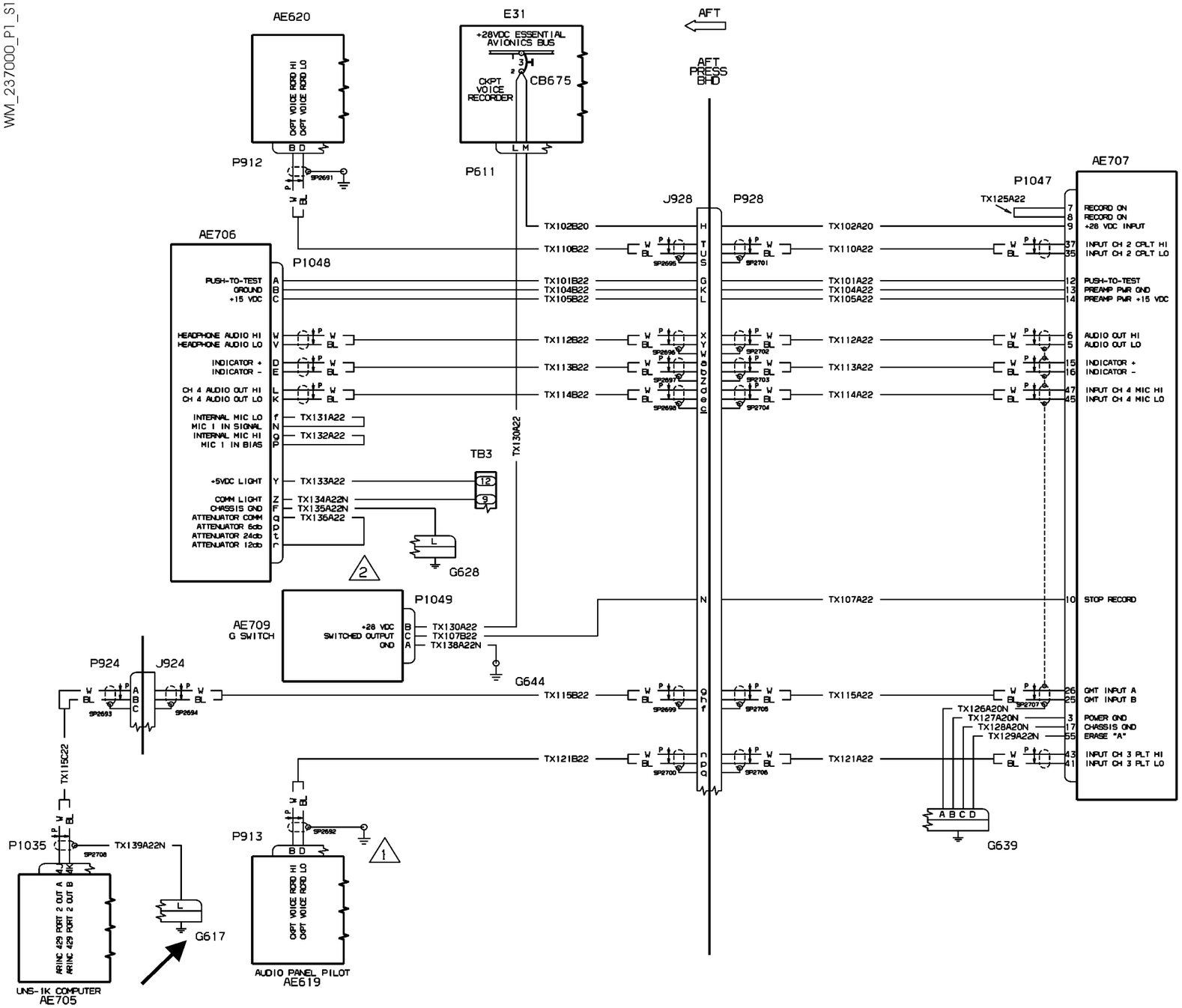


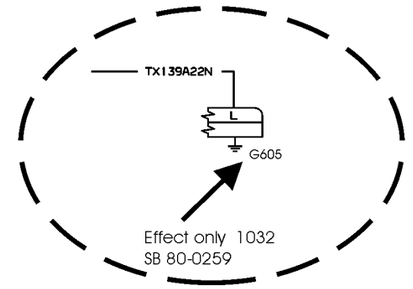


80k008666_1/A

| EFFECTIVITY: | AUDIO & VIDEO MONITORING<br>Cockpit Voice Recorder (Optional) |
|---|---|

CHAPTER 24 - ELECTRICAL POWER
LIST OF EFFECTIVE PAGES

| CHAPTER SECTION SUBJECT | PAGE | SHEET | DATE |
|---|---|---|---|
| 24 - LOEP | 1 | | Mar. 19/12 |
| | 2 | | Mar. 19/12 |
| 24 - TOC | 1 | | Mar. 19/12 |
| | 2 | | Mar. 19/12 |
| 24-20-00 | 1 | | Oct. 30/09 |
| 24-30-00 | 1 | 1 | Oct. 30/09 |
| 24-30-00 | 1 | 2 | Oct. 30/09 |
| 24-30-00 | 1 | 3 | Mar. 19/12 |
| 24-30-00 | 2 | 1 | Oct. 30/09 |
| 24-30-00 | 2 | 2 | Oct. 30/09 |
| 24-30-00 | 2 | 3 | Mar. 19/12 |
| 24-30-00 | 101 | | Oct. 30/09 |
| 24-30-00 | 102 | | Oct. 30/09 |
| 24-31-00 | 1 | | Oct. 30/09 |
| 24-61-00 | 1 | | Oct. 30/09 |
| 24-61-00 | 2 | | Oct. 30/09 |
| 24-61-00 | 101 | 1 | Oct. 30/09 |
| 24-61-00 | 101 | 2 | Oct. 30/09 |
| 24-62-10 | 1 | | Oct. 30/09 |
| 24-62-10 | 2 | | Oct. 30/09 |
| 24-62-10 | 3 | | Oct. 30/09 |
| 24-62-20 | 1 | | Oct. 30/09 |
| 24-62-20 | 2 | | Oct. 30/09 |
| 24-62-30 | 1 | | Oct. 30/09 |
| 24-62-40 | 1 | | June 30/10 |
| 24-62-40 | 2 | | Mar. 19/12 |
| 24-62-50 | 1 | | Oct. 30/09 |
| 24-62-60 | 1 | | Oct. 30/09 |
| 24-63-00 | 1 | | Oct. 30/09 |
| 24-63-00 | 2 | | Oct. 30/09 |
| 24-63-00 | 3 | | Oct. 30/09 |
| 24-63-00 | 4 | | Oct. 30/09 |
| 24-63-00 | 5 | | Oct. 30/09 |
| 24-64-00 | 1 | | Oct. 30/09 |
| 24-64-00 | 2 | | Oct. 30/09 |
| 24-64-00 | 3 | | Oct. 30/09 |

INTENTIONALLY LEFT BLANK

CHAPTER 24 - ELECTRICAL POWER
TABLE OF CONTENTS


| SUBJECT | CHAPTER SECTION SUBJECT | PAGE | SHEET |
|---|---|---|---|
| AC GENERATION | | | |
| AC Power | 24-20-00 | 1 | |
| DC GENERATION | | | |
| DC Power And Start | 24-30-00 | 1 | 1 |
| DC Power And Start | 24-30-00 | 1 | 2 |
| DC Power And Start | 24-30-00 | 1 | 3 |
| DC Power And Start | 24-30-00 | 2 | 1 |
| DC Power And Start | 24-30-00 | 2 | 2 |
| DC Power And Start | 24-30-00 | 2 | 3 |
| DC Power And Start | 24-30-00 | 101 | |
| DC Power And Start | 24-30-00 | 102 | |
| Protection Overvoltage (Optional) | 24-31-00 | 1 | |
| DC ELECTRICAL LOAD DISTRIBUTION | | | |
| Electrical Load Distribution | 24-61-00 | 1 | |
| Electrical Load Distribution | 24-61-00 | 2 | |
| Electrical Load Distribution | 24-61-00 | 101 | 1 |
| Electrical Load Distribution | 24-61-00 | 101 | 2 |
| Electrical Load Distribution. (Opt 1) | 24-62-10 | 1 | |
| Electrical Load Distribution. (Opt 1) | 24-62-10 | 2 | |
| Electrical Load Distribution. (Opt 1 & 10 MM) | 24-62-10 | 3 | |
| Electrical Load Dist. (Opt 2 & 19) | 24-62-20 | 1 | |
| Electrical Load Dist. (Opt 2 & 19) | 24-62-20 | 2 | |
| Electrical Load Distribution (Opt 5 - 8) | 24-62-30 | 1 | |
| Electrical Load Distribution (Opt 10) | 24-62-40 | 1 | |
| Electrical Load Distribution (Opt 10) | 24-62-40 | 2 | |
| Electrical Load Distribution (Opt.20) | 24-62-50 | 1 | |
| Electrical Load Distribution (Opt.17) | 24-62-60 | 1 | |
| Aux. Power 1,2 (Opt) | 24-63-00 | 1 | |
| Aux. Power 3 (Opt) | 24-63-00 | 2 | |
| Stretchers (Opt) | 24-63-00 | 3 | |
| 14VDC Aux. Power (Optional) | 24-63-00 | 4 | |
| 28VDC Aux. Power (Optional) | 24-63-00 | 5 | |
| Emergency Power Bus | 24-64-00 | 1 | |
| Emergency Power Bus | 24-64-00 | 2 | |
| Emergency Power Bus | 24-64-00 | 3 | |

INTENTIONALLY LEFT BLANK

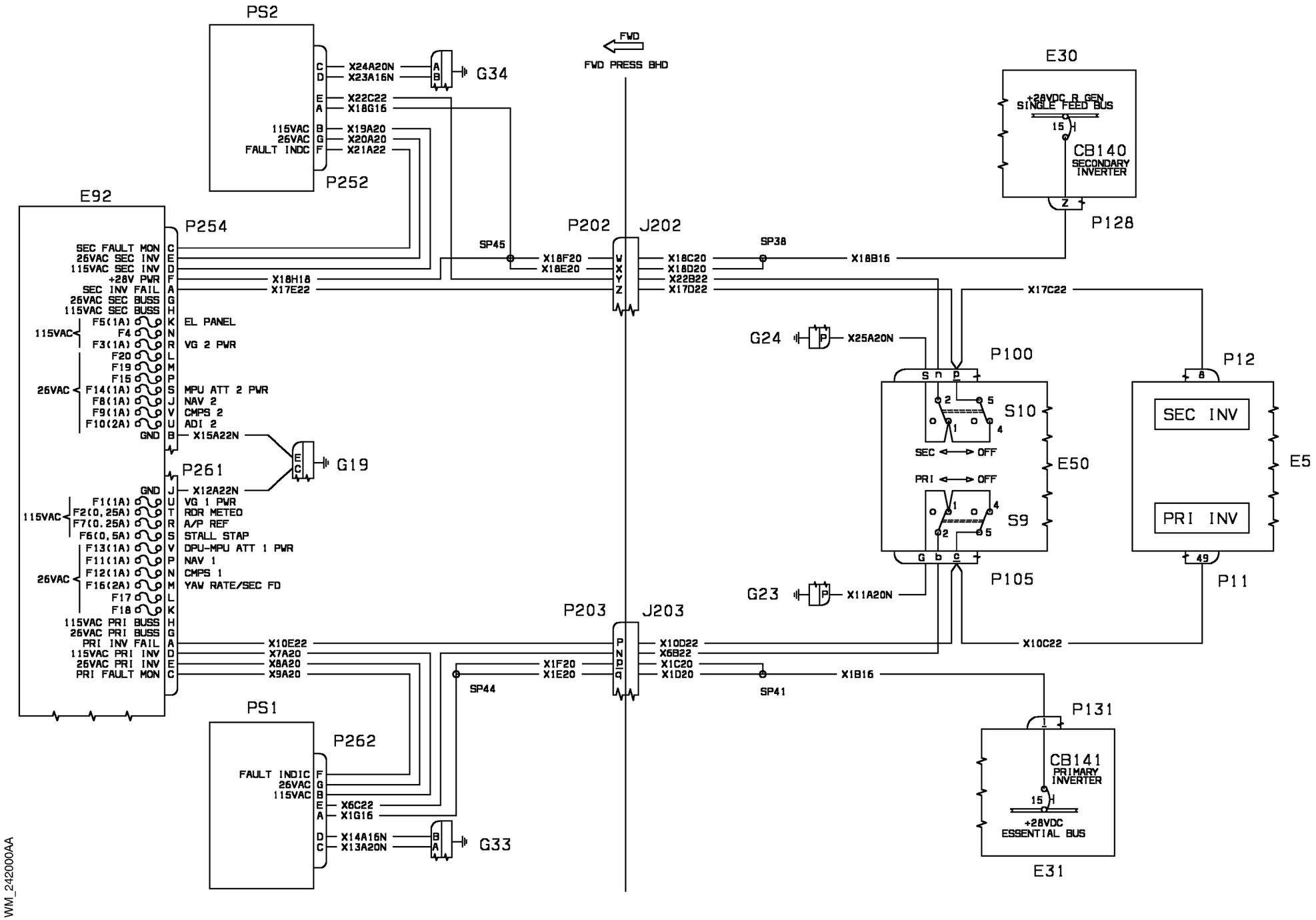


| EFFECTIVITY: | AC GENERATION<br>AC Power |
|---|---|

**24-20-00**

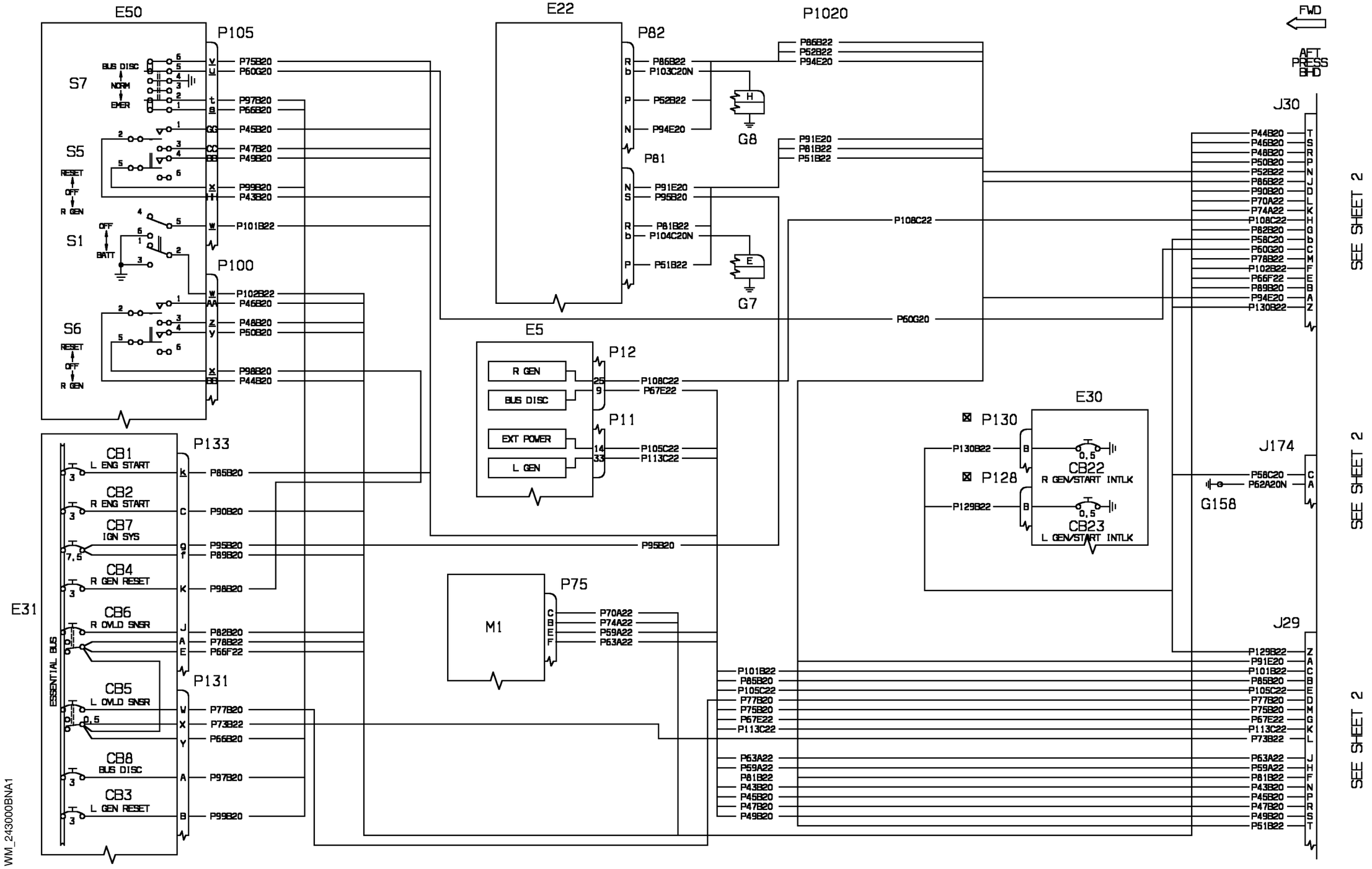


| EFFECTIVITY: | DC GENERATION |
|---|---|
| 1004-1033 | DC Power And Start |

**24-30-00**

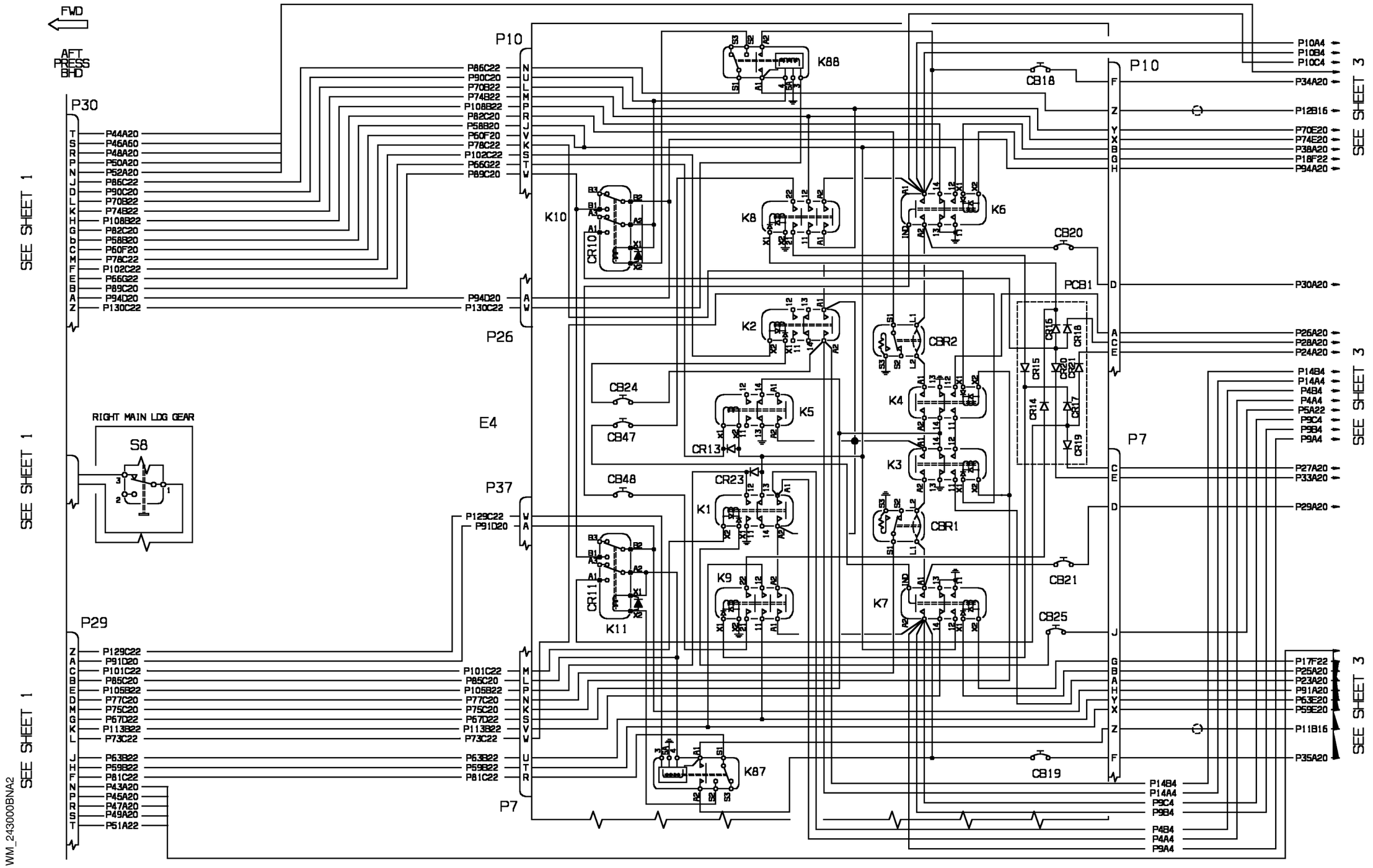


WM_243000BNA2

| EFFECTIVITY: | DC GENERATION |
|---|---|
| 1004-1033 | DC Power And Start |

**24-30-00**

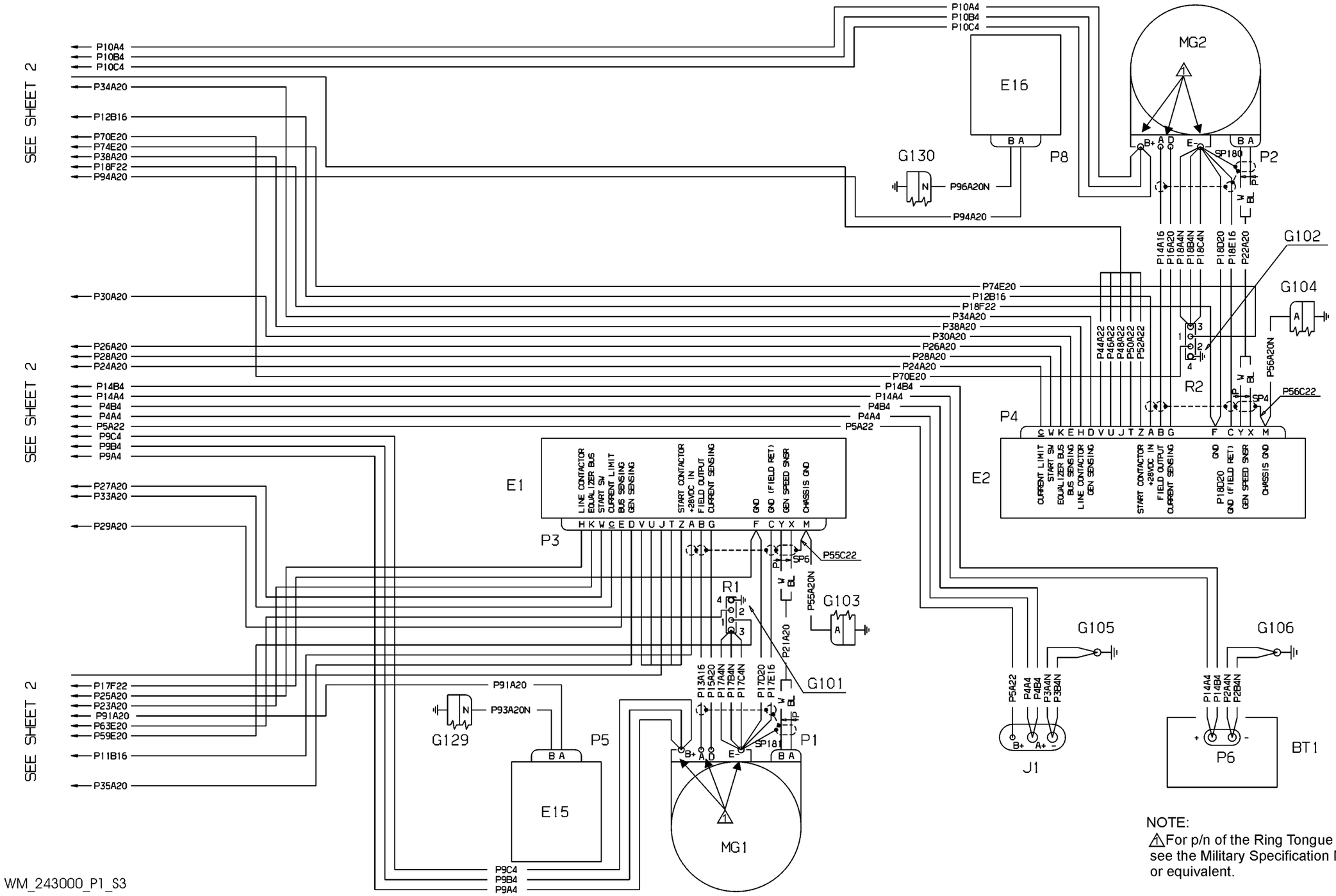


WM_243000_P1_S3

NOTE:
⚠1 For p/n of the Ring Tongue Terminal see the Military Specification MS25036 or equivalent.

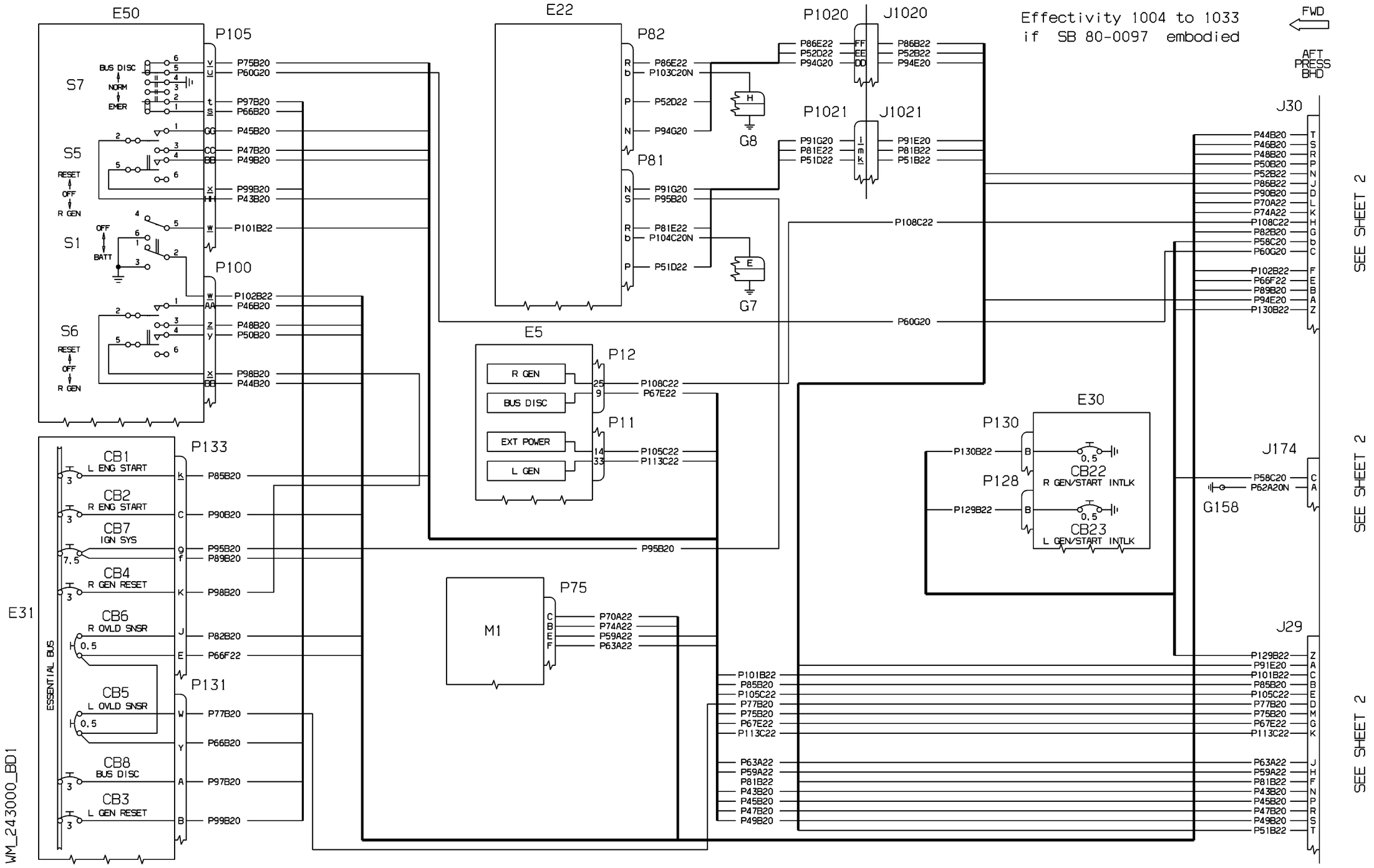
E50
P105
S7
BUS DISC
NORM
EMER
P75B20
P60G20
P97B20
P66B20
S5
RESET
OFF
R GEN
P45B20
P47B20
P49B20
P99B20
P43B20
S1
OFF
BATT
P101B22
P100
S6
P102B22
P46B20
P48B20
P50B20
P98B20
P44B20
E22
P82
P86E22
P103C20N
P52D22
P94G20
H
G8
P81
P91G20
P95B20
P81E22
P104C20N
P51D22
E
G7
P1020
J1020
P86E22
P52D22
P94G20
FF
EE
DD
P86B22
P52B22
P94E20
P1021
J1021
P91G20
P81E22
P51D22
P91E20
P81B22
P51B22
Effectivity 1004 to 1033
if SB 80-0097 embodied
FWD
AFT
PRESS
BHD
J30
P44B20
P46B20
P48B20
P50B20
P52B22
P86B22
P90B20
P70A22
P74A22
P108C22
P82B20
P58C20
P60G20
P102B22
P66F22
P89B20
P94E20
P130B22
SEE SHEET 2
P108C22
P60G20
E5
P12
R GEN
BUS DISC
EXT POWER
L GEN
P108C22
P67E22
P11
P105C22
P113C22
E30
P130
P130B22
P128
P129B22
0.5
CB22
R GEN/START INTLK
CB23
L GEN/START INTLK
J174
P58C20
P62A20N
G158
P95B20
P133
CB1
L ENG START
CB2
R ENG START
CB7
IGN SYS
CB4
R GEN RESET
CB6
R OVLD SNSR
CB5
L OVLD SNSR
CB8
BUS DISC
CB3
L GEN RESET
P85B20
P90B20
P95B20
P89B20
P98B20
P82B20
P66F22
P131
P77B20
P66B20
P97B20
P99B20
E31
ESSENTIAL BUS
M1
P75
P70A22
P74A22
P59A22
P63A22
J29
P129B22
P91E20
P101B22
P85B20
P105C22
P77B20
P75B20
P67E22
P113C22
P63A22
P59A22
P81B22
P43B20
P45B20
P47B20
P49B20
P51B22
SEE SHEET 2
SEE SHEET 2
WM_243000_BD1

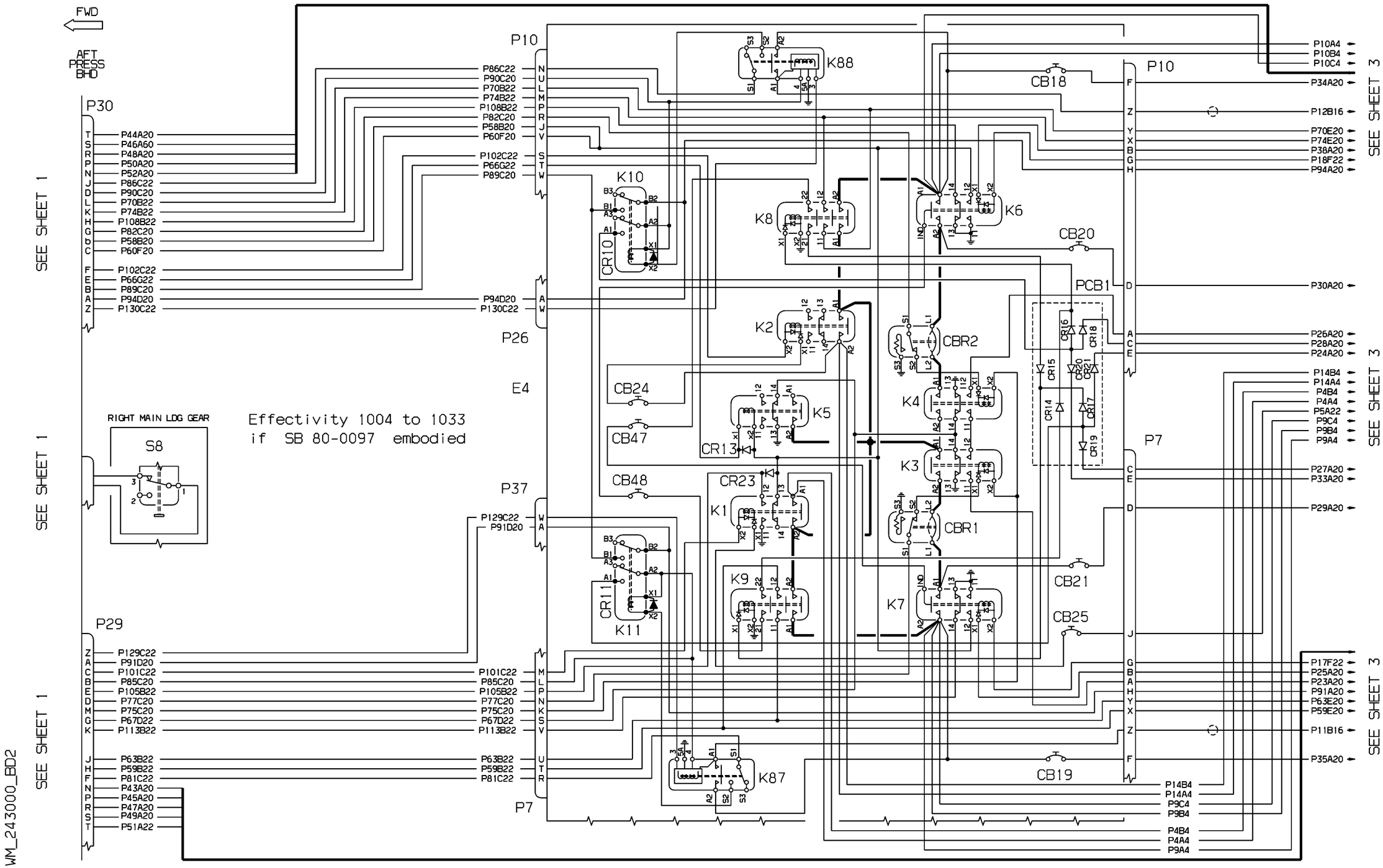
FWD
AFT PRESS BHD
P30
P10
P26
P37
P29
P7
E4
SEE SHEET 1
SEE SHEET 3
RIGHT MAIN LDG GEAR
S8
Effectivity 1004 to 1033
if SB 80-0097 embodied
K10
K8
K6
K2
CBR2
K4
K5
K3
CBR1
K1
K9
K7
K11
K87
K88
CR10
CR11
CR13
CR23
CB18
CB20
CB21
CB24
CB25
CB47
CB48
CB19
PCB1
CR14
CR15
CR16
CR17
CR18
CR19
CR20
CR21
P44A20
P46A60
P48A20
P50A20
P52A20
P86C22
P90C20
P70B22
P74B22
P108B22
P82C20
P58B20
P60F20
P102C22
P66G22
P89C20
P94D20
P130C22
P129C22
P91D20
P101C22
P85C20
P105B22
P77C20
P75C20
P67D22
P113B22
P63B22
P59B22
P81C22
P43A20
P45A20
P47A20
P49A20
P51A22
P10A4
P10B4
P10C4
P34A20
P12B16
P70E20
P74E20
P38A20
P18F22
P94A20
P30A20
P26A20
P28A20
P24A20
P14B4
P14A4
P4B4
P4A4
P5A22
P9C4
P9B4
P9A4
P27A20
P33A20
P29A20
P17F22
P25A20
P23A20
P91A20
P63E20
P59E20
P11B16
P35A20
WM_243000_BD2

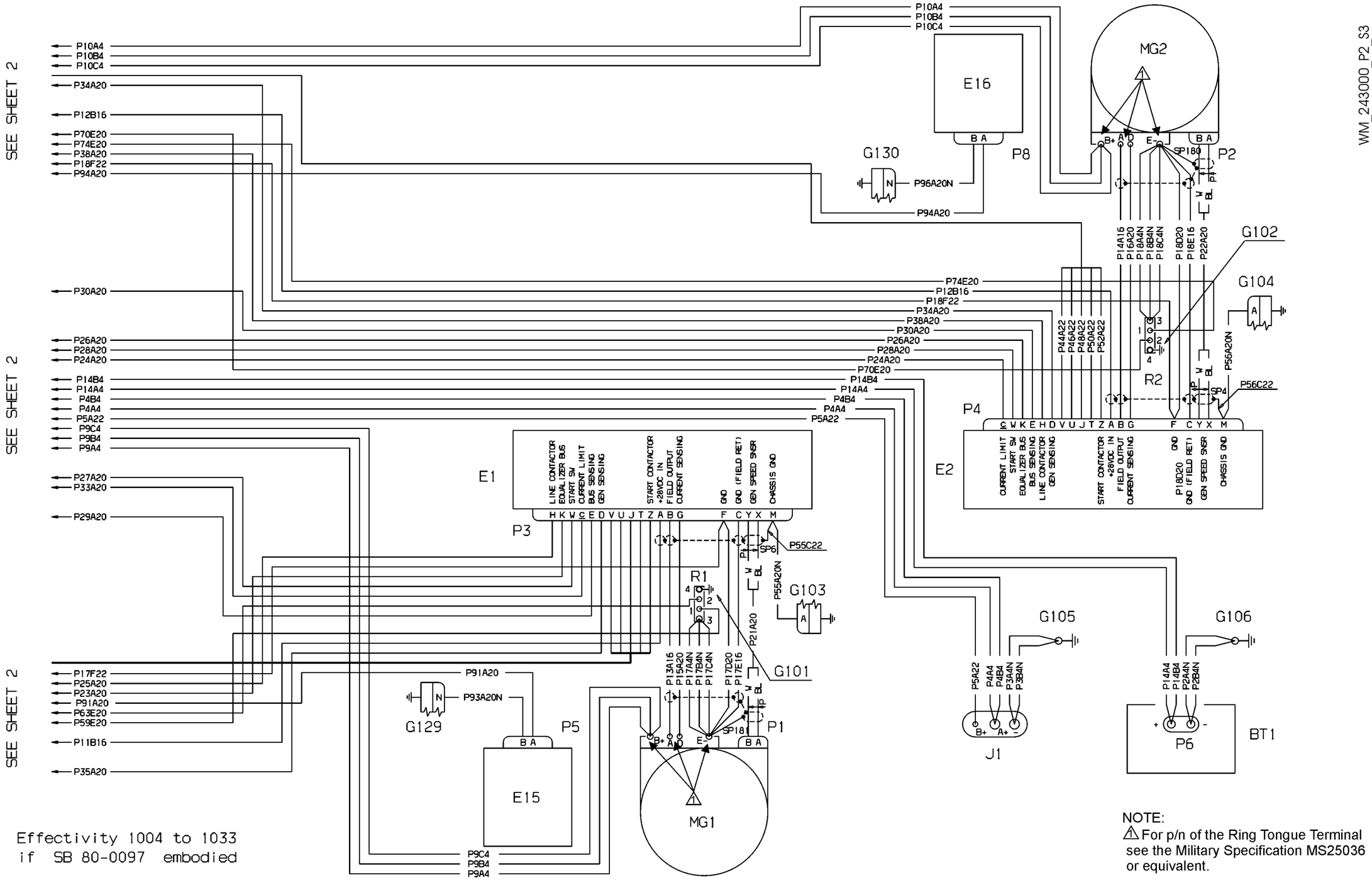


Effectivity 1004 to 1033
if SB 80-0097 embodied

NOTE:
⚠ For p/n of the Ring Tongue Terminal see the Military Specification MS25036 or equivalent.

WM_243000_P2_S3

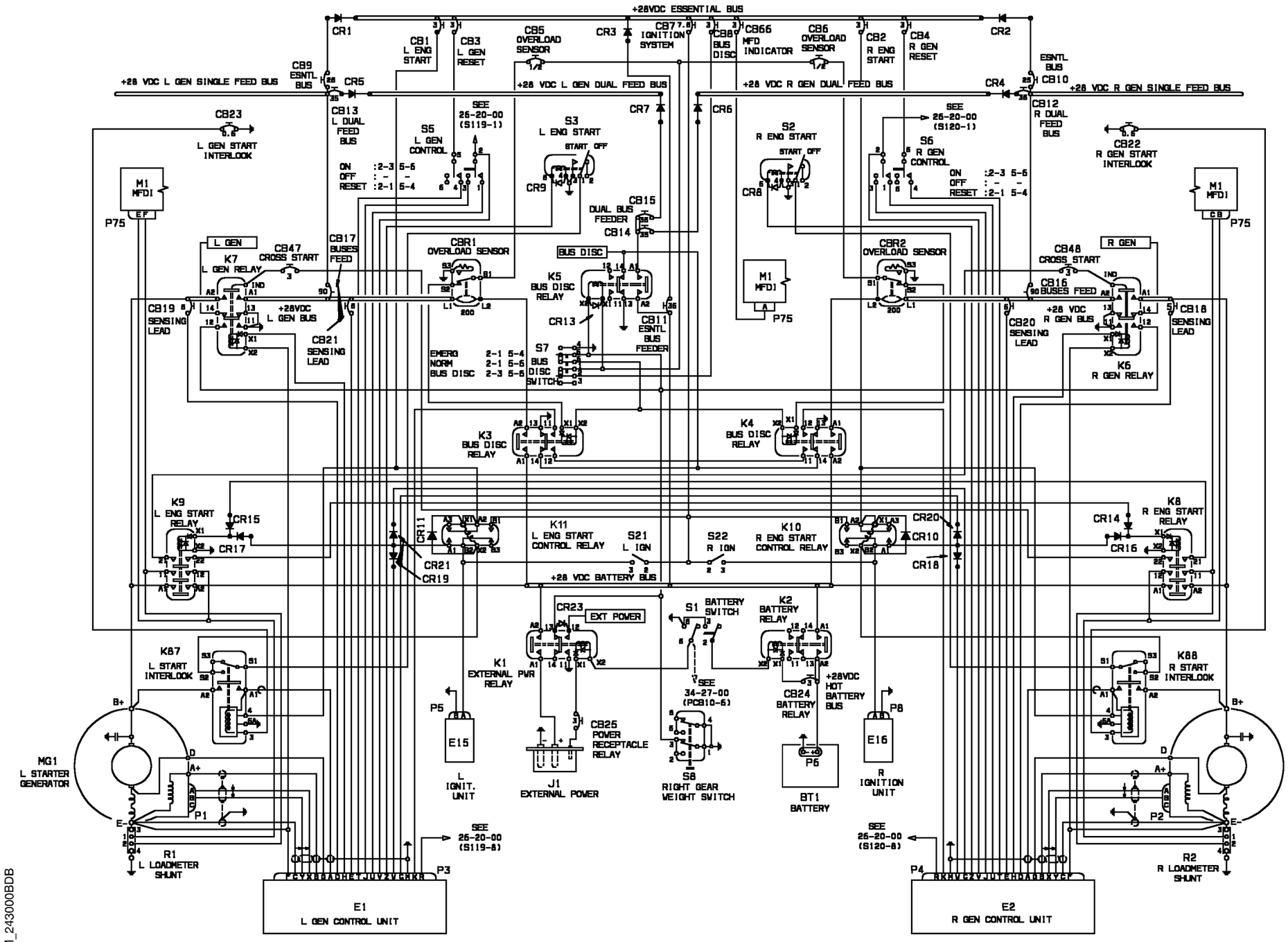


WM_243000BDB

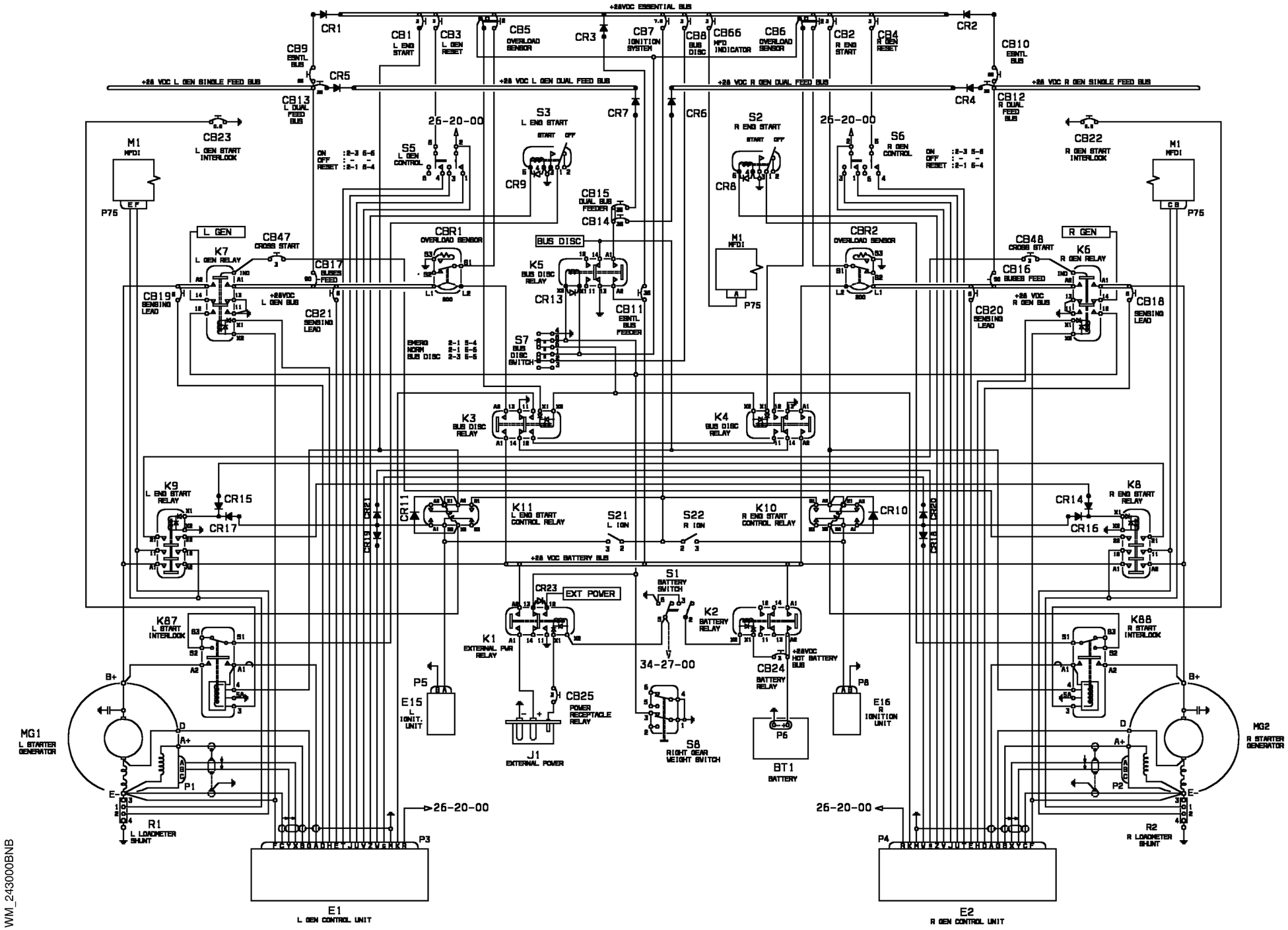


WM_243000BNB

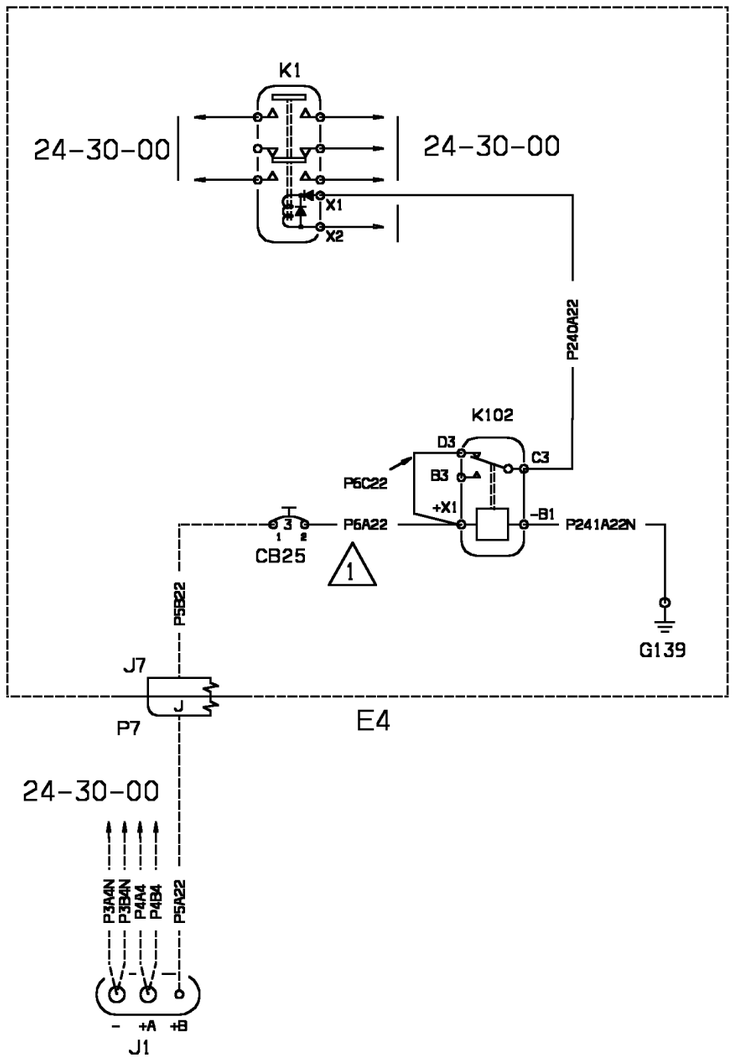


1 EXISTING WIRE TO CONNECT AS SHOWN

WM_243100KKA

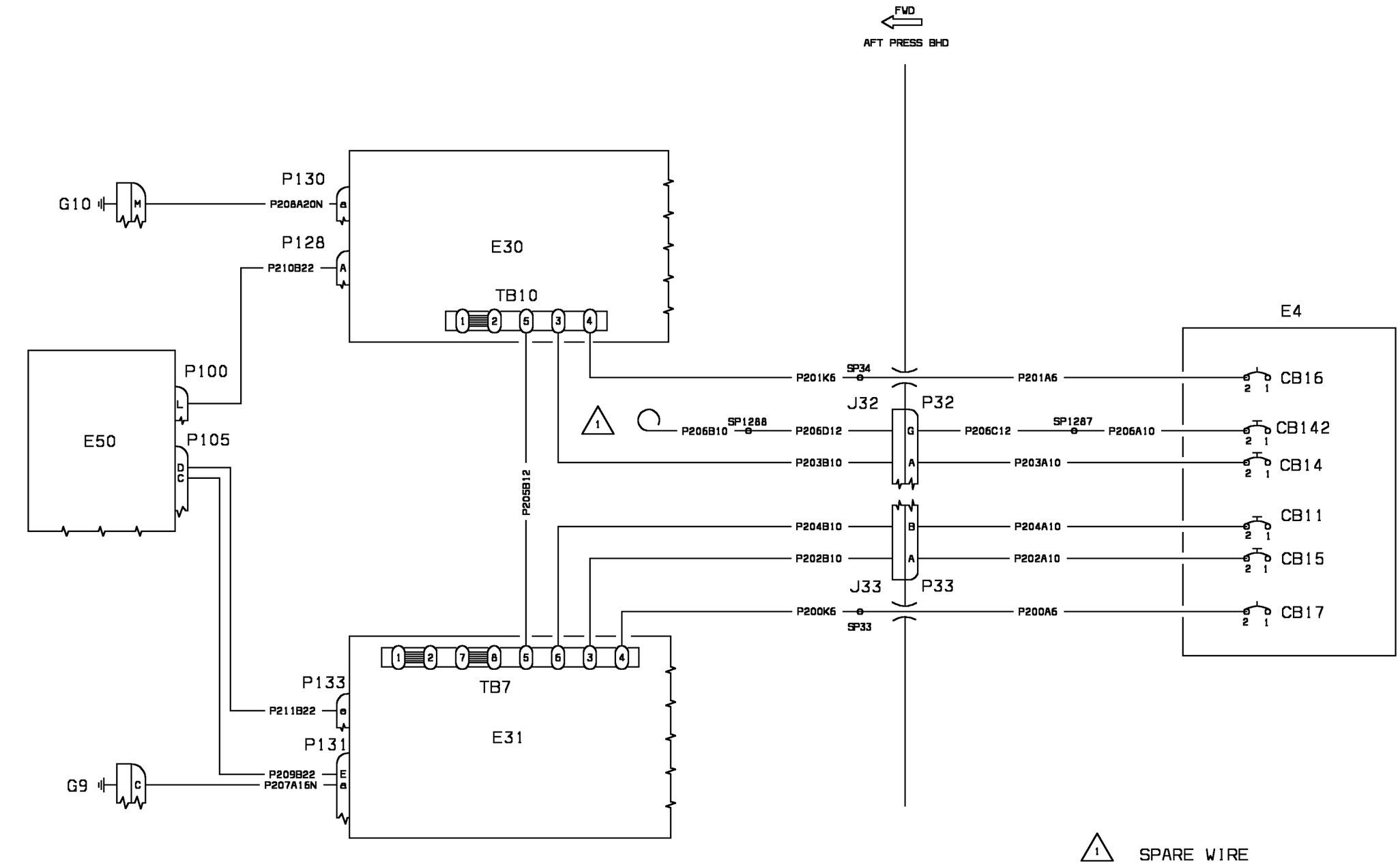
FWD
AFT PRESS BHD
G10
P130
P208A20N
a
M
P128
P210B22
A
E30
TB10
1
2
5
3
4
E4
P100
L
E50
P105
D
C
P201K6
SP34
P201A6
CB16
J32
P32
P206B10
SP1288
P206D12
G
P206C12
SP1287
P206A10
CB142
P203B10
A
P203A10
CB14
P205B12
P204B10
B
P204A10
CB11
P202B10
A
P202A10
CB15
J33
P33
P200K6
SP33
P200A5
CB17
1
2
7
8
5
6
3
4
P133
TB7
P211B22
a
E31
P131
G9
C
P209B22
E
P207A16N
a
SPARE WIRE

WM_246100bd

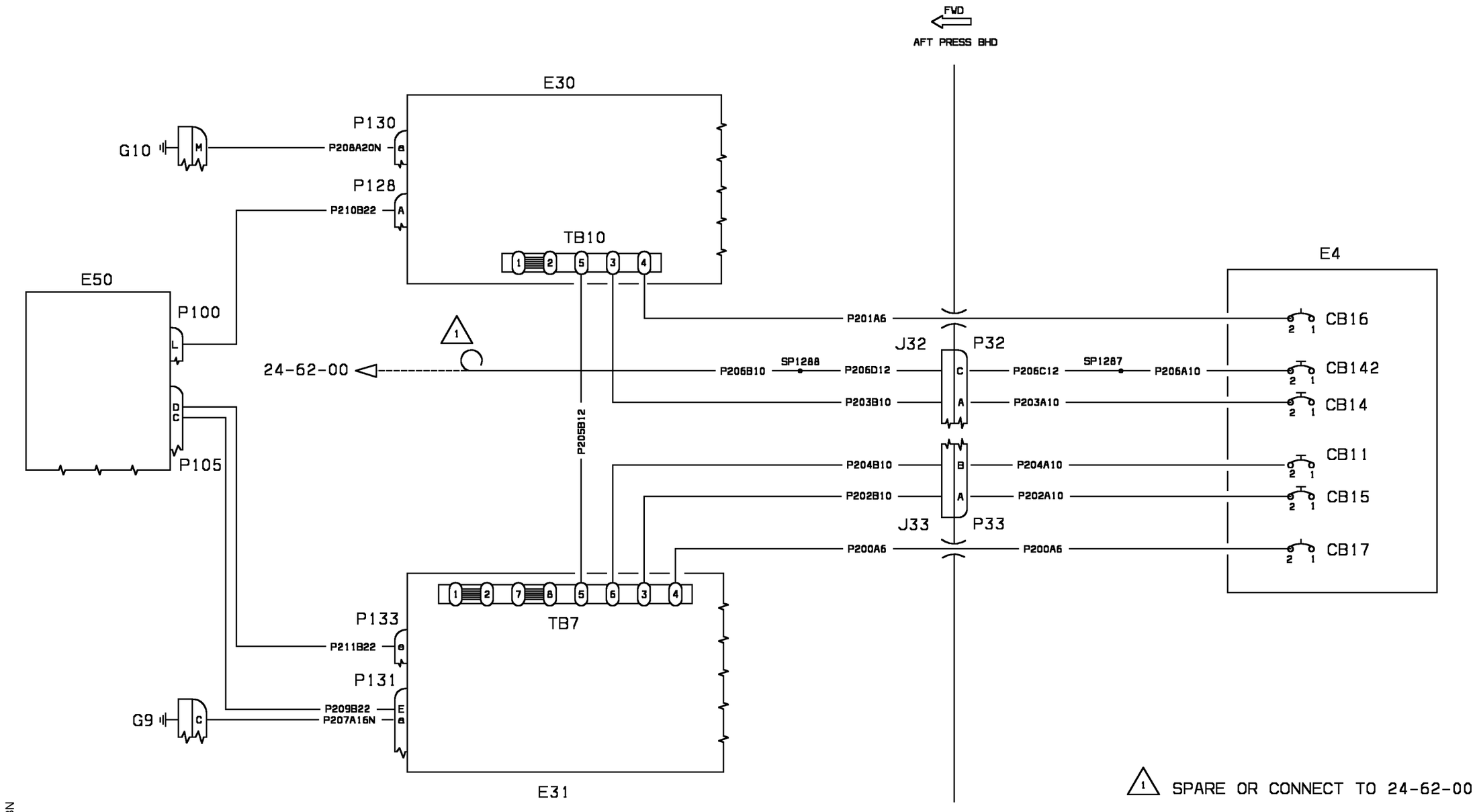
FWD
AFT PRESS BHD
E30
P130
G10
M
P208A20N
a
P128
P210B22
A
TB10
1
2
5
3
4
E50
P100
L
D
C
P105
E4
P201A6
CB16
J32
P32
24-62-00
1
P206B10
SP1288
P206D12
C
P206C12
SP1287
P206A10
CB142
P203B10
A
P203A10
CB14
P205B12
P204B10
B
P204A10
CB11
P202B10
A
P202A10
CB15
J33
P33
P200A6
P200A6
CB17
1
2
7
8
5
6
3
4
P133
TB7
P211B22
a
P131
P209B22
E
P207A16N
a
G9
C
E31
1
SPARE OR CONNECT TO 24-62-00

WM_246100BN

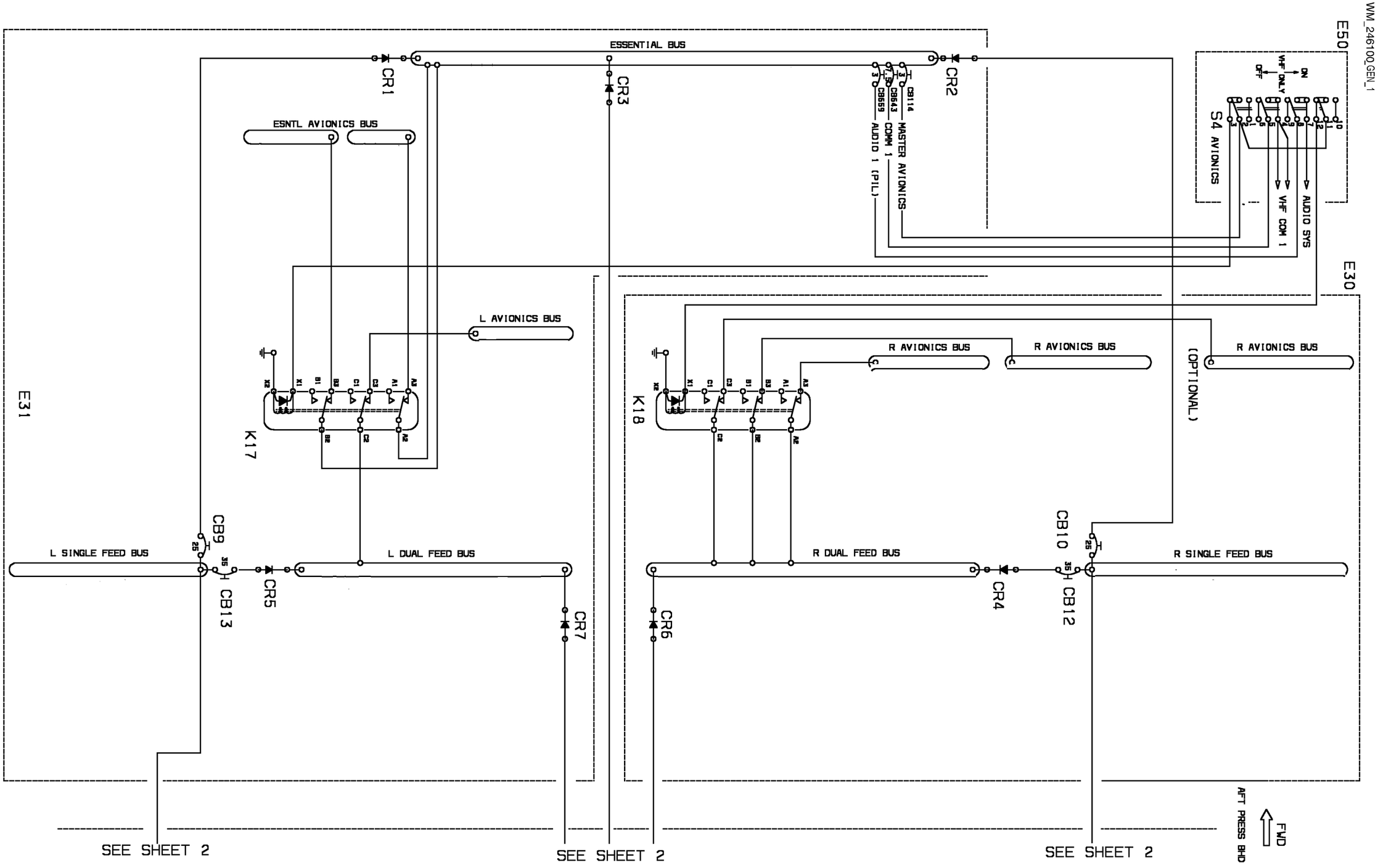
WM_246100_GEN_1
E50
S4 AVIONICS
VHF ONLY
ON
OFF
VHF COM 1
AUDIO SYS
E30
E31
ESSENTIAL BUS
CR1
CR3
CR2
CB114
CB643
CB659
MASTER AVIONICS
COMM 1
AUDIO 1 (PIL)
ESNTL AVIONICS BUS
L AVIONICS BUS
R AVIONICS BUS
R AVIONICS BUS
R AVIONICS BUS
(OPTIONAL)
K17
K18
CB9
CB13
CR5
CR7
L SINGLE FEED BUS
L DUAL FEED BUS
CB10
CB12
CR4
CR6
R DUAL FEED BUS
R SINGLE FEED BUS
AFT PRESS BHD
FWD
SEE SHEET 2
SEE SHEET 2
SEE SHEET 2

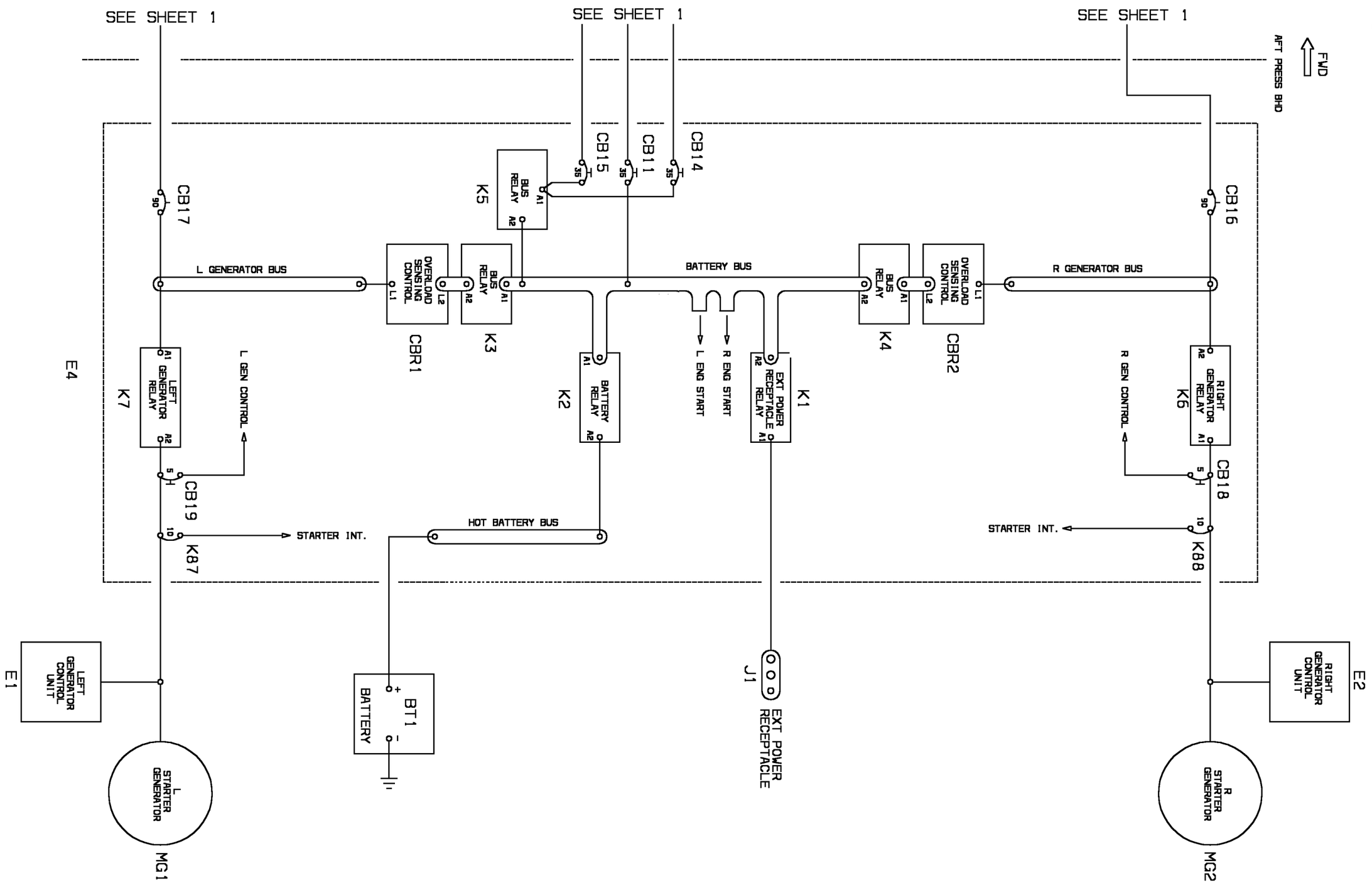
WM_246100_GEN_2
FWD
AFT PRESS BHD
SEE SHEET 1
SEE SHEET 1
SEE SHEET 1
CB17
CB15
CB11
CB14
CB16
K5
BUS RELAY
L GENERATOR BUS
OVERLOAD SENSING CONTROL
CBR1
K3
BUS RELAY
BATTERY BUS
BUS RELAY
K4
OVERLOAD SENSING CONTROL
CBR2
R GENERATOR BUS
E4
K7
LEFT GENERATOR RELAY
L GEN CONTROL
K2
BATTERY RELAY
L ENG START
R ENG START
K1
EXT POWER RECEPTACLE RELAY
R GEN CONTROL
K6
RIGHT GENERATOR RELAY
CB19
CB18
K87
STARTER INT.
HOT BATTERY BUS
STARTER INT.
K88
E1
LEFT GENERATOR CONTROL UNIT
BT1
BATTERY
J1
EXT POWER RECEPTACLE
E2
RIGHT GENERATOR CONTROL UNIT
L STARTER GENERATOR
MG1
R STARTER GENERATOR
MG2

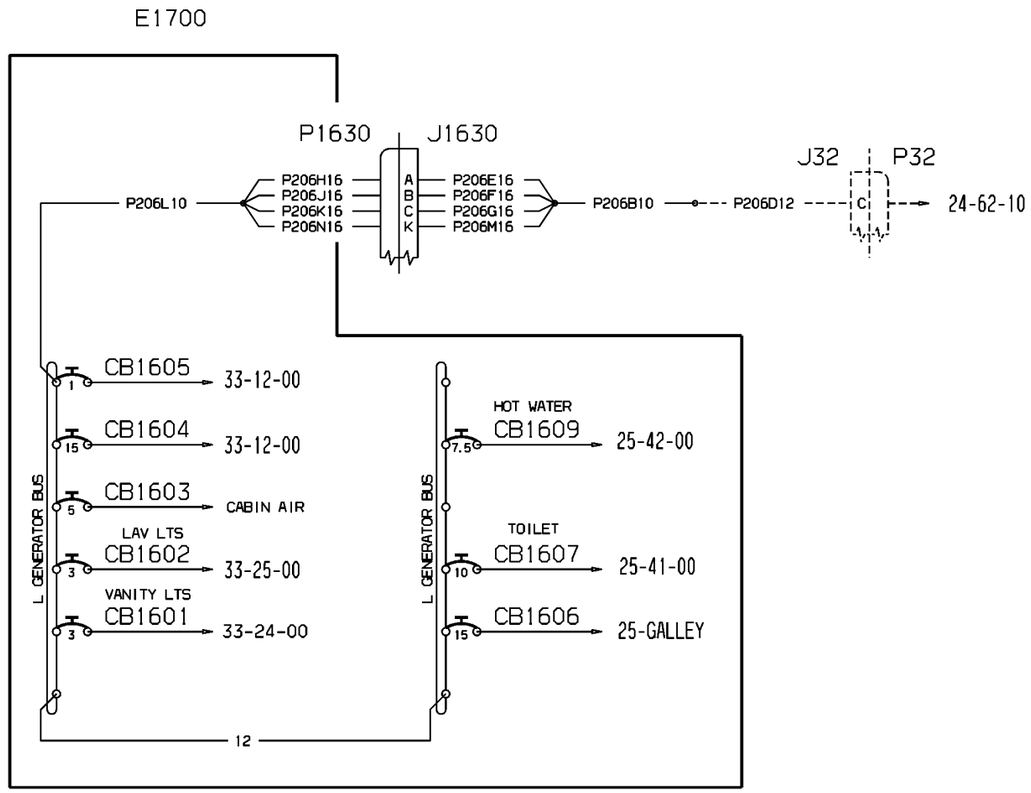


WM_246210_P1_S1

80-908071_F1_A

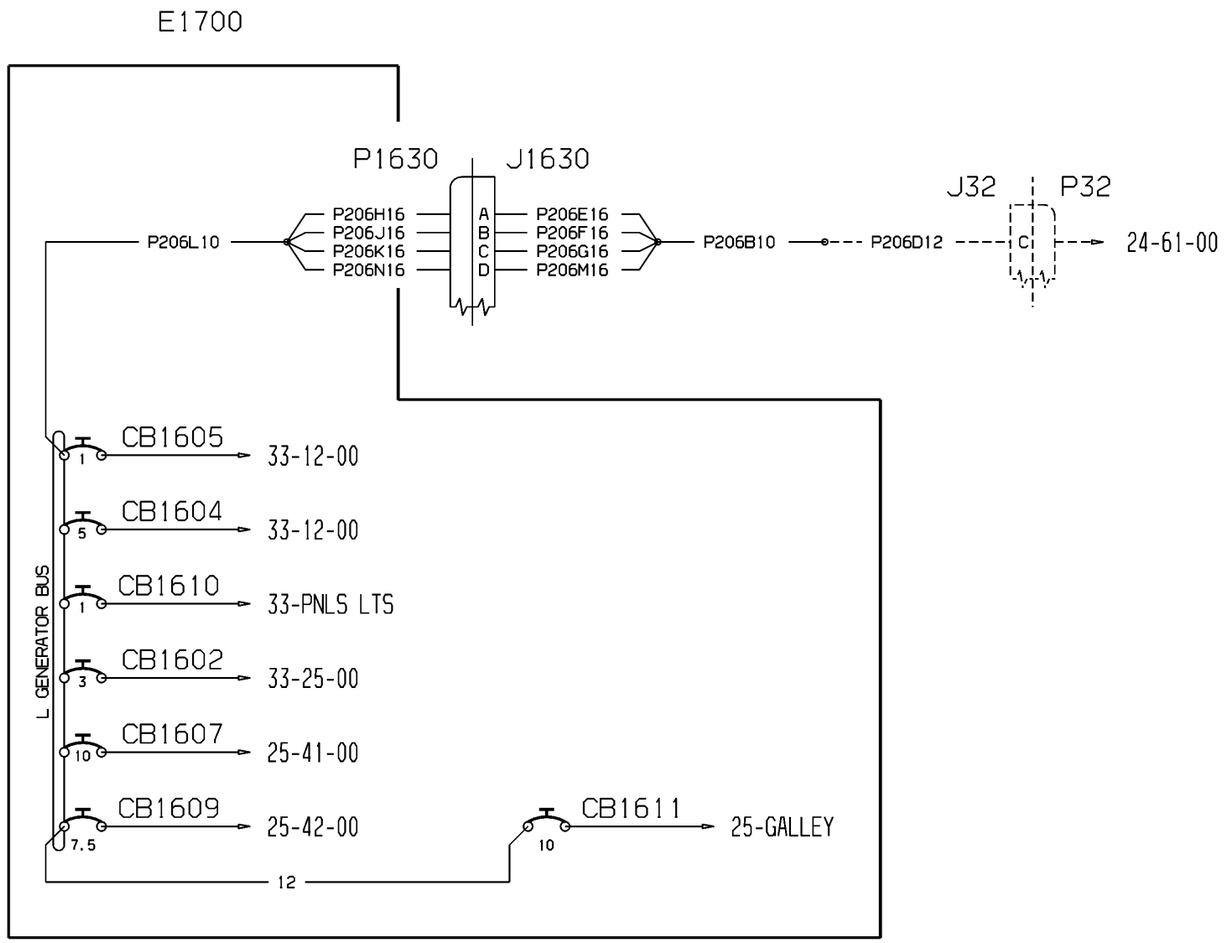


WM_246210_P2_S1

80-908311_1_B1

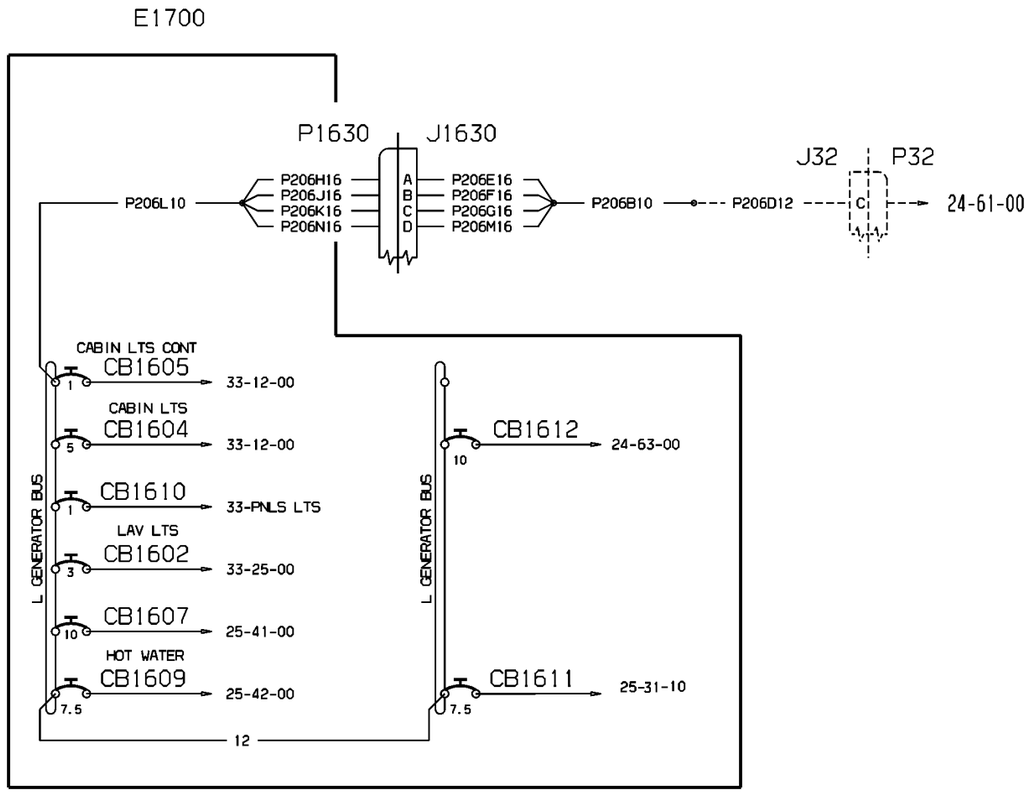


WM_246210_P3_S1

80-908335_1A

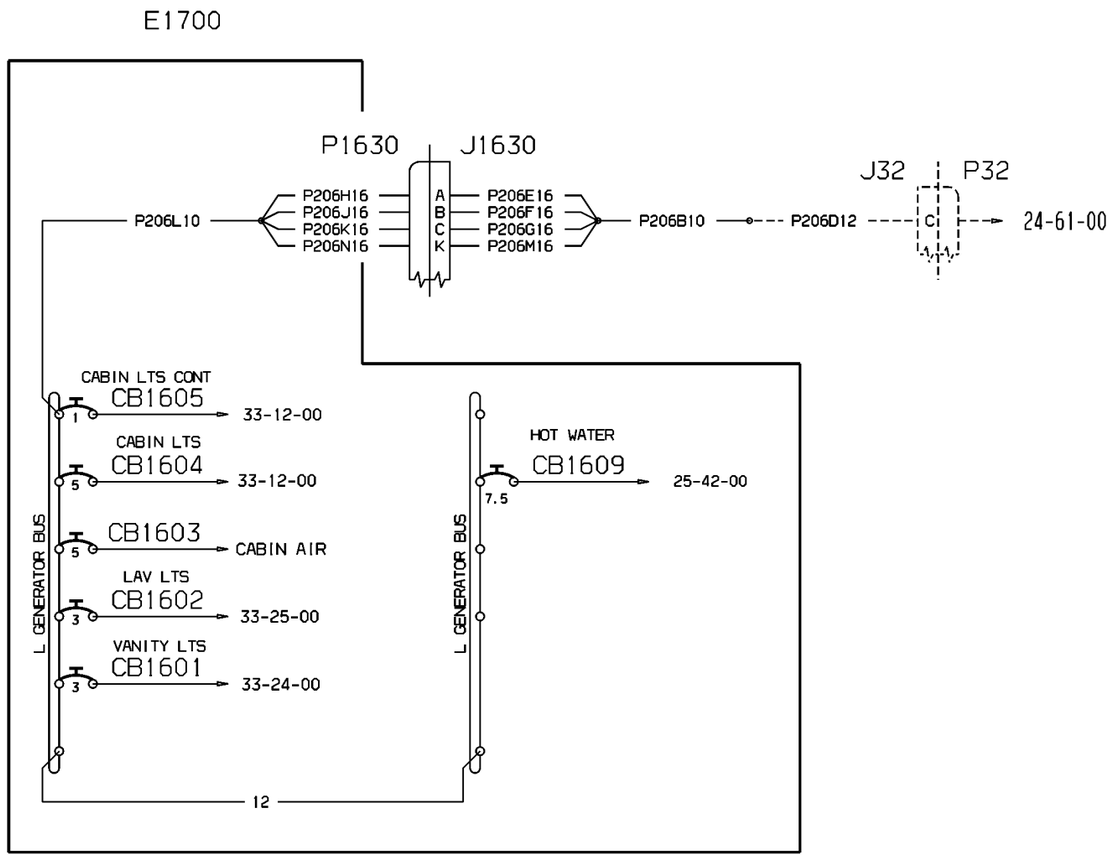


WM_246220_P1_S1

80-908086_1A

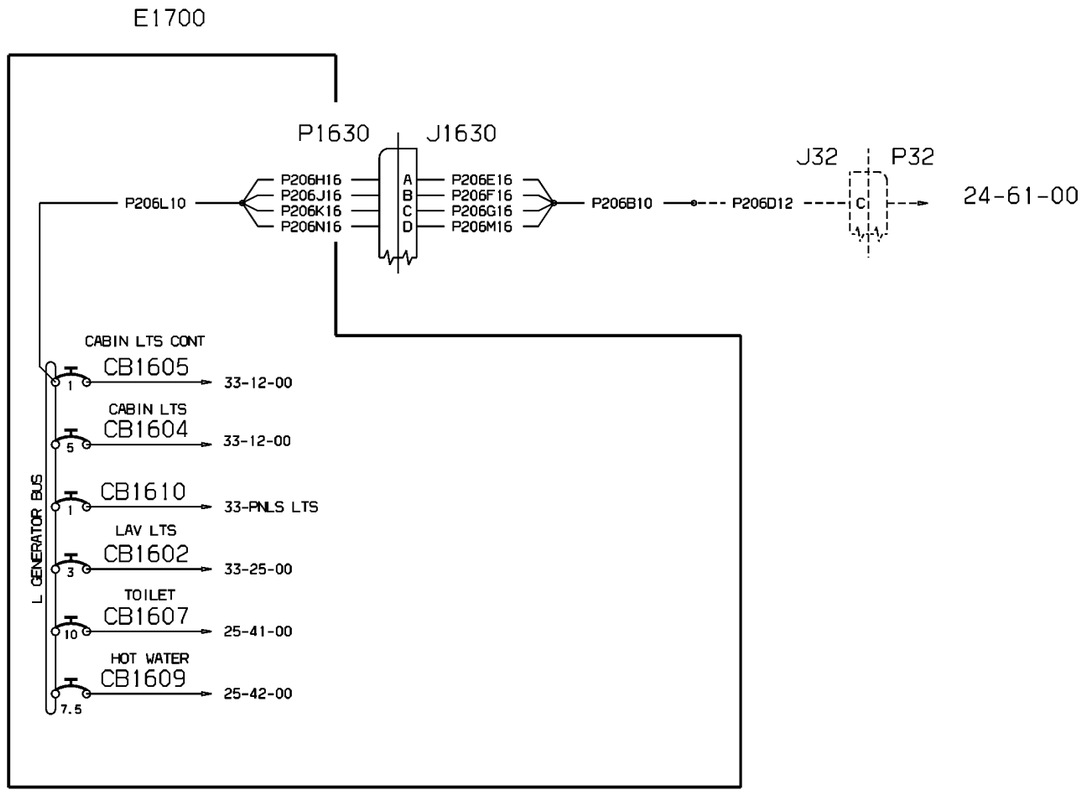


WM_246220_P2_S1

80-908323_1A

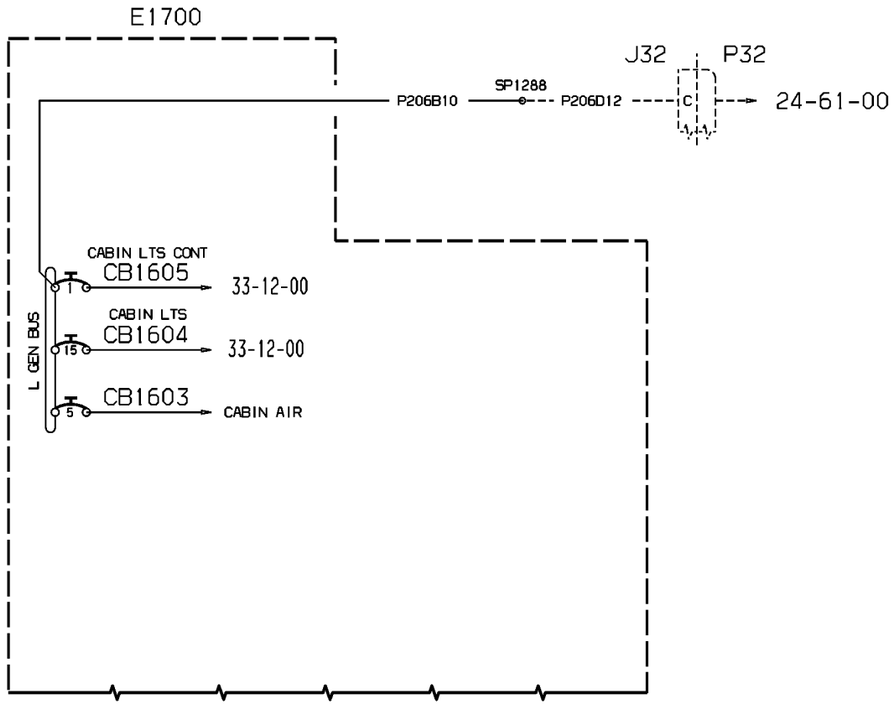


WM_246230_P1_S1

NOTE: AIRPLANES WITH
OPTIONS 5 8
CABIN ARRANGEMENTS

80-908040_1A

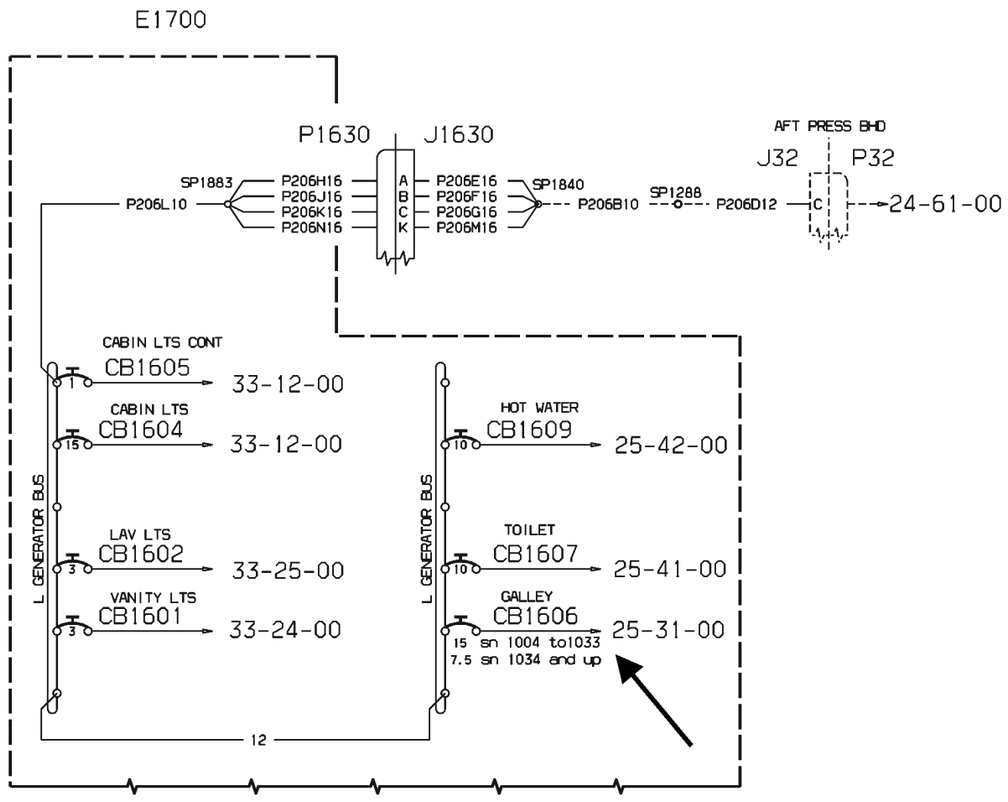


NOTE: AIRPLANES WITH OPTIONS 10 & 10B CABIN ARANGEMENTS

ON AIRPLANES N/C 1032 WITH OPTION 19 CABIN ARANGEMENT, (SB 80-0261 EMBODIED)

THE CB1606 IS NOT INSTALLATED

WM_246240_P1_S1

80-908058_1A

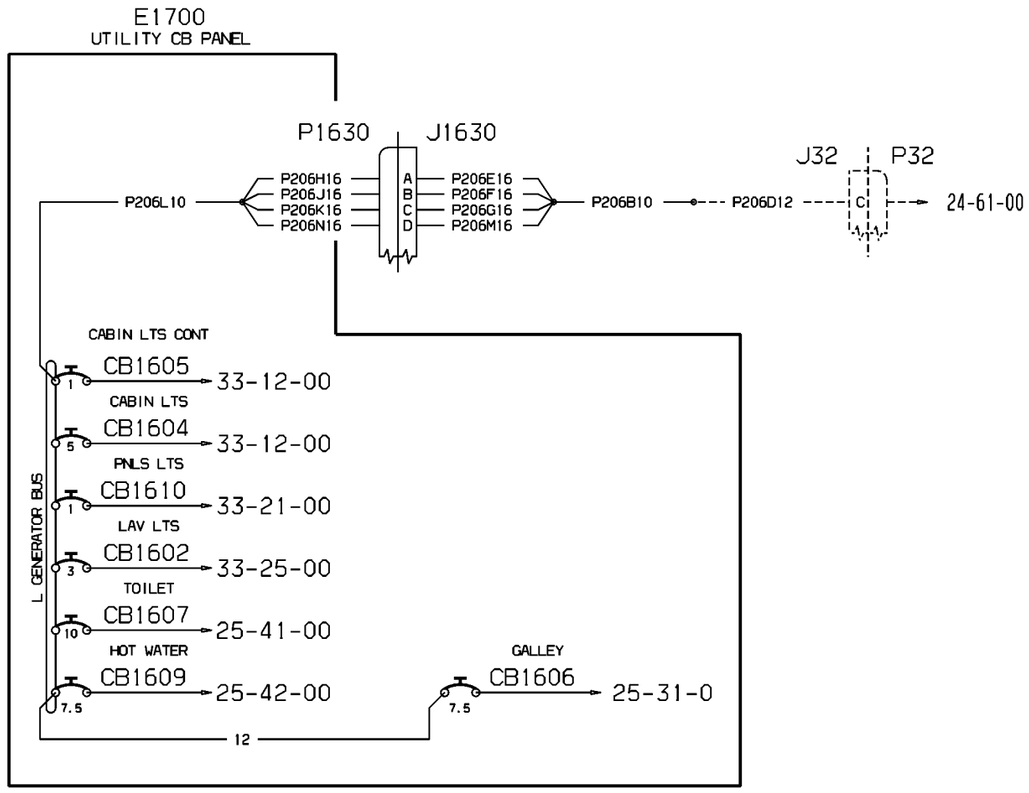


WM_246240_P2_S1

NOTE: AIRPLANE WITH OPTION 10
CABIN ARRNGEMENT

80-908318_1A

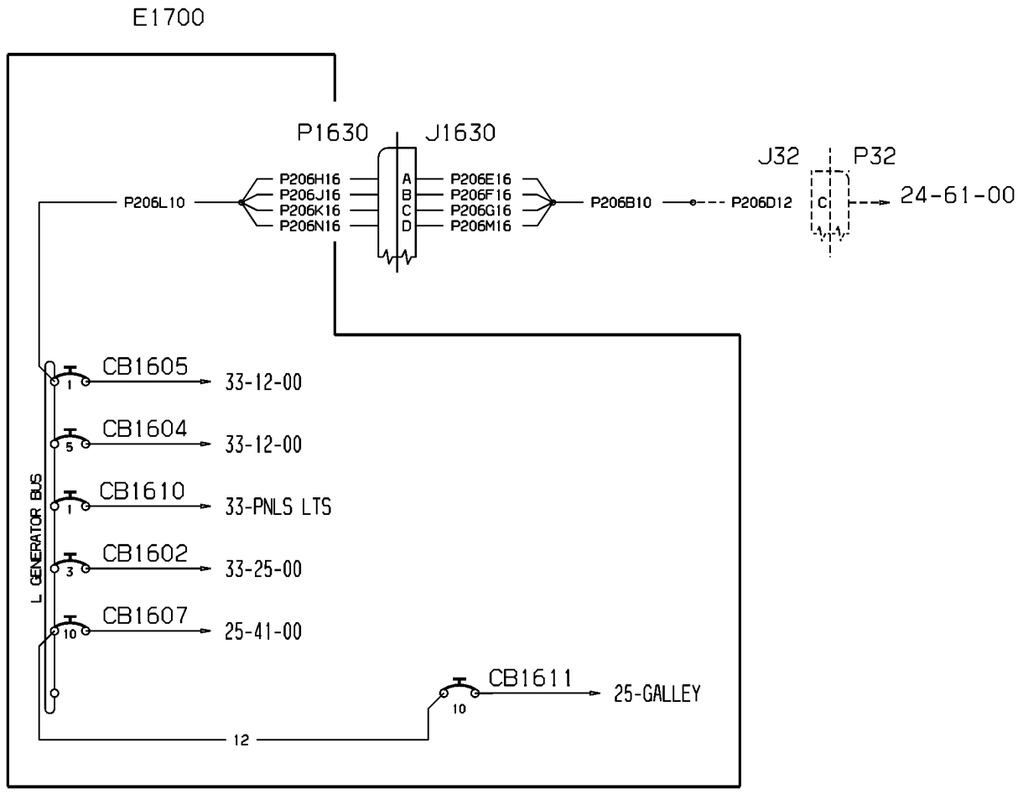


WM_246250_P1_S1

80-908343_1A

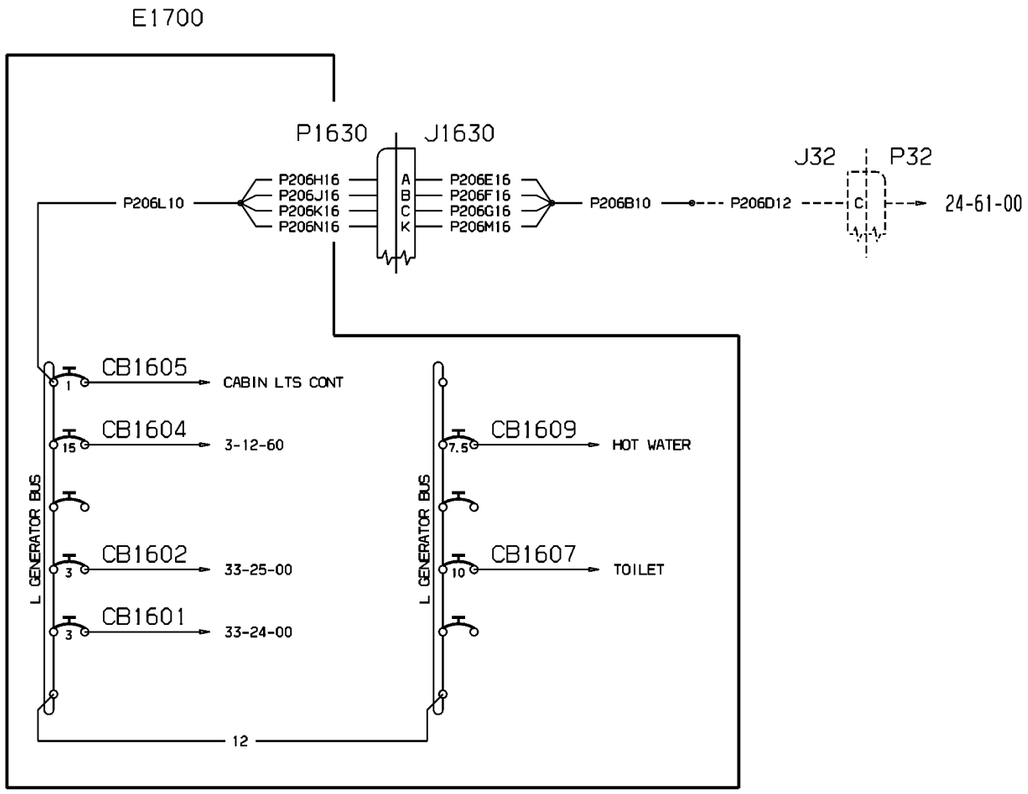


WM_246260_P1_S1

80-908094_F1_A1

| EFFECTIVITY: | DC ELECTRICAL LOAD DISTRIBUTION<br>Electrical Load Distribution (Opt.17) |
|---|---|

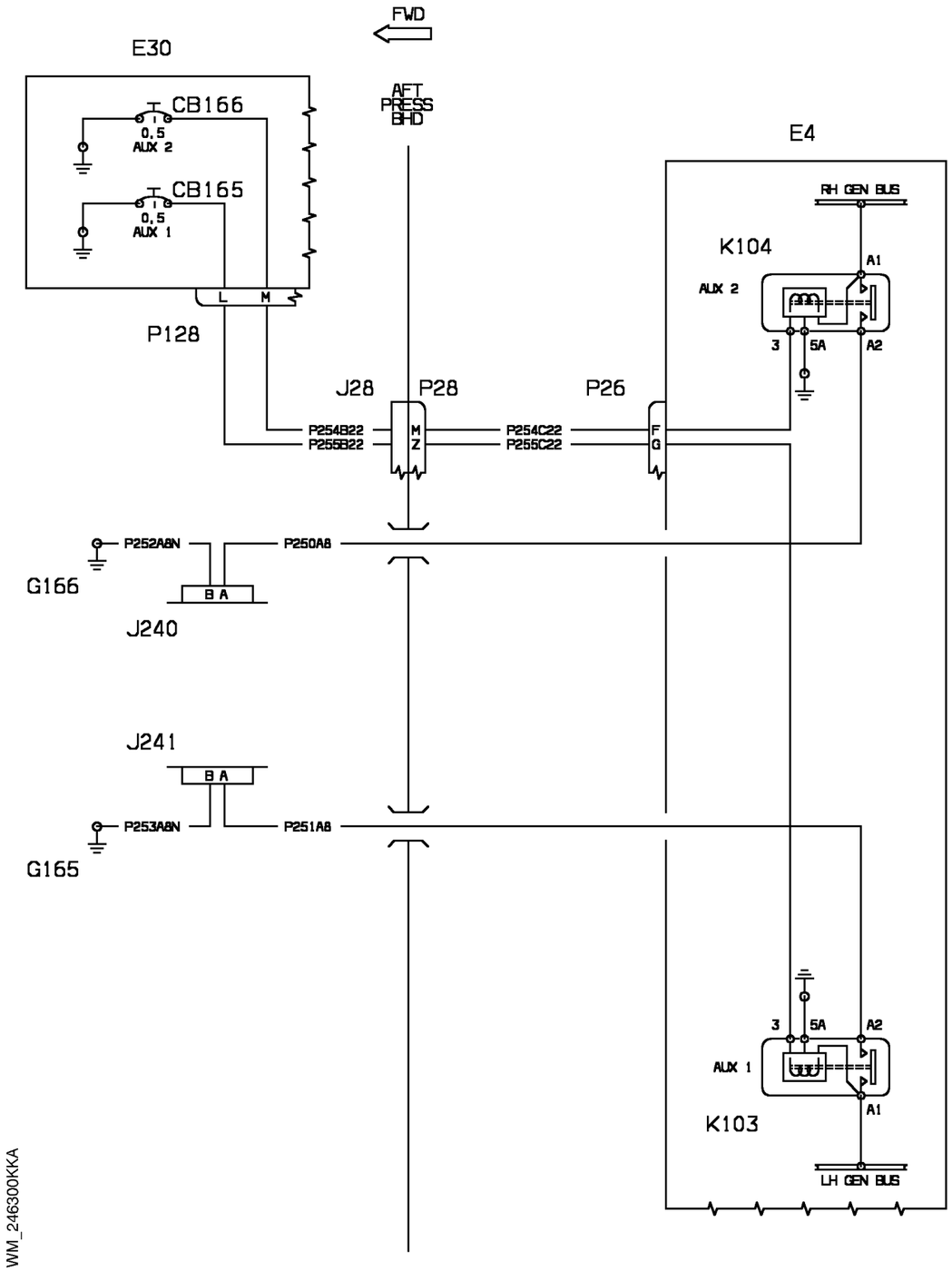


| EFFECTIVITY: | DC ELECTRICAL LOAD DISTRIBUTION<br>Aux. Power 1,2 (Opt) |
|---|---|

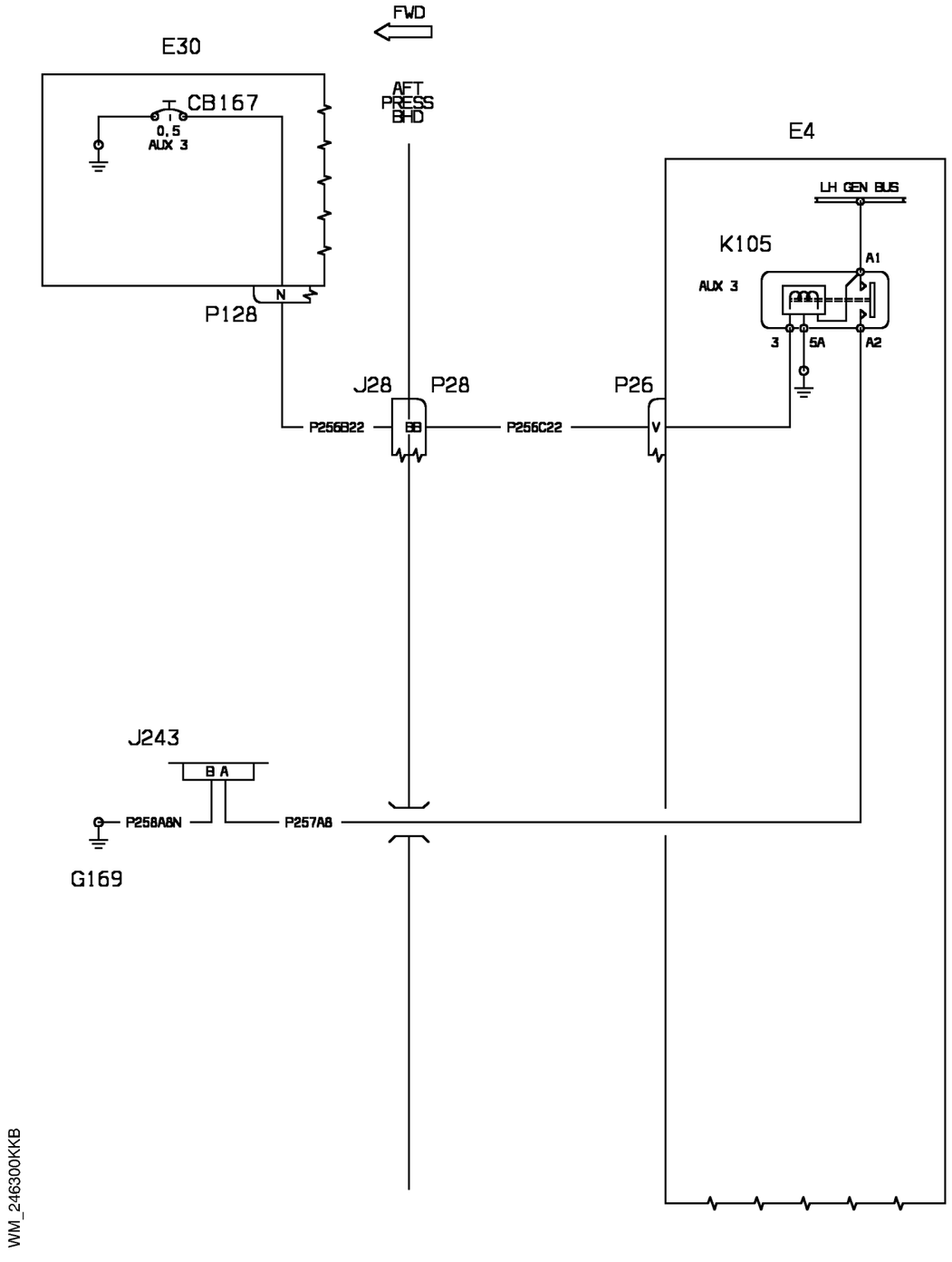
FWD
E30
CB167
0.5
AUX 3
AFT PRESS BHD
P128
N
E4
LH GEN BUS
K105
AUX 3
A1
3
5A
A2
J28
P28
P26
P256B22
BB
P256C22
V
J243
B A
P258A8N
P257A8
G169
WM_246300KKB

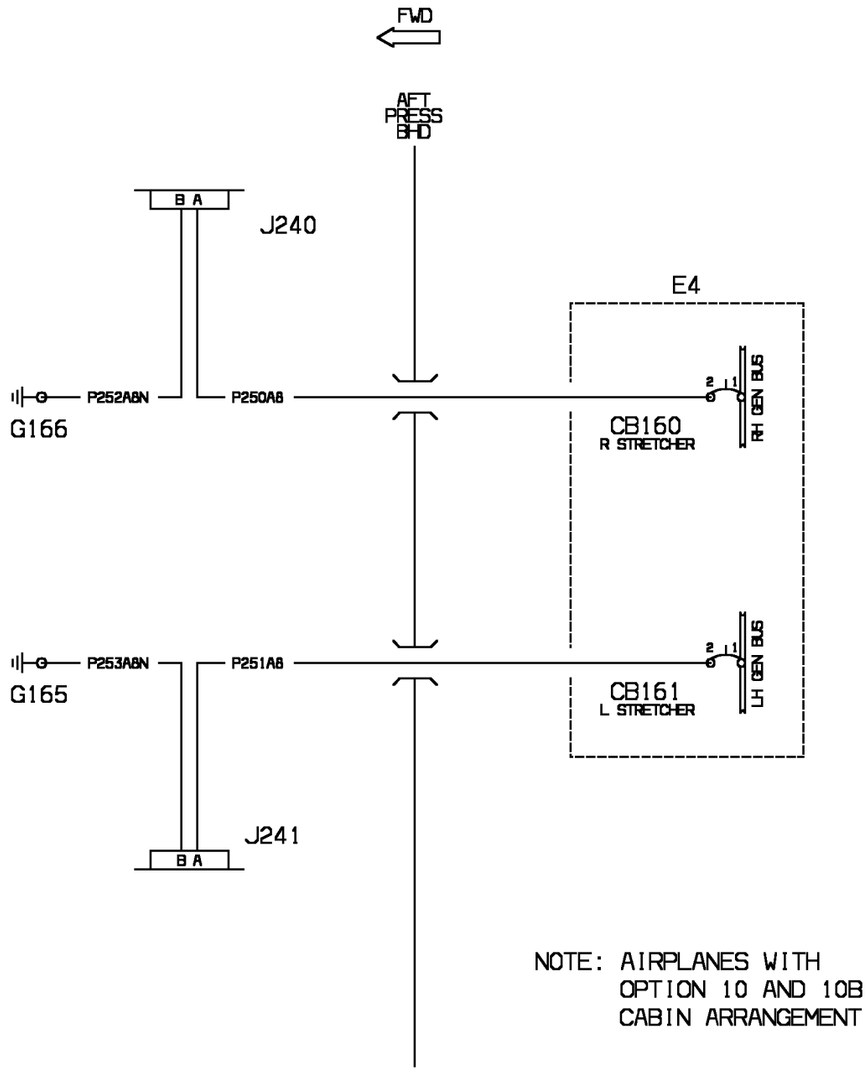


WM_246300KKC

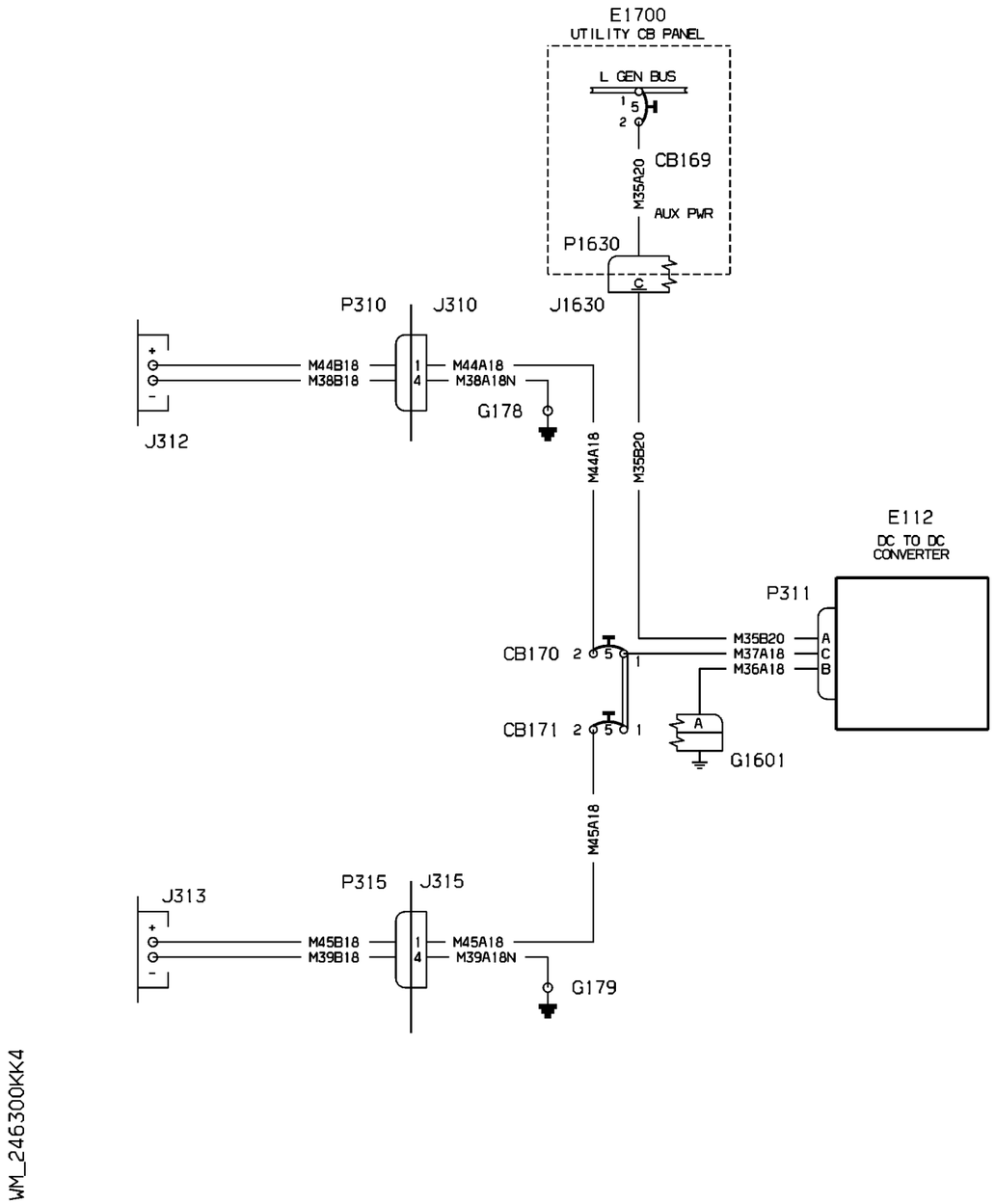


WM_246300KK4

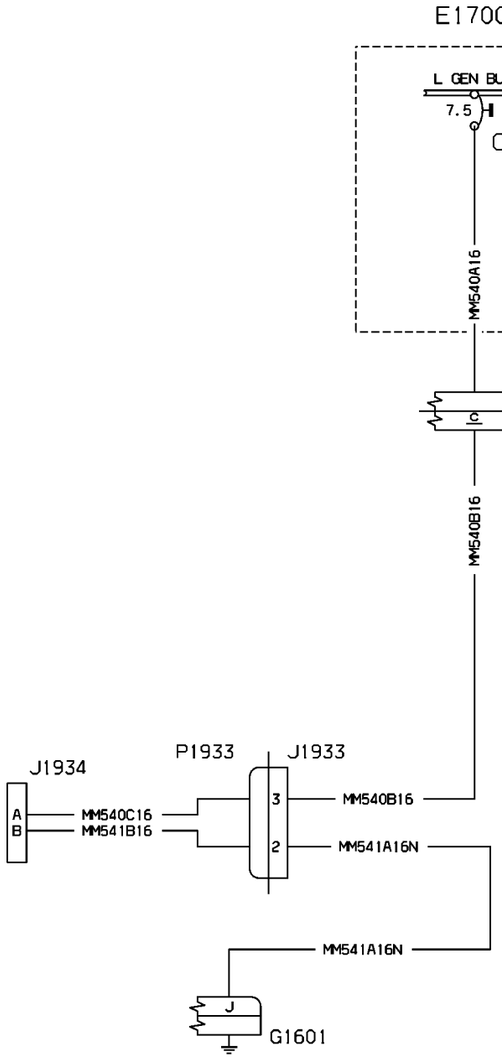


WM_246300KK5

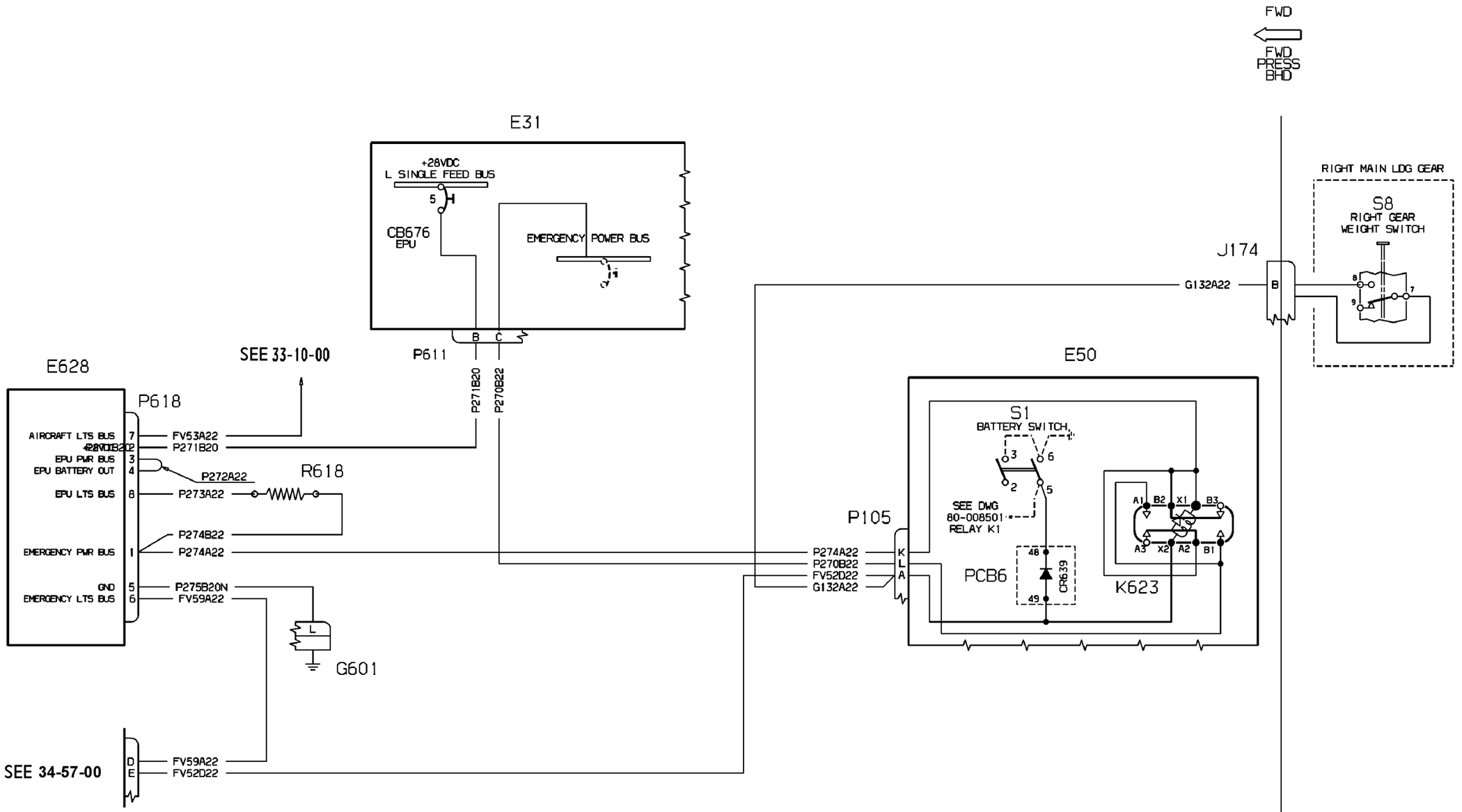


Diagram effectivity
with SB80-0045 embodieb

WM_246400BN

Note: effectivity 1034 - 1057 if SB. 80-0167 rev1 (Opt.) Embodied

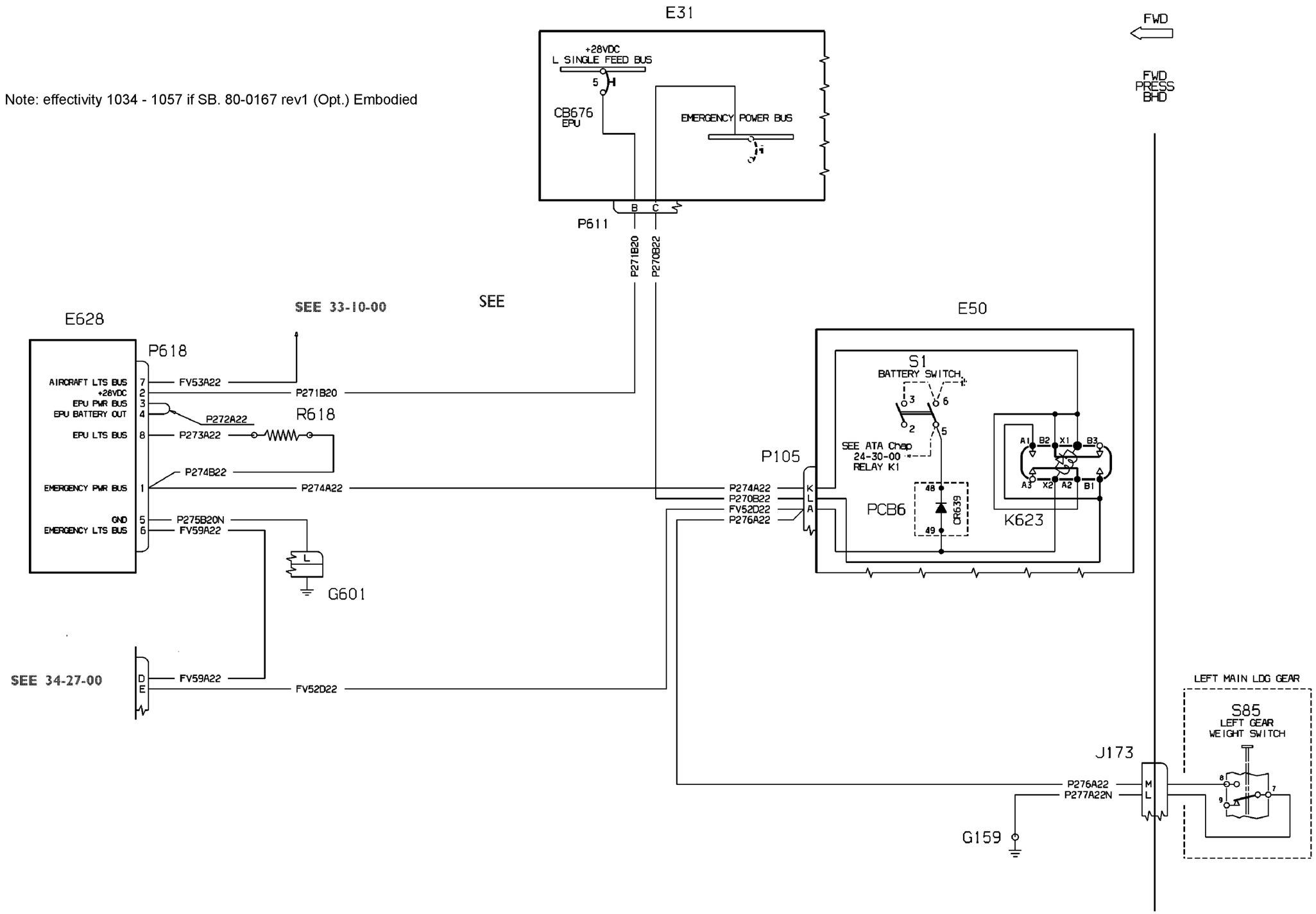


VM_246400CV

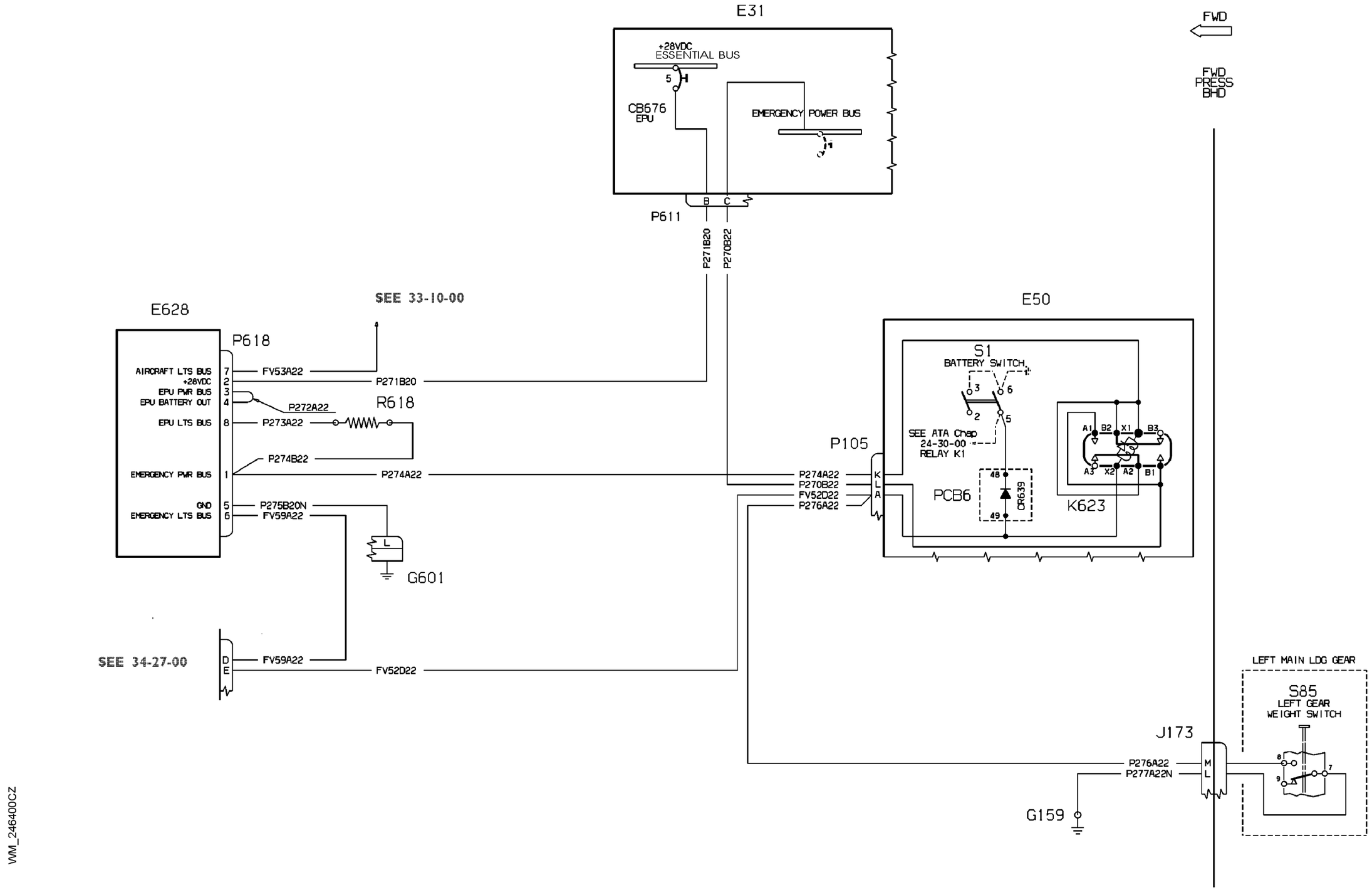
E31
+28VDC
ESSENTIAL BUS
5
CB676
EPU
EMERGENCY POWER BUS
11
B
C
P611
P271B20
P270B22
FWD
FWD
PRESS
BHD
SEE 33-10-00
E628
P618
AIRCRAFT LTS BUS 7 FV53A22
+28VDC 2 P271B20
EPU PWR BUS 3
EPU BATTERY OUT 4 P272A22
R618
EPU LTS BUS 8 P273A22
EMERGENCY PWR BUS 1 P274B22
P274A22
GND 5 P275B20N
EMERGENCY LTS BUS 6 FV59A22
G601
SEE 34-27-00
D FV59A22
E FV52D22
E50
P105
P274A22 K
P270B22 L
FV52D22 A
P276A22
S1
BATTERY SWITCH
3
6
2
5
SEE ATA Chap
24-30-00
RELAY K1
PCB6
48
49
CR639
A1 B2 X1 B3
A3 X2 A2 B1
K623
LEFT MAIN LDG GEAR
S85
LEFT GEAR
WEIGHT SWITCH
J173
M
L
P276A22
P277A22N
G159

WM_246400CZ

CHAPTER 25 - EQUIPMENT/FURNISHINGS
LIST OF EFFECTIVE PAGES

| CHAPTER SECTION SUBJECT | PAGE | SHEET | DATE |
|---|---|---|---|
| 25 - LOEP | 1 | | June 30/11 |
| | 2 | | June 30/11 |
| 25 - TOC | 1 | | June 30/11 |
| | 2 | | June 30/11 |
| 25-31-00 | 1 | | Oct. 30/09 |
| 25-31-00 | 2 | | Oct. 30/09 |
| 25-31-10 | 1 | | Oct. 30/09 |
| 25-41-00 | 1 | | Oct. 30/09 |
| 25-42-00 | 1 | | June 30/10 |
| 25-42-00 | 2 | | June 30/10 |
| 25-61-00 | 1 | | Oct. 30/09 |
| 25-62-00 | 1 | | Oct. 30/09 |
| 25-63-00 | 1 | | June 30/11 |

INTENTIONALLY LEFT BLANK

CHAPTER 25 - EQUIPMENT/FURNISHINGS
TABLE OF CONTENTS


| SUBJECT | CHAPTER SECTION SUBJECT | PAGE | SHEET |
|---|---|---|---|
| GALLEY | | | |
| Galley (Opt. ) | 25-31-00 | 1 | |
| Galley (Opt. 1 M.M.) | 25-31-00 | 2 | |
| Provision for Galley | 25-31-10 | 1 | |
| LAVATORIES | | | |
| Toilet (Optional) | 25-41-00 | 1 | |
| Hot Water ( Optional ) | 25-42-00 | 1 | |
| Hot Water ( Optional ) | 25-42-00 | 2 | |
| EMERGENCY | | | |
| Emergency Locator Transmitter | 25-61-00 | 1 | |
| E.L.T. System Kit (Optional) | 25-62-00 | 1 | |
| E.L.T. ARTEX System (Opt.) | 25-63-00 | 1 | |

INTENTIONALLY LEFT BLANK

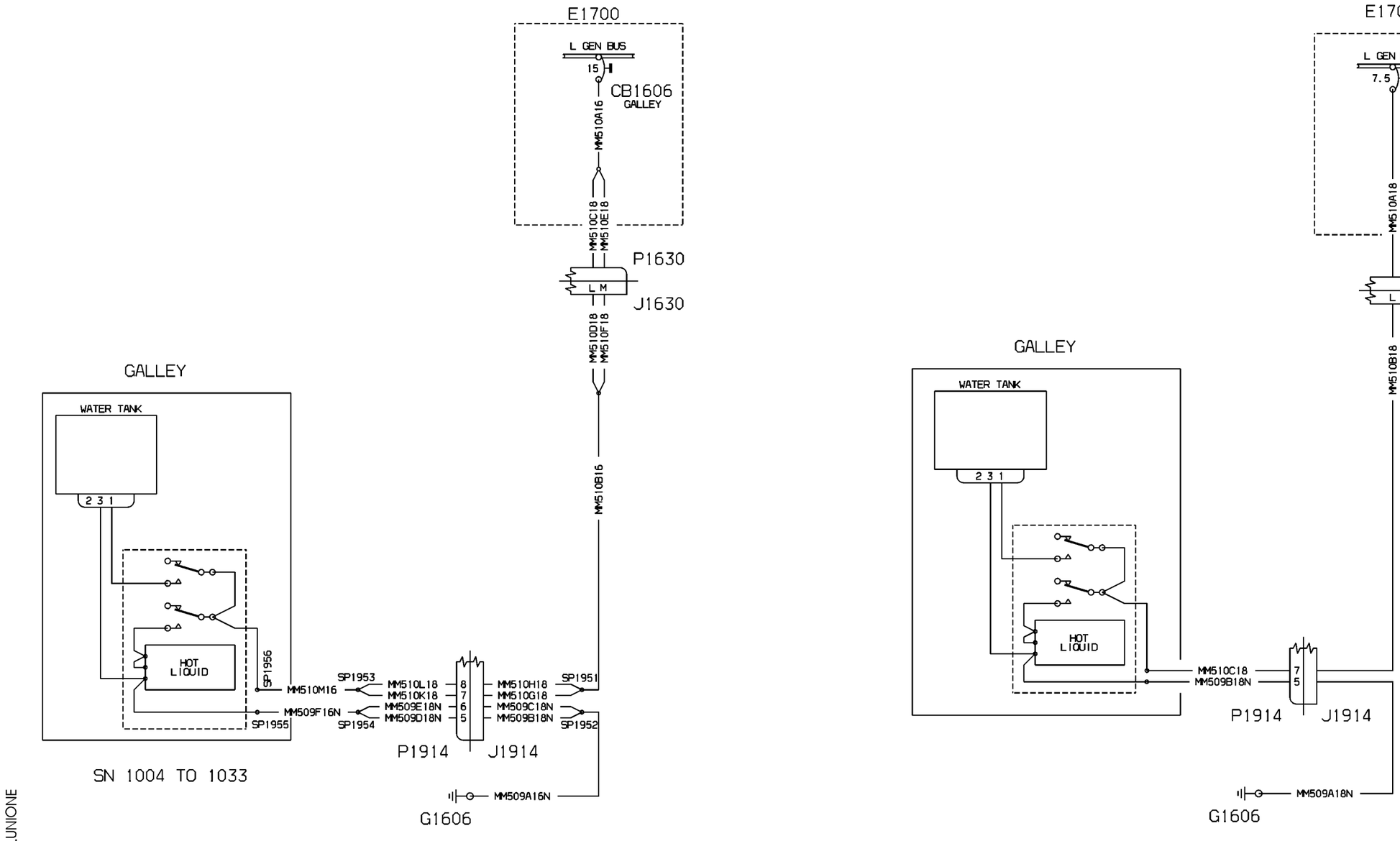


WM_253100_UNIONE

80-908049_F1_F2_A1

| EFFECTIVITY: | GALLEY<br>Galley (Opt. ) |
|---|---|

Note: INTERIOR Opt 1 new version allowing an easy replacement whith Opt 10, if SB 80-0218 eEmbodied

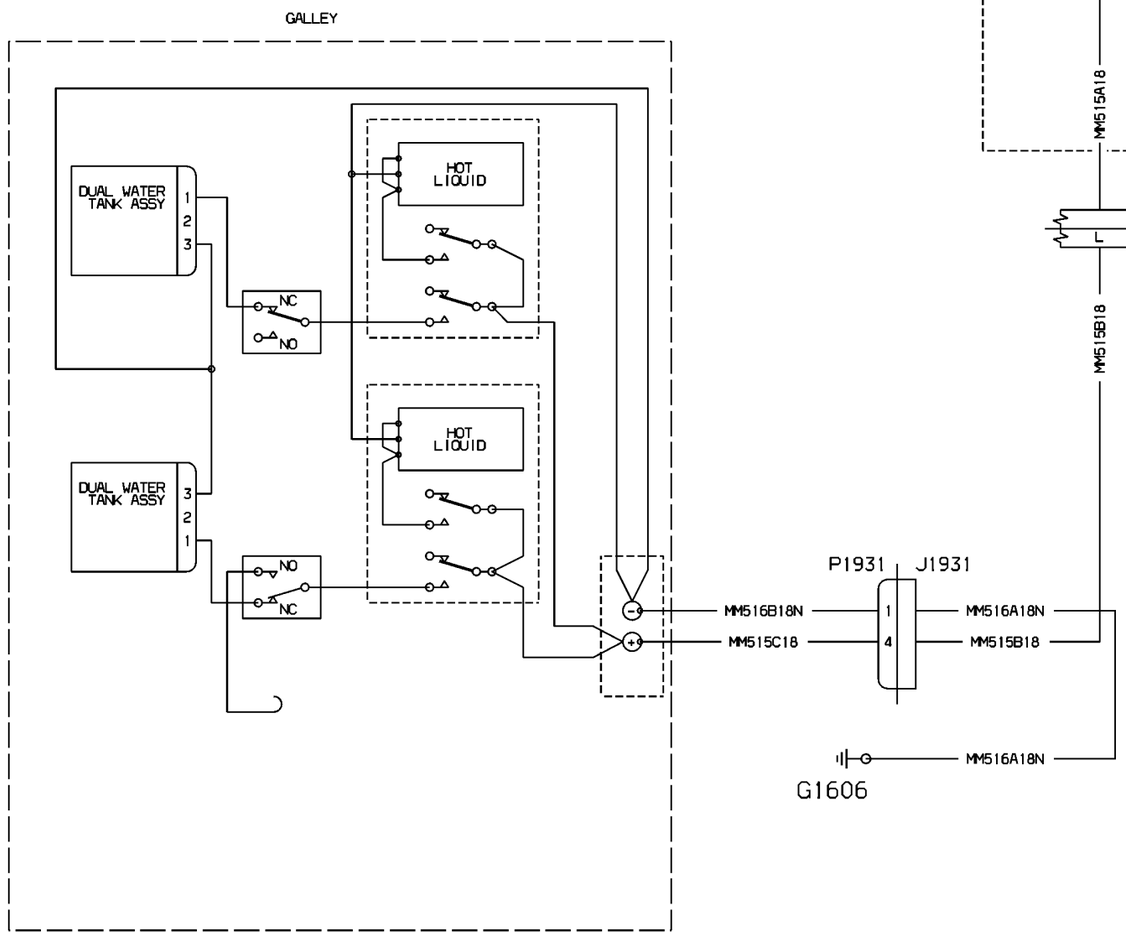


SW_253100_P2_S1

80-908310_F1_B

| EFFECTIVITY: | GALLEY<br>Galley (Opt. 1 M.M.) |
|---|---|

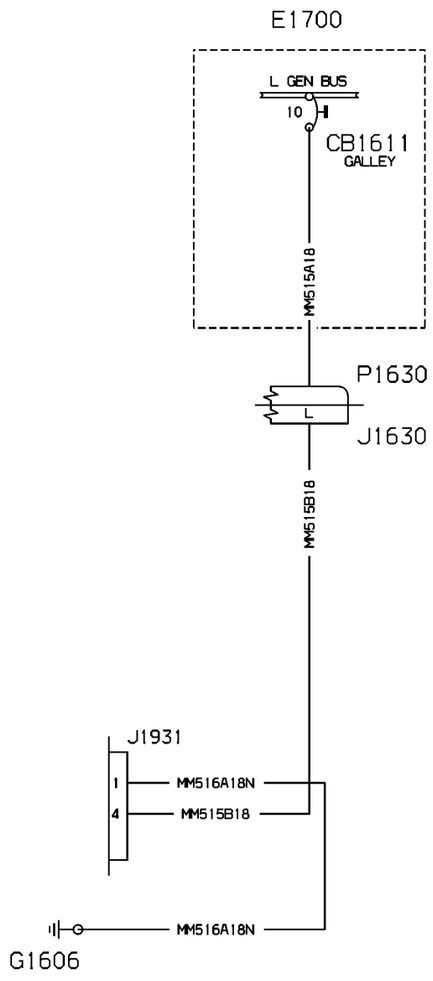


WM_253110KKA1

| EFFECTIVITY: | GALLEY<br>Provision for Galley |
|---|---|

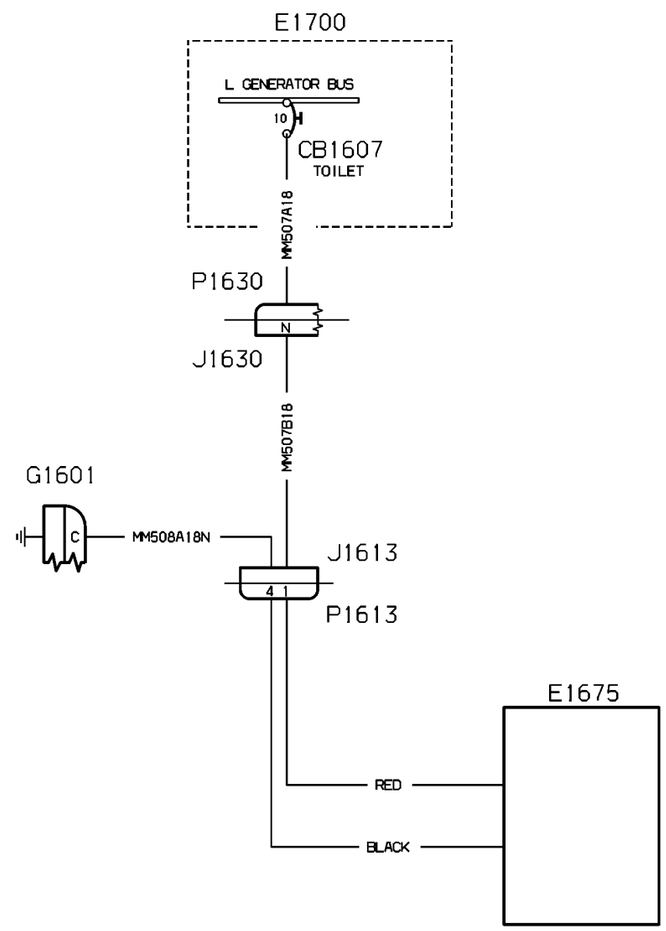


WM_254100_P1_S1

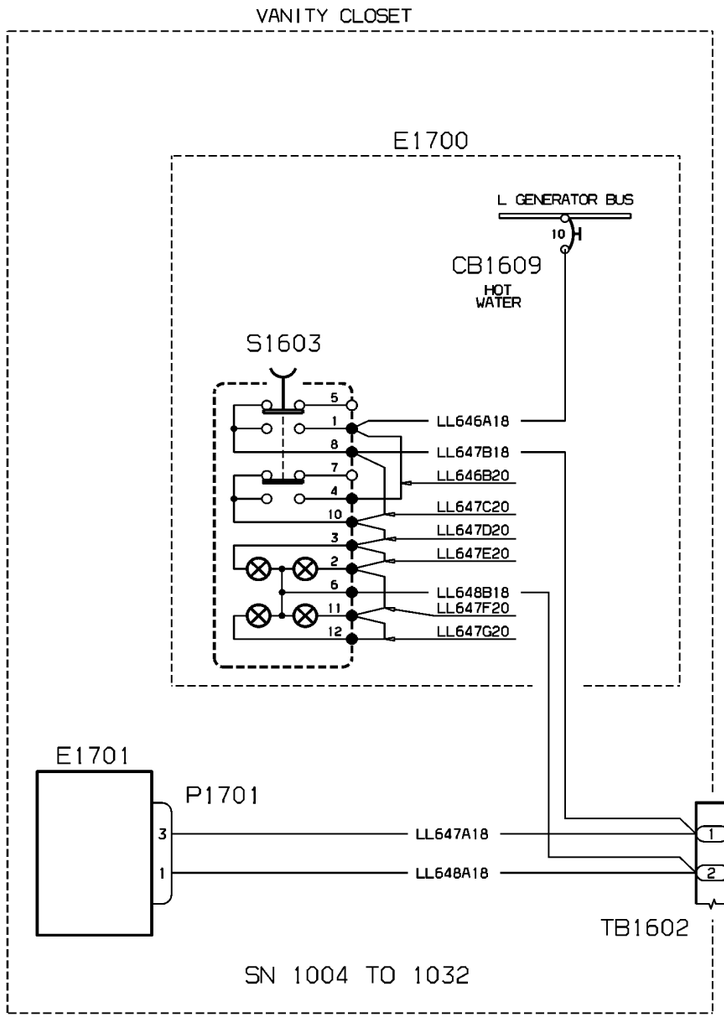


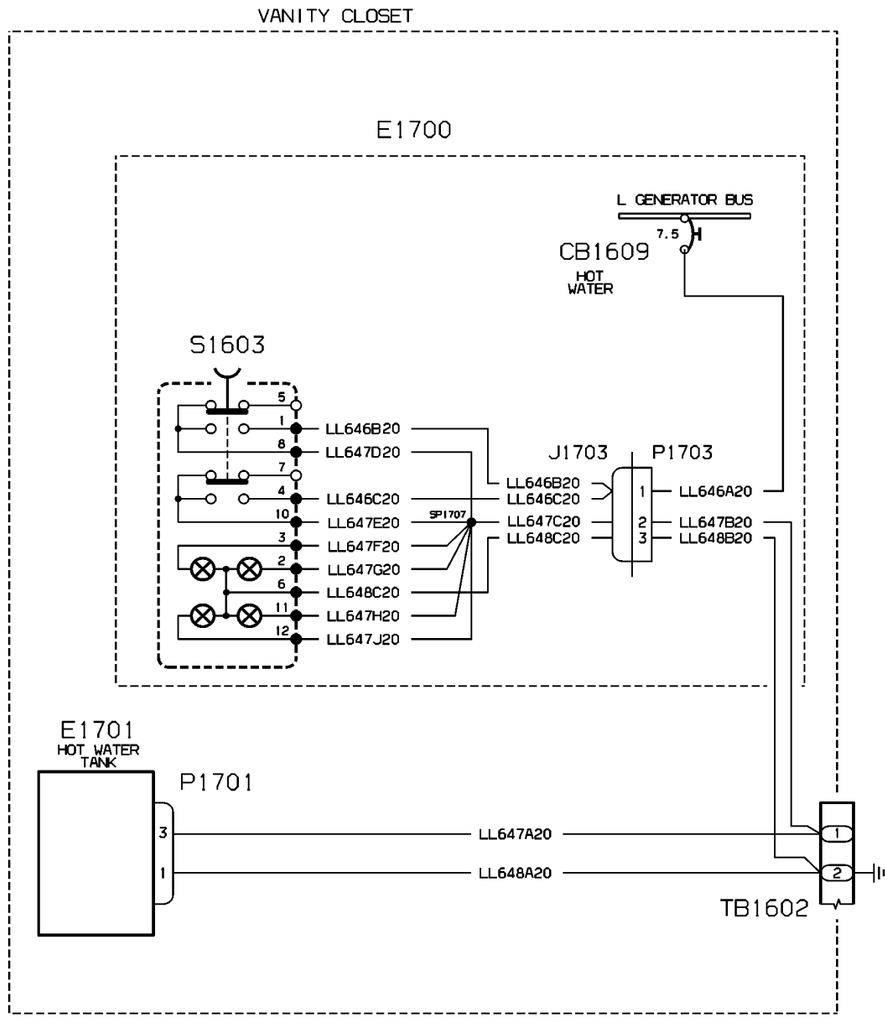


WM_254200_001_01

NOTE: AIRPLANES WITH
OPTION 10 AND 10B
CABIN ARRANGEMENT

80-908012_1/E_2/C

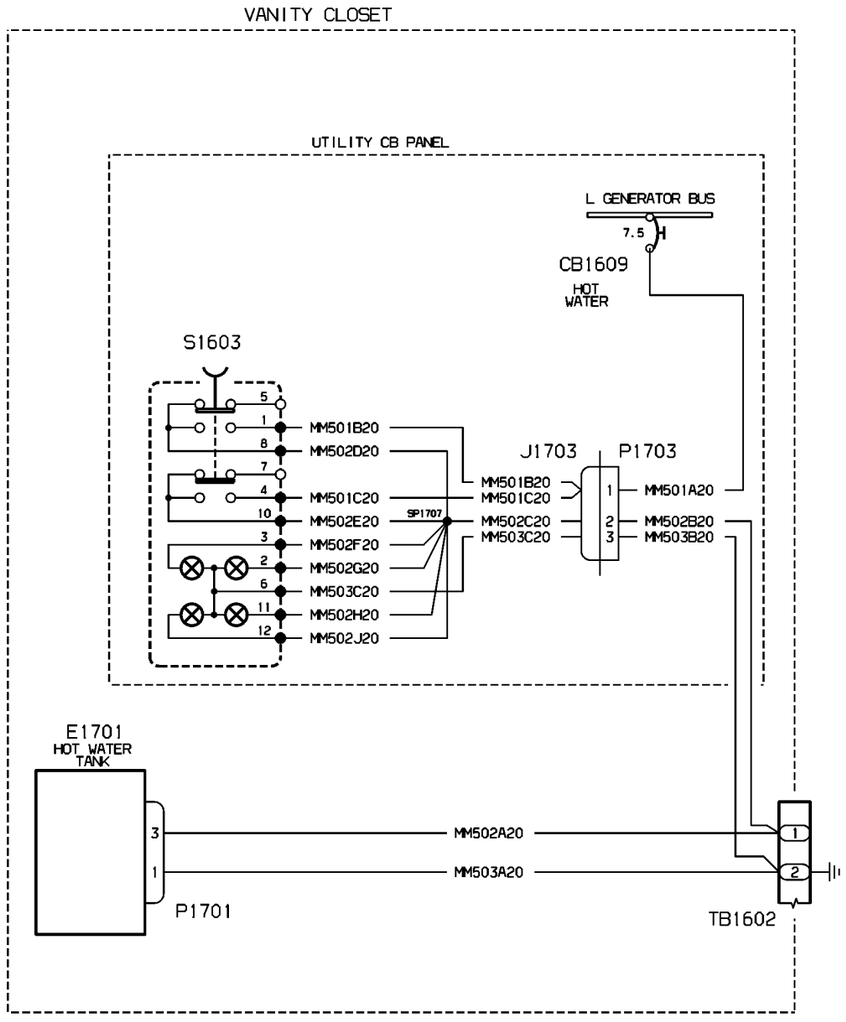


WM_254200_P2_S1

80-908309_1/A

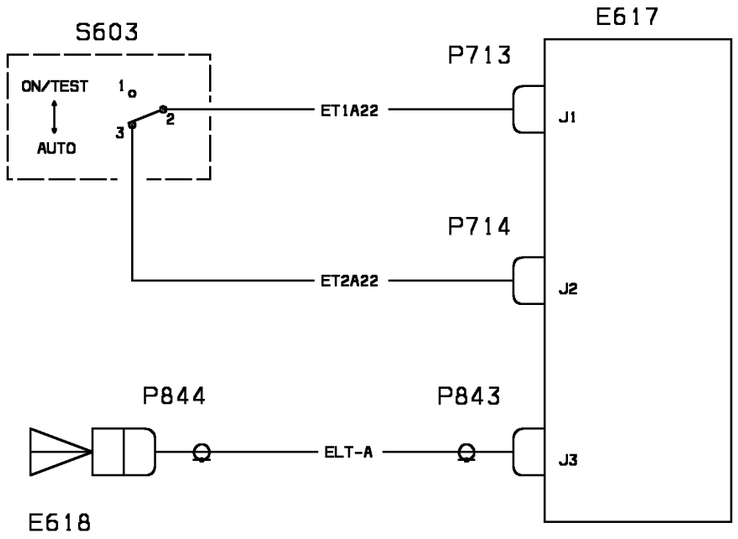


WM_256100YAA

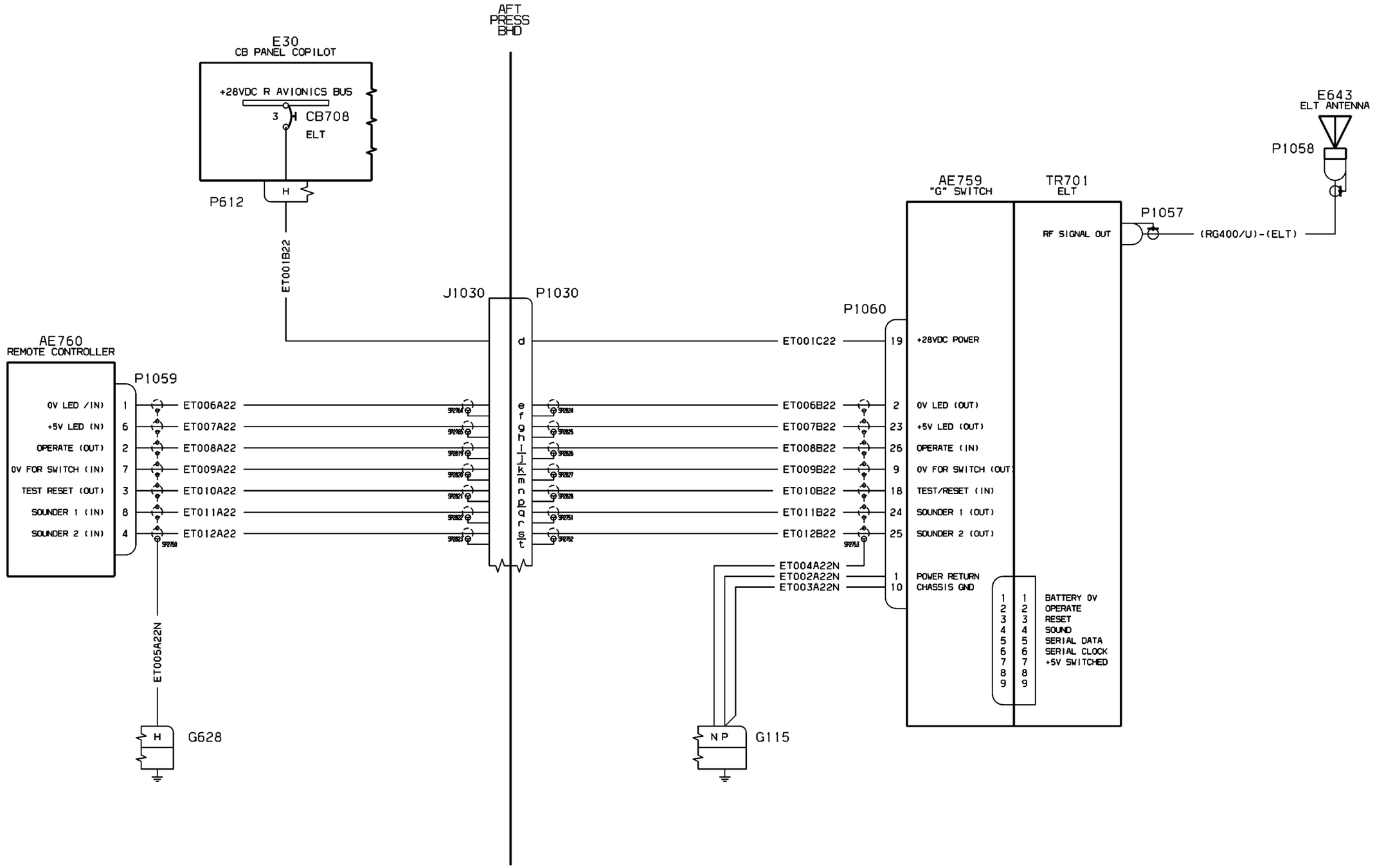


WM_256100KKA1

| EFFECTIVITY: | EMERGENCY<br>E.L.T. System Kit (Optional) |
|---|---|

80M000127_A/1

WM_256100_003_001

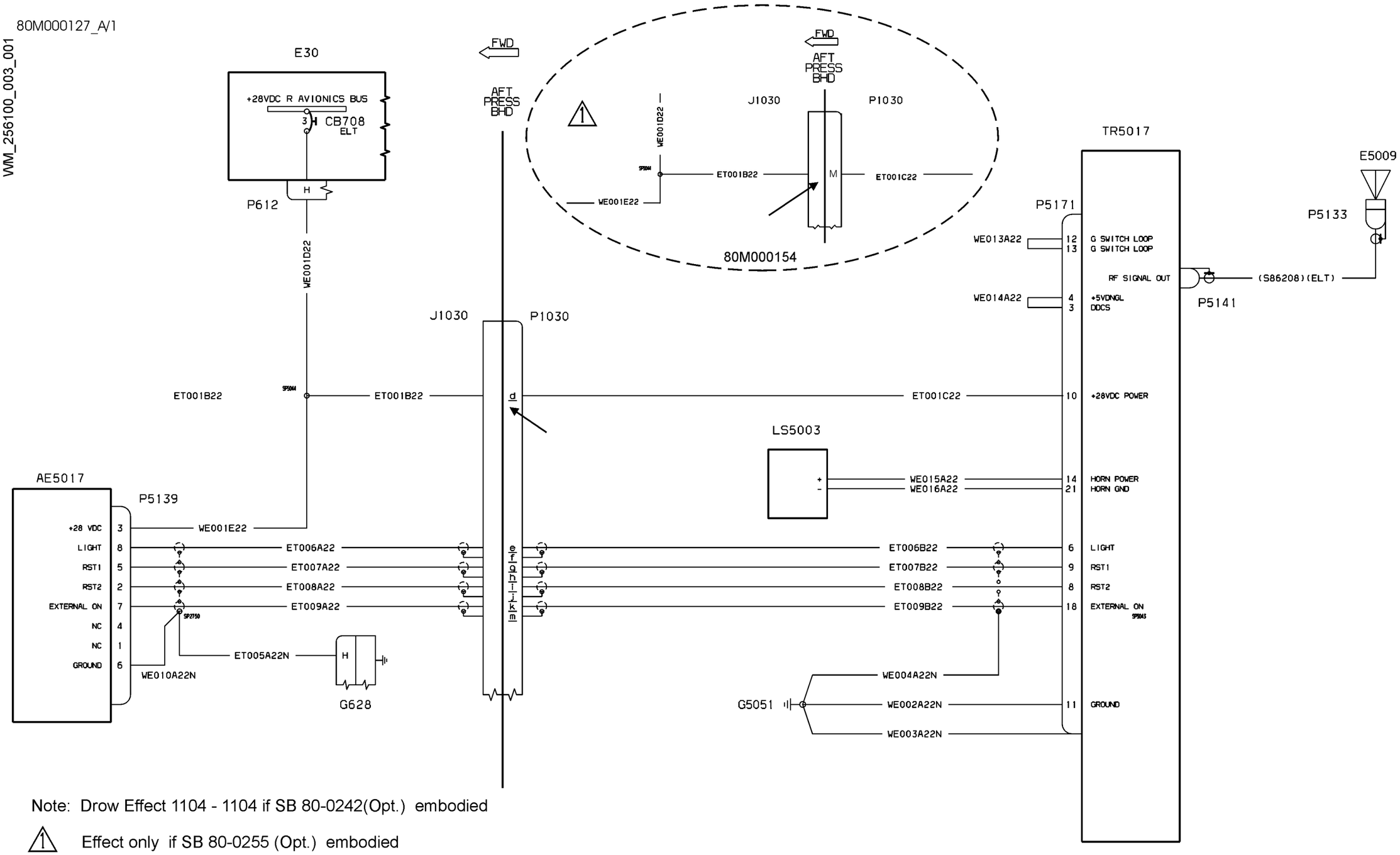


Note: Drow Effect 1104 - 1104 if SB 80-0242(Opt.) embodied

1 Effect only if SB 80-0255 (Opt.) embodied

CHAPTER 26 - FIRE PROTECTION
LIST OF EFFECTIVE PAGES

| CHAPTER SECTION SUBJECT | PAGE | SHEET | DATE |
|---|---|---|---|
| 26 - LOEP | 1 | | Oct. 30/09 |
| | 2 | | Oct. 30/09 |
| 26 - TOC | 1 | | Oct. 30/09 |
| | 2 | | Oct. 30/09 |
| 26-10-00 | 1 | | Oct. 30/09 |
| 26-20-00 | 1 | | Oct. 30/09 |

INTENTIONALLY LEFT BLANK

CHAPTER 26 - FIRE PROTECTION
TABLE OF CONTENTS


| SUBJECT | CHAPTER SECTION SUBJECT | PAGE | SHEET |
|---|---|---|---|
| DETECTION | | | |
| Engine Fire/overheat | 26-10-00 | 1 | |
| EXTINGUISHIN | | | |
| Engine Extinguisher (Optional) | 26-20-00 | 1 | |

INTENTIONALLY LEFT BLANK

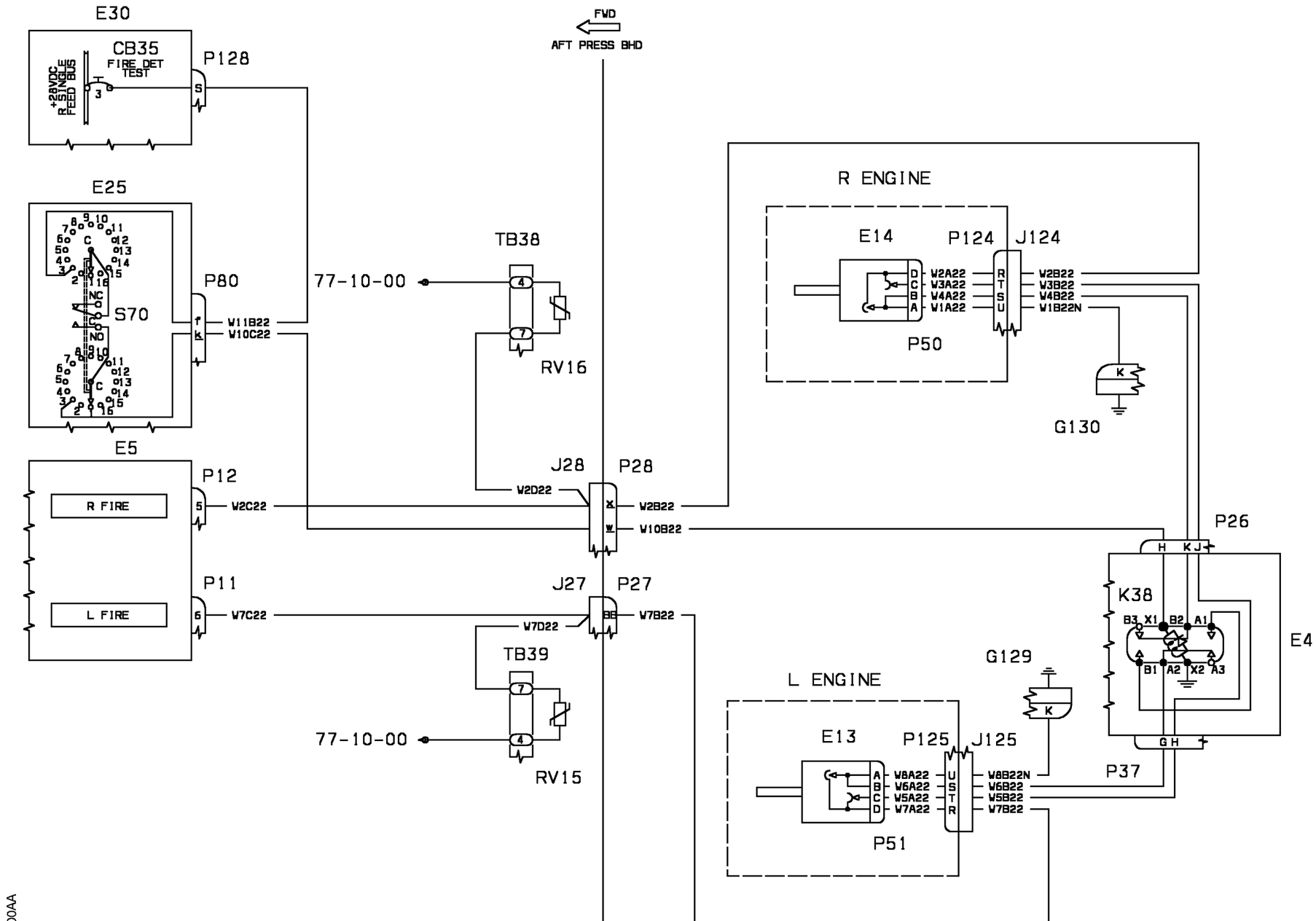


WM_261000AA

| EFFECTIVITY: | DETECTION<br>Engine Fire/overheat |
|---|---|

**26-10-00**

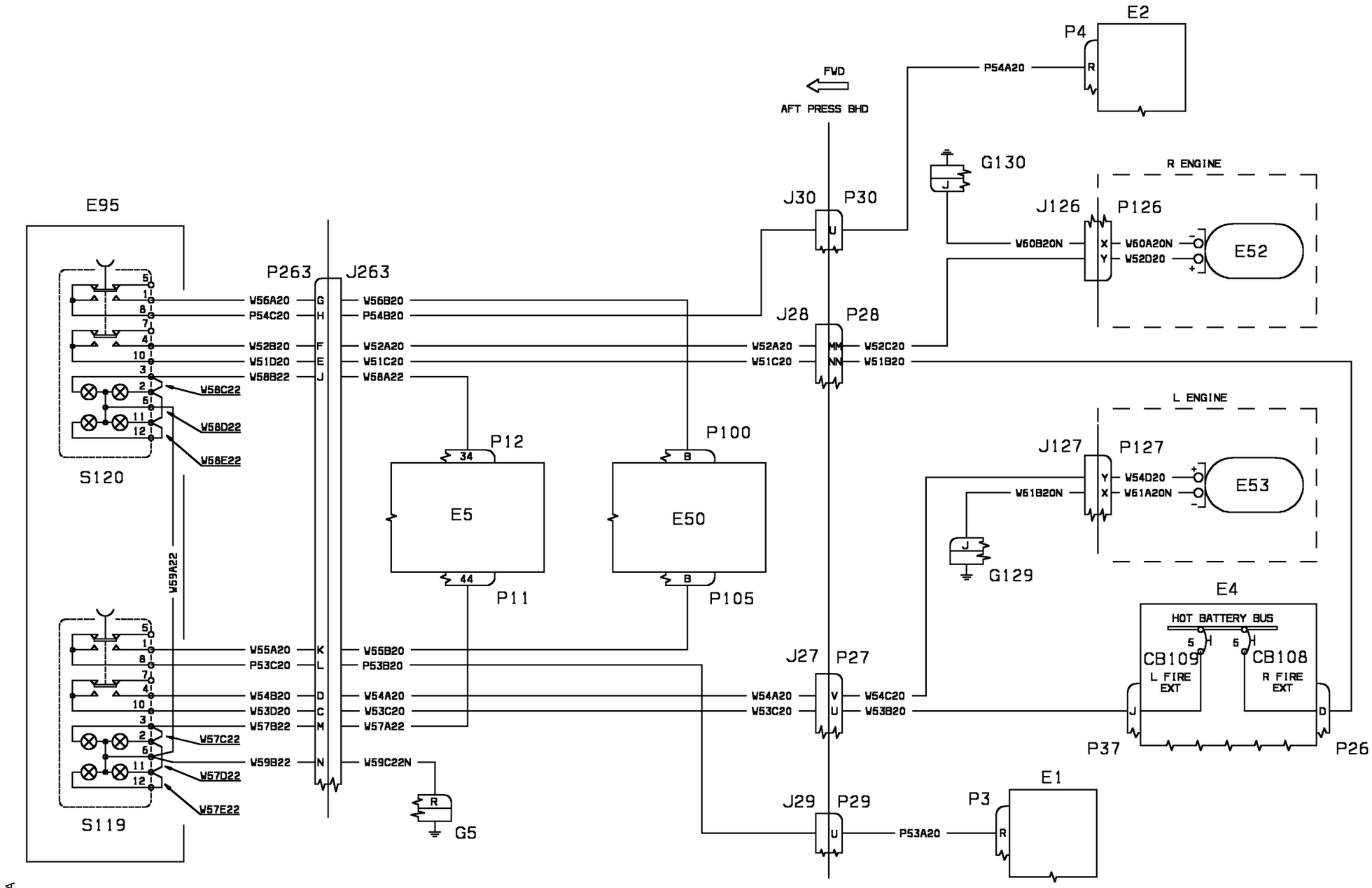


WM_262000AA

| EFFECTIVITY: | EXTINGUISHIN<br>Engine Extinguisher (Optional) |
|---|---|

CHAPTER 27 - FLIGHT CONTROLS
LIST OF EFFECTIVE PAGES

| CHAPTER SECTION SUBJECT | PAGE | SHEET | DATE |
|---|---|---|---|
| 27 - LOEP | 1 | | Oct. 30/09 |
| | 2 | | Oct. 30/09 |
| 27 - TOC | 1 | | Oct. 30/09 |
| | 2 | | Oct. 30/09 |
| 27-00-00 | 1 | 1 | Oct. 30/09 |
| 27-00-00 | 1 | 2 | Oct. 30/09 |
| 27-00-00 | 2 | 1 | Oct. 30/09 |
| 27-00-00 | 2 | 2 | Oct. 30/09 |
| 27-00-00 | 3 | 1 | Oct. 30/09 |
| 27-00-00 | 3 | 2 | Oct. 30/09 |
| 27-32-00 | 1 | | Oct. 30/09 |
| 27-50-00 | 1 | 1 | Oct. 30/09 |
| 27-50-00 | 1 | 2 | Oct. 30/09 |
| 27-50-00 | 2 | 1 | Oct. 30/09 |
| 27-50-00 | 2 | 2 | Oct. 30/09 |
| 27-50-00 | 2 | 3 | Oct. 30/09 |
| 27-50-00 | 3 | 1 | Oct. 30/09 |
| 27-50-00 | 3 | 2 | Oct. 30/09 |
| 27-50-00 | 3 | 3 | Oct. 30/09 |
| 27-50-00 | 4 | 1 | Oct. 30/09 |
| 27-50-00 | 4 | 2 | Oct. 30/09 |
| 27-50-00 | 4 | 3 | Oct. 30/09 |

INTENTIONALLY LEFT BLANK

CHAPTER 27 - FLIGHT CONTROLS
TABLE OF CONTENTS


| SUBJECT | CHAPTER SECTION SUBJECT | PAGE | SHEET |
|---|---|---|---|
| GENERAL | | | |
| Trim System | 27-00-00 | 1 | 1 |
| Trim System | 27-00-00 | 1 | 2 |
| Trim System | 27-00-00 | 2 | 1 |
| Trim System | 27-00-00 | 2 | 2 |
| Trim System | 27-00-00 | 3 | 1 |
| Trim System | 27-00-00 | 3 | 2 |
| ELEVATOR & TAB | | | |
| Stall Warning | 27-32-00 | 1 | |
| FLAPS | | | |
| Flap Control System | 27-50-00 | 1 | 1 |
| Flap Control System | 27-50-00 | 1 | 2 |
| Flap Control System | 27-50-00 | 2 | 1 |
| Flap Control System | 27-50-00 | 2 | 2 |
| Flap Control System | 27-50-00 | 2 | 3 |
| Flap Control System | 27-50-00 | 3 | 1 |
| Flap Control System | 27-50-00 | 3 | 2 |
| Flap Control System | 27-50-00 | 3 | 3 |
| Flap Control System | 27-50-00 | 4 | 1 |
| Flap Control System | 27-50-00 | 4 | 2 |
| Flap Control System | 27-50-00 | 4 | 3 |

INTENTIONALLY LEFT BLANK

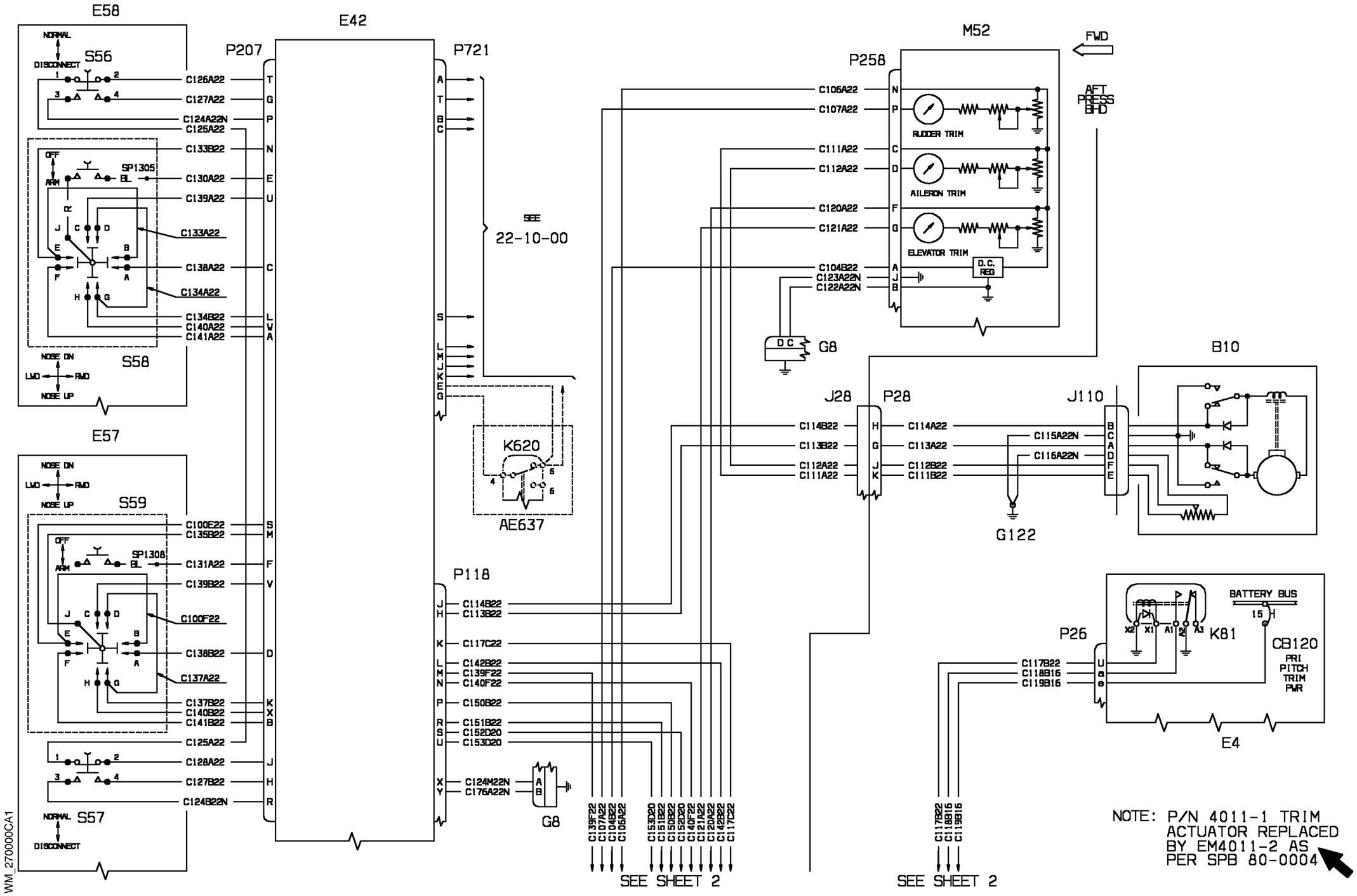


| EFFECTIVITY: | GENERAL |
|---|---|
| 1004-1018 | Trim System |

**27-00-00**

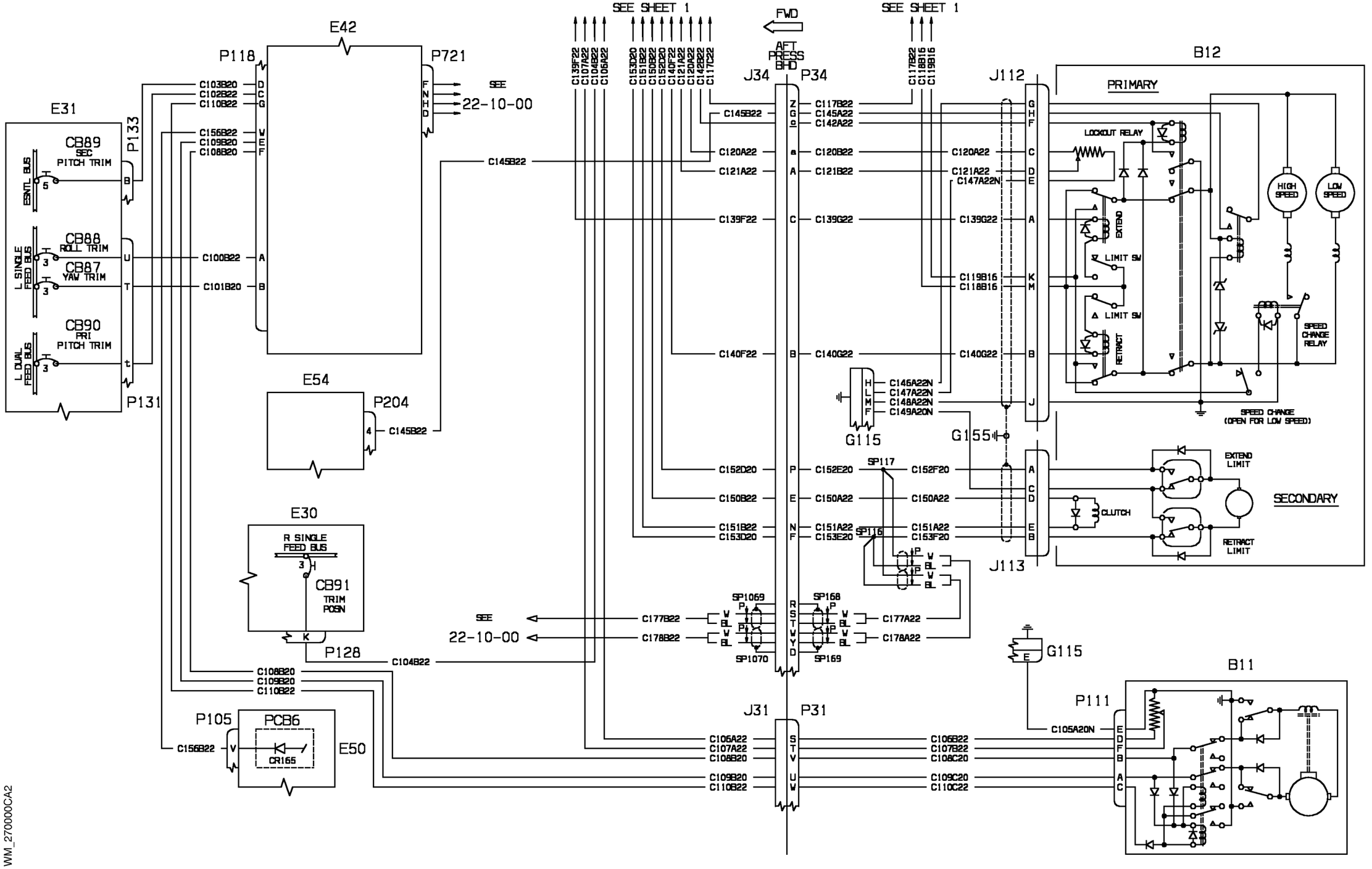


WM_270000CA2

80-008509_1F

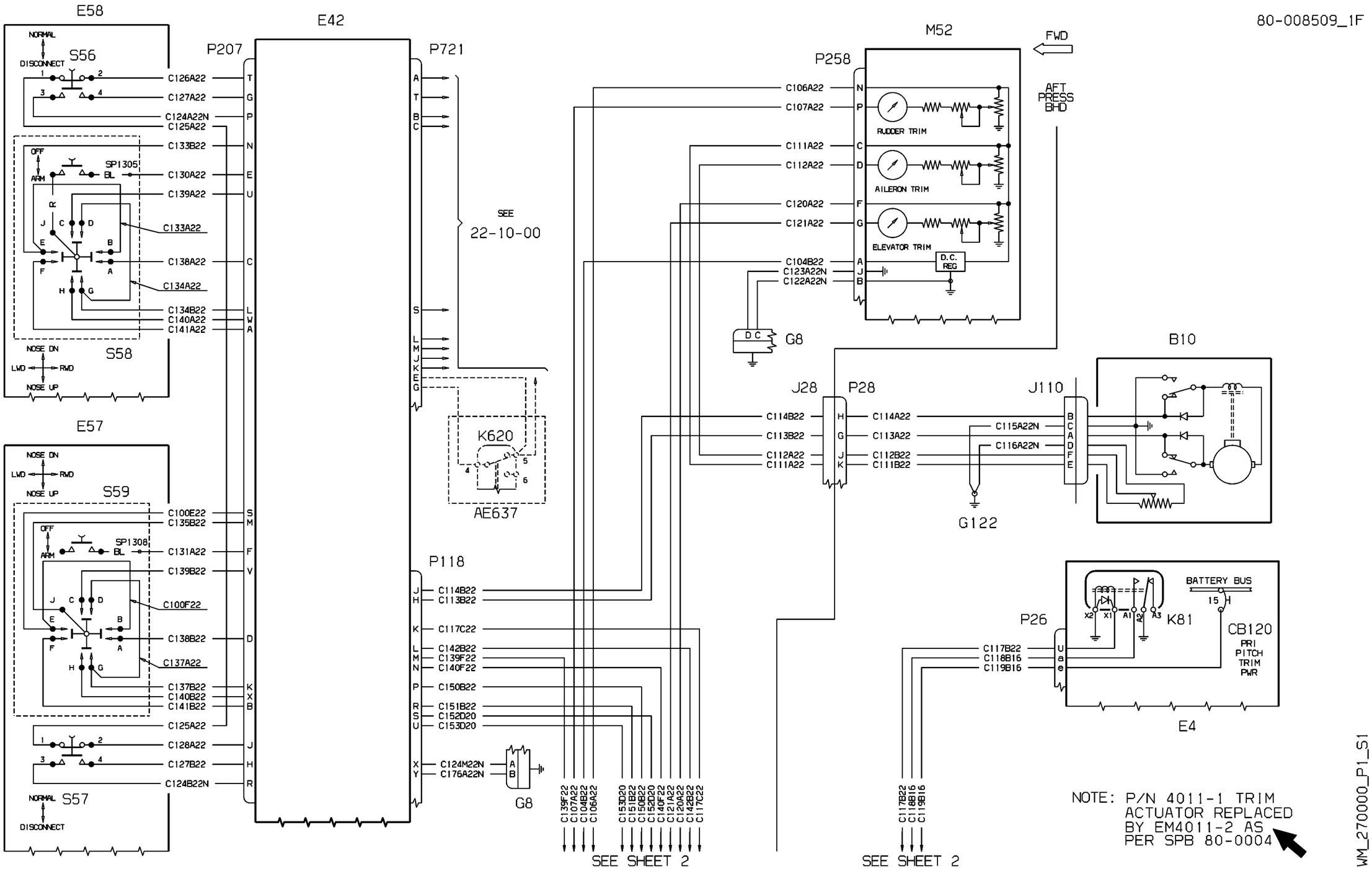
E58
NORMAL
DISCONNECT
S56
C126A22
C127A22
C124A22N
C125A22
C133B22
C130A22
C139A22
C133A22
C138A22
C134A22
C134B22
C140A22
C141A22
NOSE DN
LWD
RWD
NOSE UP
S58
E57
S59
C100E22
C135B22
C131A22
C139B22
C100F22
C138B22
C137A22
C137B22
C140B22
C141B22
C125A22
C128A22
C127B22
C124B22N
S57
E42
P207
P721
SEE
22-10-00
K620
AE637
P118
C114B22
C113B22
C117C22
C142B22
C139F22
C140F22
C150B22
C151B22
C152D20
C153D20
C124M22N
C176A22N
G8
C139F22
C107A22
C104B22
C106A22
C153D20
C151B22
C150B22
C152D20
C140F22
C121A22
C120A22
C142B22
C117C22
SEE SHEET 2
M52
FWD
P258
AFT
PRESS
BHD
C106A22
C107A22
C111A22
C112A22
C120A22
C121A22
C104B22
C123A22N
C122A22
RUDDER TRIM
AILERON TRIM
ELEVATOR TRIM
D.C.
REG
D C
G8
J28
P28
J110
B10
C114B22
C113B22
C112A22
C111A22
C114A22
C113A22
C112B22
C111B22
C115A22N
C116A22N
G122
P26
BATTERY BUS
15
K81
CB120
PRI
PITCH
TRIM
PWR
E4
C117B22
C118B16
C119B16
SEE SHEET 2
NOTE: P/N 4011-1 TRIM
ACTUATOR REPLACED
BY EM4011-2 AS
PER SPB 80-0004
WM_270000_P1_S1

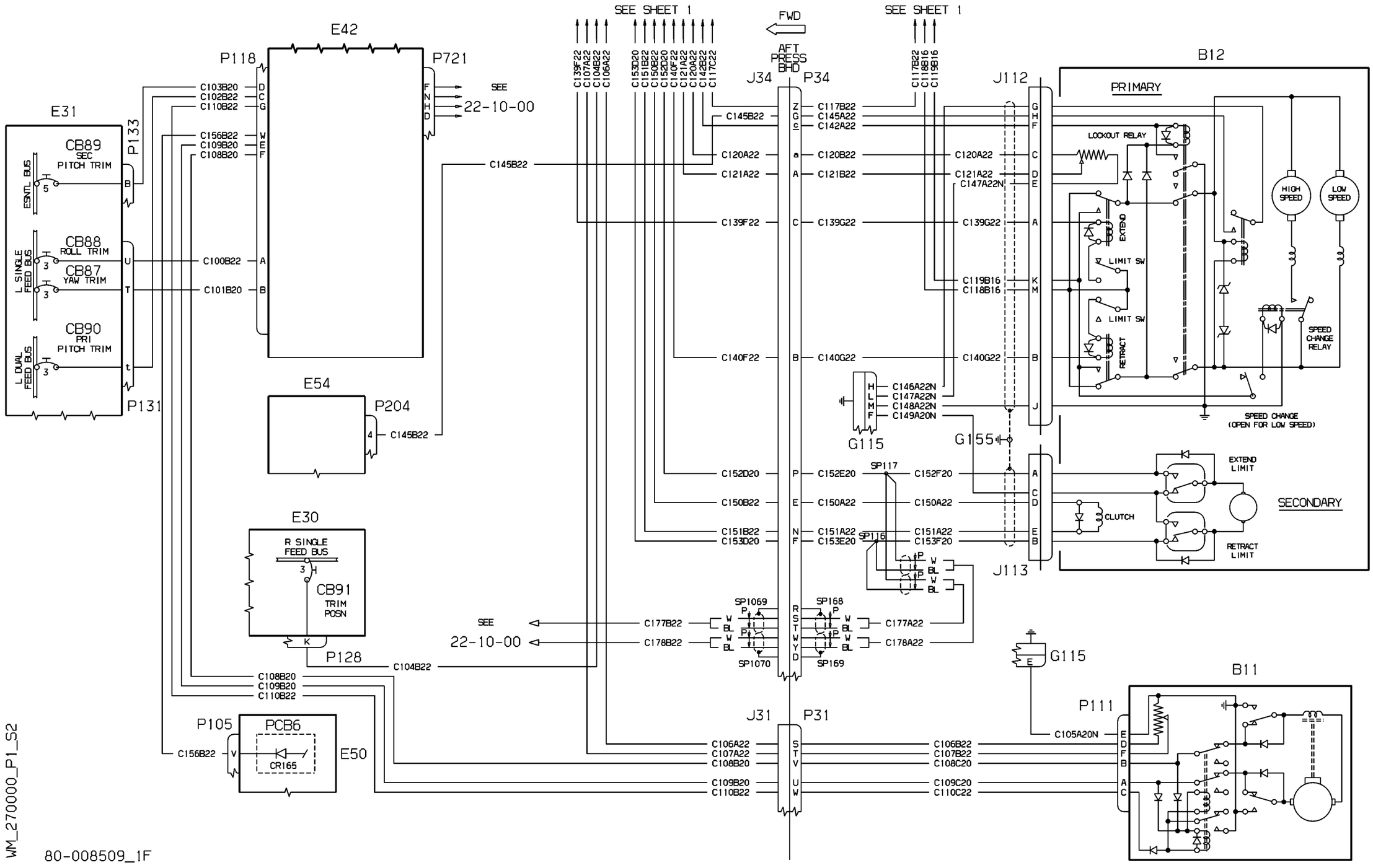
SEE SHEET 1
SEE SHEET 1
FWD
AFT PRESS BHD
E42
P118
P721
E31
CB89 SEC PITCH TRIM
CB88 ROLL TRIM
CB87 YAW TRIM
CB90 PRI PITCH TRIM
ESNTL BUS
L SINGLE FEED BUS
L DUAL FEED BUS
P133
P131
E54
P204
E30
R SINGLE FEED BUS
CB91 TRIM POSN
P128
P105
PCB6
CR165
E50
J34
P34
J31
P31
J112
J113
G115
G155
B12
PRIMARY
SECONDARY
LOCKOUT RELAY
HIGH SPEED
LOW SPEED
EXTEND
RETRACT
LIMIT SW
SPEED CHANGE RELAY
SPEED CHANGE (OPEN FOR LOW SPEED)
EXTEND LIMIT
RETRACT LIMIT
CLUTCH
B11
P111
SP117
SP116
SP1069
SP1070
SP168
SP169
SEE 22-10-00
SEE 22-10-00
C103B20
C102B22
C110B22
C156B22
C109B20
C108B20
C100B22
C101B20
C145B22
C104B22
C139F22
C107A22
C104B22
C106A22
C153D20
C151B22
C150B22
C152D20
C140F22
C121A22
C120A22
C142B22
C117C22
C145B22
C120A22
C121A22
C139F22
C140F22
C152D20
C150B22
C151B22
C153D20
C177B22
C178B22
C117B22
C145A22
C142A22
C120B22
C121B22
C139G22
C140G22
C152E20
C150A22
C151A22
C153E20
C177A22
C178A22
C146A22N
C147A22N
C148A22N
C149A20N
C147A22N
C119B16
C118B16
C152F20
C150A22
C151A22
C153F20
C106A22
C107A22
C108B20
C109B20
C110B22
C106B22
C107B22
C108C20
C109C20
C110C22
C105A20N
WM_270000_P1_S2
80-008509_1F

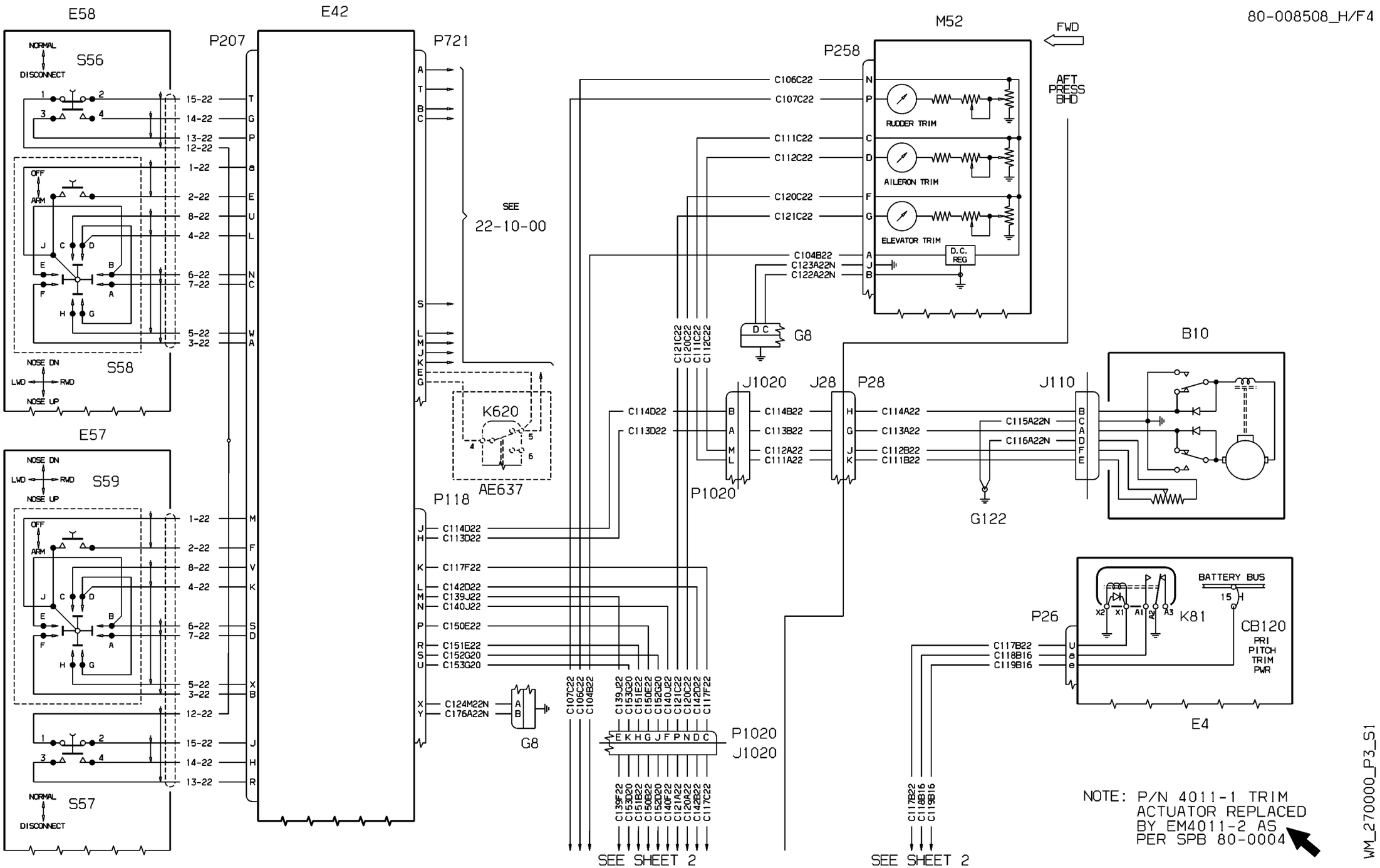


| EFFECTIVITY: 1034-1104 | GENERAL Trim System |
|---|---|

**27-00-00**

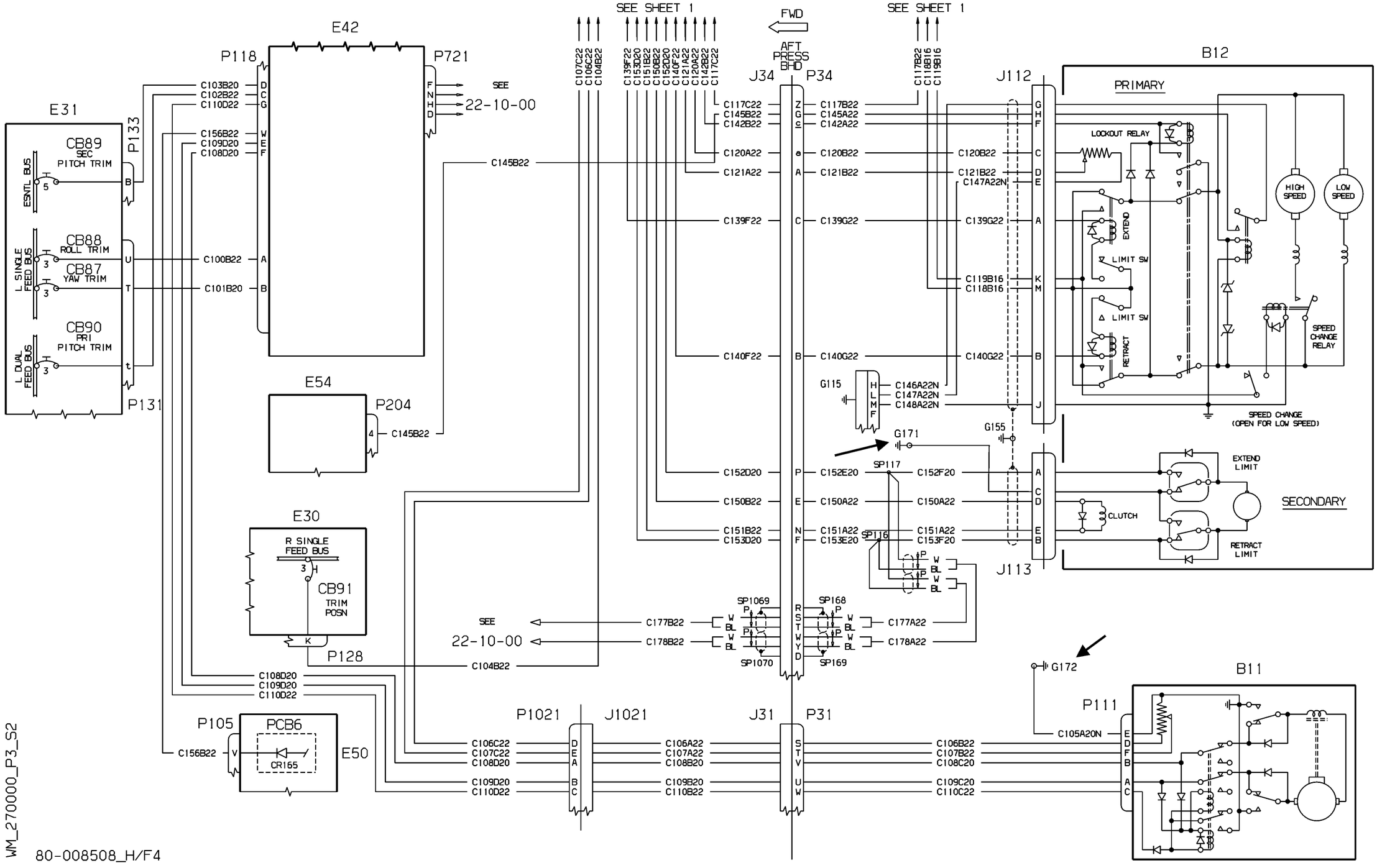
SEE SHEET 1
SEE SHEET 1
FWD
AFT PRESS BHD
E42
P118
P721
SEE 22-10-00
E31
CB89 SEC PITCH TRIM
CB88 ROLL TRIM
CB87 YAW TRIM
CB90 PRI PITCH TRIM
ESNTL BUS
L SINGLE FEED BUS
L DUAL FEED BUS
P133
P131
E54
P204
E30
R SINGLE FEED BUS
CB91 TRIM POSN
P128
P105
PCB6
CR165
E50
J34
P34
J112
J113
B12
PRIMARY
SECONDARY
LOCKOUT RELAY
HIGH SPEED
LOW SPEED
EXTEND
RETRACT
LIMIT SW
SPEED CHANGE RELAY
SPEED CHANGE (OPEN FOR LOW SPEED)
EXTEND LIMIT
RETRACT LIMIT
CLUTCH
G115
G171
G155
SP117
SP116
SP1069
SP1070
SP168
SP169
G172
B11
P111
P1021
J1021
J31
P31
WM_270000_P3_S2
80-008508_H/F4

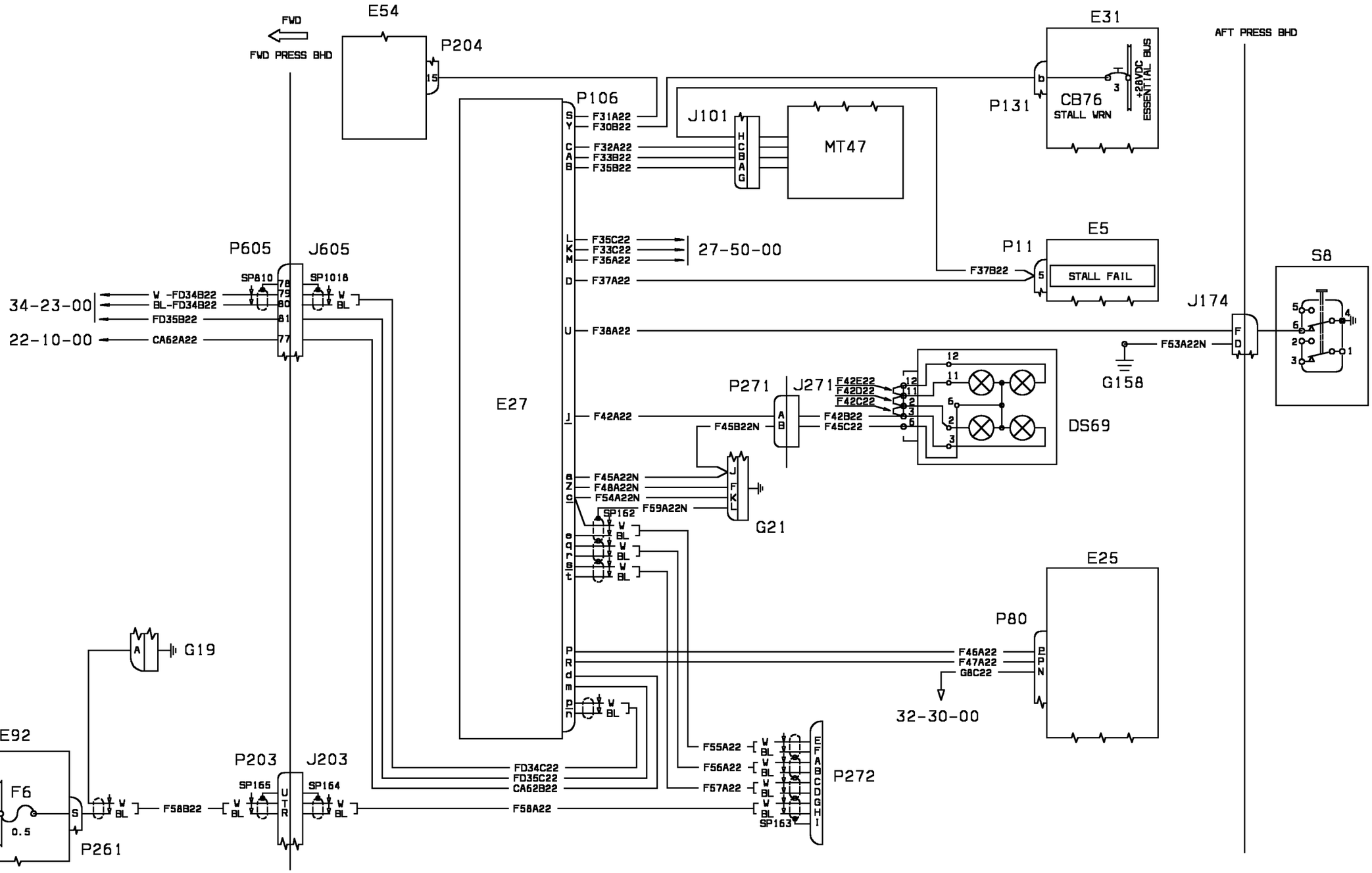


| EFFECTIVITY: | ELEVATOR & TAB<br>Stall Warning |
|---|---|

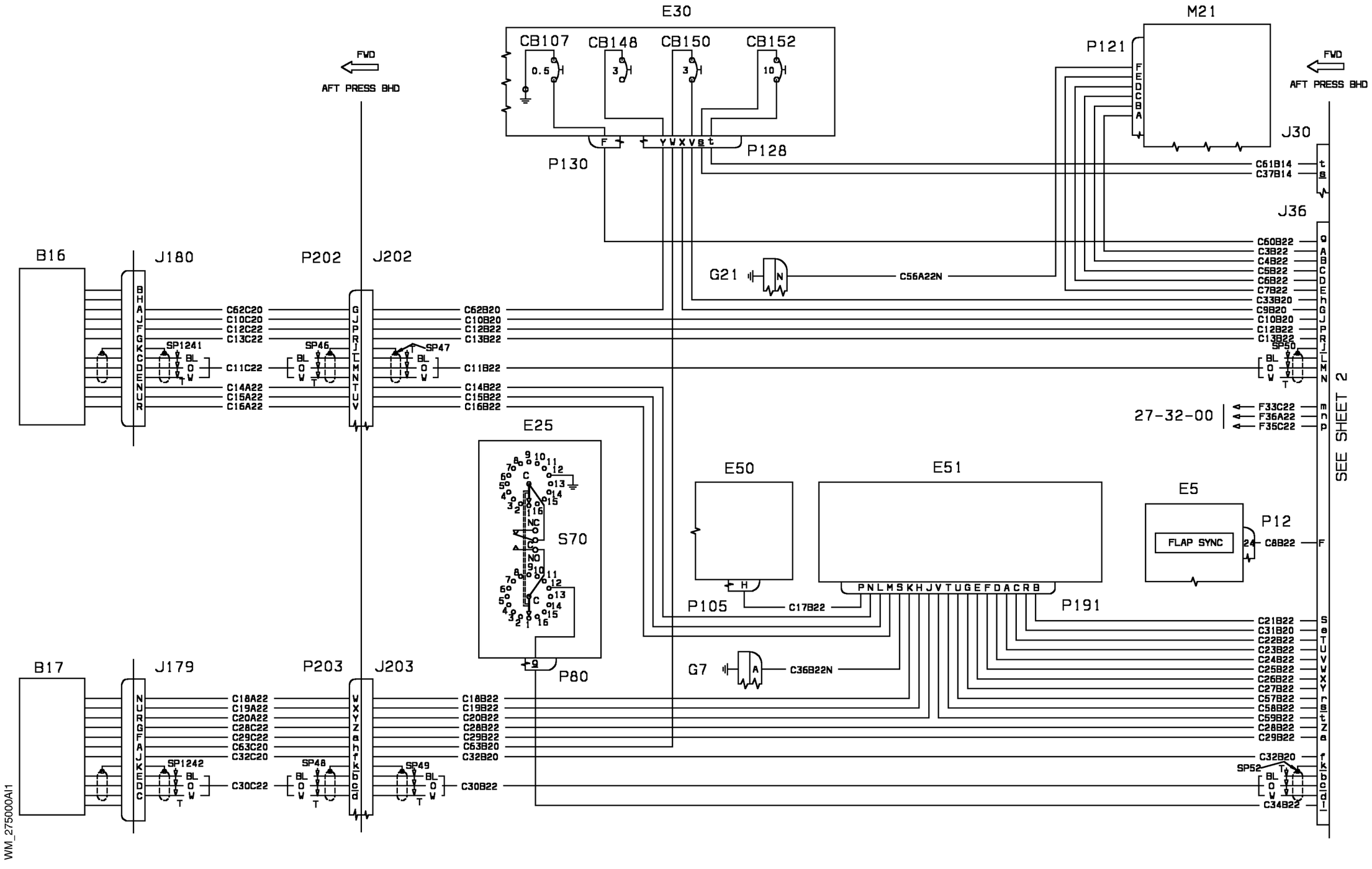


| EFFECTIVITY: 1004-1007 | FLAPS<br>Flap Control System |
|---|---|

**27-50-00**

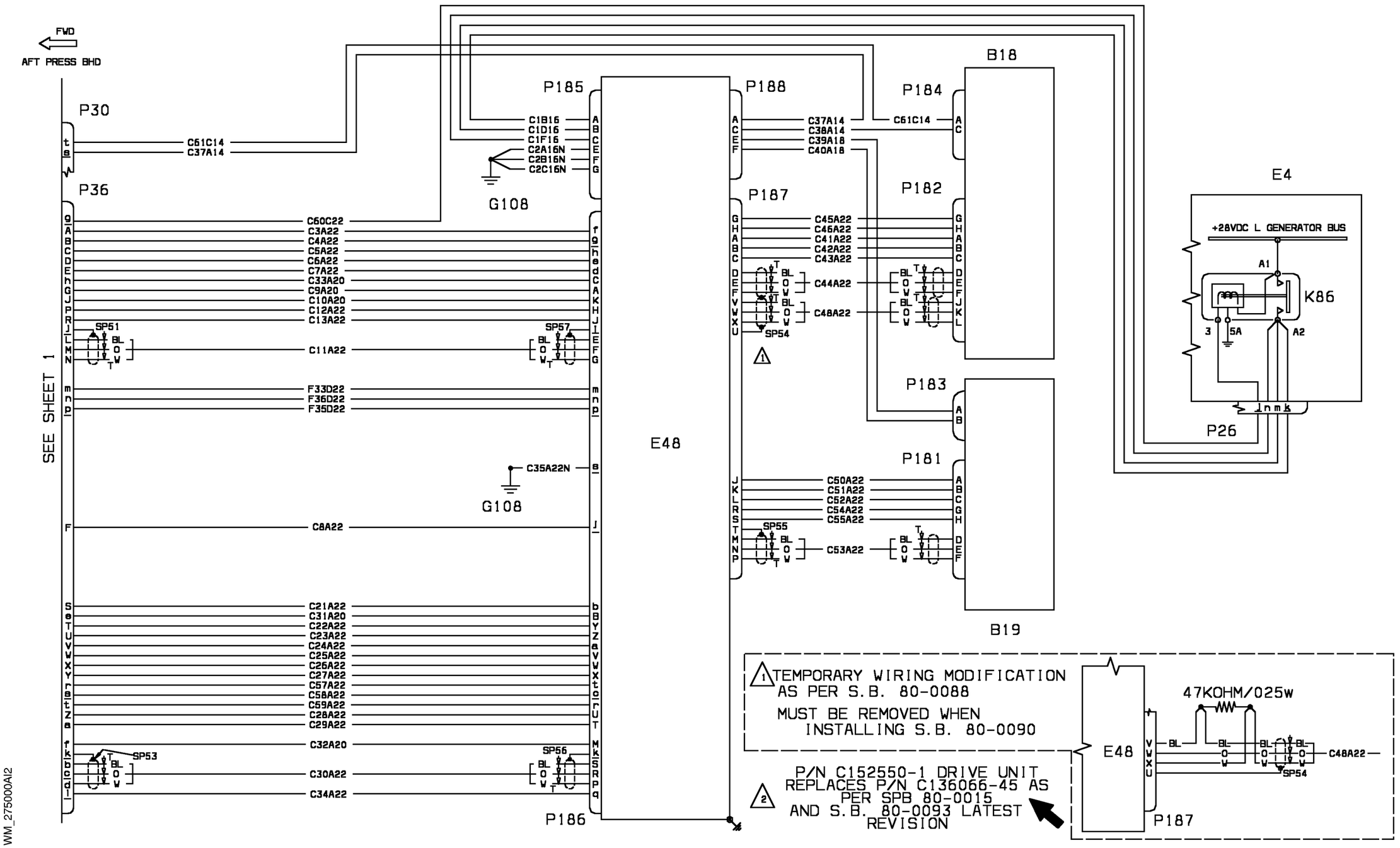


WM_275000AI2

| EFFECTIVITY: | FLAPS |
|---|---|
| 1004-1007 | Flap Control System |

**27-50-00**

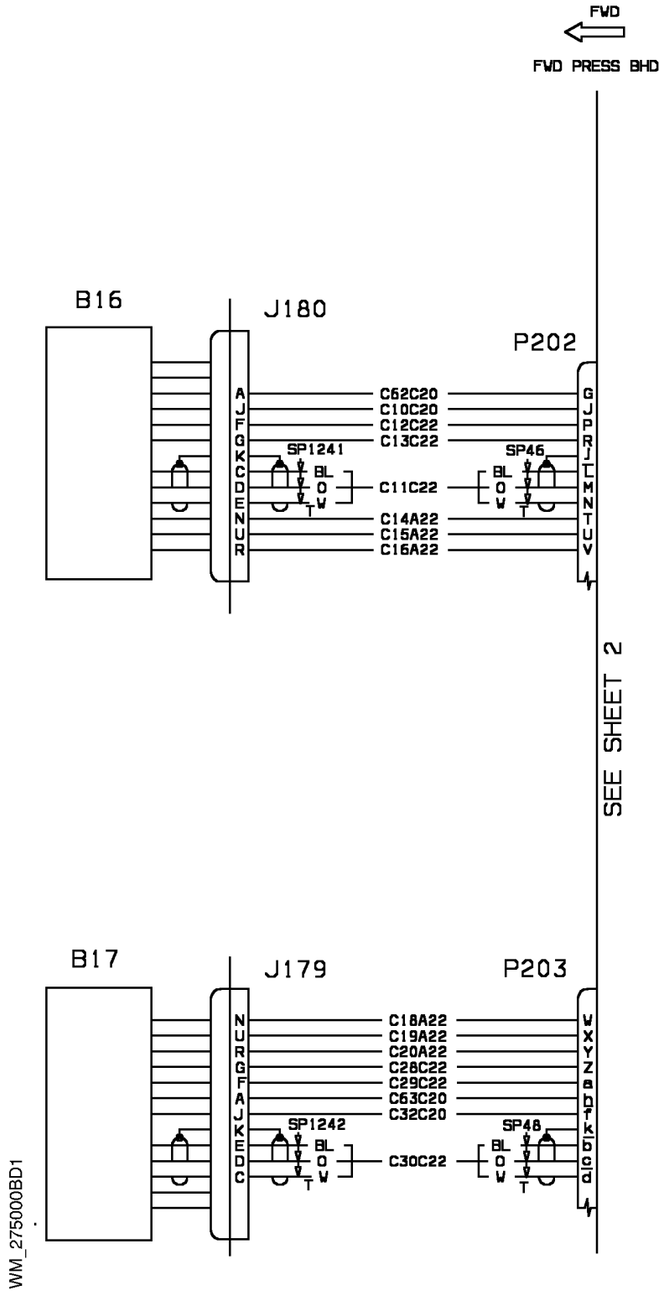


| EFFECTIVITY: 1008-1033 | FLAPS<br>Flap Control System |
|---|---|

**27-50-00**

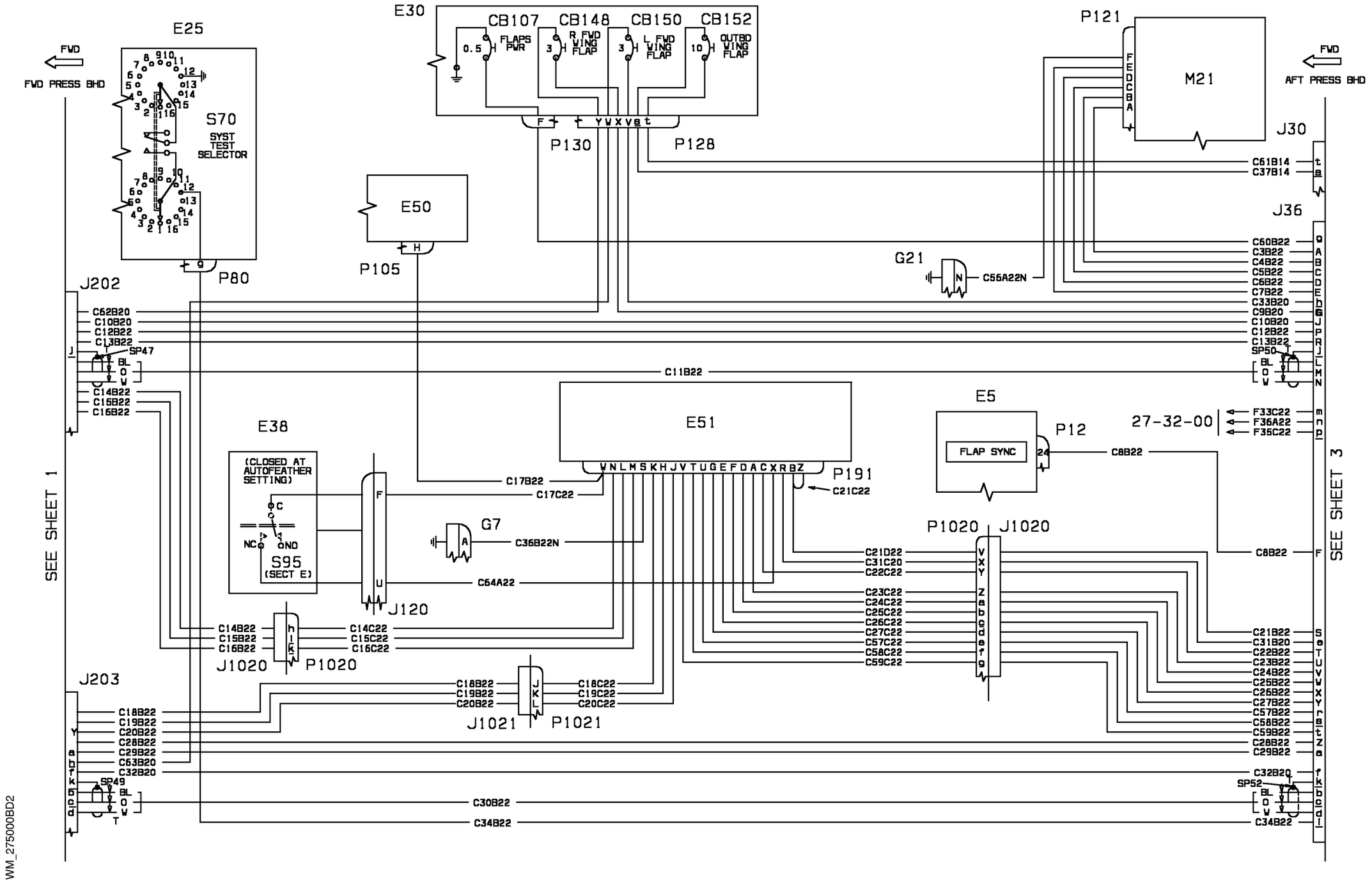


WM_275000BD2

| EFFECTIVITY: | FLAPS |
|---|---|
| 1034-1091,1096 | Flap Control System |

**27-50-00**

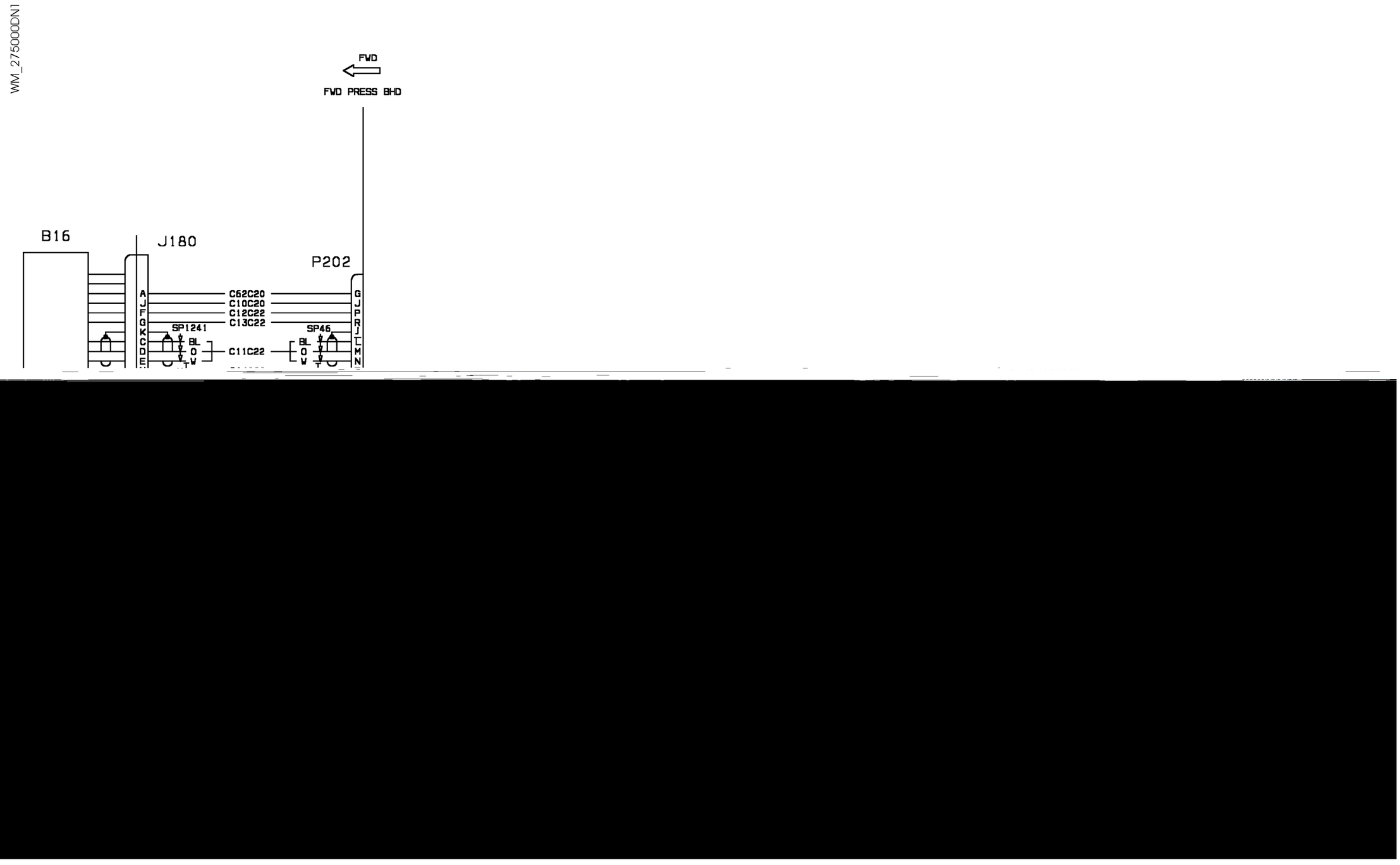
WM_275000DN1
FWD
FWD PRESS BHD
B16
J180
P202
C62C20
C10C20
C12C22
C13C22
C11C22
SP1241
SP45
BL
O
W
A
J
F
G
K
C
D
E
G
J
P
R
L
M
N

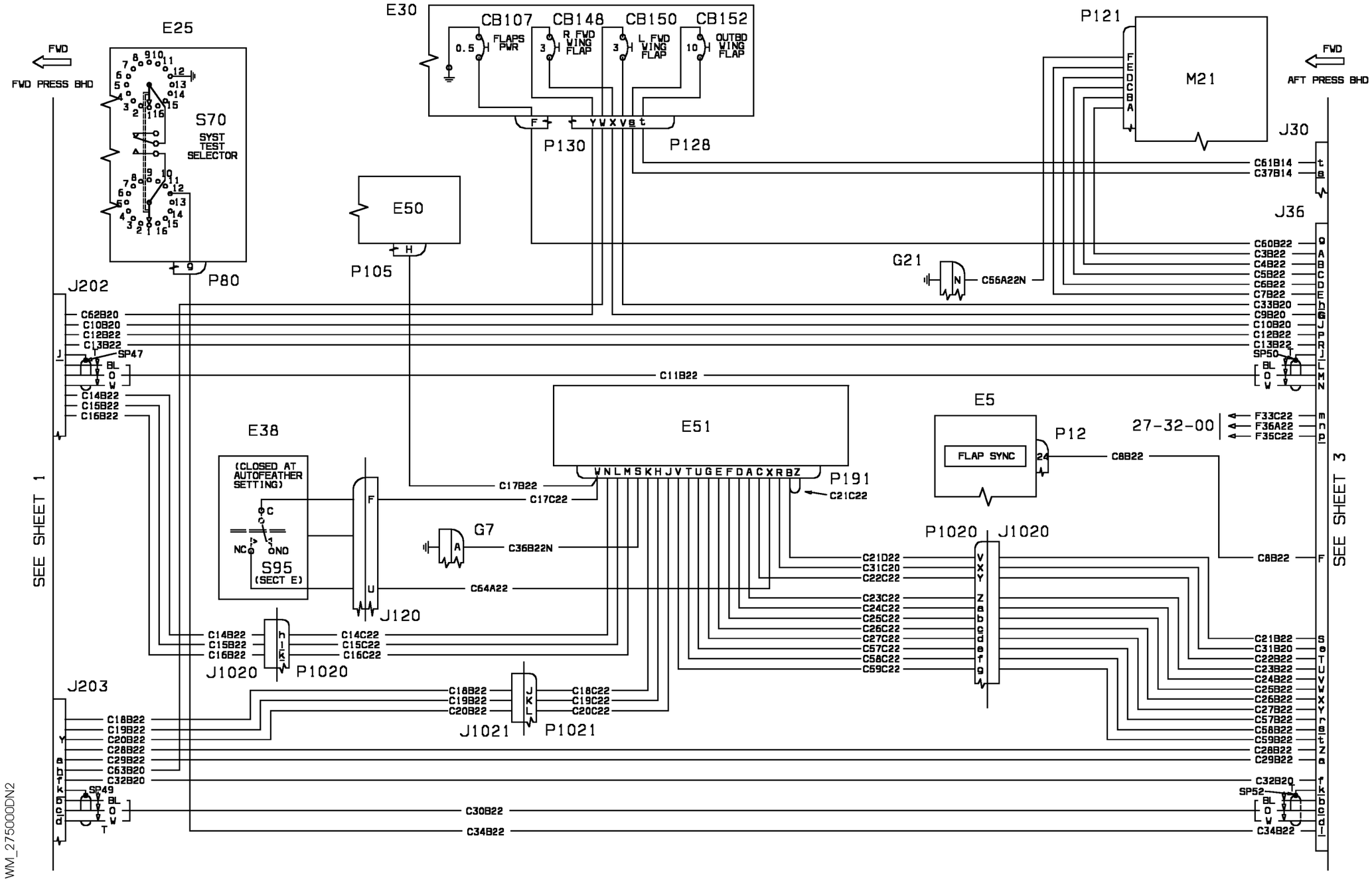
E25
FWD
FWD PRESS BHD
S70
SYST TEST SELECTOR
P80
E30
CB107
CB148
CB150
CB152
0.5 FLAPS PWR
3 R FWD WING FLAP
3 L FWD WING FLAP
10 OUTBD WING FLAP
P130
P128
P121
M21
FWD
AFT PRESS BHD
J30
J36
C61B14
C37B14
E50
P105
G21
C56A22N
C60B22
C3B22
C4B22
C5B22
C6B22
C7B22
C33B20
C9B20
C10B20
C12B22
C13B22
SP50
J202
C62B20
C10B20
C12B22
C13B22
SP47
C11B22
C14B22
C15B22
C16B22
E38
(CLOSED AT AUTOFEATHER SETTING)
S95
(SECT E)
J120
E51
C17B22
C17C22
P191
C21C22
G7
C36B22N
C64A22
E5
P12
FLAP SYNC
C8B22
27-32-00
F33C22
F36A22
F35C22
P1020
J1020
C21D22
C31C20
C22C22
C23C22
C24C22
C25C22
C26C22
C27C22
C57C22
C58C22
C59C22
C14B22
C15B22
C16B22
C14C22
C15C22
C16C22
J1020
P1020
C18B22
C19B22
C20B22
C18C22
C19C22
C20C22
J1021
P1021
J203
C18B22
C19B22
C20B22
C28B22
C29B22
C63B20
C32B20
SP49
C30B22
C34B22
C21B22
C31B20
C22B22
C23B22
C24B22
C25B22
C26B22
C27B22
C57B22
C58B22
C59B22
C28B22
C29B22
C32B20
SP52
C34B22
SEE SHEET 1
SEE SHEET 3
WM_275000DN2

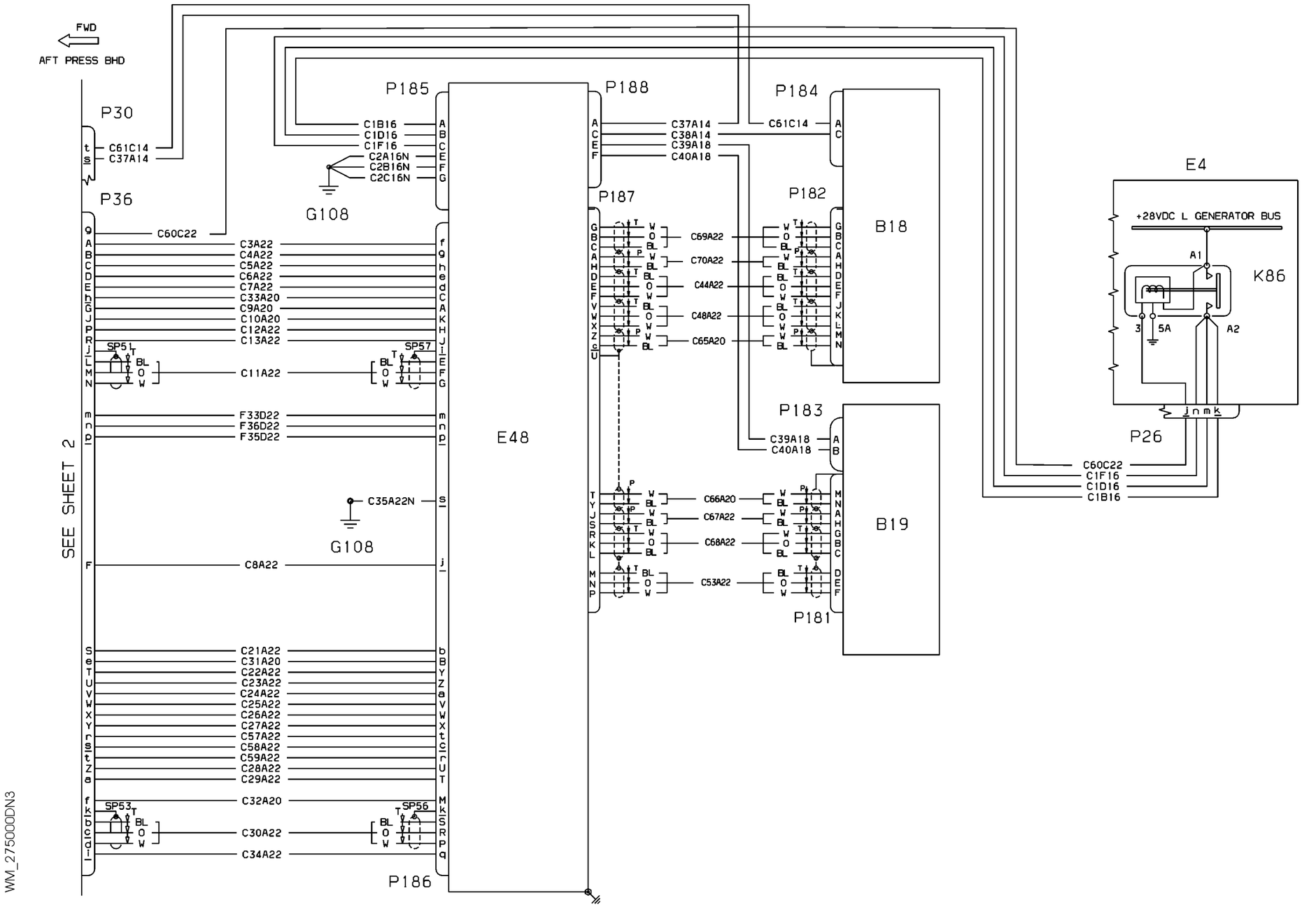


| EFFECTIVITY: 1092-1095,1097-1104 | FLAPS Flap Control System |
|---|---|

27-50-00

CHAPTER 28 - FUEL
LIST OF EFFECTIVE PAGES

| CHAPTER SECTION SUBJECT | PAGE | SHEET | DATE |
|---|---|---|---|
| 28 - LOEP | 1 | | Mar. 19/12 |
| | 2 | | Mar. 19/12 |
| 28 - TOC | 1 | | Mar. 19/12 |
| | 2 | | Mar. 19/12 |
| 28-13-00 | 1 | | Oct. 30/09 |
| 28-20-00 | 1 | 1 | Oct. 30/09 |
| 28-20-00 | 1 | 2 | Oct. 30/09 |
| 28-20-00 | 2 | 1 | Oct. 30/09 |
| 28-20-00 | 2 | 2 | Oct. 30/09 |
| 28-41-00 | 1 | | Mar. 19/12 |
| 28-41-00 | 2 | | Oct. 30/09 |
| 28-41-00 | 3 | | Mar. 19/12 |

INTENTIONALLY LEFT BLANK

CHAPTER 28 - FUEL
TABLE OF CONTENTS


| SUBJECT | CHAPTER SECTION SUBJECT | PAGE | SHEET |
|---|---|---|---|
| STORAGE | | | |
| Pressure Refuelling System | 28-13-00 | 1 | |
| DISTRIBUTION | | | |
| Distribution System | 28-20-00 | 1 | 1 |
| Distribution System | 28-20-00 | 1 | 2 |
| Distribution System | 28-20-00 | 2 | 1 |
| Distribution System | 28-20-00 | 2 | 2 |
| INDICATING | | | |
| Indication Of Quantity | 28-41-00 | 1 | |
| Indication Of Quantity | 28-41-00 | 2 | |
| Indication Of Quantity | 28-41-00 | 3 | |

INTENTIONALLY LEFT BLANK

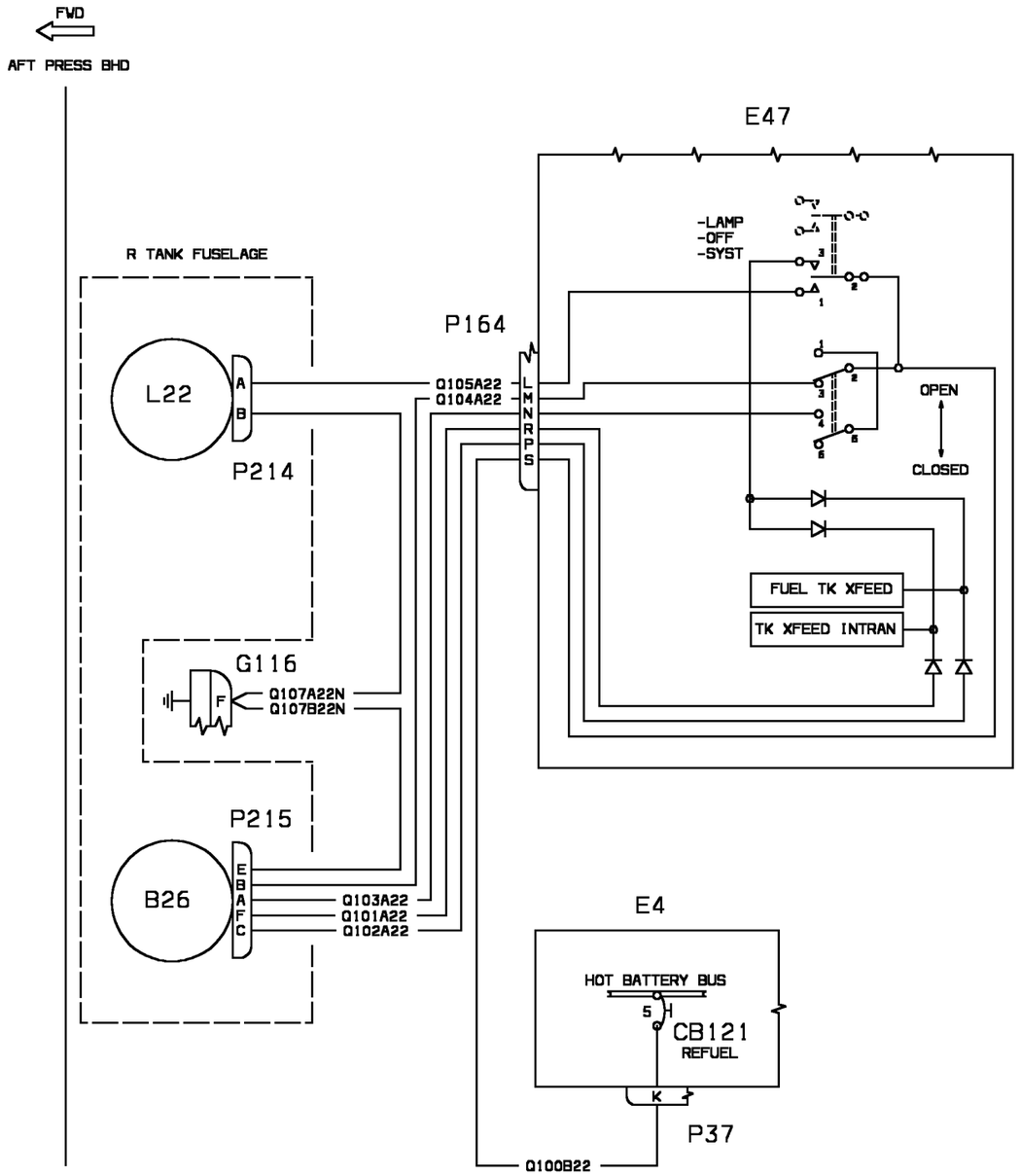
FWD
AFT PRESS BHD
E47
R TANK FUSELAGE
-LAMP
-OFF
-SYST
P164
L22
A
B
Q105A22
Q104A22
L
M
N
R
P
S
OPEN
CLOSED
P214
FUEL TK XFEED
TK XFEED INTRAN
G116
F
Q107A22N
Q107B22N
P215
B26
E
B
A
F
C
Q103A22
Q101A22
Q102A22
E4
HOT BATTERY BUS
5
H
CB121
REFUEL
K
P37
Q100B22

WM_281300AA

EFFECT. 1054 TO 9999

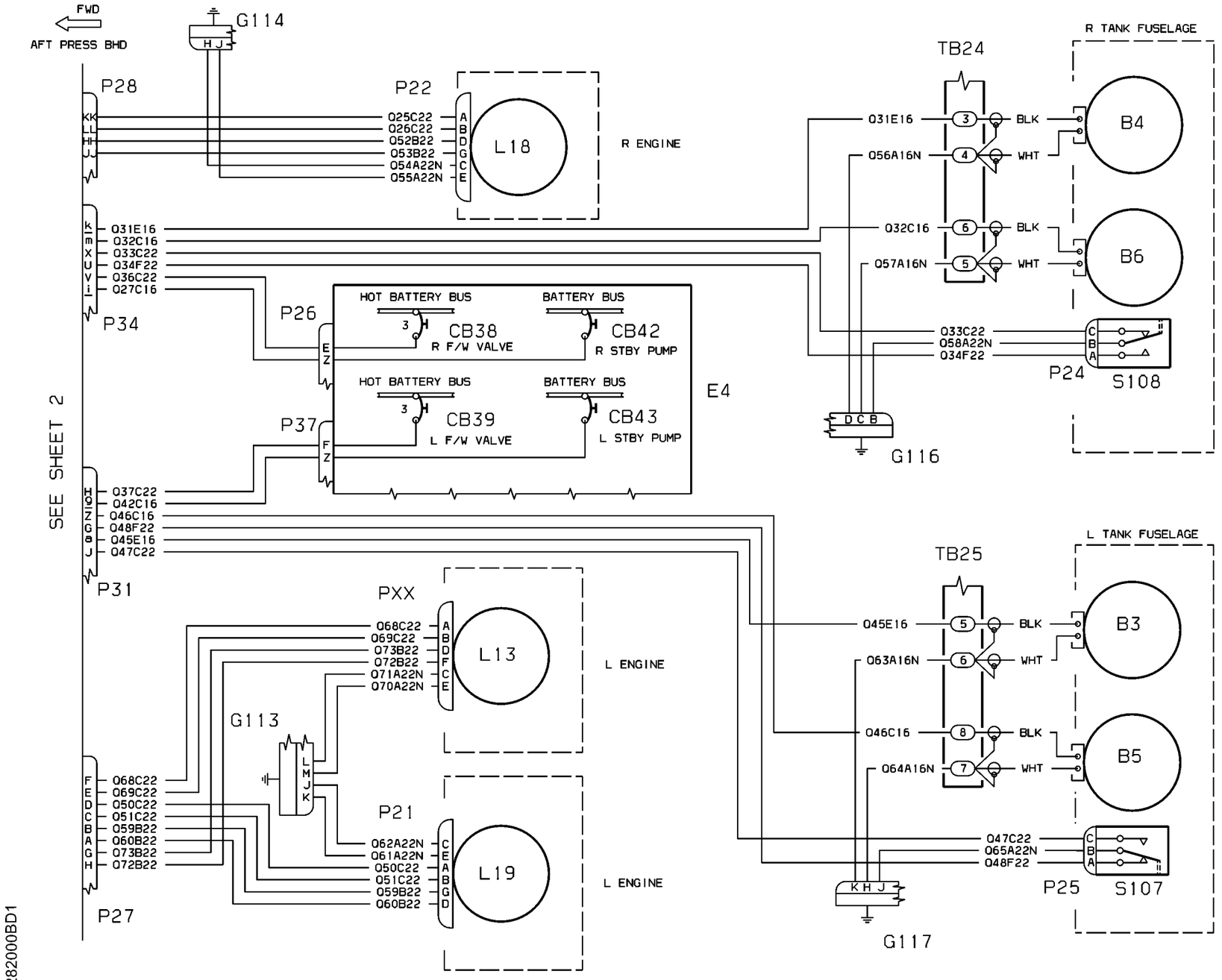


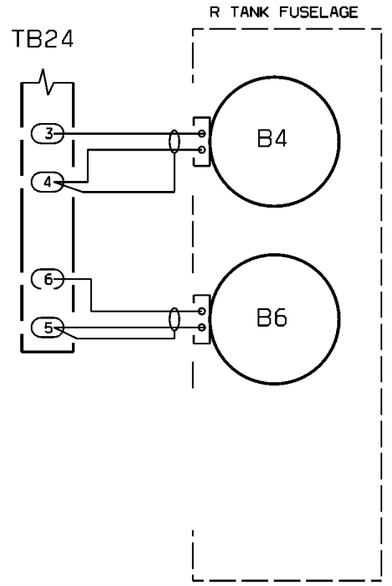


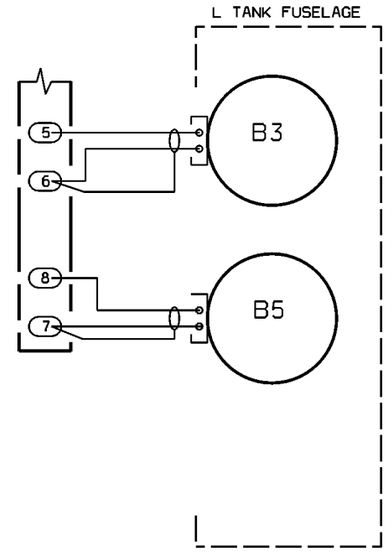


NOTE: REFER TO CROSS REFERENCE LIST FOR THE VALUE OF EQUIPMENT CB42 CB43

WM_282000BD1

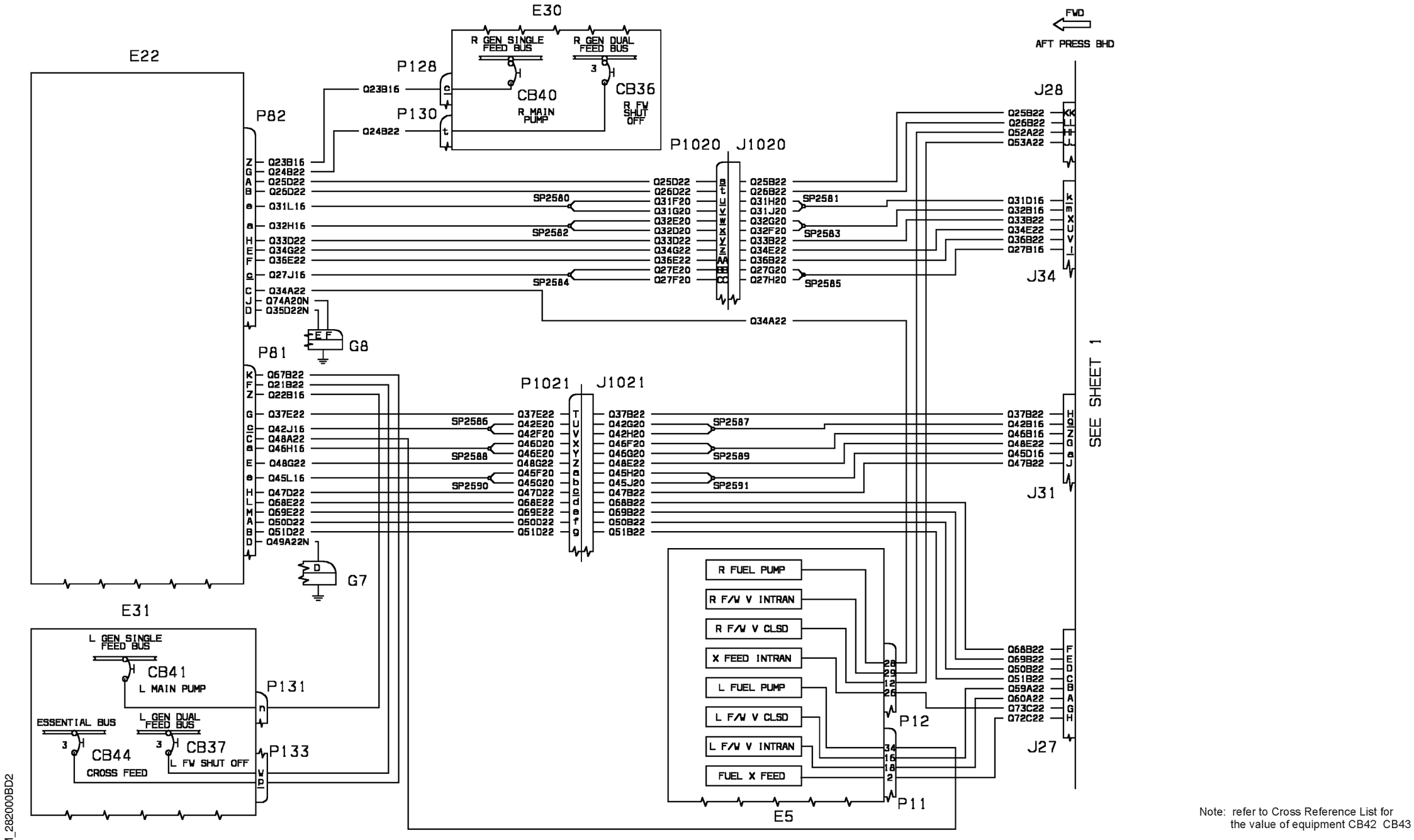


WM_282000BD2

Note: refer to Cross Reference List for the value of equipment CB42 CB43

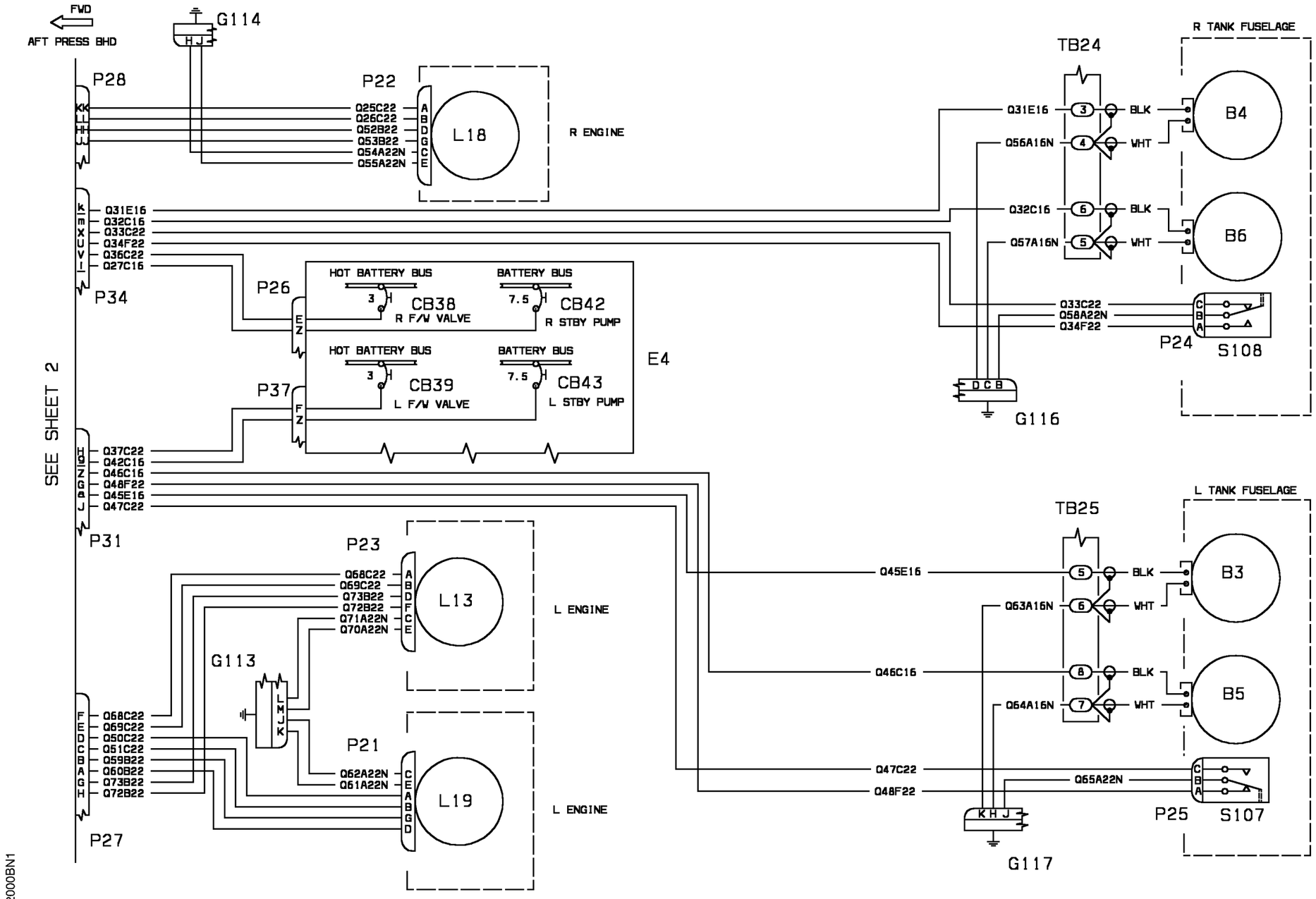


WM_282000BN1

| EFFECTIVITY: | DISTRIBUTION |
|---|---|
| 1034-1104 | Distribution System |

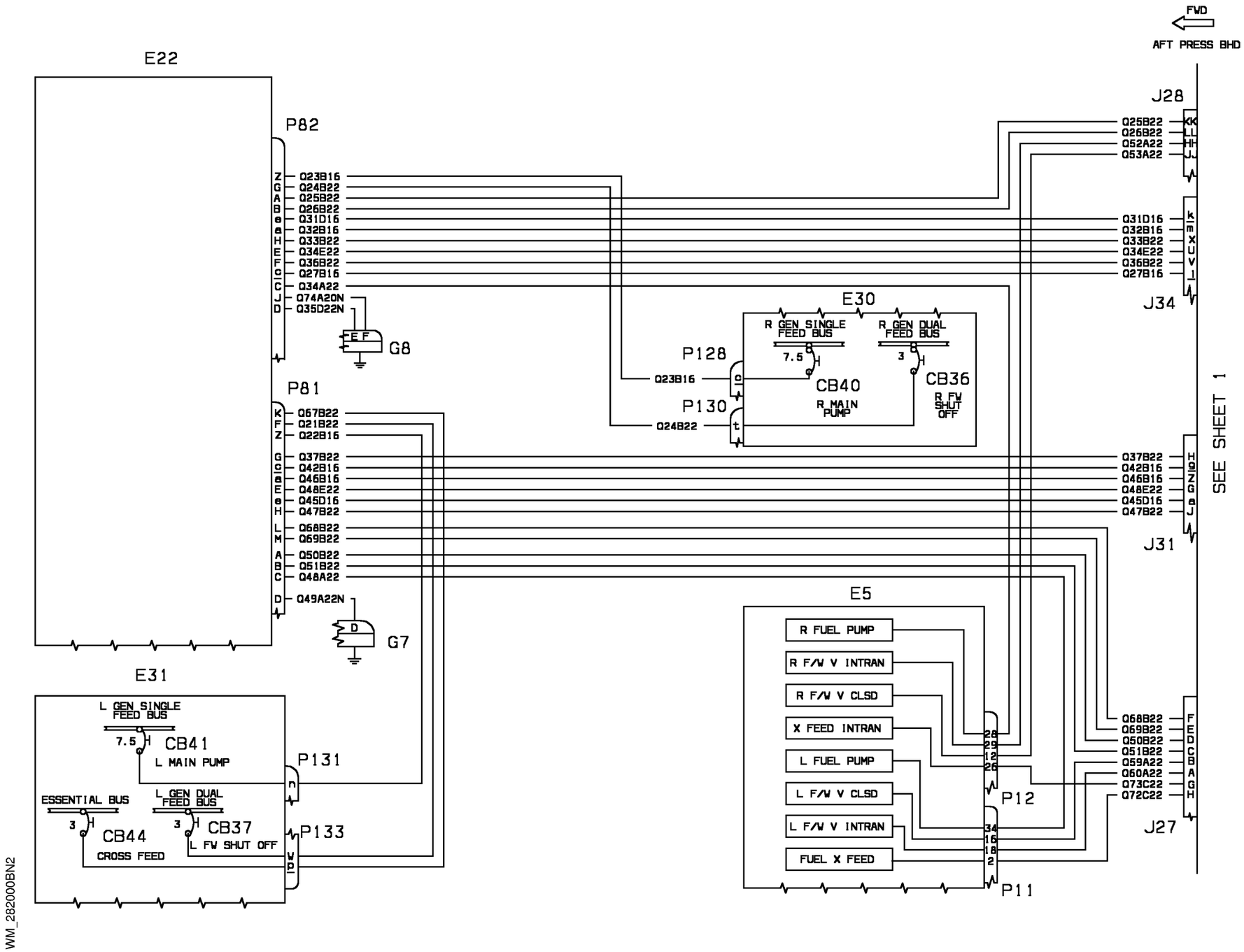
FWD
AFT PRESS BHD
E22
P82
Z Q23B16
G Q24B22
A Q25B22
B Q26B22
e Q31D16
a Q32B16
H Q33B22
E Q34E22
F Q36B22
c Q27B16
C Q34A22
J Q74A20N
D Q35D22N
G8
P81
K Q67B22
F Q21B22
Z Q22B16
G Q37B22
c Q42B16
a Q46B16
E Q48E22
e Q45D16
H Q47B22
L Q68B22
M Q69B22
A Q50B22
B Q51B22
C Q48A22
D Q49A22N
G7
E31
L GEN SINGLE FEED BUS
7.5
CB41
L MAIN PUMP
P131
ESSENTIAL BUS
L GEN DUAL FEED BUS
3
CB44
CROSS FEED
3
CB37
L FW SHUT OFF
P133
E30
R GEN SINGLE FEED BUS
7.5
R GEN DUAL FEED BUS
3
P128
Q23B16
CB40
R MAIN PUMP
CB36
R FW SHUT OFF
P130
Q24B22
J28
Q25B22
Q26B22
Q52A22
Q53A22
Q31D16
Q32B16
Q33B22
Q34E22
Q36B22
Q27B16
J34
SEE SHEET 1
Q37B22
Q42B16
Q46B16
Q48E22
Q45D16
Q47B22
J31
E5
R FUEL PUMP
R F/W V INTRAN
R F/W V CLSD
X FEED INTRAN
L FUEL PUMP
L F/W V CLSD
L F/W V INTRAN
FUEL X FEED
28
29
12
26
P12
34
16
18
2
P11
Q68B22
Q69B22
Q50B22
Q51B22
Q59A22
Q60A22
Q73C22
Q72C22
J27
WM_282000BN2

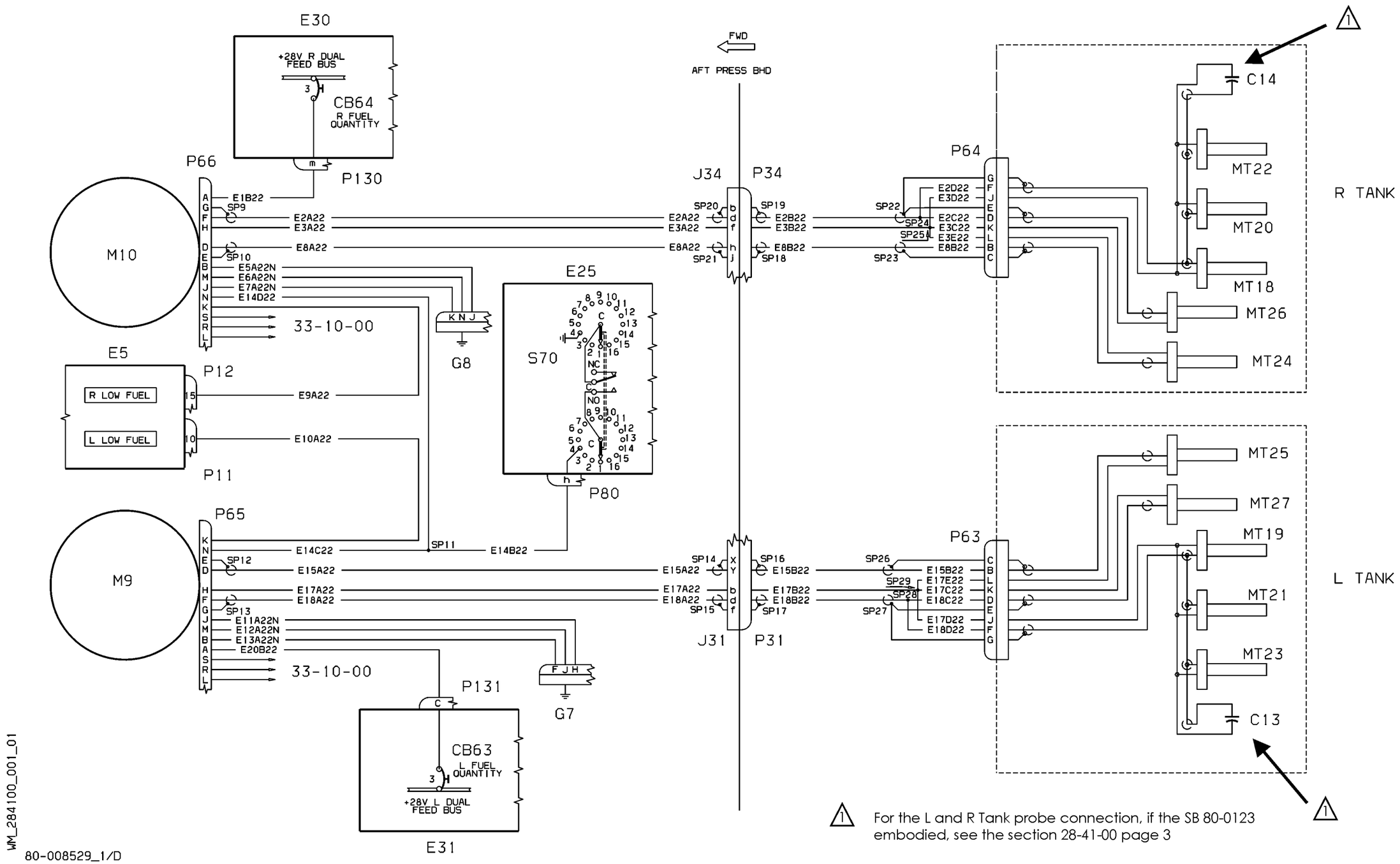


WM_284100_001_01

80-008529_1/D

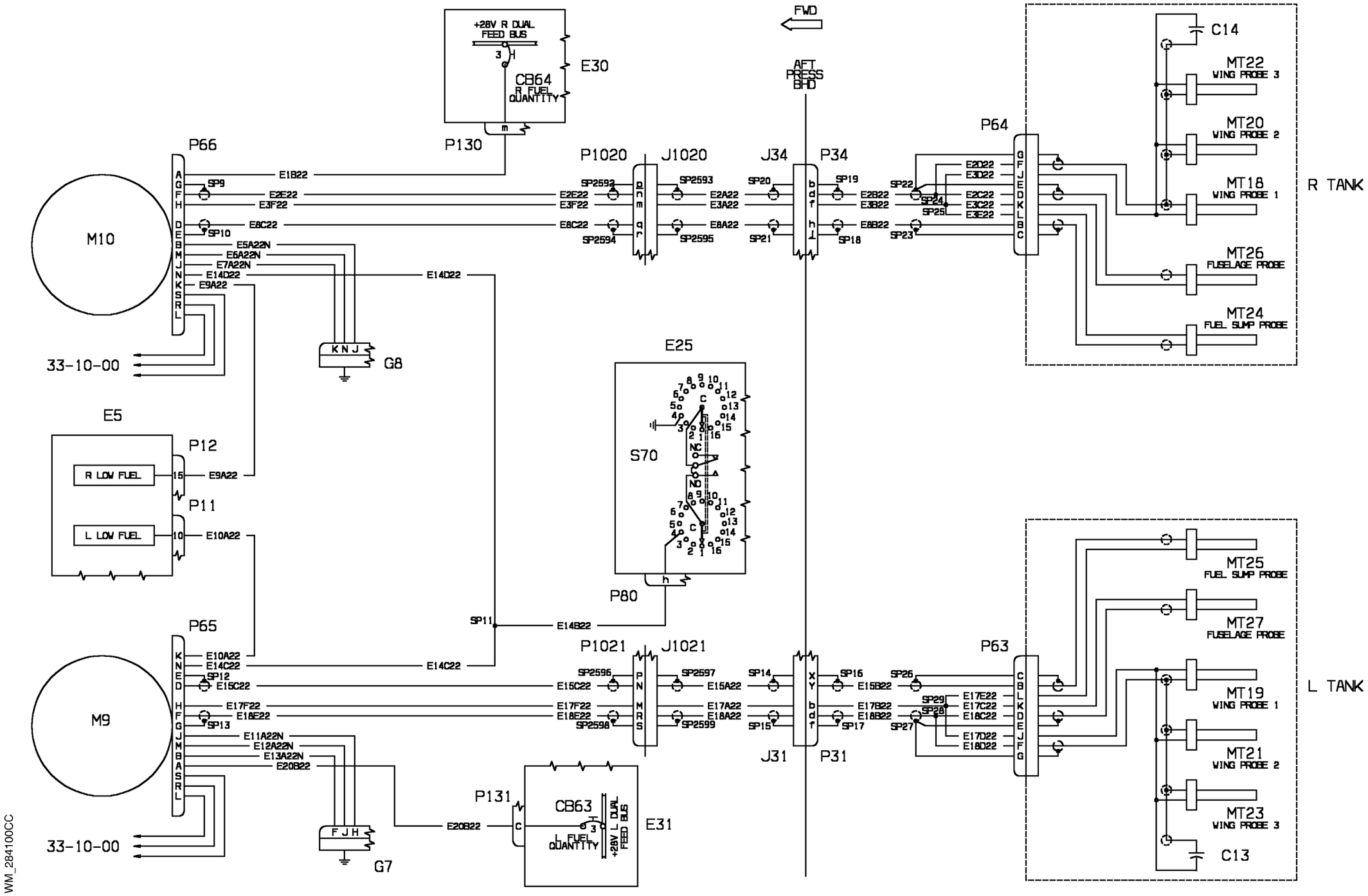
+28V R DUAL FEED BUS
CB64
R FUEL QUANTITY
E30
P130
FWD
AFT PRESS BHD
P66
M10
33-10-00
E1B22
SP9
E2E22
E3F22
E8C22
SP10
E5A22N
E6A22N
E7A22N
E14D22
E9A22
G8
P1020
J1020
J34
P34
P64
C14
MT22 WING PROBE 3
MT20 WING PROBE 2
MT18 WING PROBE 1
MT26 FUSELAGE PROBE
MT24 FUEL SUMP PROBE
R TANK
E5
P12
R LOW FUEL
L LOW FUEL
P11
E10A22
E25
S70
P80
P65
M9
E14C22
SP12
E15C22
E17F22
E18E22
SP13
E11A22N
E12A22N
E13A22N
E20B22
G7
SP11
E14B22
P1021
J1021
J31
P31
P63
MT25 FUEL SUMP PROBE
MT27 FUSELAGE PROBE
MT19 WING PROBE 1
MT21 WING PROBE 2
MT23 WING PROBE 3
C13
L TANK
P131
CB63
L DUAL FEED BUS
+28V FUEL QUANTITY
E31
WM_284100CC

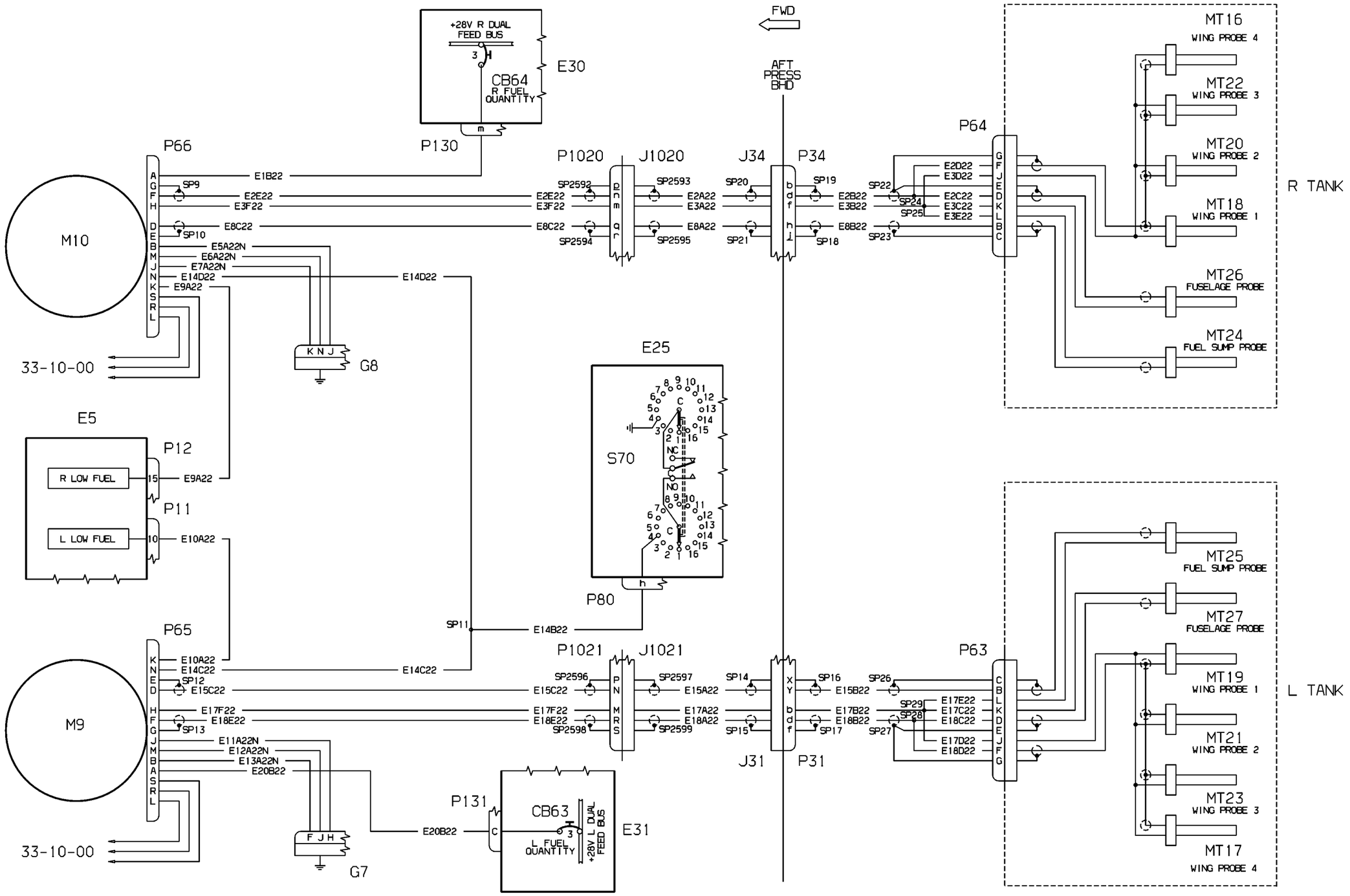
+28V R DUAL FEED BUS
CB64
R FUEL QUANTITY
E30
P130
FWD
AFT PRESS BHD
P66
P1020
J1020
J34
P34
P64
MT16
WING PROBE 4
MT22
WING PROBE 3
MT20
WING PROBE 2
MT18
WING PROBE 1
MT26
FUSELAGE PROBE
MT24
FUEL SUMP PROBE
R TANK
M10
33-10-00
G8
E1B22
E2E22
E3F22
E8C22
E5A22N
E6A22N
E7A22N
E14D22
E9A22
SP9
SP10
SP2592
SP2594
SP2593
SP2595
E2A22
E3A22
E8A22
SP20
SP21
SP19
SP18
E2B22
E3B22
E8B22
SP22
SP23
SP24
SP25
E2D22
E3D22
E2C22
E3C22
E3E22
E25
S70
P80
E5
P12
R LOW FUEL
E9A22
P11
L LOW FUEL
E10A22
SP11
E14B22
P65
P1021
J1021
P63
MT25
FUEL SUMP PROBE
MT27
FUSELAGE PROBE
MT19
WING PROBE 1
MT21
WING PROBE 2
MT23
WING PROBE 3
MT17
WING PROBE 4
L TANK
M9
33-10-00
G7
E10A22
E14C22
E15C22
E17F22
E18E22
E11A22N
E12A22N
E13A22N
E20B22
SP12
SP13
SP2596
SP2598
SP2597
SP2599
E15A22
E17A22
E18A22
SP14
SP15
SP16
SP17
E15B22
E17B22
E18B22
SP26
SP27
SP28
SP29
E17E22
E17C22
E18C22
E17D22
E18D22
J31
P31
P131
CB63
L FUEL QUANTITY
+28V L DUAL FEED BUS
E31

# *PIAGGIO P.180 AVANTI*
# *WIRING MANUAL*

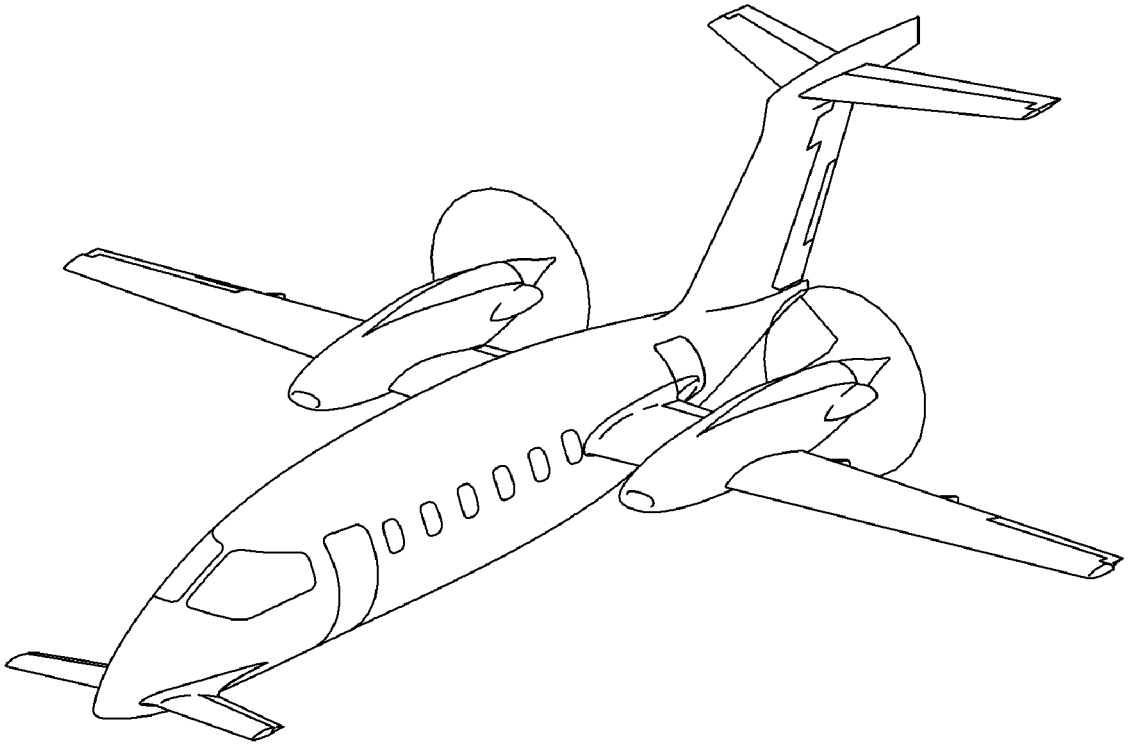

# VOLUME 2
**Chapter 29 thru Chapter 33**

Report No. 9067

Issue No. E0
Issue Date: Oct. 30/09

Revision No: E3
Revision Date: Mar. 19/12

PIAGGIO AERO INDUSTRIES S.p.A
VIA CIBRARIO, 4
16154 GENOVA
ITALY

INTENTIONALLY LEFT BLANK

CHAPTER 29 - HYDRAULIC POWER
LIST OF EFFECTIVE PAGES

| CHAPTER SECTION SUBJECT | PAGE | SHEET | DATE |
|---|---|---|---|
| 29 - LOEP | 1 | | Oct. 30/09 |
| | 2 | | Oct. 30/09 |
| 29 - TOC | 1 | | Oct. 30/09 |
| | 2 | | Oct. 30/09 |
| 29-10-00 | 1 | | Oct. 30/09 |
| 29-10-00 | 2 | | Oct. 30/09 |
| 29-30-00 | 1 | | Oct. 30/09 |
| 29-30-00 | 2 | | Oct. 30/09 |

INTENTIONALLY LEFT BLANK

CHAPTER 29 - HYDRAULIC POWER
TABLE OF CONTENTS


| SUBJECT | CHAPTER SECTION SUBJECT | PAGE | SHEET |
|---|---|---|---|
| MAIN | | | |
| Hydraulic System | 29-10-00 | 1 | |
| Hydraulic System | 29-10-00 | 2 | |
| INDICATING | | | |
| Hydraulic Power Indicating | 29-30-00 | 1 | |
| Hydraulic Power Indicating | 29-30-00 | 2 | |

INTENTIONALLY LEFT BLANK

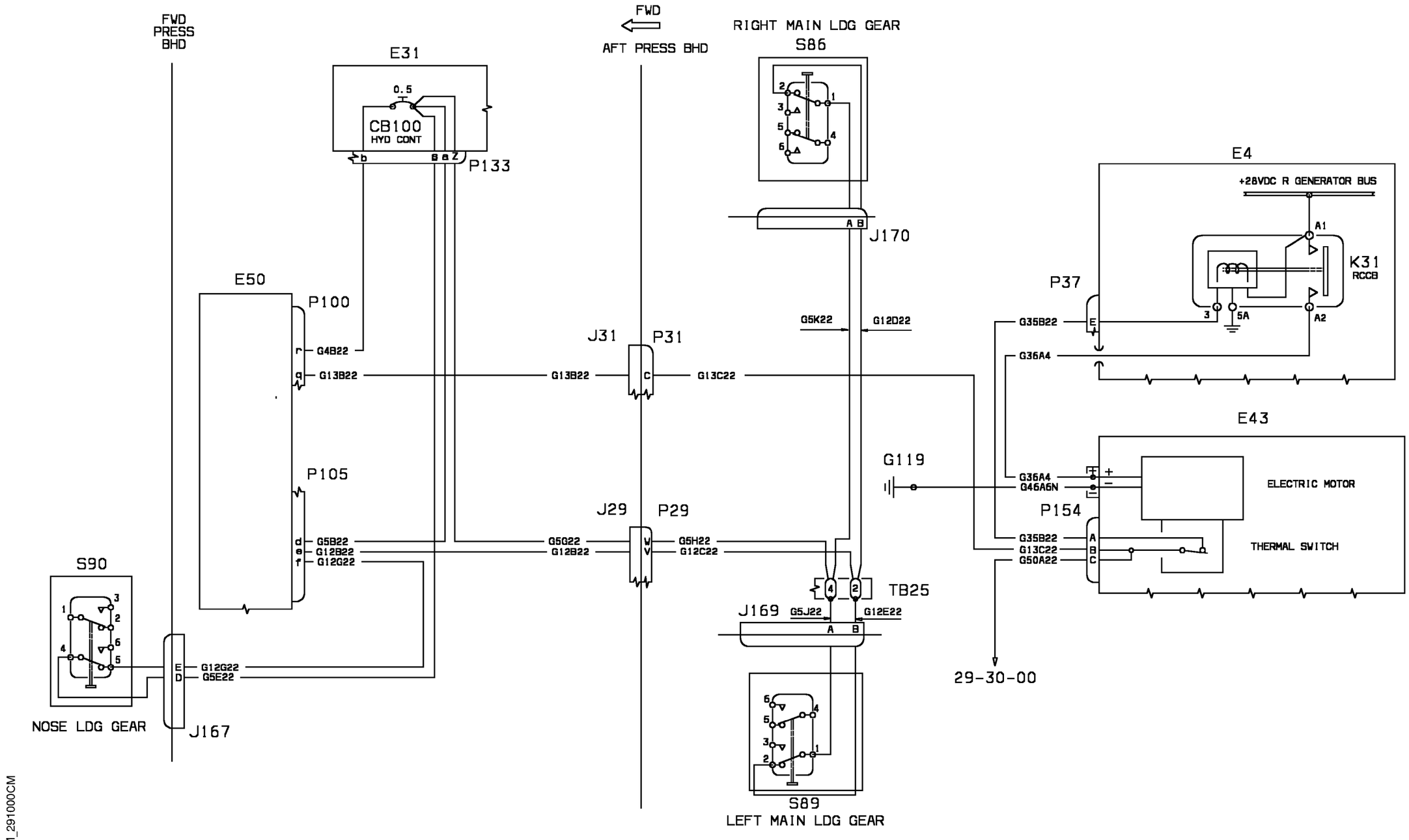
FWD
PRESS
BHD
E31
0.5
CB100
HYD CONT
b
S a Z
P133
E50
P100
G4B22
G13B22
P105
G5B22
G12B22
G12G22
S90
NOSE LDG GEAR
E
D
G12G22
G5E22
J167
FWD
AFT PRESS BHD
J31
P31
G13B22
C
G13C22
J29
P29
G5G22
G12B22
W
V
G5H22
G12C22
RIGHT MAIN LDG GEAR
S86
A B
J170
G5K22
G12D22
4
2
TB25
J169
G5J22
G12E22
A
B
S89
LEFT MAIN LDG GEAR
G119
E4
+28VDC R GENERATOR BUS
A1
K31
RCCB
3
5A
A2
P37
G35B22
E
G36A4
E43
G36A4
G46A6N
+
−
ELECTRIC MOTOR
P154
G35B22
G13C22
G50A22
A
B
C
THERMAL SWITCH
29-30-00

WM_291000CM

Note: Effectivity 1004 - 1049 if SB. 80-0166 rev1 (recommended) embodied

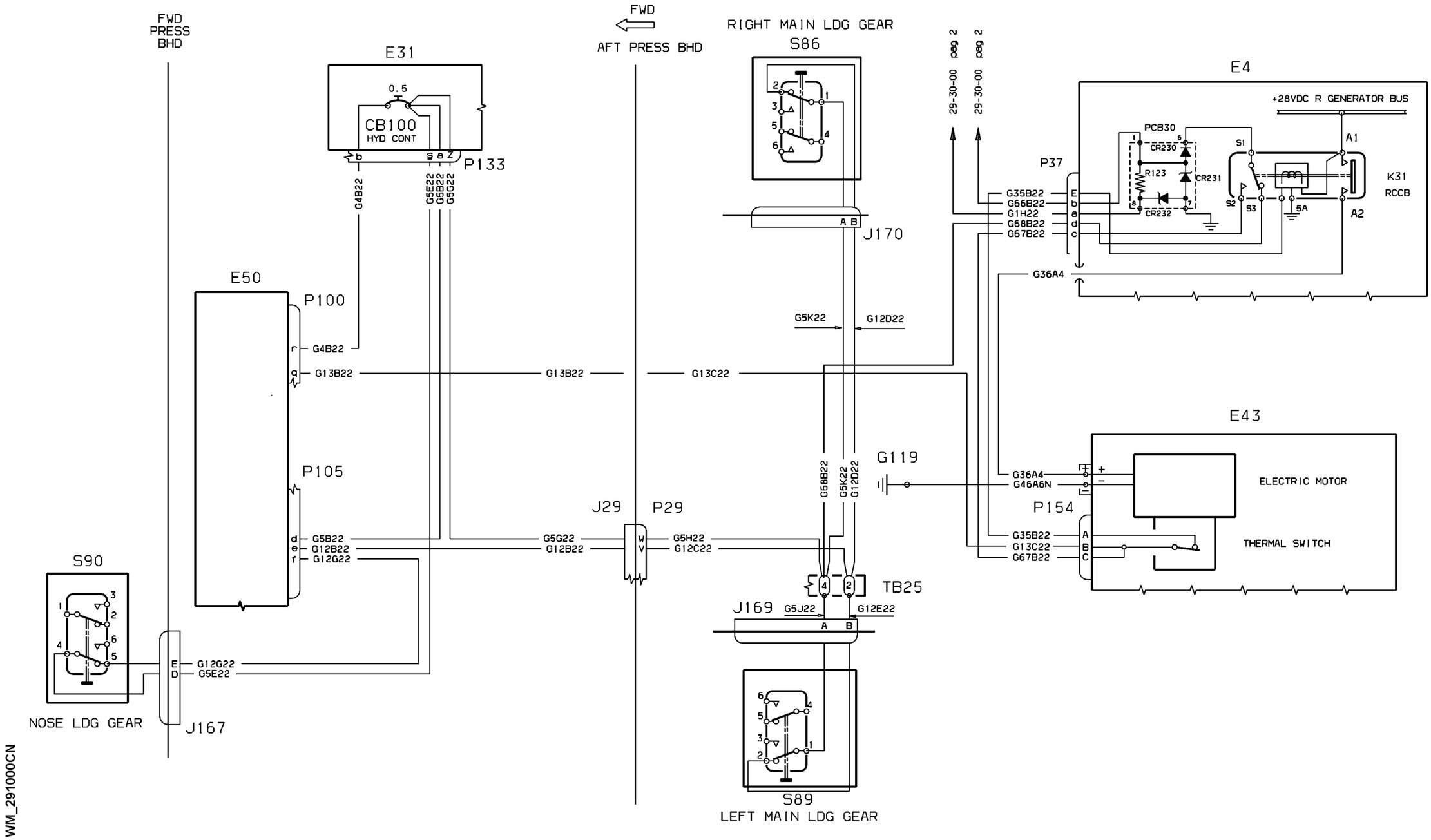


WM_291000CN

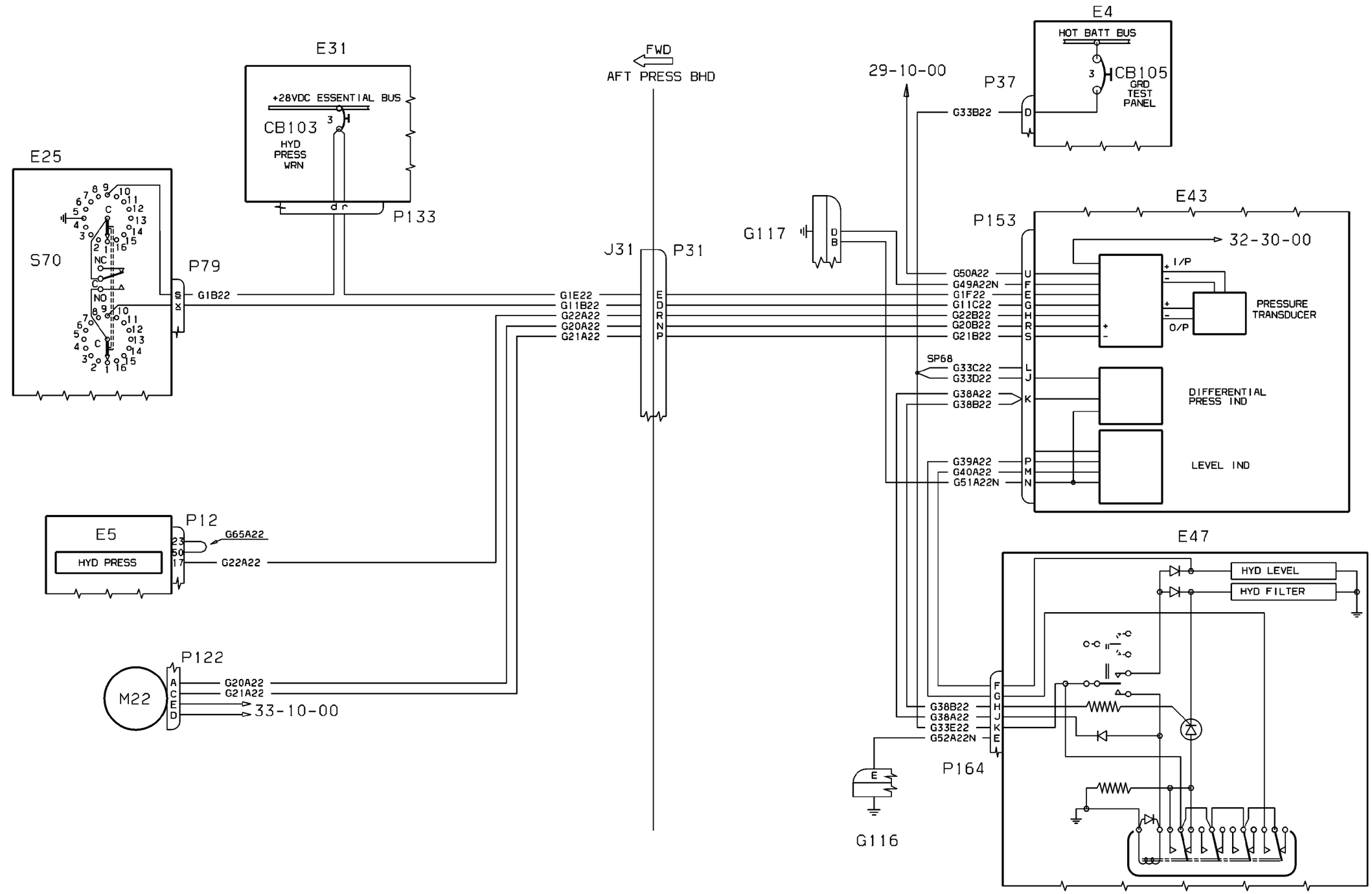


WM_293000CM

| EFFECTIVITY: | INDICATING |
|---|---|
| 1004-1049 | Hydraulic Power Indicating |

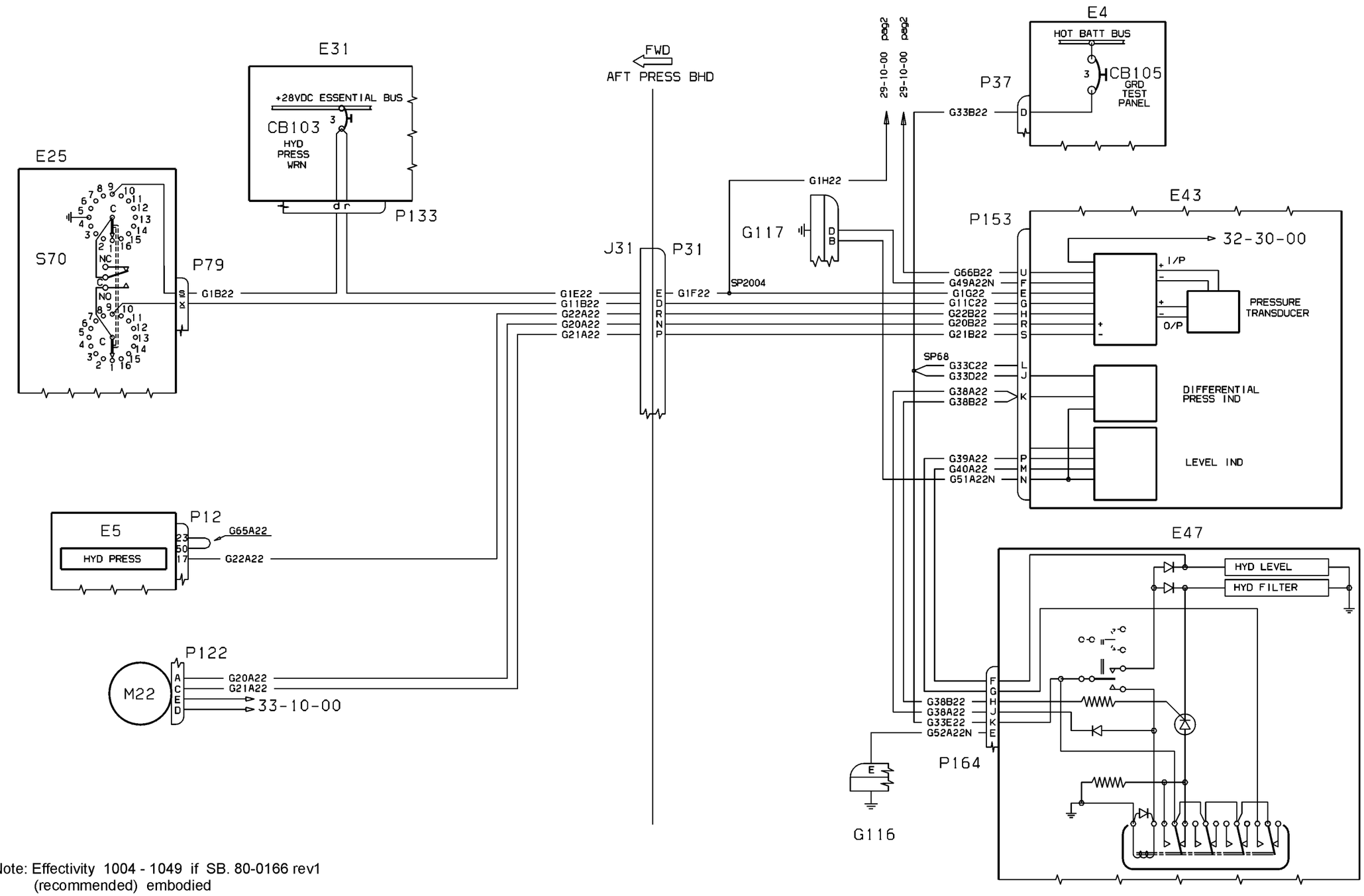


Note: Effectivity 1004 - 1049 if SB. 80-0166 rev1 (recommended) embodied

WIM_293000CN

CHAPTER 30 - ICE AND RAIN PROTECTION
LIST OF EFFECTIVE PAGES

| CHAPTER SECTION SUBJECT | PAGE | SHEET | DATE |
|---|---|---|---|
| 30 - LOEP | 1 | | Oct. 30/09 |
| | 2 | | Oct. 30/09 |
| 30 - TOC | 1 | | Oct. 30/09 |
| | 2 | | Oct. 30/09 |
| 30-11-00 | 1 | | Oct. 30/09 |
| 30-12-00 | 1 | 1 | Oct. 30/09 |
| 30-12-00 | 1 | 2 | Oct. 30/09 |
| 30-12-00 | 2 | 1 | Oct. 30/09 |
| 30-12-00 | 2 | 2 | Oct. 30/09 |
| 30-12-00 | 3 | 1 | Oct. 30/09 |
| 30-12-00 | 3 | 2 | Oct. 30/09 |
| 30-22-00 | 1 | | Oct. 30/09 |
| 30-22-00 | 2 | | Oct. 30/09 |
| 30-23-00 | 1 | | Oct. 30/09 |
| 30-24-00 | 1 | | Oct. 30/09 |
| 30-30-00 | 1 | | Oct. 30/09 |
| 30-30-00 | 2 | | Oct. 30/09 |
| 30-31-00 | 1 | | Oct. 30/09 |
| 30-32-00 | 1 | | Oct. 30/09 |
| 30-32-00 | 2 | | Oct. 30/09 |
| 30-40-00 | 1 | 1 | Oct. 30/09 |
| 30-40-00 | 1 | 2 | Oct. 30/09 |
| 30-40-00 | 1 | 3 | Oct. 30/09 |
| 30-80-00 | 1 | | Oct. 30/09 |
| 30-80-00 | 2 | | Oct. 30/09 |

INTENTIONALLY LEFT BLANK

CHAPTER 30 - ICE AND RAIN PROTECTION
TABLE OF CONTENTS


| SUBJECT | CHAPTER SECTION SUBJECT | PAGE | SHEET |
|---|---|---|---|
| AIRFOIL | | | |
| Wing Anti Ice | 30-11-00 | 1 | |
| Fwd Wing Anti Ice | 30-12-00 | 1 | 1 |
| Fwd Wing Anti Ice | 30-12-00 | 1 | 2 |
| Fwd Wing Anti Ice | 30-12-00 | 2 | 1 |
| Fwd Wing Anti Ice | 30-12-00 | 2 | 2 |
| Fwd Wing Anti Ice | 30-12-00 | 3 | 1 |
| Fwd Wing Anti Ice | 30-12-00 | 3 | 2 |
| AIR INTAKES | | | |
| Engine Air Intake Deicers | 30-22-00 | 1 | |
| Engine Air Intake Deicers | 30-22-00 | 2 | |
| Air Intake Lips A/I | 30-23-00 | 1 | |
| Engine Inlet Inertial Separator | 30-24-00 | 1 | |
| Pitot, Static, Stall HTR | 30-30-00 | 1 | |
| Pitot, Static, Stall HTR | 30-30-00 | 2 | |
| Altn Static HTR ( optional ) | 30-31-00 | 1 | |
| Pitot Heating Monitor (Optional) | 30-32-00 | 1 | |
| Pitot Heating Monitor (Optional) | 30-32-00 | 2 | |
| WINDOWS, WINDSHIELDS AND DOORS | | | |
| Windshield Anti-ice/defog | 30-40-00 | 1 | 1 |
| Windshield Anti-ice/defog | 30-40-00 | 1 | 2 |
| Windshield Anti-ice/defog | 30-40-00 | 1 | 3 |
| DETECTION | | | |
| Ice Detector | 30-80-00 | 1 | |
| Ice Detector | 30-80-00 | 2 | |

INTENTIONALLY LEFT BLANK

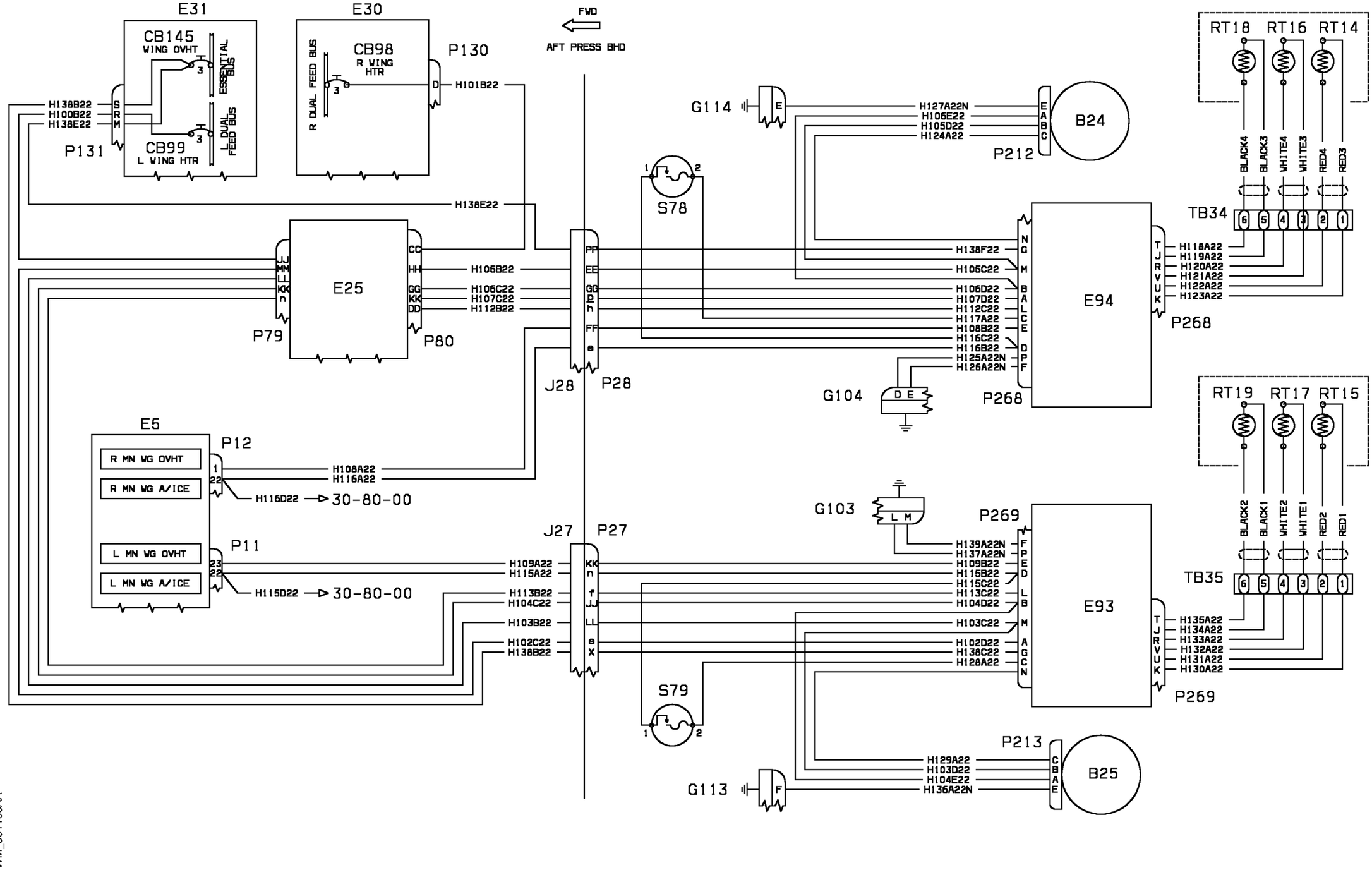
E31
CB145
WING OVHT
ESSENTIAL BUS
DUAL FEED BUS
CB99
L WING HTR
P131
H138B22
H100B22
H138E22
E30
CB98
R WING HTR
R DUAL FEED BUS
P130
H101B22
FWD
AFT PRESS BHD
H138E22
S78
G114
H127A22N
H106E22
H105D22
H124A22
P212
B24
RT18 RT16 RT14
BLACK4 BLACK3 WHITE4 WHITE3 RED4 RED3
TB34
H118A22
H119A22
H120A22
H121A22
H122A22
H123A22
P268
E25
P79
P80
H105B22
H106C22
H107C22
H112B22
J28
P28
H138F22
H105C22
H106D22
H107D22
H112C22
H117A22
H108B22
H116C22
H116B22
H125A22N
H126A22N
E94
G104
P268
RT19 RT17 RT15
BLACK2 BLACK1 WHITE2 WHITE1 RED2 RED1
TB35
H135A22
H134A22
H133A22
H132A22
H131A22
H130A22
P269
E5
P12
R MN WG OVHT
R MN WG A/ICE
H108A22
H116A22
H116D22
30-80-00
P11
L MN WG OVHT
L MN WG A/ICE
H115D22
30-80-00
J27
P27
H109A22
H115A22
H113B22
H104C22
H103B22
H102C22
H138B22
G103
P269
H139A22N
H137A22N
H109B22
H115B22
H115C22
H113C22
H104D22
H103C22
H102D22
H138C22
H128A22
E93
S79
P213
B25
H129A22
H103D22
H104E22
H136A22N
G113

WM_301100AA

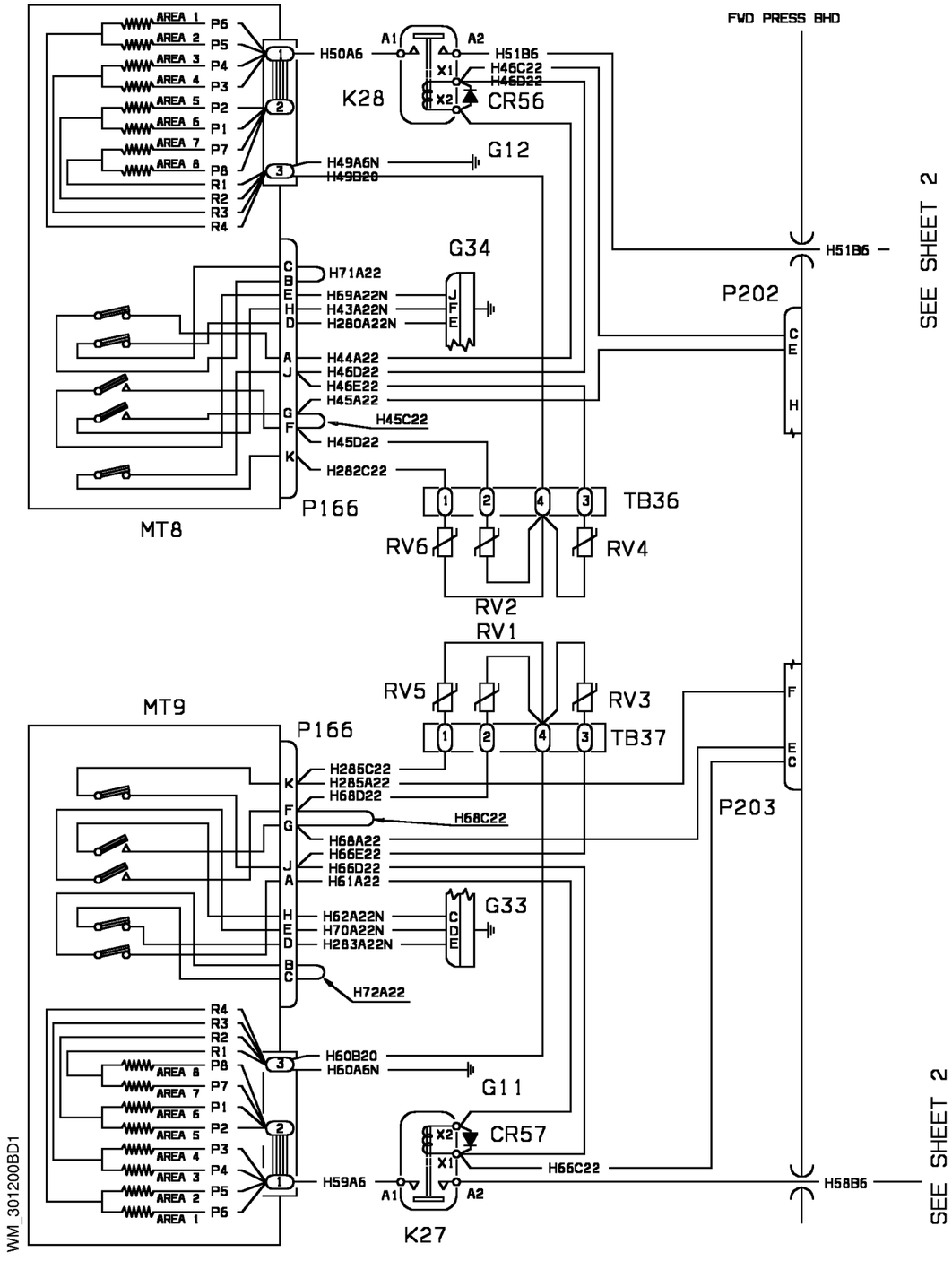


| EFFECTIVITY: 1004-1031 | AIRFOIL<br>Fwd Wing Anti Ice |
|---|---|

**30-12-00**

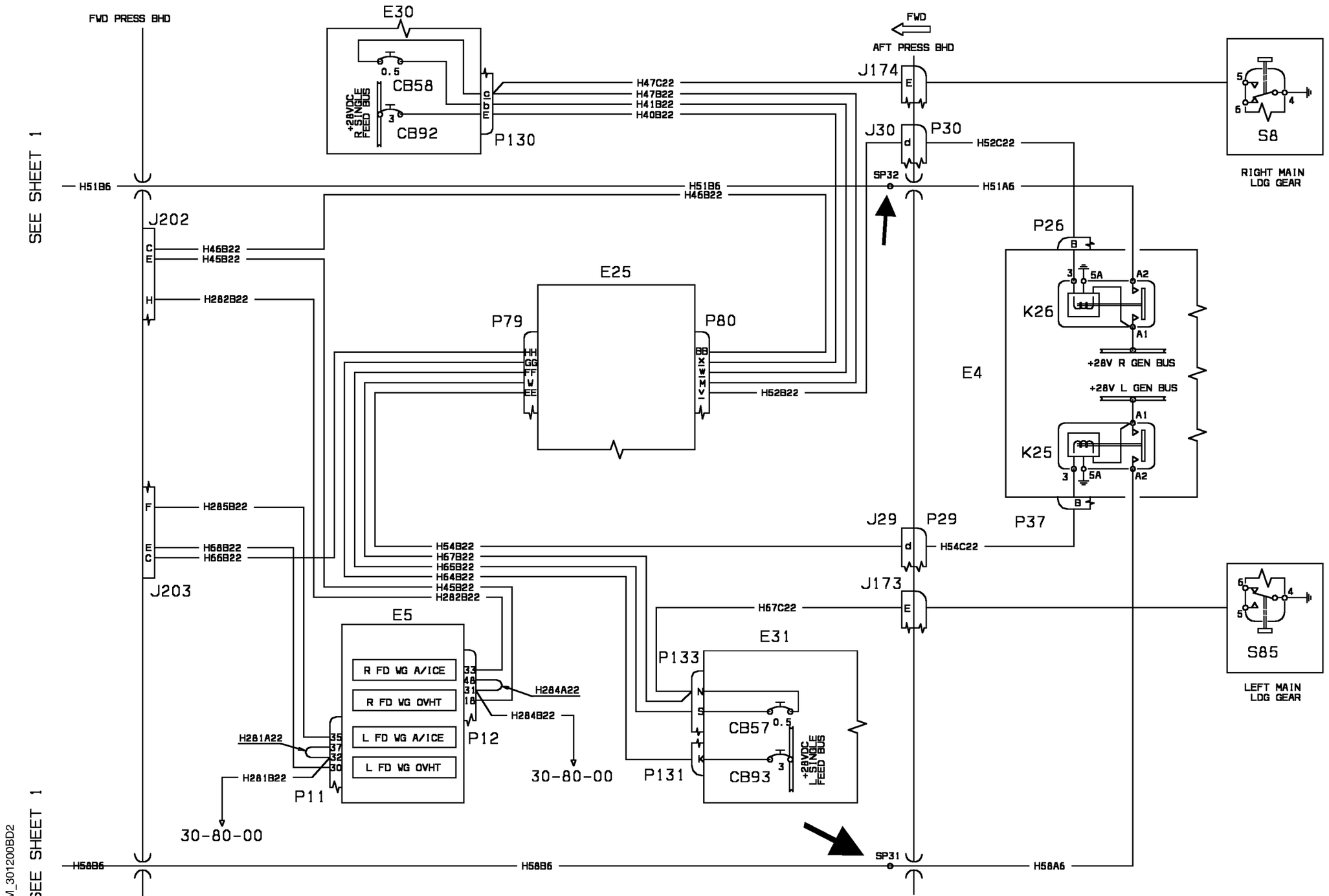
FWD PRESS BHD
E30
0.5
CB58
+28VDC R SINGLE FEED BUS
3
CB92
P130
H47C22
H47B22
H41B22
H40B22
FWD
AFT PRESS BHD
J174
E
S8
5
6
4
RIGHT MAIN LDG GEAR
J30
d
P30
H52C22
SP32
H51A6
H51B6
H46B22
SEE SHEET 1
J202
C
E
H46B22
H45B22
H
H282B22
E25
P79
P80
HH
GG
FF
W
EE
BB
XX
MM
V
H52B22
P26
B
3
5A
A2
K26
A1
+28V R GEN BUS
E4
+28V L GEN BUS
A1
K25
3
5A
A2
B
F
H285B22
E
C
H68B22
H66B22
J203
J29
P29
d
H54C22
P37
H54B22
H67B22
H65B22
H64B22
H45B22
H282B22
J173
E
H67C22
S85
6
4
5
LEFT MAIN LDG GEAR
E5
E31
R FD WG A/ICE
R FD WG OVHT
L FD WG A/ICE
L FD WG OVHT
33
48
31
18
H284A22
H284B22
P12
P133
N
S
K
CB57
0.5
CB93
3
+28VDC L SINGLE FEED BUS
H281A22
35
37
32
30
H281B22
P11
30-80-00
30-80-00
P131
SEE SHEET 1
WM_301200BD2
H58B6
H58B6
SP31
H58A6

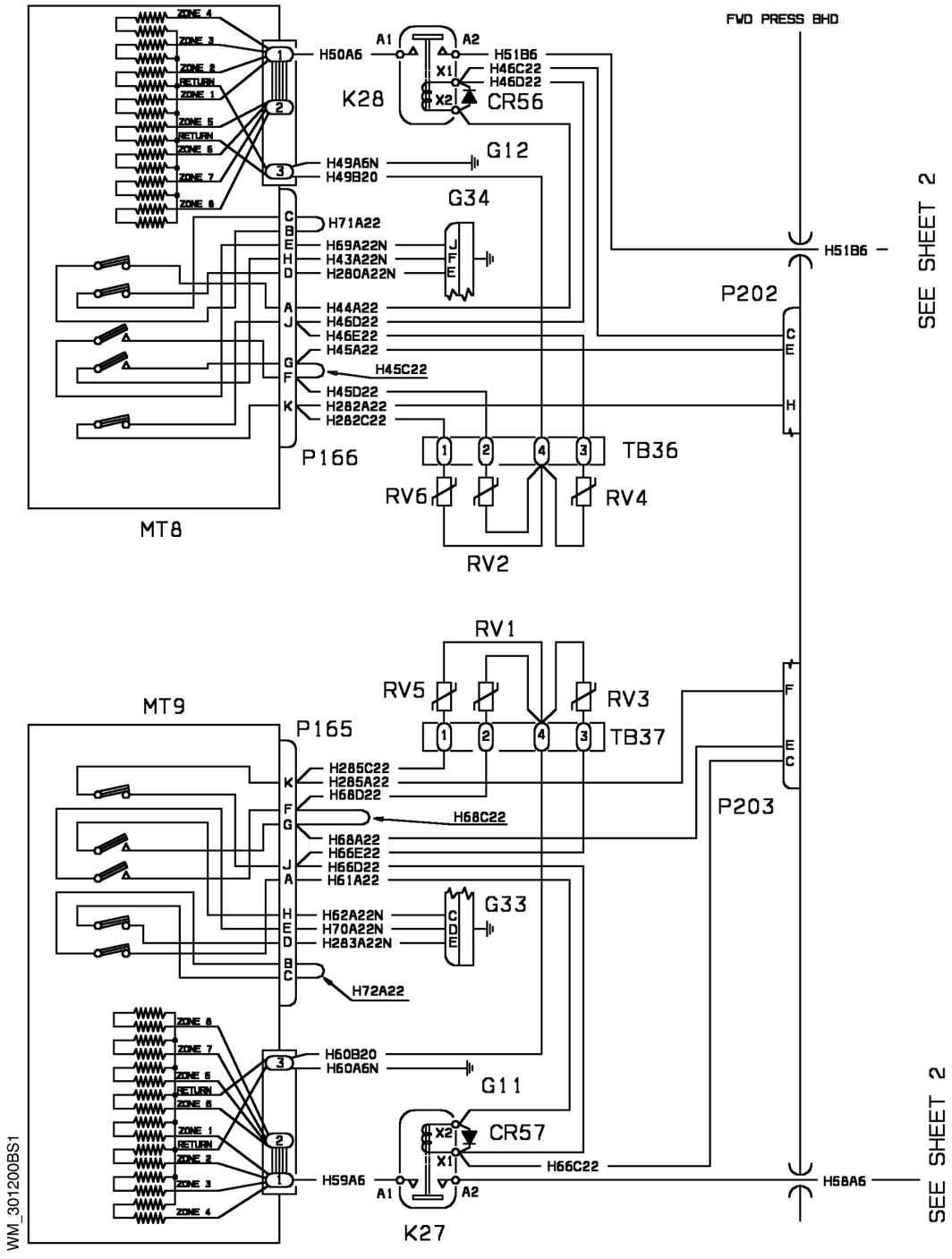


| EFFECTIVITY: | AIRFOIL |
|---|---|
| 1032-1033 | Fwd Wing Anti Ice |

**30-12-00**

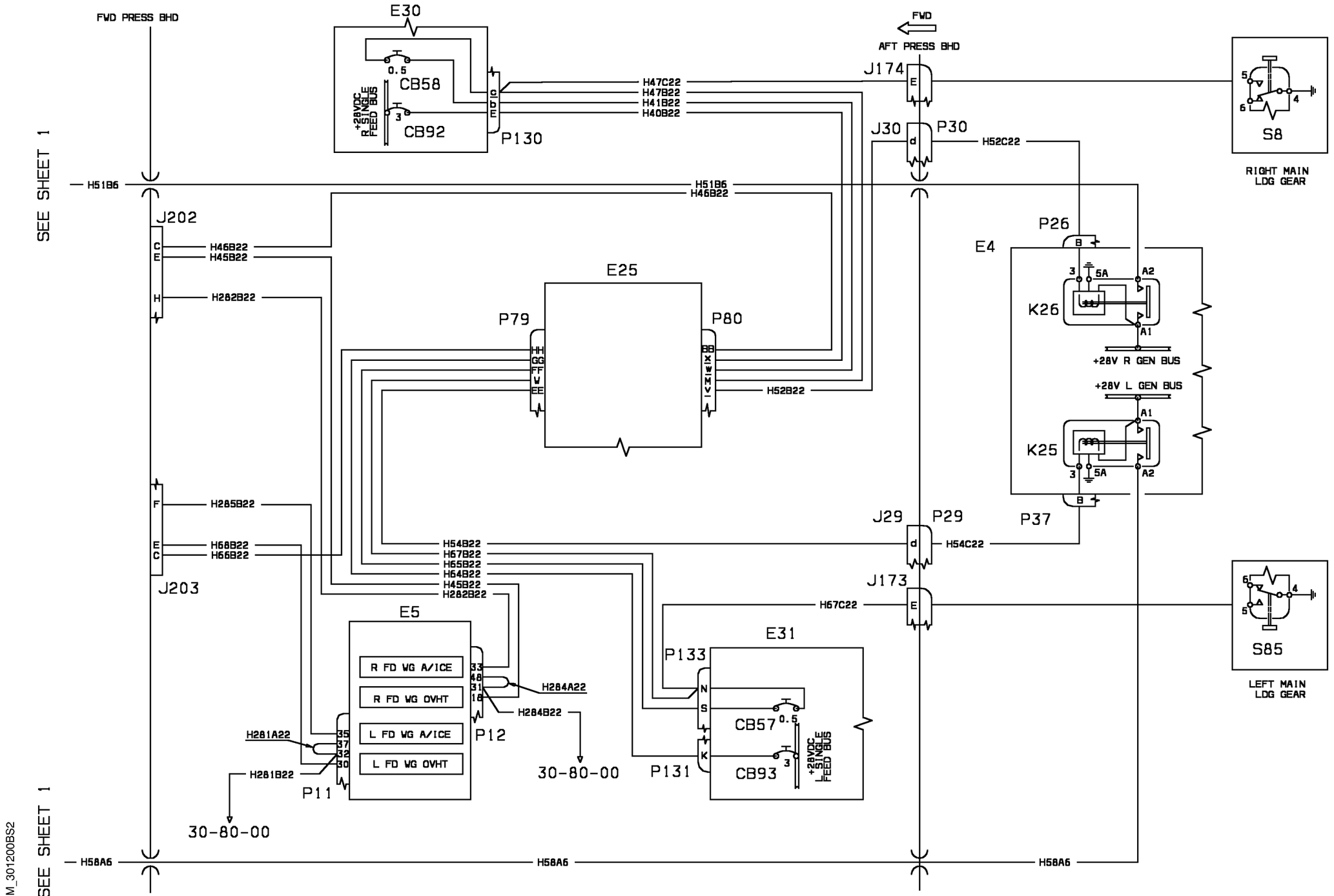
FWD PRESS BHD
E30
0.5
CB58
+28VDC R SINGLE FEED BUS
3
CB92
P130
H47C22
H47B22
H41B22
H40B22
FWD
AFT PRESS BHD
J174
E
S8
5
6
4
RIGHT MAIN LDG GEAR
J30
P30
H52C22
SEE SHEET 1
H51B6
H51B6
H46B22
J202
C
E
H46B22
H45B22
H
H282B22
E25
P79
P80
HH
GG
FF
W
EE
BB
XX
MM
LL
H52B22
P26
E4
B
3
5A
A2
K26
A1
+28V R GEN BUS
+28V L GEN BUS
K25
F
H285B22
E
C
H68B22
H66B22
J203
J29
P29
P37
d
H54C22
H54B22
H67B22
H65B22
H64B22
H45B22
H282B22
J173
H67C22
E5
R FD WG A/ICE
R FD WG OVHT
L FD WG A/ICE
L FD WG OVHT
33
48
31
18
H284A22
H284B22
P12
H281A22
35
37
32
30
H281B22
P11
30-80-00
30-80-00
E31
P133
N
S
K
P131
CB57
CB93
+28VDC L SINGLE FEED BUS
S85
LEFT MAIN LDG GEAR
H58A6
H58A6
H58A6
SEE SHEET 1
WM_301200BS2

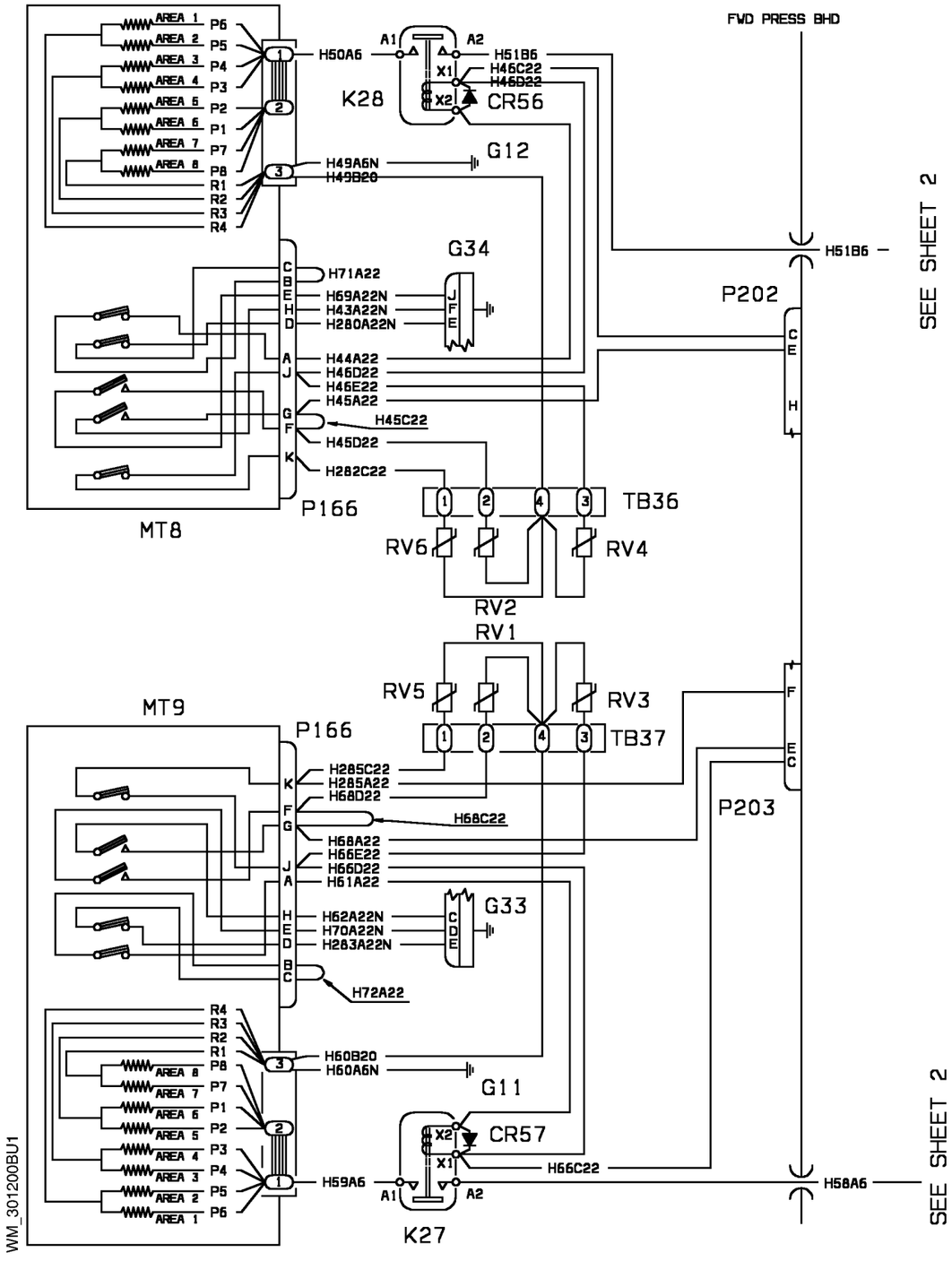


| EFFECTIVITY: 1034-1104 | AIRFOIL<br>Fwd Wing Anti Ice |
|---|---|

**30-12-00**

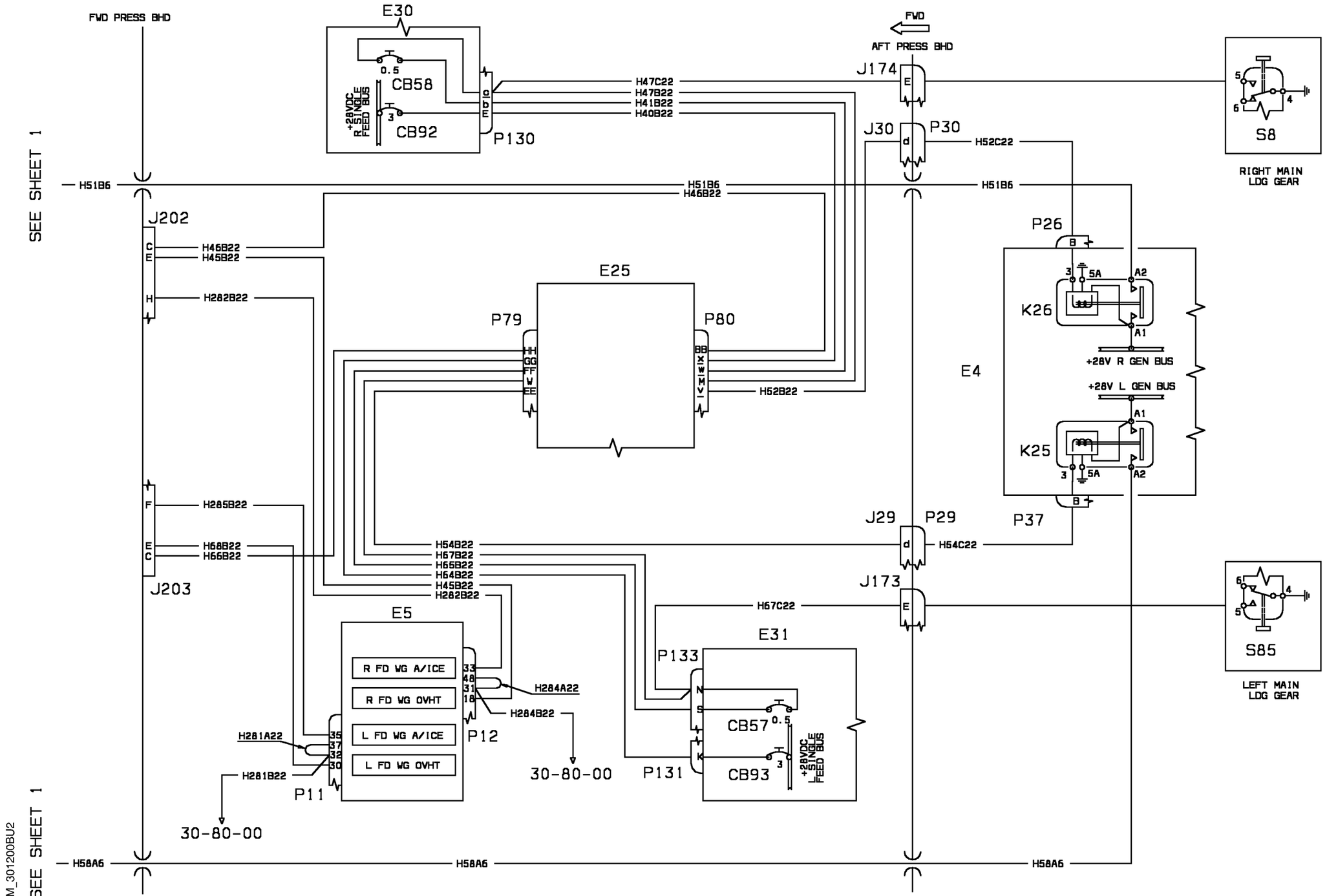
SEE SHEET 1
FWD PRESS BHD
E30
0.5
CB58
+28VDC R SINGLE FEED BUS
3
CB92
P130
H47C22
H47B22
H41B22
H40B22
FWD
AFT PRESS BHD
J174
E
S8
5
6
4
RIGHT MAIN LDG GEAR
J30
d
P30
H52C22
H51B6
H51B6
H46B22
J202
C
E
H46B22
H45B22
H
H282B22
E25
P79
P80
HH
GG
FF
W
EE
BB
XX
MM
V
H52B22
P26
B
3
5A
A2
K26
A1
+28V R GEN BUS
E4
+28V L GEN BUS
A1
K25
3
5A
A2
B
P37
J29
P29
d
H54C22
F
H285B22
E
C
H68B22
H66B22
J203
H54B22
H67B22
H65B22
H64B22
H45B22
H282B22
J173
E
H67C22
S85
6
4
5
LEFT MAIN LDG GEAR
E5
R FD WG A/ICE
R FD WG OVHT
L FD WG A/ICE
L FD WG OVHT
33
48
31
18
H284A22
H284B22
P12
H281A22
35
37
32
30
H281B22
P11
30-80-00
30-80-00
E31
P133
N
S
K
P131
CB57
0.5
CB93
3
+28VDC L SINGLE FEED BUS
H58A6
H58A6
H58A6
WM_301200BU2
SEE SHEET 1

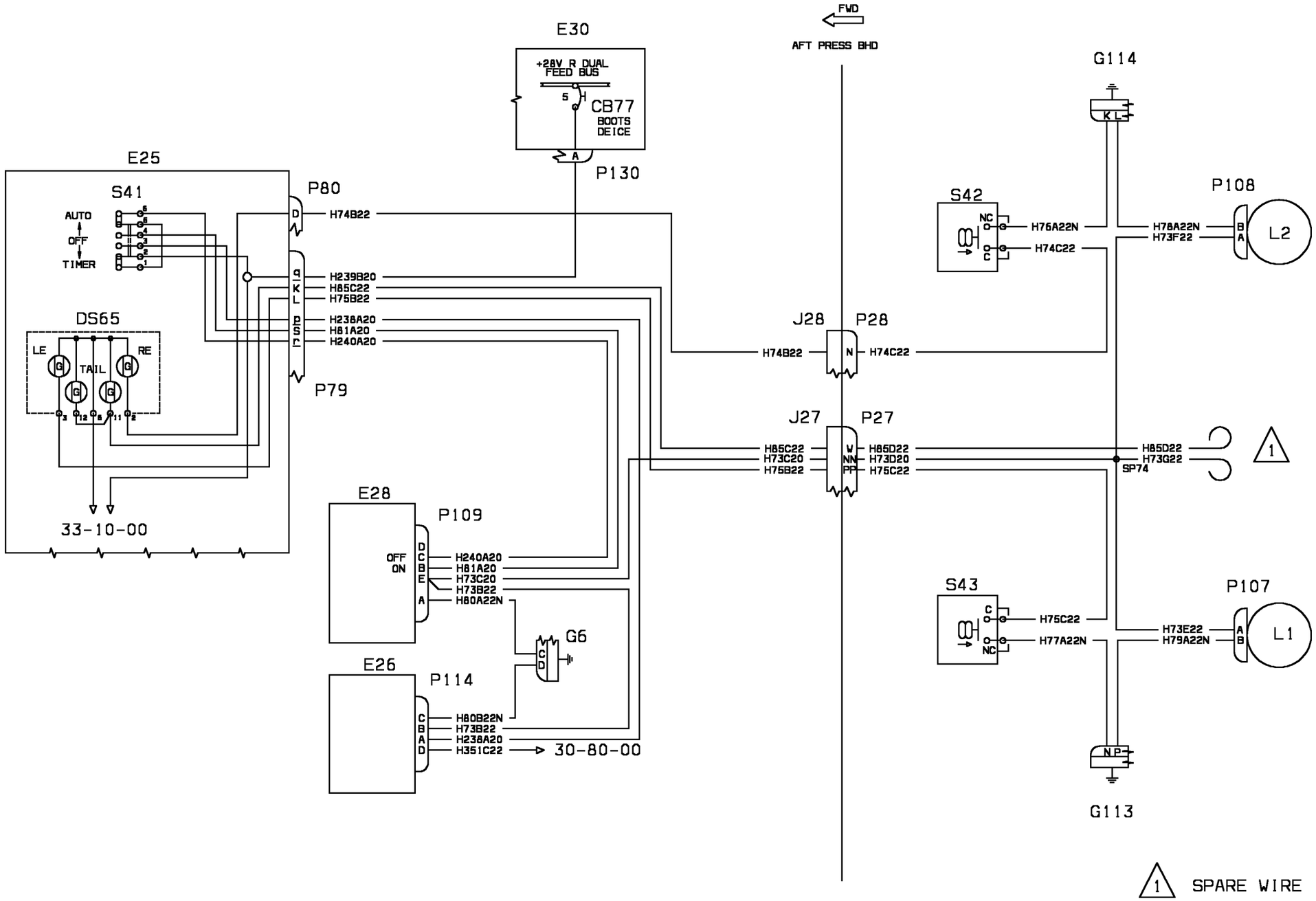
FWD
AFT PRESS BHD
E30
+28V R DUAL FEED BUS
5
CB77
BOOTS DEICE
A
P130
G114
K L
E25
S41
AUTO
OFF
TIMER
P80
D
H74B22
G
K
L
H239B20
H85C22
H75B22
P
S
T
H238A20
H81A20
H240A20
P79
DS65
LE
TAIL
RE
G
33-10-00
S42
NC
C
H76A22N
H74C22
H78A22N
H73F22
B
A
P108
L2
J28
P28
H74B22
N
H74C22
J27
P27
H85C22
H73C20
H75B22
W
NN
PP
H85D22
H73D20
H75C22
H85D22
H73G22
SP74
1
E28
P109
OFF
ON
D
C
B
E
A
H240A20
H81A20
H73C20
H73B22
H80A22N
G6
C
D
E26
P114
C
B
A
D
H80B22N
H73B22
H238A20
H351C22
30-80-00
S43
C
NC
H75C22
H77A22N
H73E22
H79A22N
P107
L1
N P
G113
1
SPARE WIRE

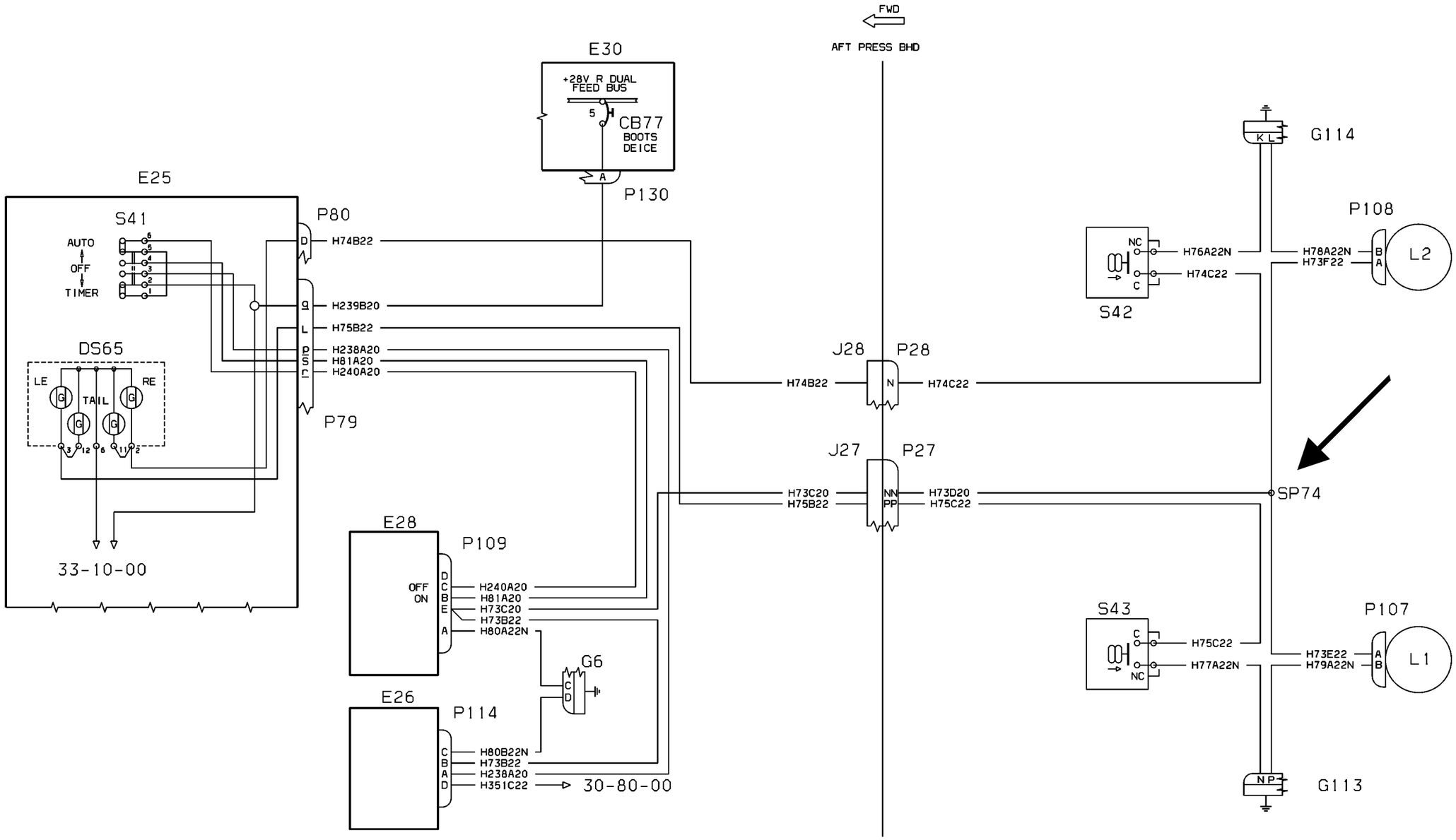


WM_30200_P2_S1

80-008535_3_4_C

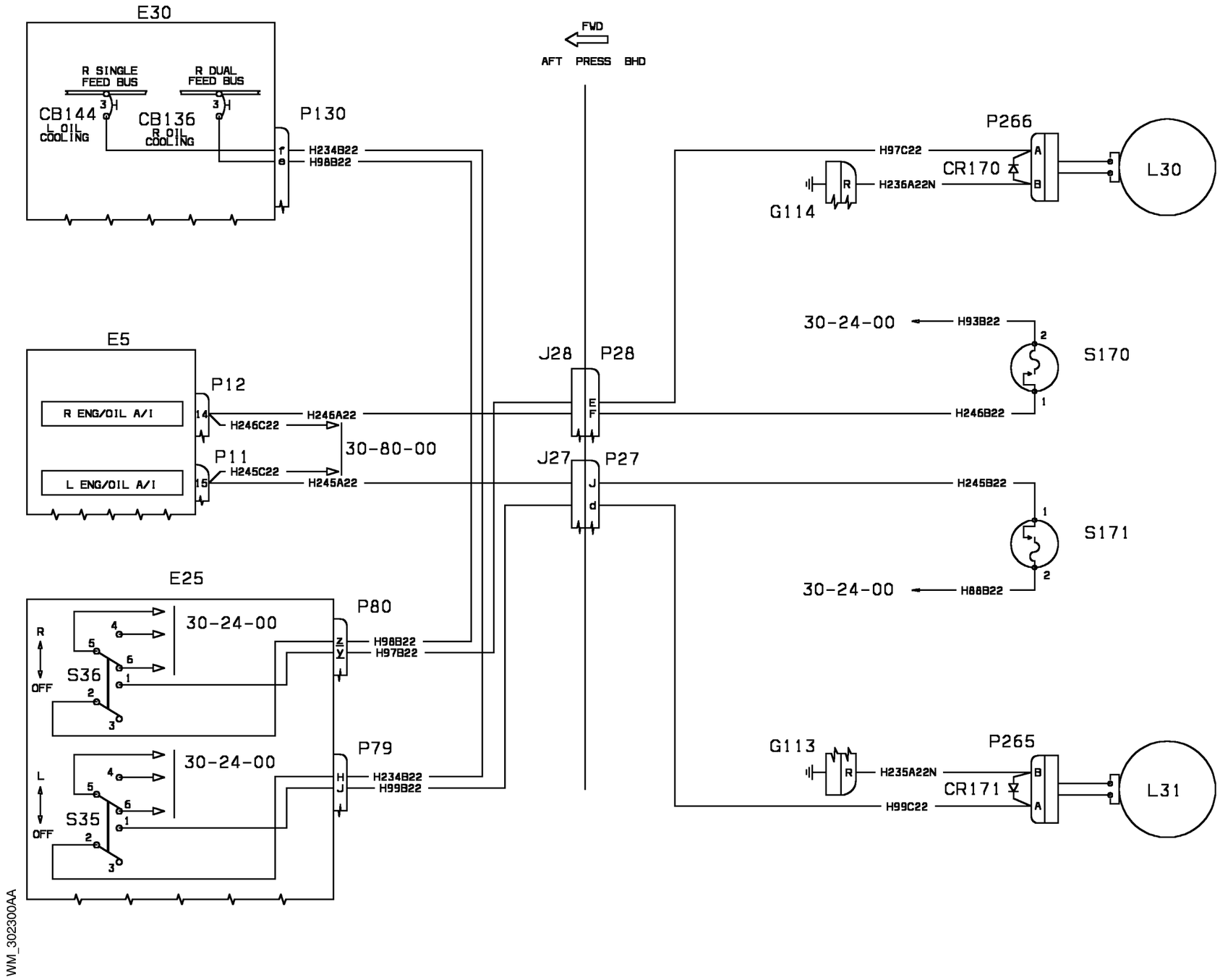


| EFFECTIVITY: | AIR INTAKES<br>Air Intake Lips A/I |
|---|---|

**30-23-00**

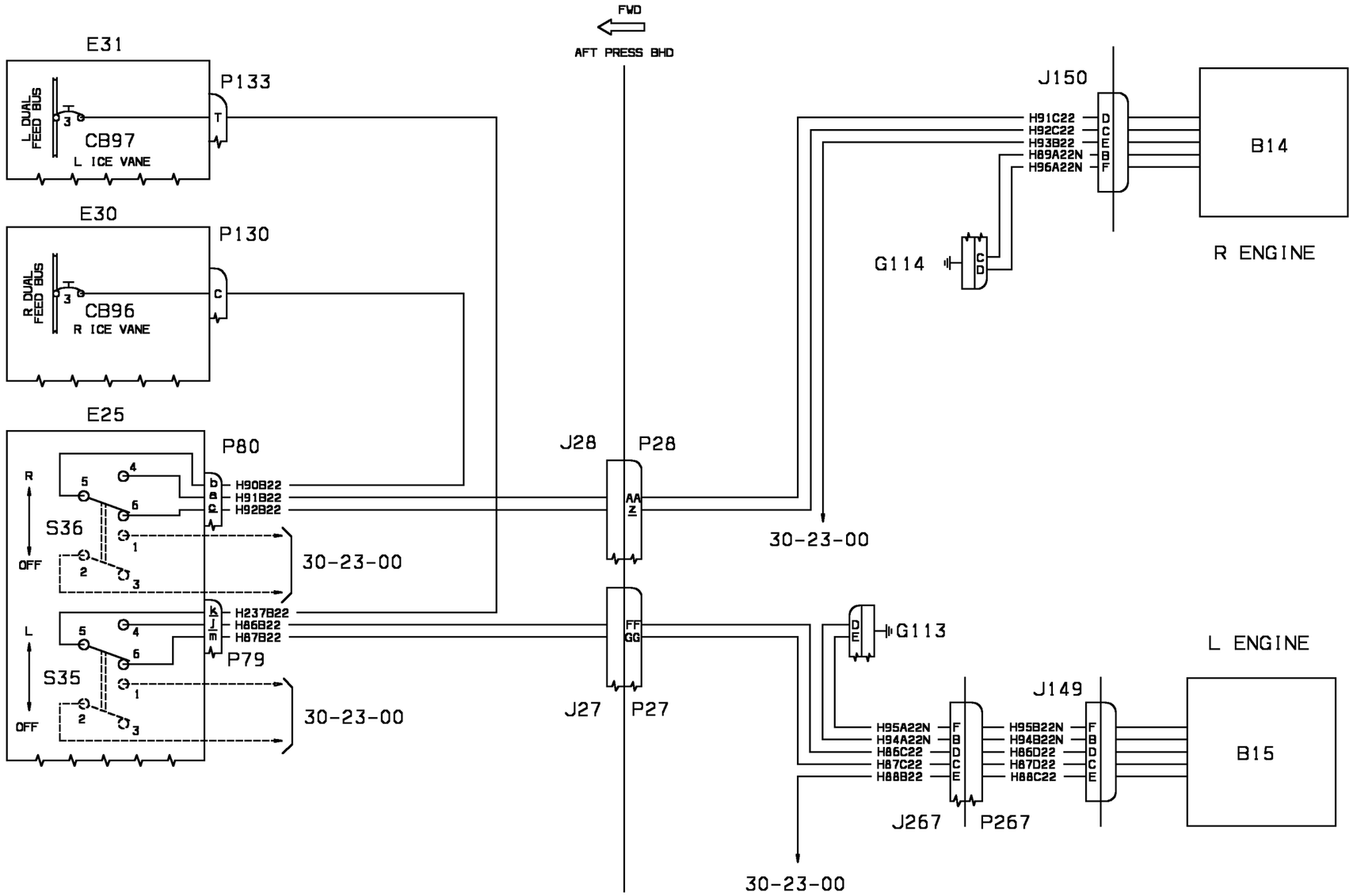
E31
P133
L DUAL FEED BUS
CB97
L ICE VANE
E30
P130
R DUAL FEED BUS
CB96
R ICE VANE
E25
P80
R
S36
OFF
L
S35
OFF
H90B22
H91B22
H92B22
H237B22
H86B22
H87B22
P79
30-23-00
30-23-00
FWD
AFT PRESS BHD
J28
P28
J27
P27
30-23-00
30-23-00
J150
H91C22
H92C22
H93B22
H89A22N
H96A22N
G114
B14
R ENGINE
G113
L ENGINE
J149
H95A22N
H94A22N
H86C22
H87C22
H88B22
H95B22N
H94B22N
H86D22
H87D22
H88C22
B15
J267
P267

WM_304200BL

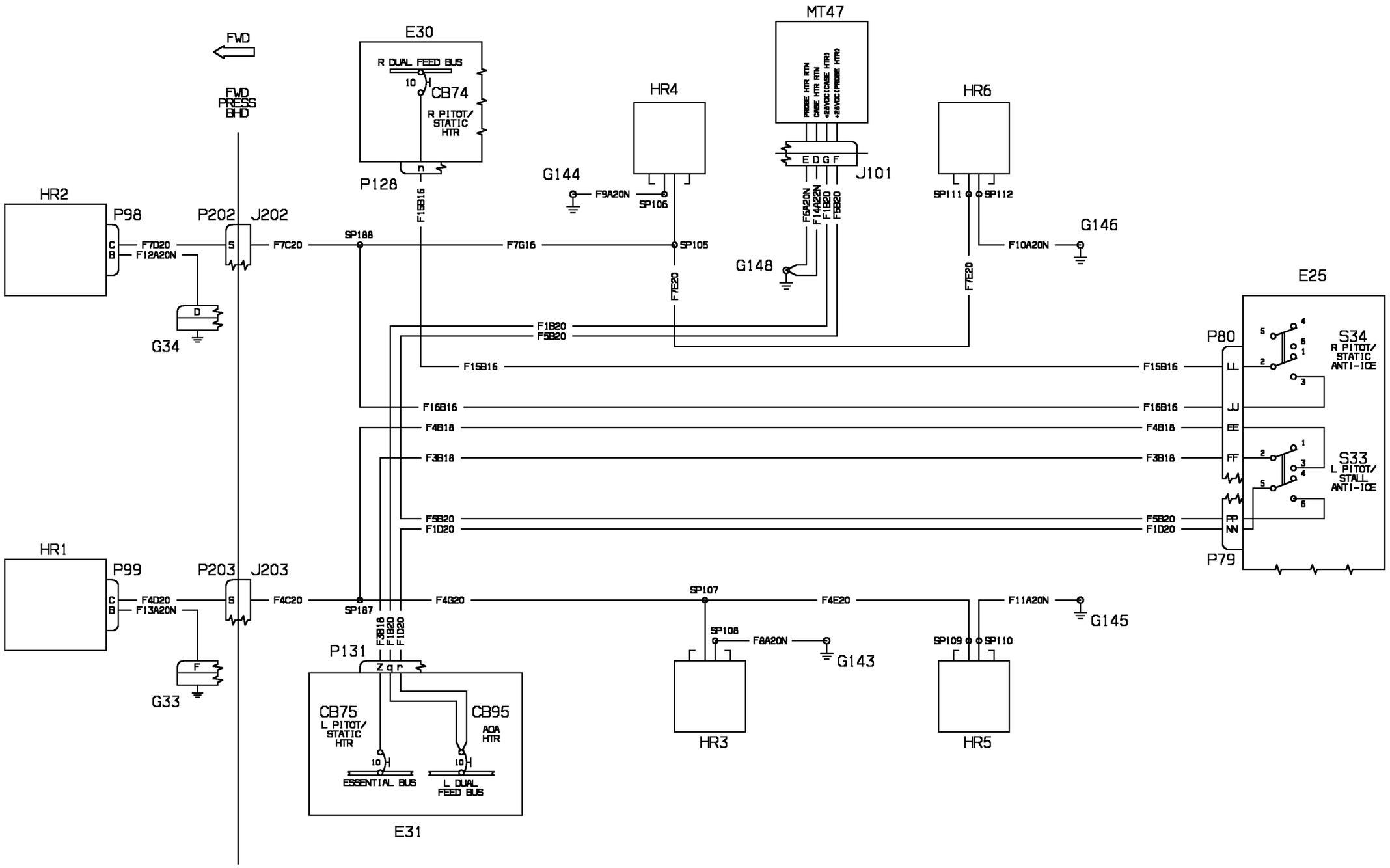


| EFFECTIVITY: | AIR INTAKES |
|---|---|
| 1004-1033 | Pitot, Static, Stall HTR |

**30-30-00**

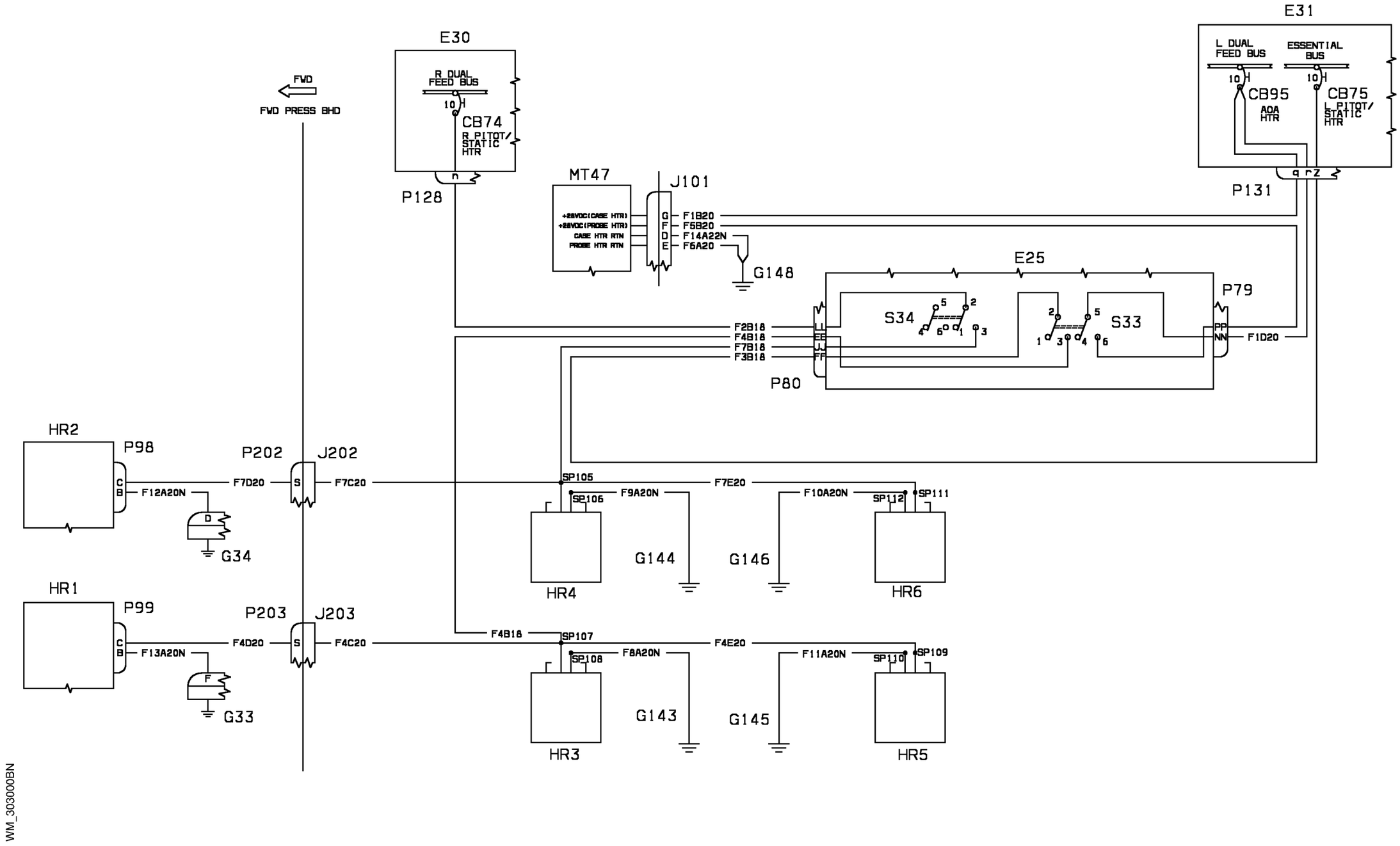
FWD
FWD PRESS BHD
E30
R DUAL FEED BUS
10
CB74
R PITOT/ STATIC HTR
P128
E31
L DUAL FEED BUS
ESSENTIAL BUS
CB95
AOA HTR
CB75
L PITOT/ STATIC HTR
P131
MT47
J101
+28VDC(CASE HTR)
+28VDC(PROBE HTR)
CASE HTR RTN
PROBE HTR RTN
G F1B20
F F5B20
D F14A22N
E F6A20
G148
E25
S34
S33
P79
PP
NN
F1D20
F2B18
F4B18
F7B18
F3B18
P80
HR2
P98
P202
J202
F7D20
F12A20N
F7C20
G34
SP105
F7E20
SP106
F9A20N
G144
HR4
F10A20N
SP112
SP111
G146
HR6
HR1
P99
P203
J203
F4D20
F13A20N
F4C20
G33
F4B18
SP107
F4E20
SP108
F8A20N
G143
HR3
F11A20N
SP110
SP109
G145
HR5
WM_303000BN

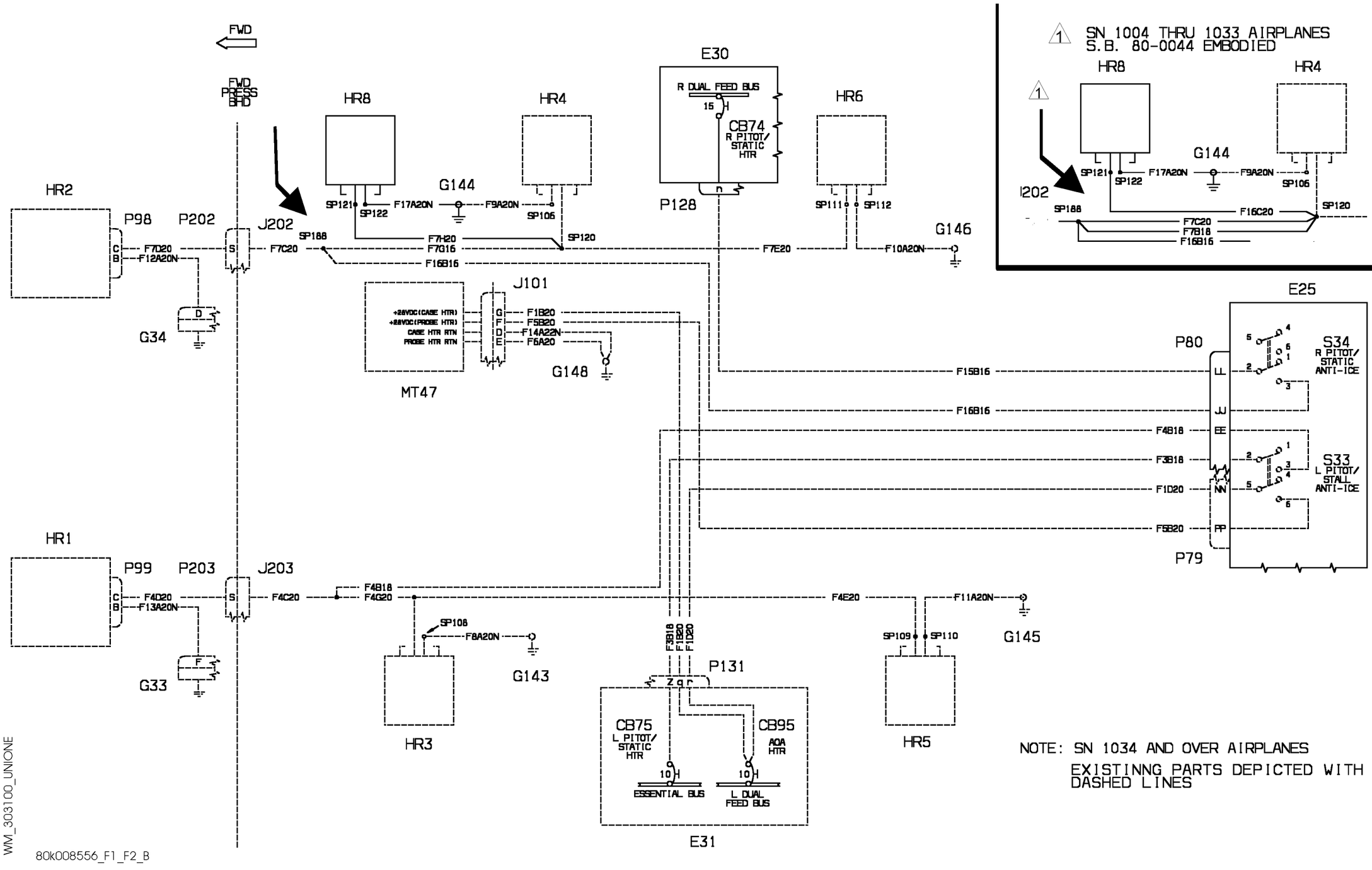
FWD
FWD PRESS BHD
HR2
P98
P202
J202
SP188
F7D20
F12A20N
F7C20
G34
HR8
HR4
G144
SP121
SP122
F17A20N
F9A20N
SP105
SP120
F7H20
F7G16
F16B16
E30
R DUAL FEED BUS
15 H
CB74
R PITOT/ STATIC HTR
P128
HR6
SP111
SP112
F7E20
F10A20N
G146
J101
+28VDC(CASE HTR)
+28VDC(PROBE HTR)
CASE HTR RTN
PROBE HTR RTN
F1B20
F5B20
F14A22N
F6A20
G148
MT47
F15B16
F16B16
F4B18
F3B18
F1D20
F5B20
E25
P80
S34
R PITOT/ STATIC ANTI-ICE
S33
L PITOT/ STALL ANTI-ICE
P79
HR1
P99
P203
J203
F4D20
F13A20N
F4C20
F4B18
F4G20
F4E20
F11A20N
G145
G33
SP108
F8A20N
G143
HR3
P131
CB75
L PITOT/ STATIC HTR
CB95
AOA HTR
10 H
ESSENTIAL BUS
L DUAL FEED BUS
E31
HR5
SP109
SP110
1 SN 1004 THRU 1033 AIRPLANES
S.B. 80-0044 EMBODIED
NOTE: SN 1034 AND OVER AIRPLANES
EXISTINNG PARTS DEPICTED WITH DASHED LINES
WM_303100_UNIONE
80K008556_F1_F2_B

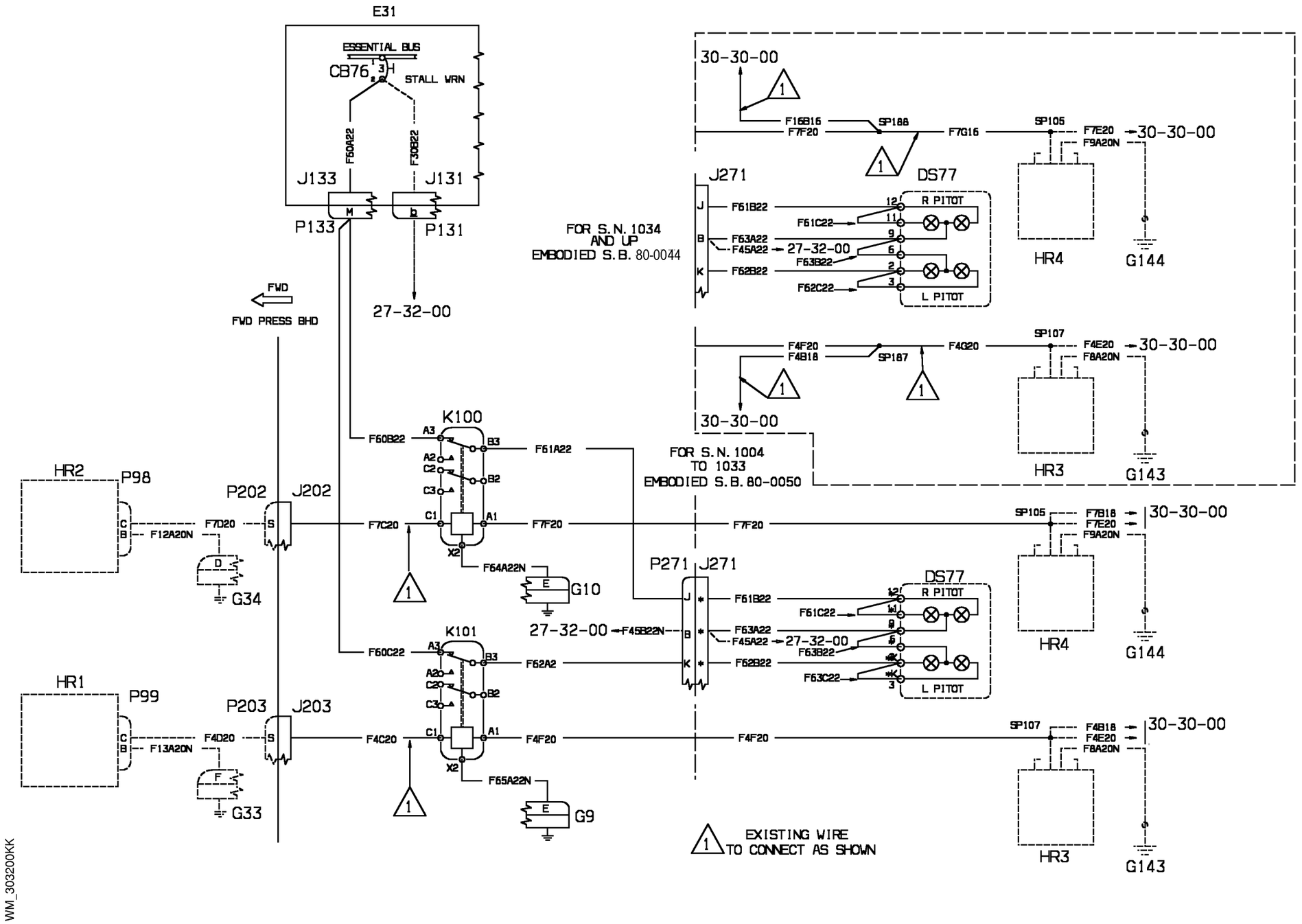


| EFFECTIVITY: | AIR INTAKES<br>Pitot Heating Monitor (Optional) |
|---|---|

**30-32-00**

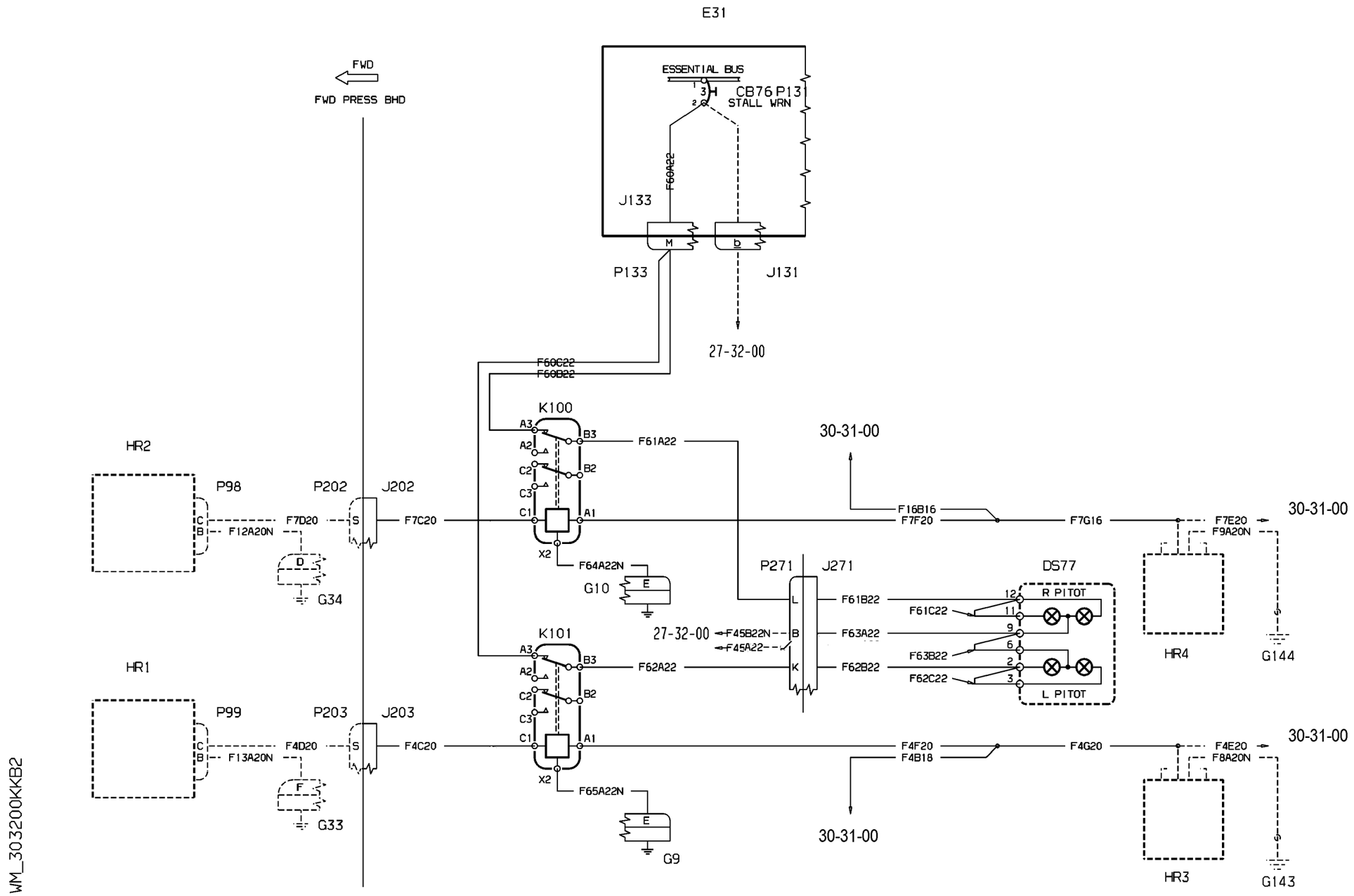
E31
FWD
FWD PRESS BHD
ESSENTIAL BUS
CB76 P131
STALL WRN
F60A22
J133
P133
J131
27-32-00
F60C22
F60B22
K100
K101
F61A22
F62A22
30-31-00
F16B16
F7F20
F7G16
F7E20
F9A20N
HR2
P98
P202
J202
F7D20
F12A20N
F7C20
G34
G10
F64A22N
HR1
P99
P203
J203
F4D20
F13A20N
F4C20
G33
G9
F65A22N
P271
J271
F61B22
F63A22
F62B22
27-32-00
F45B22N
F45A22
DS77
R PITOT
L PITOT
F61C22
F63B22
F62C22
HR4
G144
F4F20
F4B18
F4G20
F4E20
F8A20N
HR3
G143
WM_303200KKB2

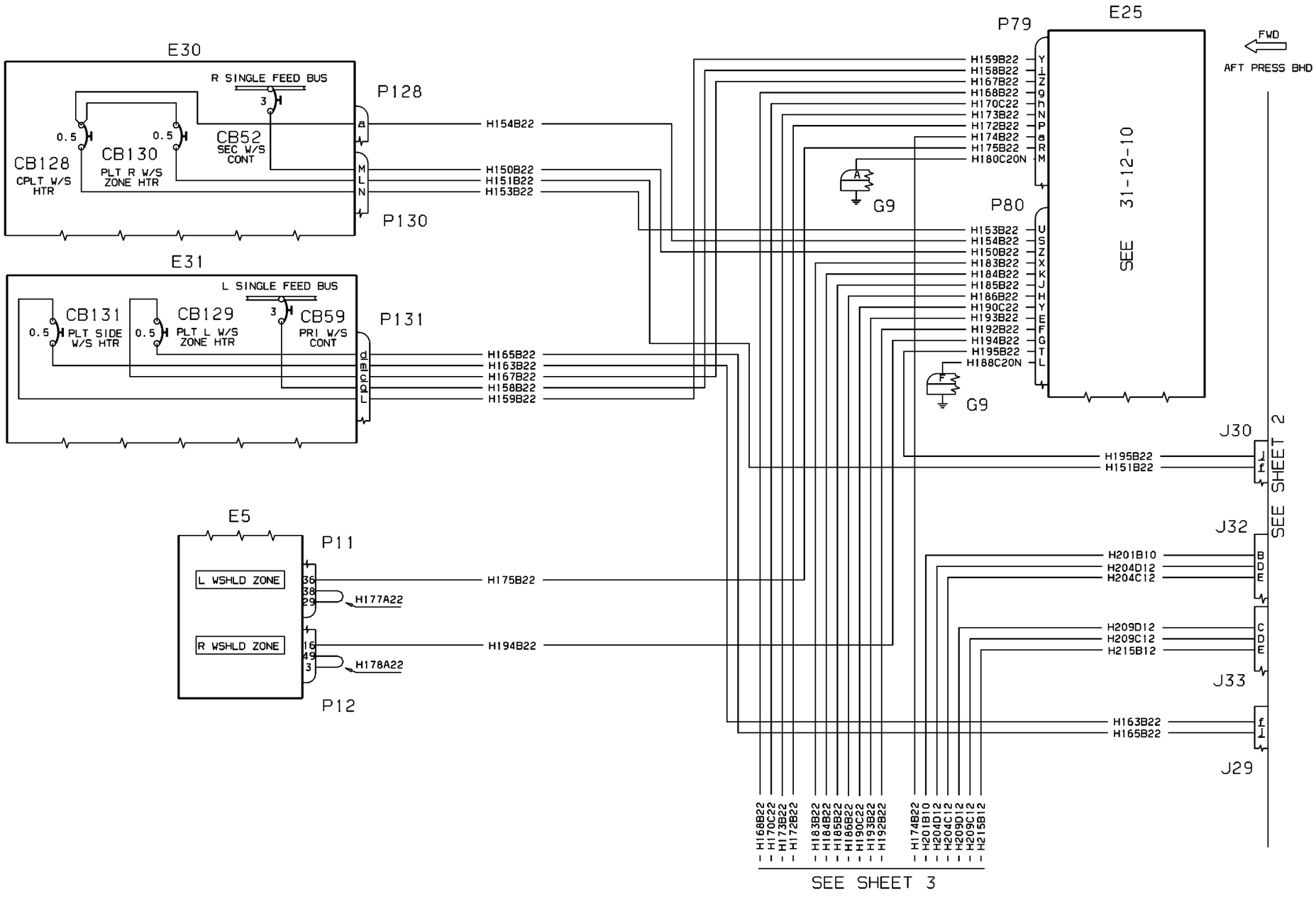


WM_304000_001_01

80-008523_C3

| EFFECTIVITY: | WINDOWS, WINDSHIELDS AND DOORS<br>Windshield Anti-ice/defog |
|---|---|

**30-40-00**

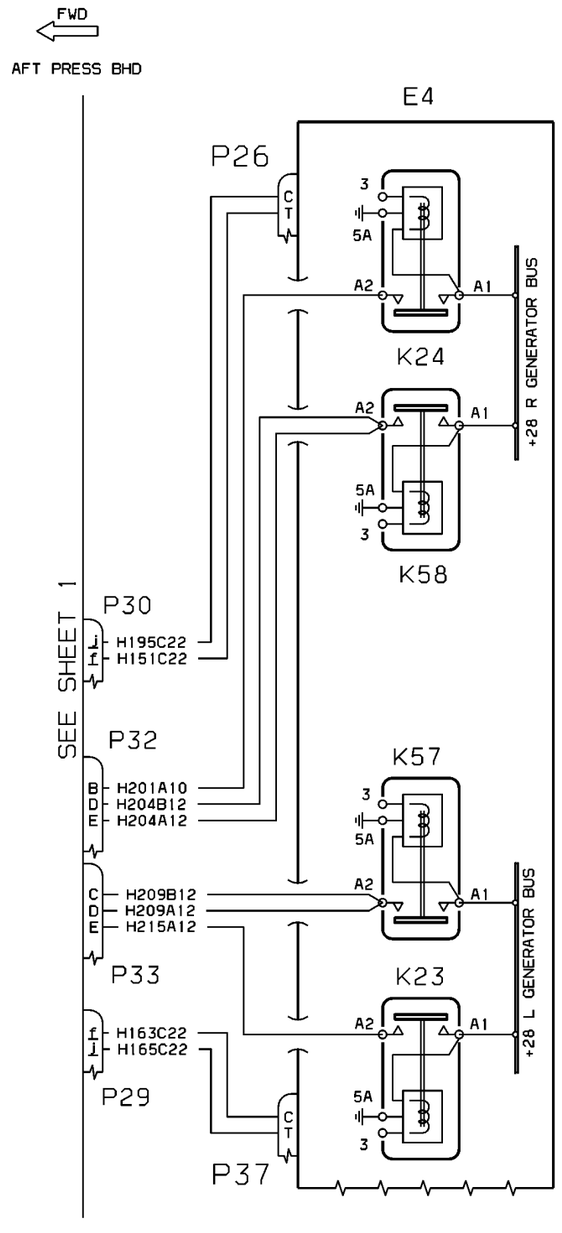


WM_304000AA2

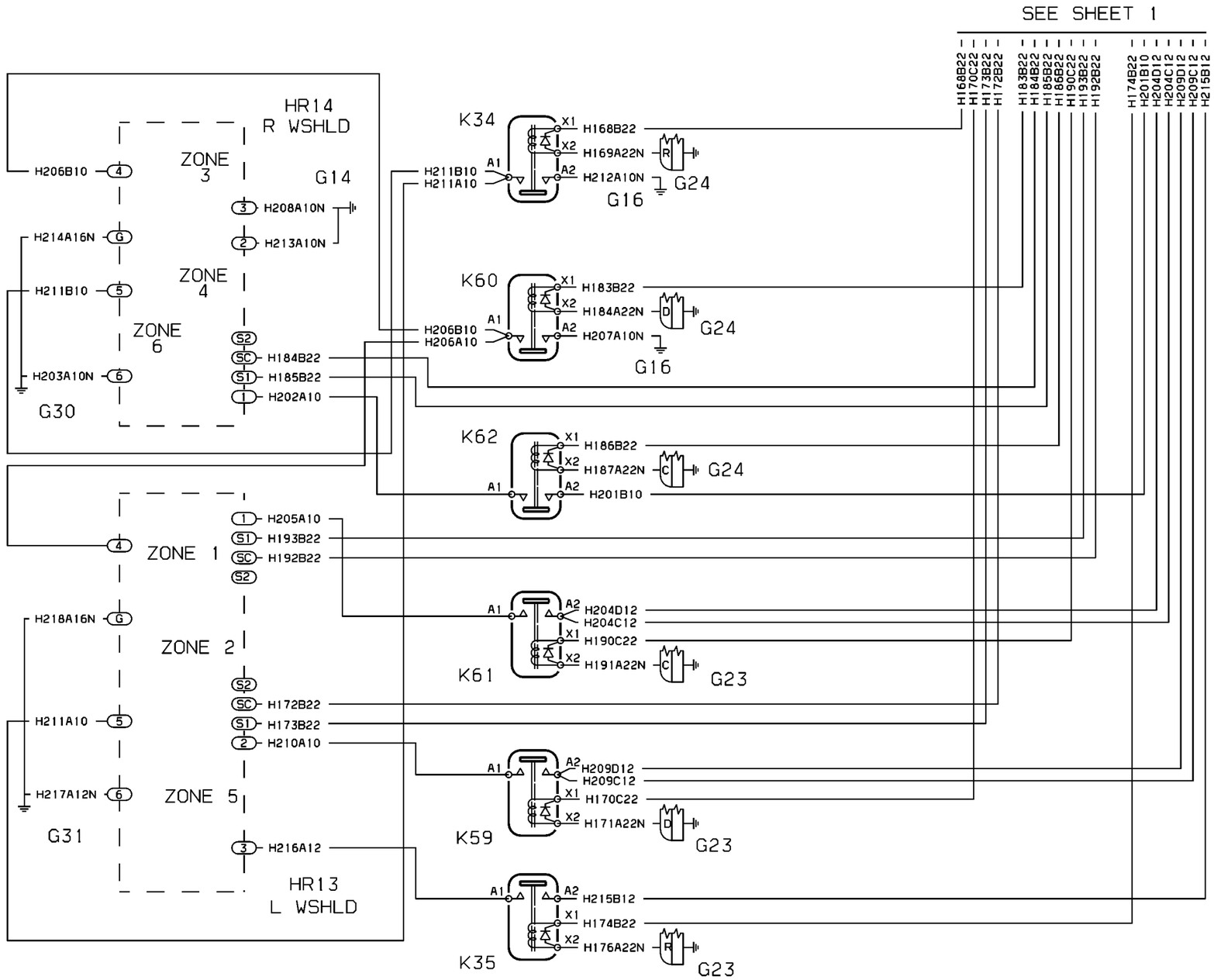


WM_304000AA3

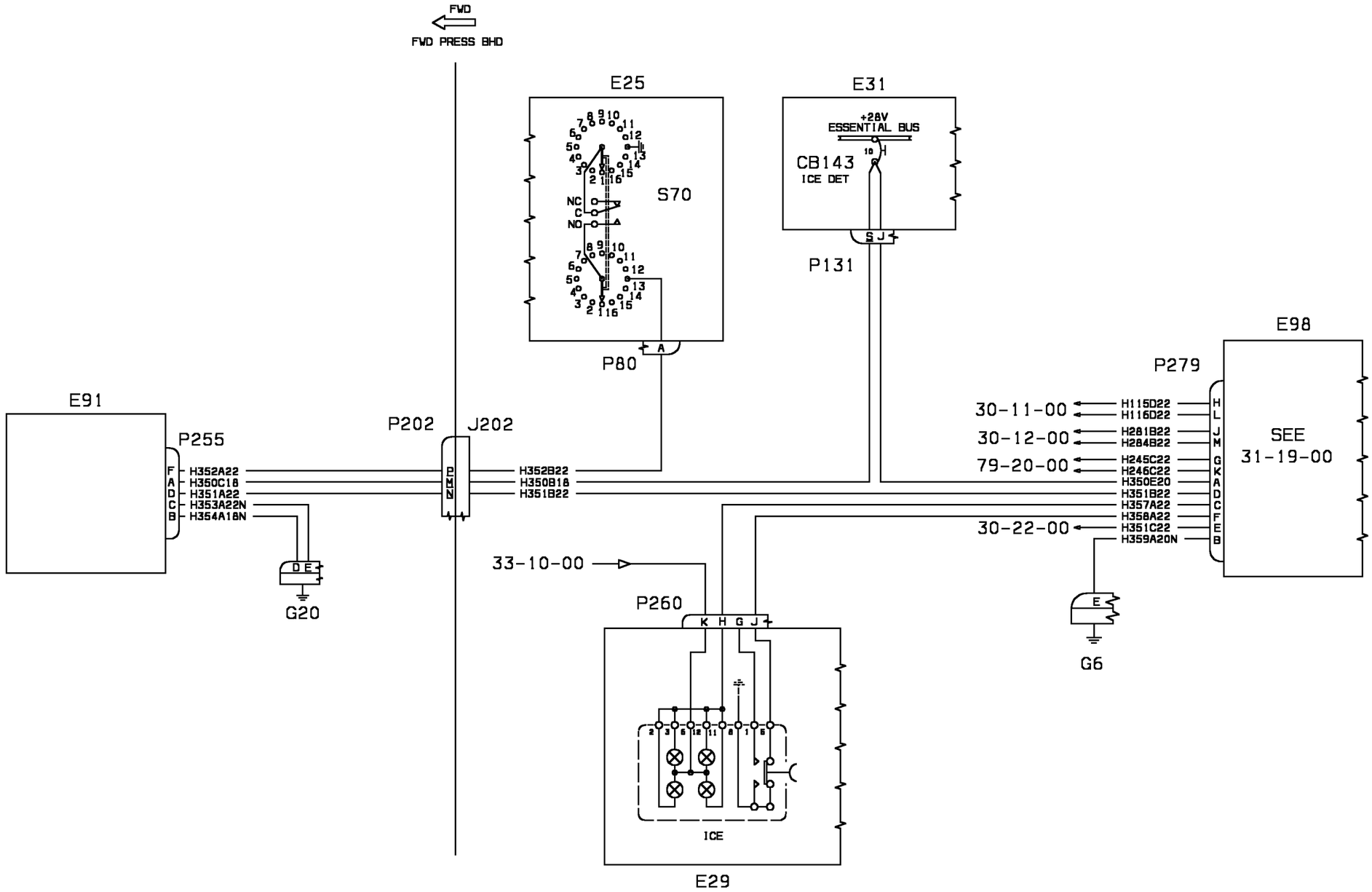


WM_308000BL

| EFFECTIVITY: | DETECTION |
|---|---|
| 1004-1020 | Ice Detector |

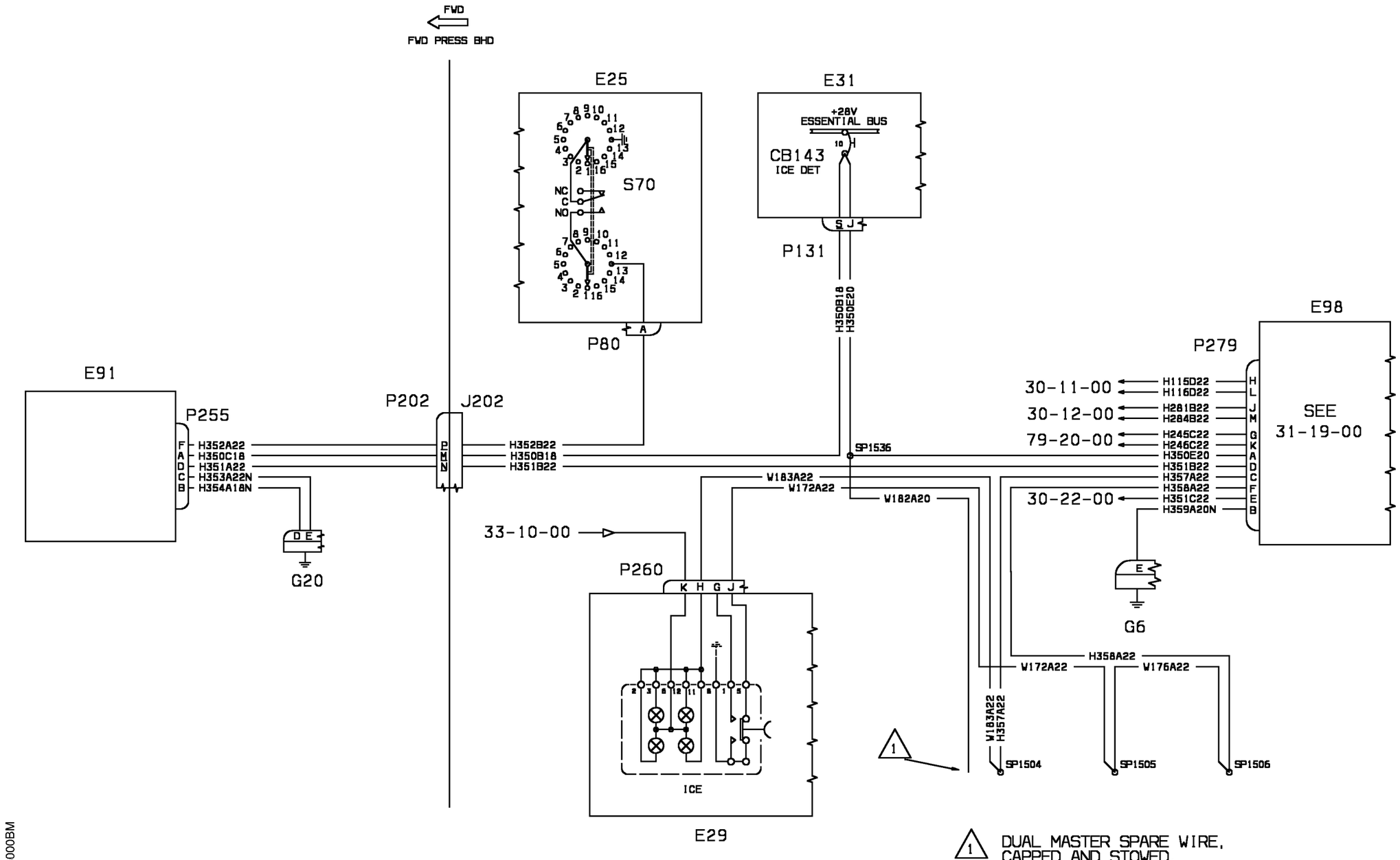
FWD
FWD PRESS BHD
E25
S70
NC
C
NO
P80
A
E31
+28V
ESSENTIAL BUS
CB143
ICE DET
P131
H350B18
H350E20
E98
P279
SEE
31-19-00
30-11-00
H115D22
H116D22
30-12-00
H281B22
H284B22
79-20-00
H245C22
H246C22
H350E20
H351B22
H357A22
H358A22
H351C22
H359A20N
30-22-00
SP1536
W183A22
W172A22
W182A20
E91
P255
F H352A22
A H350C18
D H351A22
C H353A22N
B H354A18N
D E
G20
P202
J202
P M N
H352B22
H350B18
H351B22
33-10-00
P260
K H G J
E
G6
H358A22
W172A22
W176A22
W183A22
H357A22
SP1504
SP1505
SP1506
1
ICE
E29
1 DUAL MASTER SPARE WIRE, CAPPED AND STOWED.

WM_308000BM

CHAPTER 31 - INDICATING/RECORDING SYSTEMS
LIST OF EFFECTIVE PAGES

| CHAPTER SECTION SUBJECT | PAGE | SHEET | DATE |
|---|---|---|---|
| 31 - LOEP | 1 | | Mar. 19/12 |
| | 2 | | Mar. 19/12 |
| | 3 | | Mar. 19/12 |
| | 4 | | Mar. 19/12 |
| 31 - TOC | 1 | | Mar. 19/12 |
| | 2 | | Mar. 19/12 |
| | 3 | | Mar. 19/12 |
| | 4 | | Mar. 19/12 |
| 31-11-10 | 1 | | Oct. 30/09 |
| 31-11-10 | 2 | | Oct. 30/09 |
| 31-11-20 | 1 | | Oct. 30/09 |
| 31-11-30 | 1 | | Oct. 30/09 |
| 31-11-30 | 2 | | Oct. 30/09 |
| 31-12-10 | 1 | 1 | Oct. 30/09 |
| 31-12-10 | 1 | 2 | Oct. 30/09 |
| 31-12-10 | 2 | 1 | Oct. 30/09 |
| 31-12-10 | 2 | 2 | Oct. 30/09 |
| 31-12-11 | 1 | | Oct. 30/09 |
| 31-12-20 | 1 | 1 | Oct. 30/09 |
| 31-12-20 | 1 | 2 | Oct. 30/09 |
| 31-12-20 | 2 | 1 | Oct. 30/09 |
| 31-12-20 | 2 | 2 | Oct. 30/09 |
| 31-12-20 | 3 | 1 | Oct. 30/09 |
| 31-12-20 | 3 | 2 | Oct. 30/09 |
| 31-12-20 | 4 | 1 | Mar. 19/12 |
| 31-12-20 | 4 | 2 | Oct. 30/09 |
| 31-12-20 | 5 | 1 | Oct. 30/09 |
| 31-12-20 | 5 | 2 | Oct. 30/09 |
| 31-12-30 | 1 | | Oct. 30/09 |
| 31-12-30 | 2 | | Oct. 30/09 |
| 31-12-30 | 3 | | Oct. 30/09 |
| 31-12-30 | 4 | | Oct. 30/09 |
| 31-12-40 | 1 | | Oct. 30/09 |
| 31-12-41 | 1 | | Oct. 30/09 |
| 31-12-50 | 1 | 1 | Oct. 30/09 |
| 31-12-50 | 1 | 2 | Oct. 30/09 |

*Continued on the next page*

| CHAPTER SECTION SUBJECT | PAGE | SHEET | DATE |
|---|---|---|---|
| 31-12-50 | 1 | 3 | Oct. 30/09 |
| 31-12-50 | 1 | 4 | Oct. 30/09 |
| 31-12-50 | 2 | 1 | Oct. 30/09 |
| 31-12-50 | 2 | 2 | Oct. 30/09 |
| 31-12-50 | 2 | 3 | Oct. 30/09 |
| 31-12-50 | 2 | 4 | Oct. 30/09 |
| 31-12-60 | 1 | 1 | Oct. 30/09 |
| 31-12-60 | 1 | 2 | Oct. 30/09 |
| 31-12-60 | 1 | 3 | Oct. 30/09 |
| 31-13-10 | 1 | | Oct. 30/09 |
| 31-13-11 | 1 | | Oct. 30/09 |
| 31-13-20 | 1 | | Oct. 30/09 |
| 31-13-20 | 2 | | Oct. 30/09 |
| 31-13-20 | 3 | | Oct. 30/09 |
| 31-13-21 | 1 | | Oct. 30/09 |
| 31-13-21 | 2 | | Oct. 30/09 |
| 31-13-30 | 1 | | Oct. 30/09 |
| 31-13-31 | 1 | | Oct. 30/09 |
| 31-13-31 | 2 | | Oct. 30/09 |
| 31-14-10 | 1 | | Oct. 30/09 |
| 31-14-11 | 1 | | Oct. 30/09 |
| 31-14-14 | 1 | | Oct. 30/09 |
| 31-14-14 | 2 | | Oct. 30/09 |
| 31-14-16 | 1 | | Oct. 30/09 |
| 31-14-17 | 1 | | Oct. 30/09 |
| 31-14-18 | 1 | | Oct. 30/09 |
| 31-14-19 | 1 | | Oct. 30/09 |
| 31-14-20 | 1 | | Oct. 30/09 |
| 31-14-30 | 1 | 1 | Oct. 30/09 |
| 31-14-30 | 1 | 2 | Oct. 30/09 |
| 31-14-40 | 1 | 1 | Oct. 30/09 |
| 31-14-40 | 1 | 2 | Oct. 30/09 |
| 31-14-40 | 1 | 3 | Oct. 30/09 |
| 31-14-40 | 1 | 4 | Oct. 30/09 |
| 31-14-50 | 1 | | Oct. 30/09 |
| 31-14-50 | 2 | | Oct. 30/09 |
| 31-14-50 | 3 | | Oct. 30/09 |
| 31-14-51 | 1 | | Oct. 30/09 |
| 31-15-10 | 1 | 1 | Oct. 30/09 |
| 31-15-10 | 1 | 2 | Oct. 30/09 |
| 31-15-10 | 1 | 3 | Oct. 30/09 |

*Continued on the next page*

| CHAPTER SECTION SUBJECT | PAGE | SHEET | DATE |
|---|---|---|---|
| 31-15-10 | 1 | 4 | Oct. 30/09 |
| 31-15-10 | 2 | 1 | Oct. 30/09 |
| 31-15-10 | 2 | 2 | Oct. 30/09 |
| 31-15-10 | 2 | 3 | Oct. 30/09 |
| 31-15-10 | 2 | 4 | Oct. 30/09 |
| 31-15-10 | 3 | 1 | Oct. 30/09 |
| 31-15-10 | 3 | 2 | Oct. 30/09 |
| 31-15-10 | 3 | 3 | Oct. 30/09 |
| 31-15-10 | 3 | 4 | Oct. 30/09 |
| 31-15-10 | 4 | 1 | Oct. 30/09 |
| 31-15-10 | 4 | 2 | Oct. 30/09 |
| 31-15-10 | 4 | 3 | Oct. 30/09 |
| 31-15-10 | 4 | 4 | Oct. 30/09 |
| 31-15-10 | 5 | 1 | Oct. 30/09 |
| 31-15-10 | 5 | 2 | Oct. 30/09 |
| 31-15-10 | 5 | 3 | Oct. 30/09 |
| 31-15-10 | 5 | 4 | Oct. 30/09 |
| 31-15-10 | 6 | 1 | Oct. 30/09 |
| 31-15-10 | 6 | 2 | Oct. 30/09 |
| 31-15-10 | 6 | 3 | Oct. 30/09 |
| 31-15-10 | 6 | 4 | Oct. 30/09 |
| 31-16-10 | 1 | | Oct. 30/09 |
| 31-17-10 | 1 | | Oct. 30/09 |
| 31-17-20 | 1 | | Oct. 30/09 |
| 31-18-00 | 1 | | Oct. 30/09 |
| 31-19-00 | 1 | | Oct. 30/09 |
| 31-19-11 | 1 | | Oct. 30/09 |
| 31-20-00 | 1 | | Oct. 30/09 |
| 31-21-00 | 1 | | Oct. 30/09 |
| 31-30-00 | 1 | | Oct. 30/09 |
| 31-50-00 | 1 | | Oct. 30/09 |
| 31-50-00 | 2 | | Oct. 30/09 |
| 31-51-00 | 1 | | Oct. 30/09 |
| 31-52-00 | 1 | | Oct. 30/09 |
| 31-53-00 | 1 | | June 30/10 |
| 31-60-00 | 1 | | Oct. 30/09 |

INTENTIONALLY LEFT BLANK

CHAPTER 31 - INDICATING/RECORDING SYSTEMS
TABLE OF CONTENTS


| SUBJECT | CHAPTER SECTION SUBJECT | PAGE | SHEET |
|---|---|---|---|
| INSTRUMENT & CONTROL PANELS | | | |
| E1700 Utility C/B Panel (Opt 1) | 31-11-10 | 1 | |
| E1700 Utility C/B Panel (Opt 1 M,M,) | 31-11-10 | 2 | |
| E1700 Utility C/B Panel (Opt 2) | 31-11-20 | 1 | |
| E1700 Utility C/B Panel (Opt 10) | 31-11-30 | 1 | |
| E1700 Utility C/B Panel (Opt 10) | 31-11-30 | 2 | |
| Pilot Switch Panel | 31-12-10 | 1 | 1 |
| Pilot Switch Panel | 31-12-10 | 1 | 2 |
| Pilot Switch Panel | 31-12-10 | 2 | 1 |
| Pilot Switch Panel | 31-12-10 | 2 | 2 |
| Pilot Switch Panel (PCB12) | 31-12-11 | 1 | |
| Center Switch Panel | 31-12-20 | 1 | 1 |
| Center Switch Panel | 31-12-20 | 1 | 2 |
| Center Switch Panel | 31-12-20 | 2 | 1 |
| Center Switch Panel | 31-12-20 | 2 | 2 |
| Center Switch Panel | 31-12-20 | 3 | 1 |
| Center Switch Panel | 31-12-20 | 3 | 2 |
| Center Switch Panel, with E.C.S | 31-12-20 | 4 | 1 |
| Center Switch Panel, with E.C.S | 31-12-20 | 4 | 2 |
| Ctr Switch Pnl whitout FLoor diffus valve Switch | 31-12-20 | 5 | 1 |
| Ctr Switch Pnl whitout FLoor diffus valve Switch | 31-12-20 | 5 | 2 |
| Switch Panel-copilot | 31-12-30 | 1 | |
| Switch Panel-copilot | 31-12-30 | 2 | |
| Switch Panel-copilot | 31-12-30 | 3 | |
| Switch Panel-copilot Freon Kit (Optional) | 31-12-30 | 4 | |
| Dimmer Control Panel | 31-12-40 | 1 | |
| Control Panel-dimmer (PCB4) | 31-12-41 | 1 | |
| Circuit Breaker Panel-pilot | 31-12-50 | 1 | 1 |
| Circuit Breaker Panel-pilot | 31-12-50 | 1 | 2 |
| Circuit Breaker Panel-pilot | 31-12-50 | 1 | 3 |
| Circuit Breaker Panel-pilot | 31-12-50 | 1 | 4 |
| C / B Panel-pilot standard version | 31-12-50 | 2 | 1 |
| C / B Panel-pilot standard version | 31-12-50 | 2 | 2 |
| C / B Panel-pilot standard version | 31-12-50 | 2 | 3 |
| C / B Panel-pilot standard version | 31-12-50 | 2 | 4 |
| C / B Panel-Copilot standard version | 31-12-60 | 1 | 1 |


*Continued on the next page*

| SUBJECT | CHAPTER SECTION SUBJECT | PAGE | SHEET |
|---|---|---|---|
| INSTRUMENT & CONTROL PANELS (Cont.) | | | |
| C / B Panel-Copilot standard version | 31-12-60 | 1 | 2 |
| C / B Panel-Copilot standard version | 31-12-60 | 1 | 3 |
| Fuel Control Panel | 31-13-10 | 1 | |
| Fuel Control Panel (PCB2) | 31-13-11 | 1 | |
| Switch Panel-trim | 31-13-20 | 1 | |
| Switch Panel-trim | 31-13-20 | 2 | |
| Switch Panel-trim | 31-13-20 | 3 | |
| Switch Panel-trim (PCB3) | 31-13-21 | 1 | |
| Switch Panel-trim (PCB3) | 31-13-21 | 2 | |
| Control Panel-engine | 31-13-30 | 1 | |
| Control Panel-engine (PCB13) | 31-13-31 | 1 | |
| Control Panel-engine (PCB13) | 31-13-31 | 2 | |
| Bias Box (AE637) | 31-14-10 | 1 | |
| Control Panel-engine (PCB7) | 31-14-11 | 1 | |
| Bias Box Kit Uns 1 (a-b-d-k) Optional | 31-14-14 | 1 | |
| Bias Box Kit Uns 1 ( l ) Optional) | 31-14-14 | 2 | |
| Bias Box Kit-dual ADF (Optional) | 31-14-16 | 1 | |
| Kit-dual ADF (Pcb14) | 31-14-17 | 1 | |
| BIAS BOX- Kit Uns 1-a mmms AE862 (opt.) | 31-14-18 | 1 | |
| Bias Box Kit-TDR-94 (Optional) | 31-14-19 | 1 | |
| Bias Box Kit Cat 2 (Optional) | 31-14-20 | 1 | |
| Bias Box Kit (AE764) optional SMA | 31-14-30 | 1 | 1 |
| Bias Box Kit (AE764) optional SMA | 31-14-30 | 1 | 2 |
| Bias Box Kit (AE778) optional MM | 31-14-40 | 1 | 1 |
| Bias Box Kit (AE778) optional MM | 31-14-40 | 1 | 2 |
| Bias Box Kit (AE778) optional MM | 31-14-40 | 1 | 3 |
| Bias Box Kit (AE778) optional MM | 31-14-40 | 1 | 4 |
| Dim/xpndr adapter (AE691) | 31-14-50 | 1 | |
| Dim/xpndr adapter (AE765) | 31-14-50 | 2 | |
| Dim/Xpndr Adapter (AE779) | 31-14-50 | 3 | |
| DIM/XPNDR PCB26 PCB29 PCB25 | 31-14-51 | 1 | |
| Main Junction Box | 31-15-10 | 1 | 1 |
| Main Junction Box | 31-15-10 | 1 | 2 |
| Main Junction Box | 31-15-10 | 1 | 3 |
| Main Junction Box | 31-15-10 | 1 | 4 |
| Main Junction Box | 31-15-10 | 2 | 1 |
| Main Junction Box | 31-15-10 | 2 | 2 |
| Main Junction Box | 31-15-10 | 2 | 3 |
| Main Junction Box | 31-15-10 | 2 | 4 |


*Continued on the next page*

| SUBJECT | CHAPTER SECTION SUBJECT | PAGE | SHEET |
|---|---|---|---|
| INSTRUMENT & CONTROL PANELS (Cont.) | | | |
| Main Junction Box | 31-15-10 | 3 | 1 |
| Main Junction Box | 31-15-10 | 3 | 2 |
| Main Junction Box | 31-15-10 | 3 | 3 |
| Main Junction Box | 31-15-10 | 3 | 4 |
| Main Junction Box | 31-15-10 | 4 | 1 |
| Main Junction Box | 31-15-10 | 4 | 2 |
| Main Junction Box | 31-15-10 | 4 | 3 |
| Main Junction Box | 31-15-10 | 4 | 4 |
| Main Junction Box | 31-15-10 | 5 | 1 |
| Main Junction Box | 31-15-10 | 5 | 2 |
| Main Junction Box | 31-15-10 | 5 | 3 |
| Main Junction Box | 31-15-10 | 5 | 4 |
| Main Junction Box | 31-15-10 | 6 | 1 |
| Main Junction Box | 31-15-10 | 6 | 2 |
| Main Junction Box | 31-15-10 | 6 | 3 |
| Main Junction Box | 31-15-10 | 6 | 4 |
| Control Unit-freon (Optional) | 31-16-10 | 1 | |
| EFIS Panel | 31-17-10 | 1 | |
| EFIS Panel PER CAT 2 (optional) | 31-17-20 | 1 | |
| Throttle Quadrant | 31-18-00 | 1 | |
| Monitor Unit-anti Ice | 31-19-00 | 1 | |
| Monitor Unit-anti Ice (PCB15) | 31-19-11 | 1 | |
| Clock | 31-20-00 | 1 | |
| Secondary Clock (Optional) | 31-21-00 | 1 | |
| Fatigue Meter (Optional) | 31-30-00 | 1 | |
| CENTRAL WARNING SYSTEMS | | | |
| Annunciator System | 31-50-00 | 1 | |
| Annunciator System | 31-50-00 | 2 | |
| Aural Warning System | 31-51-00 | 1 | |
| Dual Master Annunciator (optional) | 31-52-00 | 1 | |
| Aural Warning Modification | 31-53-00 | 1 | |
| Multifunction Display | 31-60-00 | 1 | |

INTENTIONALLY LEFT BLANK

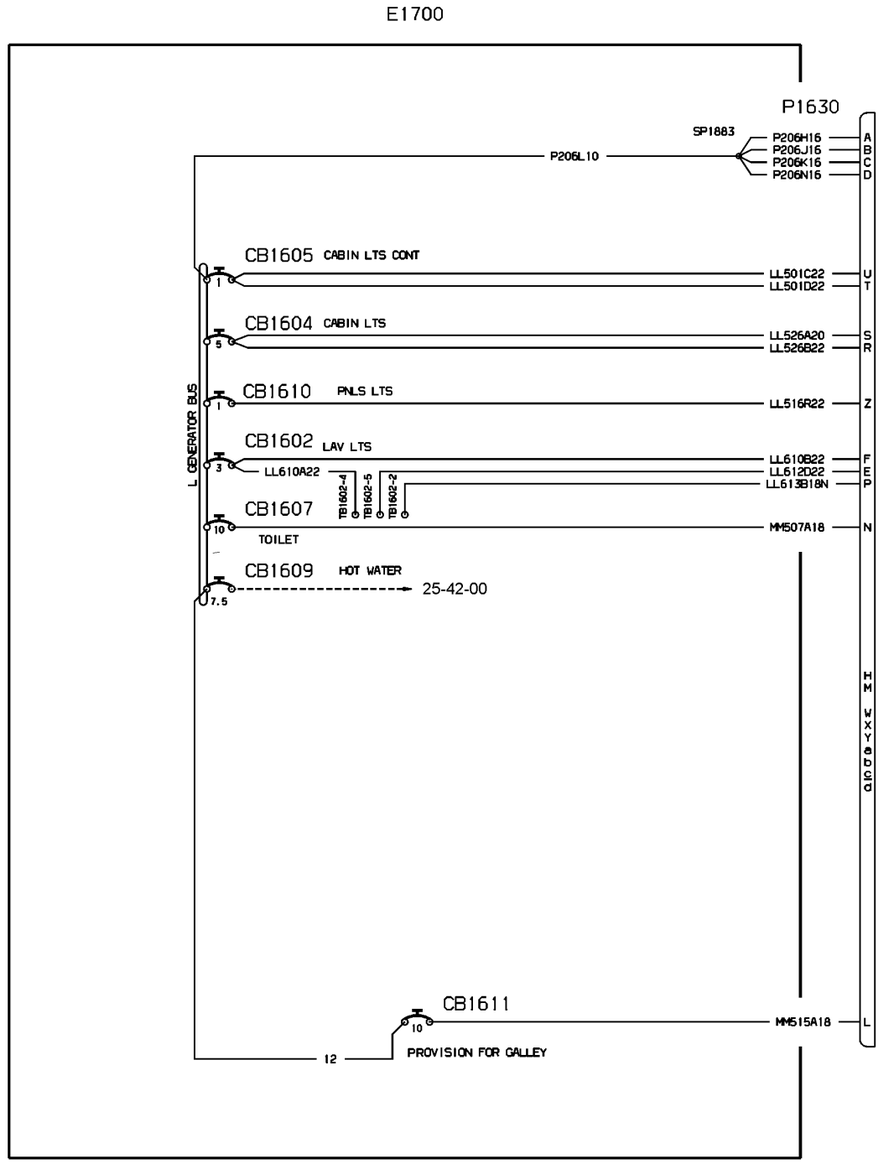


WM_311110_P1_S1

80-908106_B1

| EFFECTIVITY: | INSTRUMENT & CONTROL PANELS<br>E1700 Utility C/B Panel (Opt 1) |
|---|---|

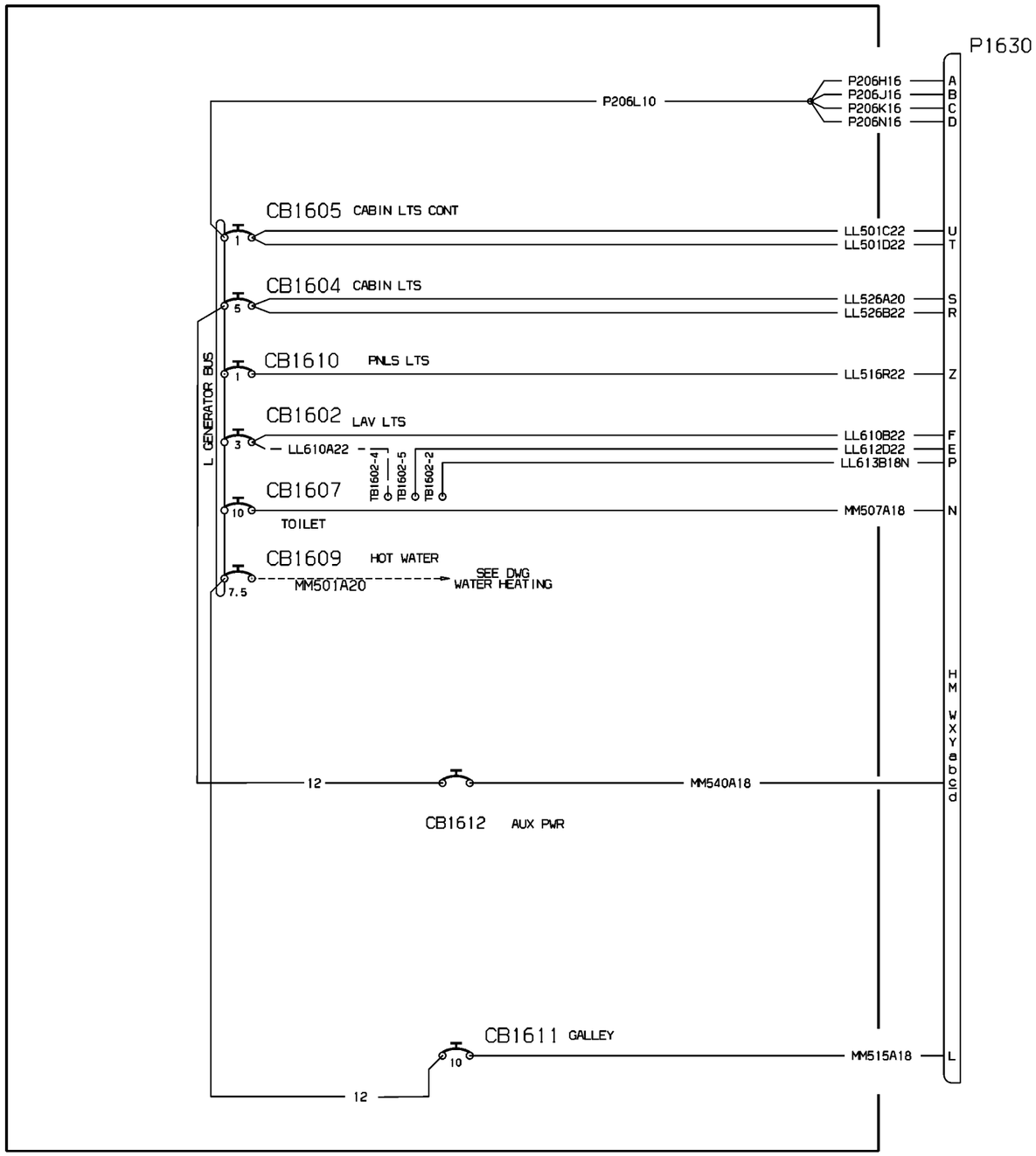


Note: INTERIOR Opt 1 new version allowing an easy replacement whith Opt 10, if SB 80-0218 eEmbodied

WM_311110_P2_S1

80-908106_F4_C

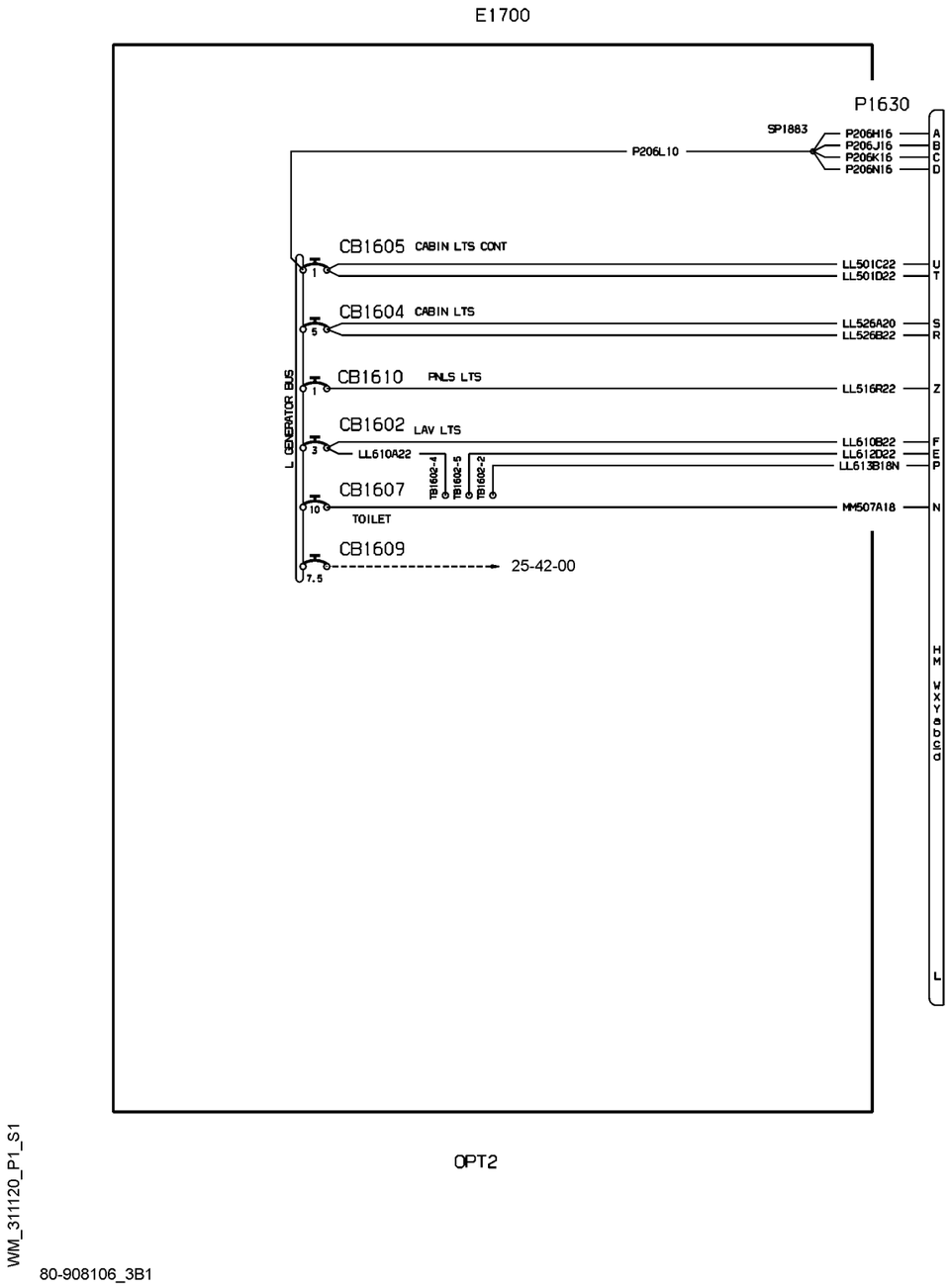


WM_311120_P1_S1

80-908106_3B1

| EFFECTIVITY: | INSTRUMENT & CONTROL PANELS<br>E1700 Utility C/B Panel (Opt 2) |
|---|---|

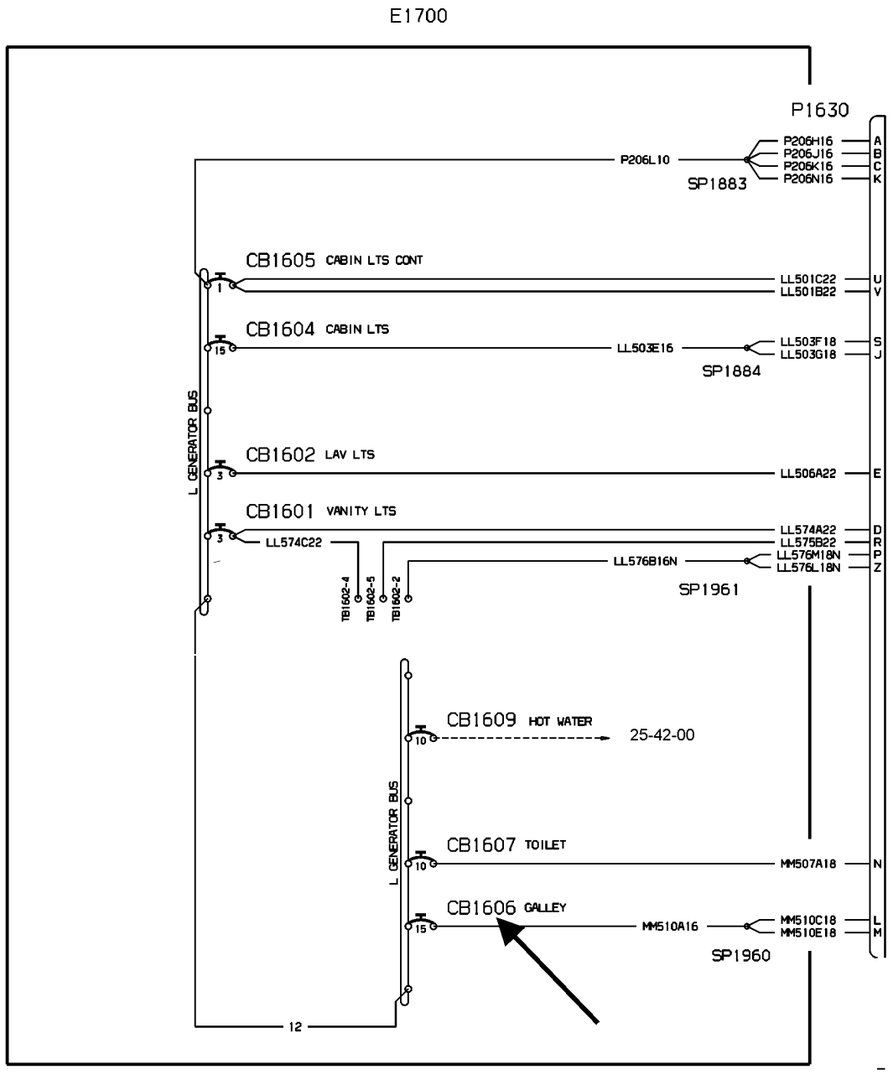


NC 0004 TO 1033

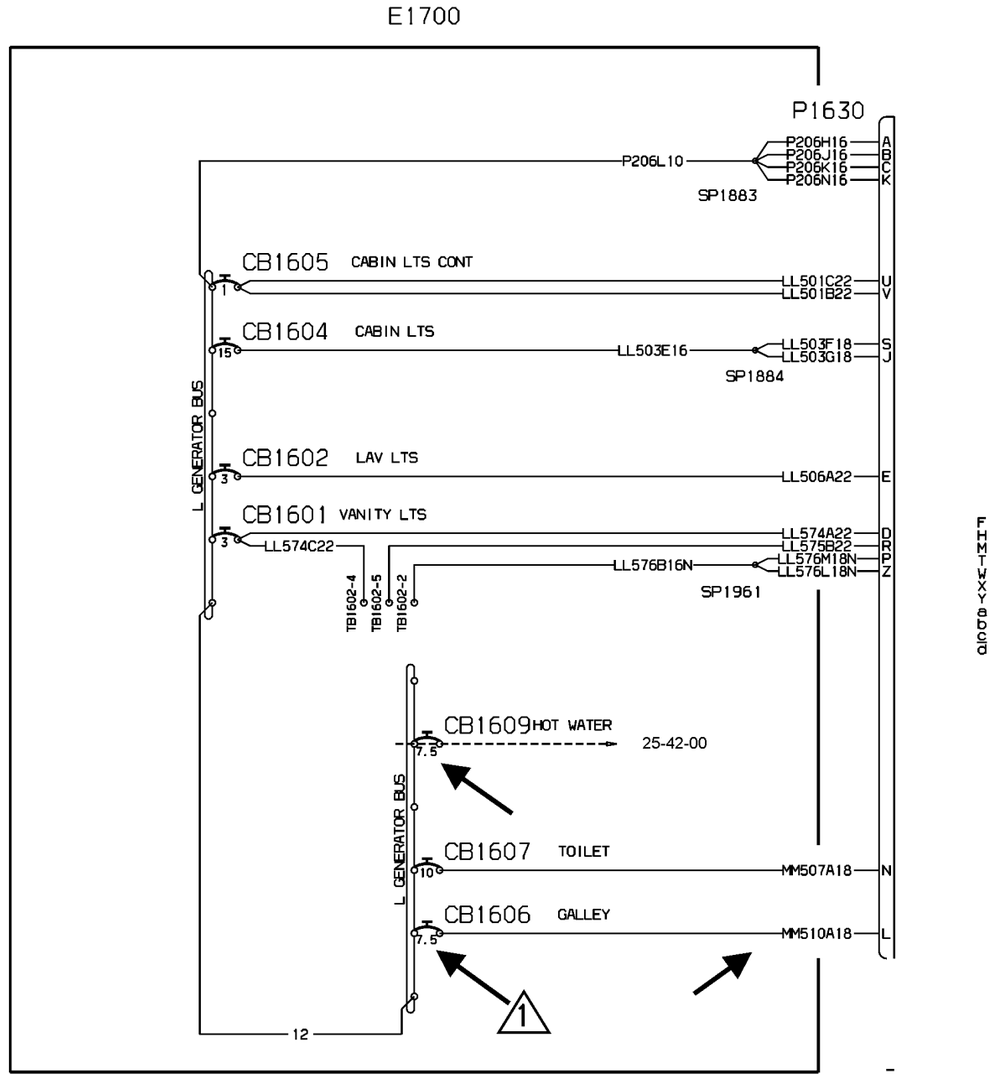


NC 1034 TO 9999

NOTE: AIRPLANES WITH OPTIONS 10 & 10B CABIN ARANGEMENTS

1 THE CB1606 IS NOT INSTALLATED ON AIRPLANES N/C 1032 WITH OPTION 19 CABIN ARANGEMENT, (SB 80-0261 EMBODIED)

WM_311130_P1_S1

80-908105_1/A1_2/A1

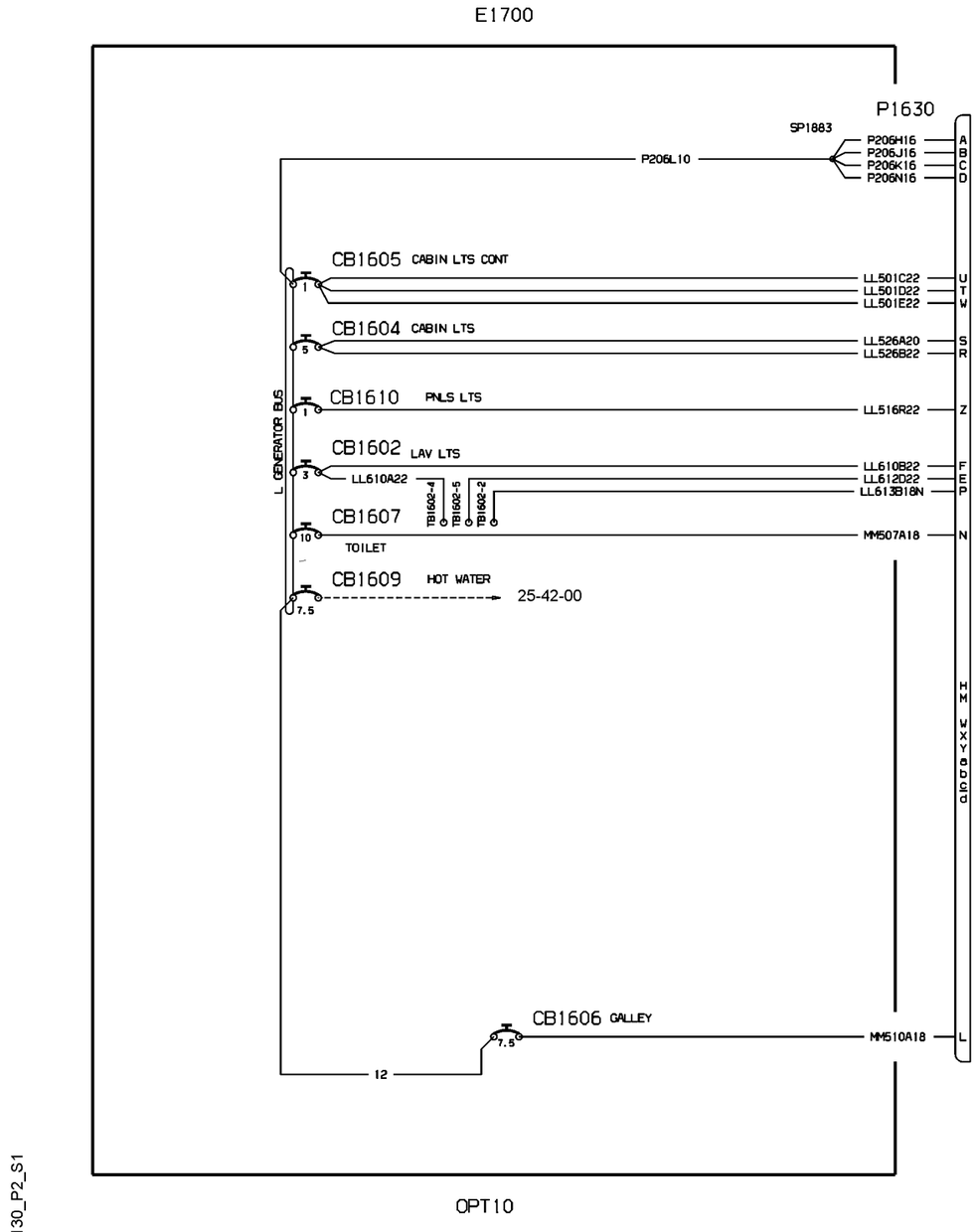
E1700
P1630
SP1883
P206H16
P206J16
P206K16
P206N16
P206L10
A
B
C
D
CB1605 CABIN LTS CONT
1
LL501C22
LL501D22
LL501E22
U
T
W
CB1604 CABIN LTS
5
LL526A20
LL526B22
S
R
CB1610 PNLS LTS
1
LL516R22
Z
L GENERATOR BUS
CB1602 LAV LTS
3
LL610B22
LL612D22
LL613B18N
F
E
P
LL610A22
TB1602-4
TB1602-5
TB1602-2
CB1607
10
TOILET
MM507A18
N
CB1609 HOT WATER
7.5
25-42-00
H M V X Y G G G
CB1606 GALLEY
7.5
MM510A18
L
12
OPT10
WM_311130_P2_S1
80-908106_2/B1

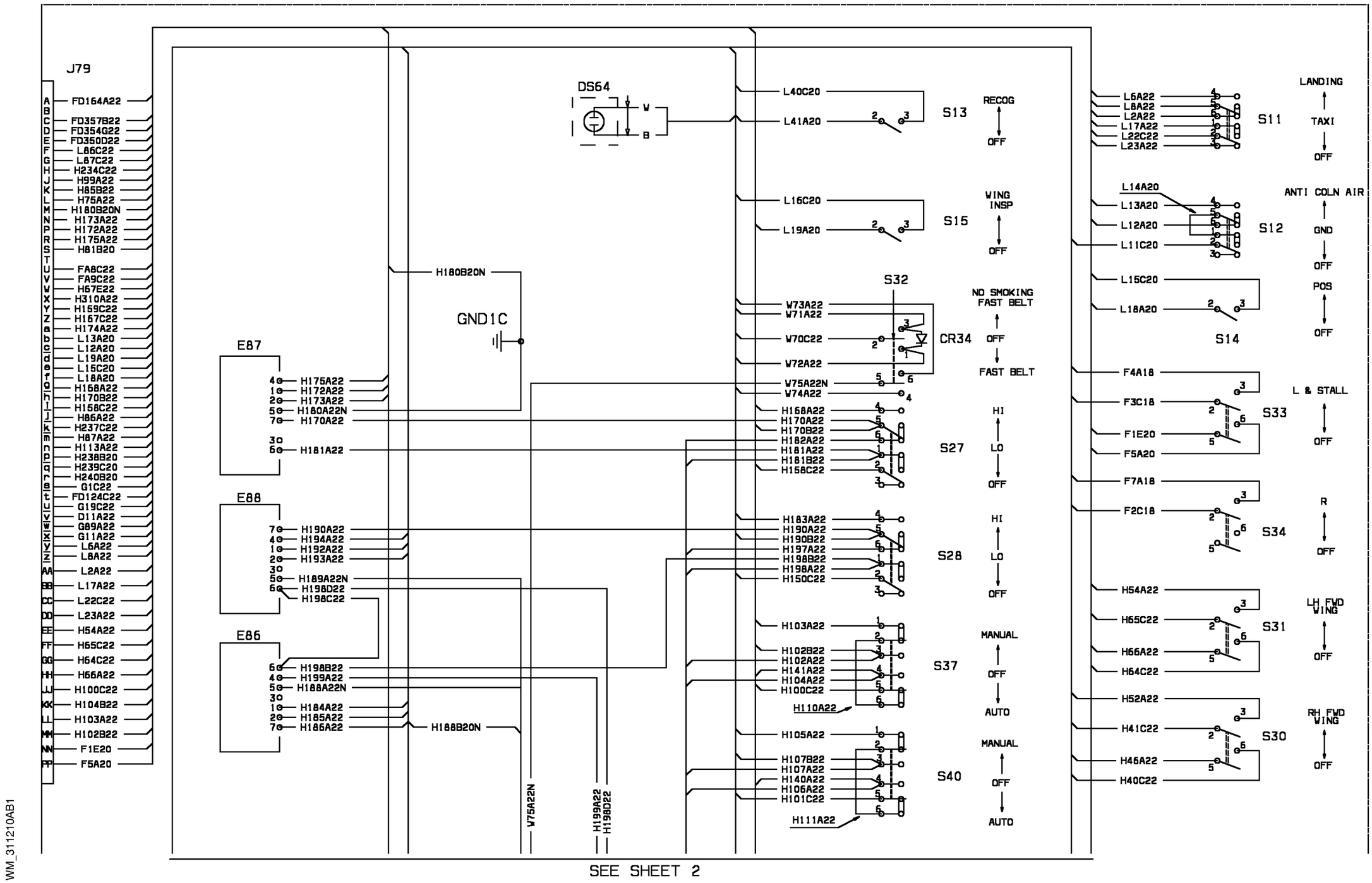


WM_311210AB1

| EFFECTIVITY: | INSTRUMENT & CONTROL PANELS |
|---|---|
| 1004-1015 | Pilot Switch Panel |

**31-12-10**

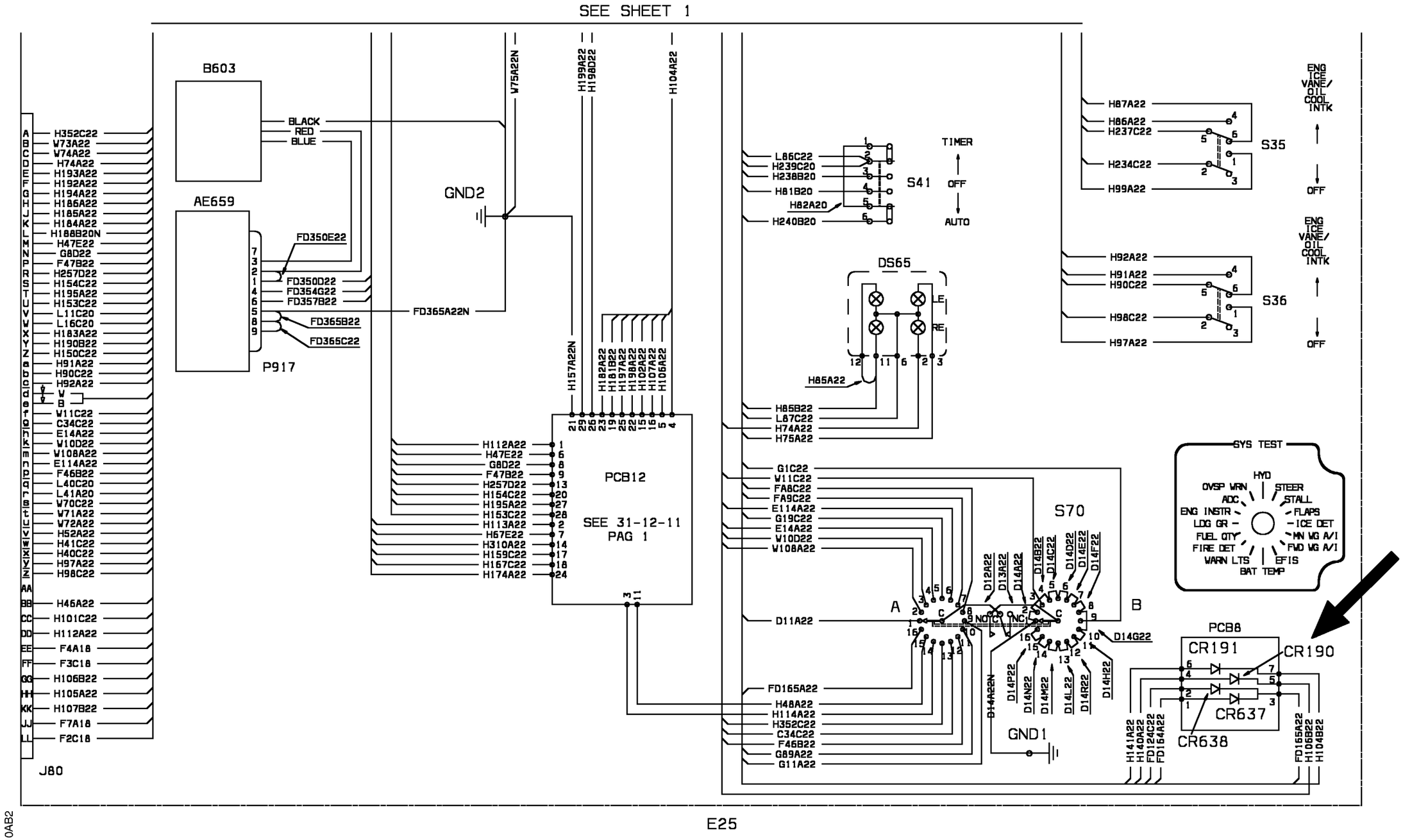


E25

WM_311210AB2

E25

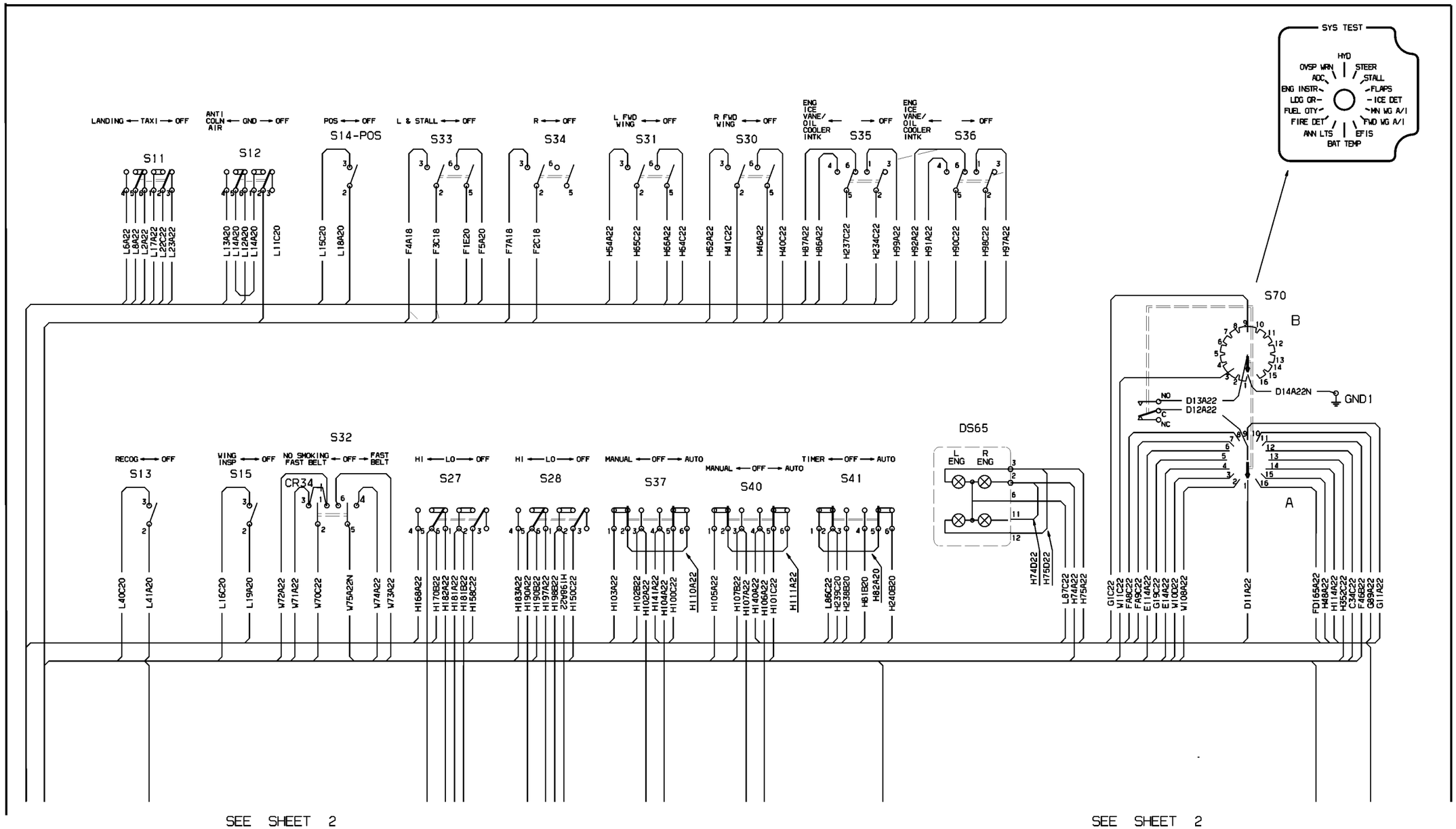


SEE SHEET 2

SEE SHEET 2

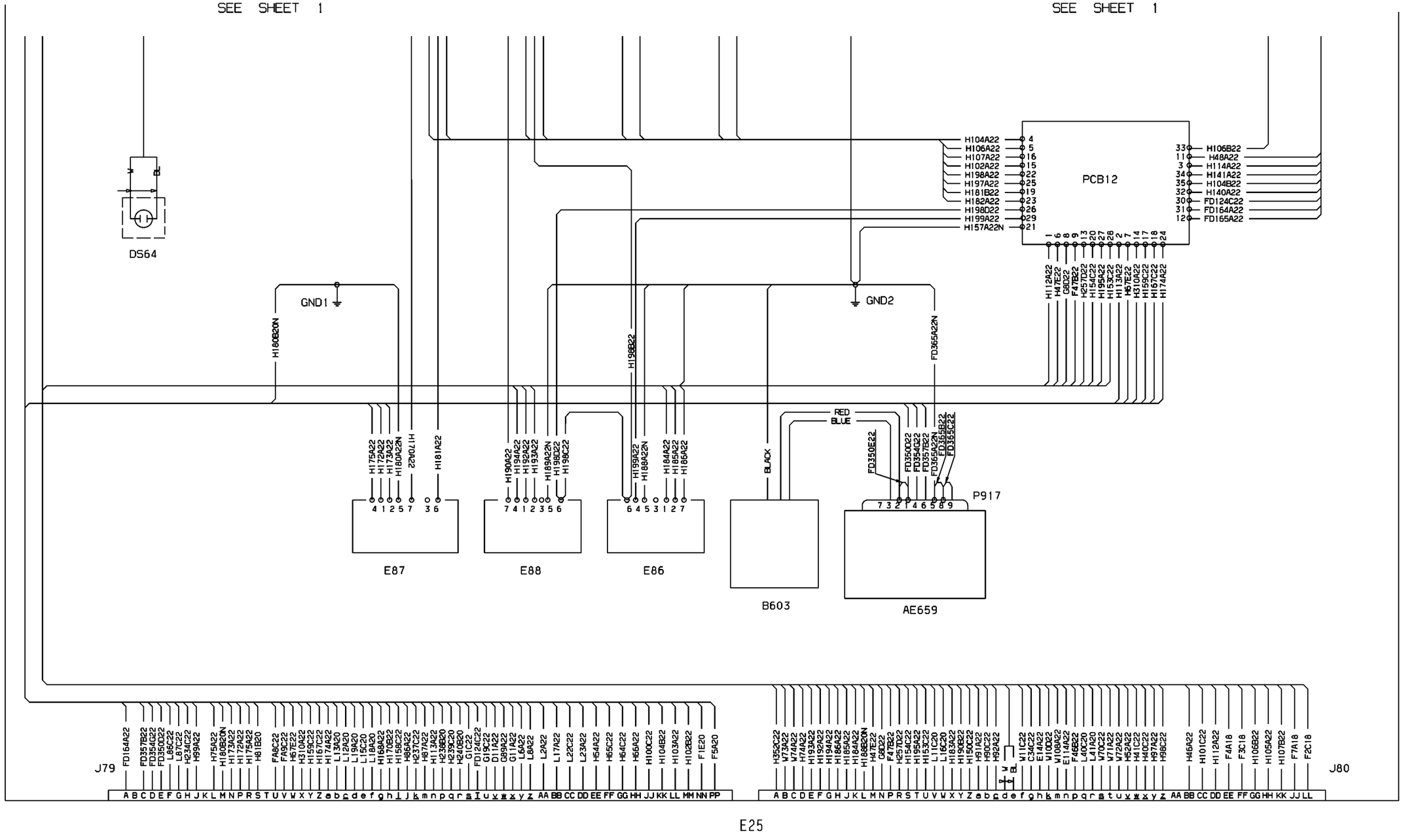


WM_311210_P2_S2

80-118321_1/D

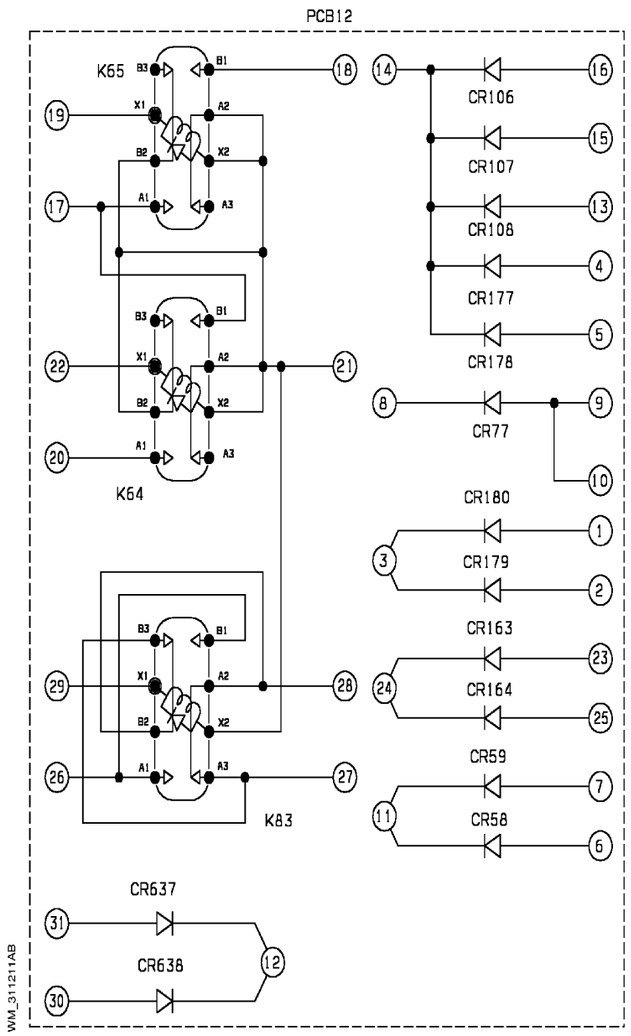


EFFECTIVITY : 1004 - 1015

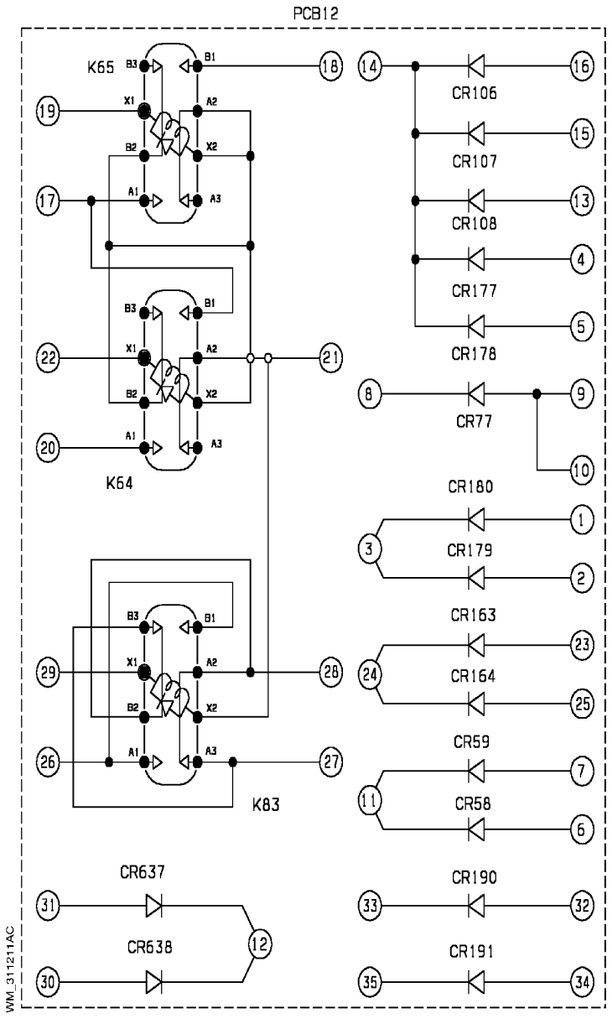


EFFECTIVITY : 1016 - 1104

WM_311331_P1_S1_UNCNE

| EFFECTIVITY: | INSTRUMENT & CONTROL PANELS<br>Pilot Switch Panel (PCB12) |
|---|---|

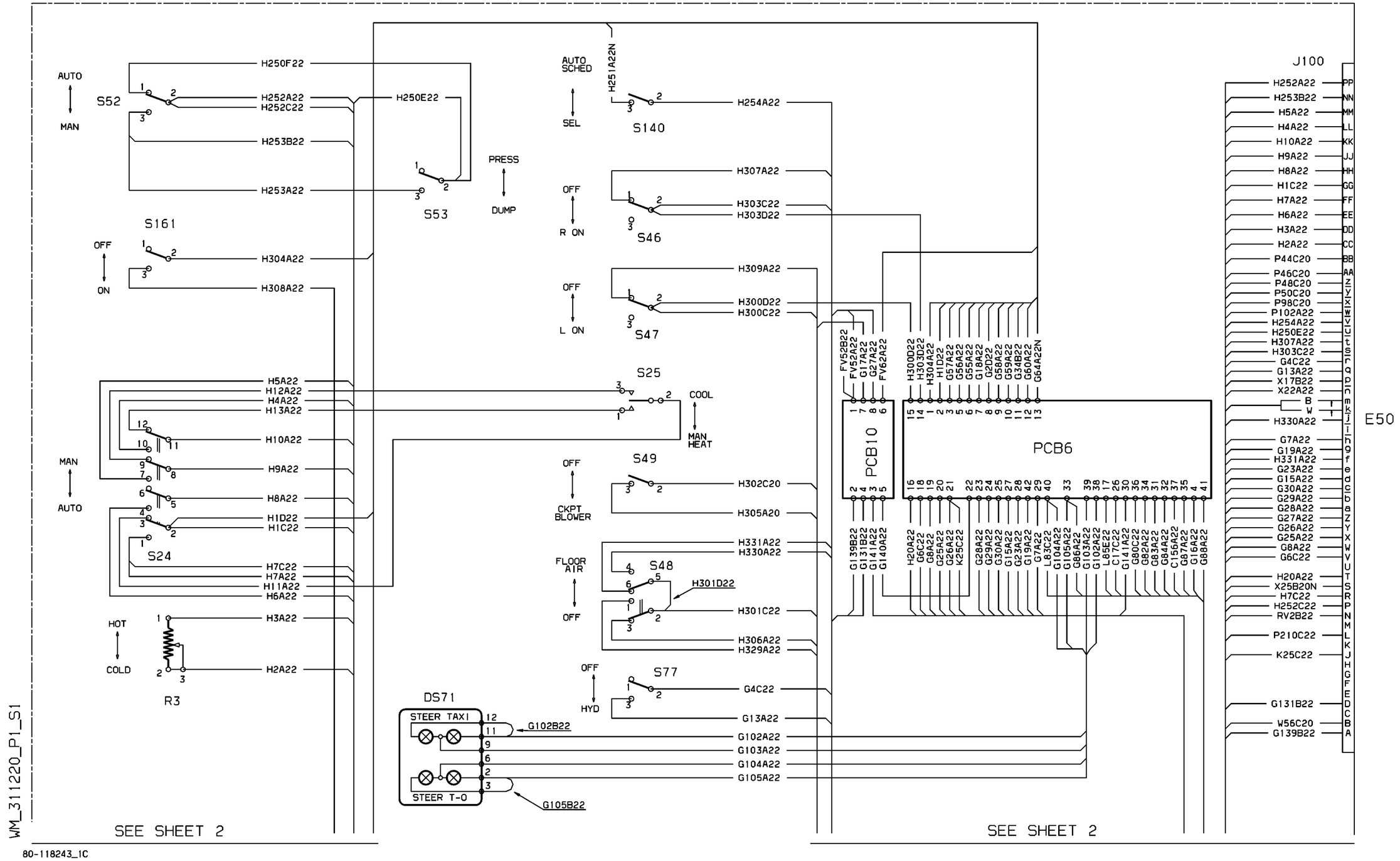
AUTO
MAN
S52
H250F22
H252A22
H252C22
H253B22
H253A22
H250E22
S53
PRESS
DUMP
AUTO SCHED
SEL
H251A22N
S140
H254A22
OFF
R ON
S46
H307A22
H303C22
H303D22
OFF
L ON
S47
H309A22
H300D22
H300C22
S161
OFF
ON
H304A22
H308A22
S25
COOL
MAN HEAT
H5A22
H12A22
H4A22
H13A22
H10A22
H9A22
H8A22
H1D22
H1C22
S24
MAN
AUTO
S49
OFF
CKPT BLOWER
H302C20
H305A20
H331A22
H330A22
FLOOR AIR
OFF
S48
H301D22
H301C22
H306A22
H329A22
H7C22
H7A22
H11A22
H6A22
H3A22
H2A22
HOT
COLD
R3
OFF
HYD
S77
G4C22
G13A22
DS71
STEER TAXI
STEER T-O
G102B22
G105B22
G102A22
G103A22
G104A22
G105A22
FV52B22
FV52A22
G17A22
G27A22
FV62A22
H300D22
H303D22
H304A22
H1D22
G57A22
G56A22
G55A22
G18A22
G2D22
G58A22
G59A22
G34B22
G60A22
G64A22N
PCB10
PCB6
G139B22
G131B22
G141A22
G140A22
H20A22
G6C22
G8A22
G25A22
G26A22
K25C22
G28A22
G29A22
G30A22
G23A22
G15A22
G19A22
G7A22
L83C22
G104A22
G105A22
G86A22
G103A22
G102A22
L85E22
C17C22
G141A22
G80C22
G82A22
G83A22
G84A22
C156A22
G87A22
G16A22
G88A22
J100
H252A22
H253B22
H5A22
H4A22
H10A22
H9A22
H8A22
H1C22
H7A22
H6A22
H3A22
H2A22
P44C20
P46C20
P48C20
P50C20
P98C20
P102A22
H254A22
H250E22
H307A22
H303C22
G4C22
G13A22
X17B22
X22A22
B
W
H330A22
G7A22
G19A22
H331A22
G23A22
G15A22
G30A22
G29A22
G28A22
G27A22
G26A22
G25A22
G8A22
G6C22
H20A22
X25B20N
H7C22
H252C22
RV2B22
P210C22
K25C22
G131B22
W56C20
G139B22
E50
SEE SHEET 2
SEE SHEET 2
WM_311220_P1_S1
80-118243_1C

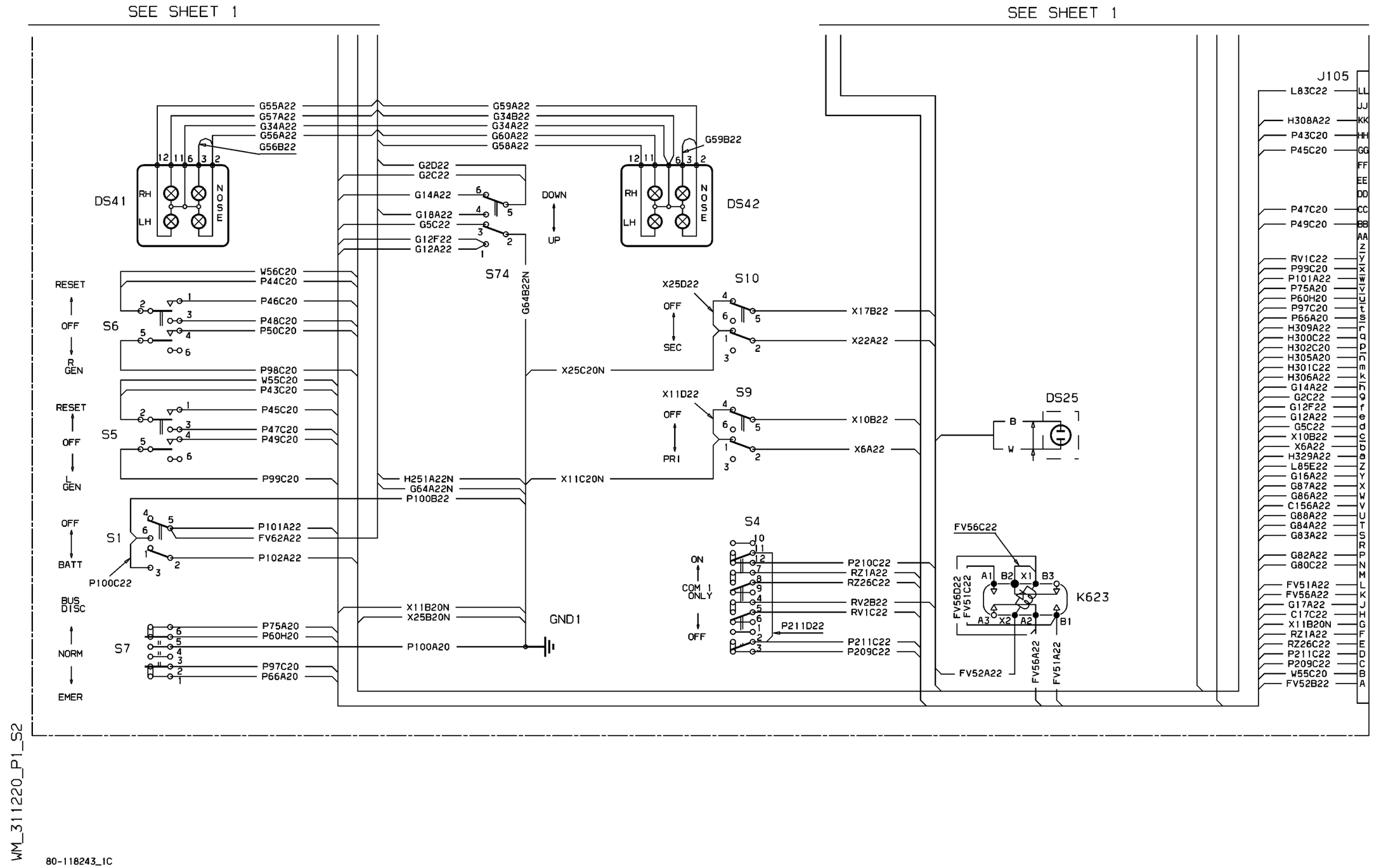


WM_311220_P1_S2

80-118243_IC

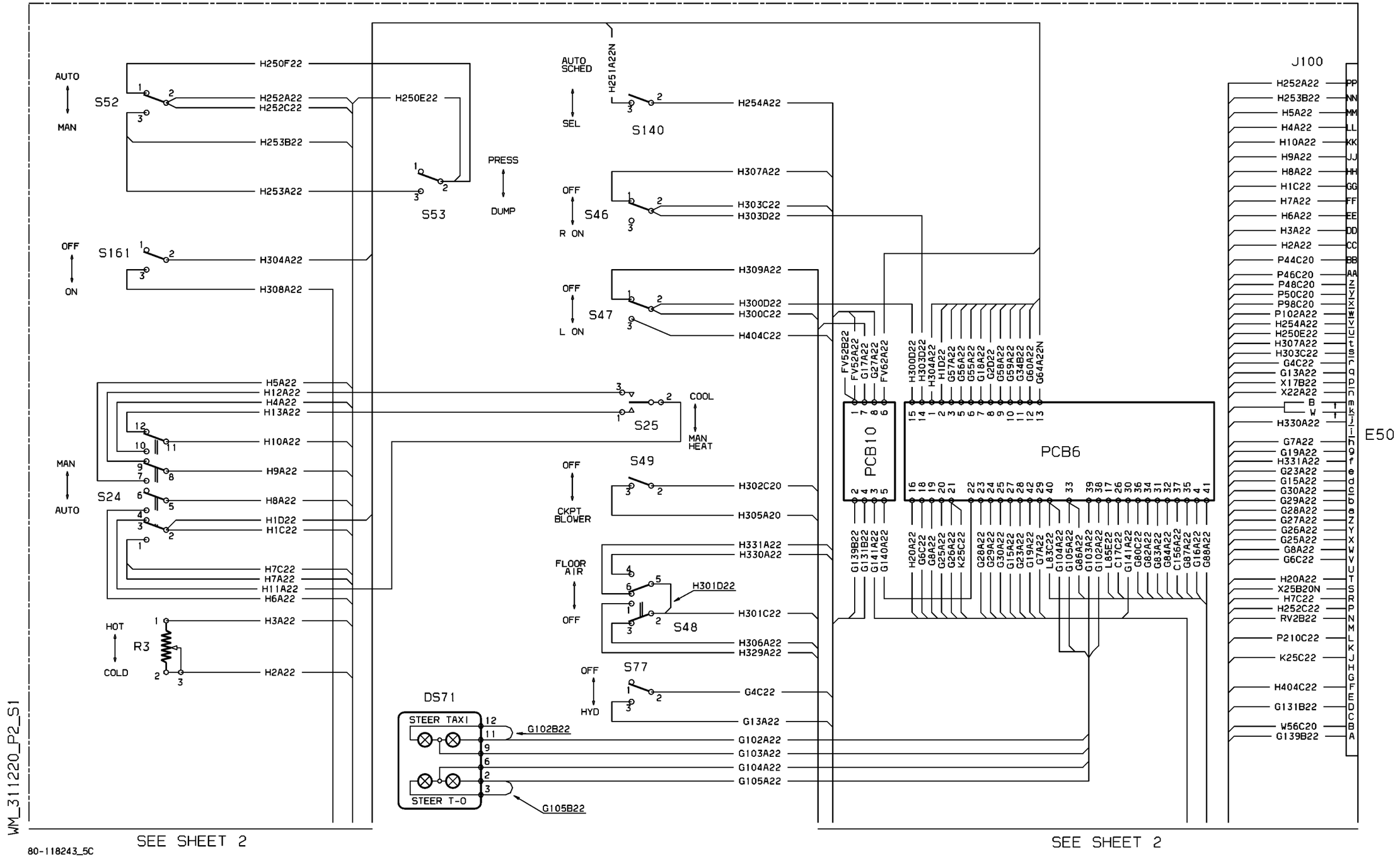
AUTO
MAN
S52
H250F22
H252A22
H252C22
H253B22
H253A22
H250E22
S53
PRESS
DUMP
AUTO SCHED
SEL
H251A22N
S140
H254A22
OFF
ON
S161
H304A22
H308A22
OFF
R ON
S46
H307A22
H303C22
H303D22
OFF
L ON
S47
H309A22
H300D22
H300C22
H404C22
H5A22
H12A22
H4A22
H13A22
H10A22
H9A22
H8A22
H1D22
H1C22
H7C22
H7A22
H11A22
H6A22
S25
COOL
MAN HEAT
MAN
AUTO
S24
HOT
COLD
R3
H3A22
H2A22
OFF
CKPT BLOWER
S49
H302C20
H305A20
FLOOR AIR
OFF
H331A22
H330A22
H301D22
H301C22
S48
H306A22
H329A22
OFF
HYD
S77
G4C22
G13A22
DS71
STEER TAXI
STEER T-O
G102B22
G105B22
G102A22
G103A22
G104A22
G105A22
FV52B22
FV52A22
G17A22
G27A22
FV62A22
H300D22
H303D22
H304A22
H1D22
G57A22
G56A22
G55A22
G55A22
G18A22
G2D22
G58A22
G59A22
G34B22
G60A22
G64A22N
PCB10
PCB6
G139B22
G131B22
G141A22
G140A22
H20A22
G6C22
G8A22
G25A22
G26A22
K25C22
G28A22
G29A22
G30A22
G15A22
G23A22
G19A22
G7A22
L83C22
G104A22
G105A22
G86A22
G103A22
G102A22
L85E22
C17C22
G141A22
G80C22
G82A22
G83A22
G84A22
C156A22
G87A22
G16A22
G88A22
J100
H252A22
H253B22
H5A22
H4A22
H10A22
H9A22
H8A22
H1C22
H7A22
H6A22
H3A22
H2A22
P44C20
P46C20
P48C20
P50C20
P98C20
P102A22
H254A22
H250E22
H307A22
H303C22
G4C22
G13A22
X17B22
X22A22
B
W
H330A22
G7A22
G19A22
H331A22
G23A22
G15A22
G30A22
G29A22
G28A22
G27A22
G26A22
G25A22
G8A22
G6C22
H20A22
X25B20N
H7C22
H252C22
RV2B22
P210C22
K25C22
H404C22
G131B22
W56C20
G139B22
E50
WM_311220_P2_S1
SEE SHEET 2
SEE SHEET 2
80-118243_5C

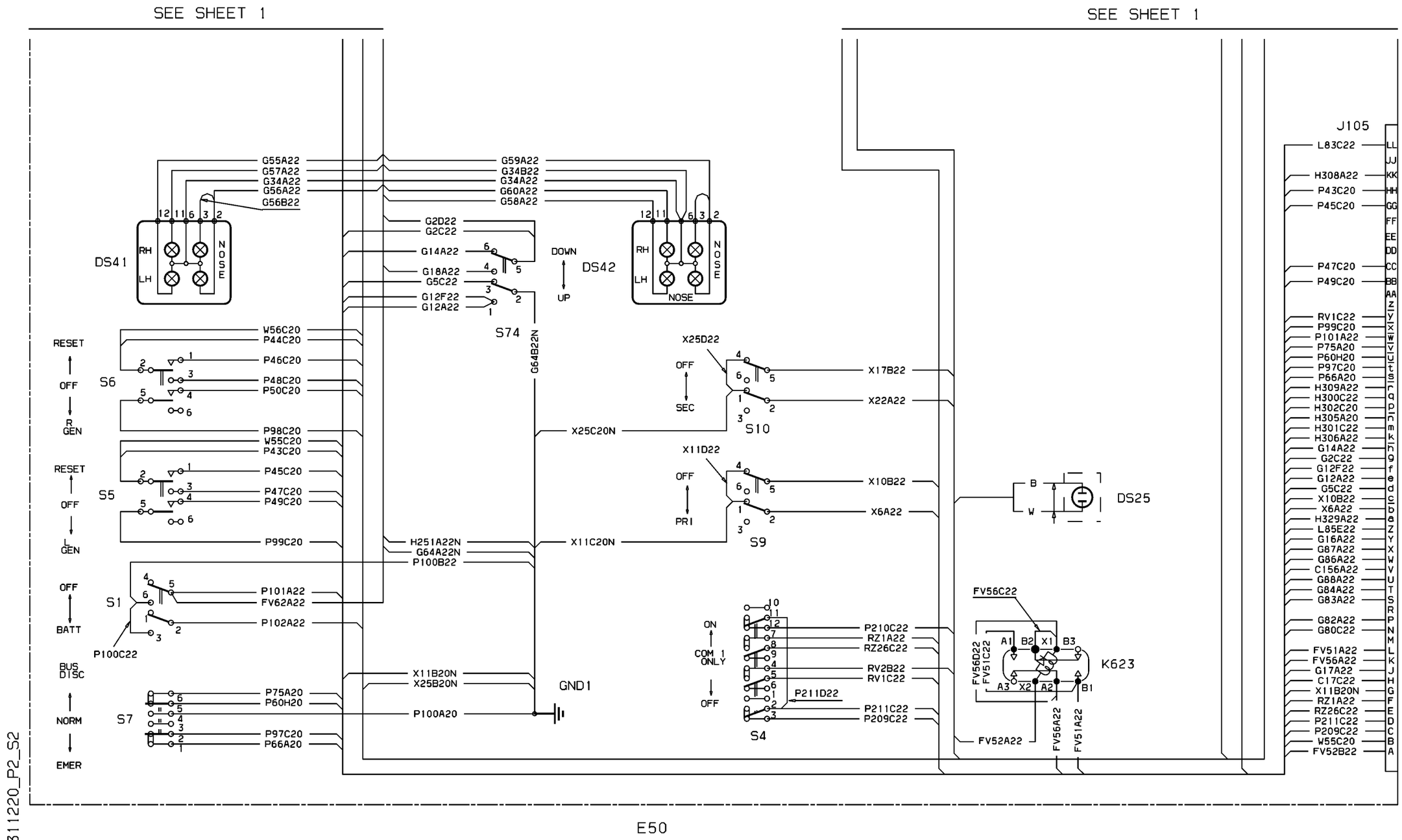


E50

WM_311220_P2_S2

80-118243_5C

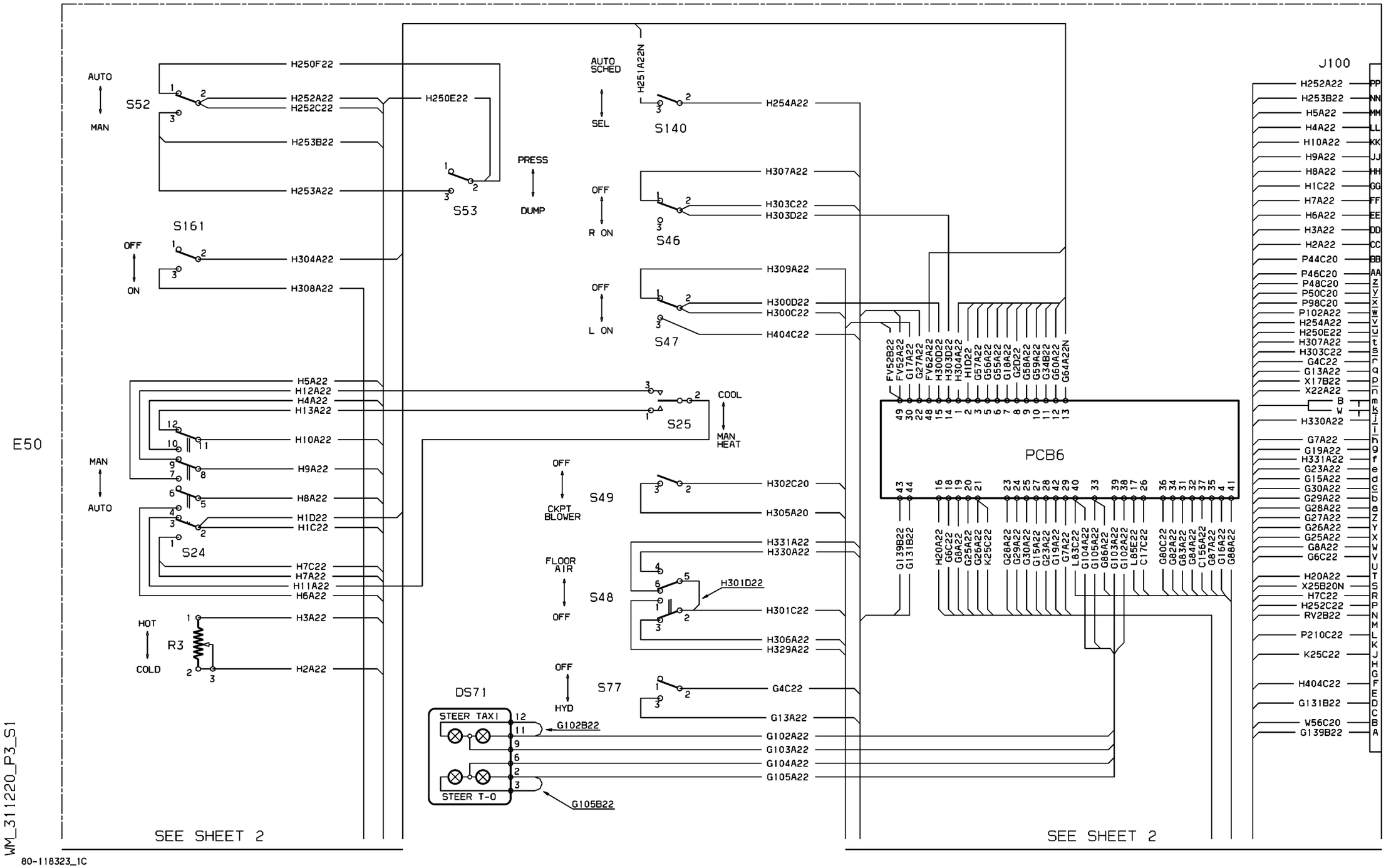
E50
AUTO
MAN
S52
H250F22
H252A22
H252C22
H253B22
H253A22
H250E22
S53
PRESS
DUMP
AUTO SCHED
SEL
H251A22N
S140
H254A22
OFF
R ON
S46
H307A22
H303C22
H303D22
OFF
L ON
S47
H309A22
H300D22
H300C22
H404C22
S161
OFF
ON
H304A22
H308A22
H5A22
H12A22
H4A22
H13A22
S25
COOL
MAN HEAT
H10A22
H9A22
H8A22
H1D22
H1C22
S24
MAN
AUTO
H7C22
H7A22
H11A22
H6A22
HOT
COLD
R3
H3A22
H2A22
OFF
CKPT BLOWER
S49
H302C20
H305A20
FLOOR AIR
S48
H331A22
H330A22
H301D22
H301C22
H306A22
H329A22
OFF
HYD
S77
G4C22
G13A22
DS71
STEER TAXI
STEER T-O
G102B22
G105B22
G102A22
G103A22
G104A22
G105A22
FV52B22
FV52A22
G17A22
G27A22
FV62A22
H300D22
H303D22
H304A22
H1D22
G57A22
G56A22
G55A22
G18A22
G2D22
G58A22
G59A22
G34B22
G60A22
G64A22N
PCB6
G139B22
G131B22
H20A22
G6C22
G8A22
G25A22
G26A22
K25C22
G28A22
G29A22
G30A22
G15A22
G23A22
G19A22
G7A22
L83C22
G104A22
G105A22
G86A22
G103A22
G102A22
L85E22
C17C22
G80C22
G82A22
G83A22
G84A22
C156A22
G87A22
G16A22
G88A22
J100
H252A22
H253B22
H5A22
H4A22
H10A22
H9A22
H8A22
H1C22
H7A22
H6A22
H3A22
H2A22
P44C20
P46C20
P48C20
P50C20
P98C20
P102A22
H254A22
H250E22
H307A22
H303C22
G4C22
G13A22
X17B22
X22A22
B
W
H330A22
G7A22
G19A22
H331A22
G23A22
G15A22
G30A22
G29A22
G28A22
G27A22
G26A22
G25A22
G8A22
G6C22
H20A22
X25B20N
H7C22
H252C22
RV2B22
P210C22
K25C22
H404C22
G131B22
W56C20
G139B22
SEE SHEET 2
SEE SHEET 2
WM_311220_P3_S1
80-118323_1C

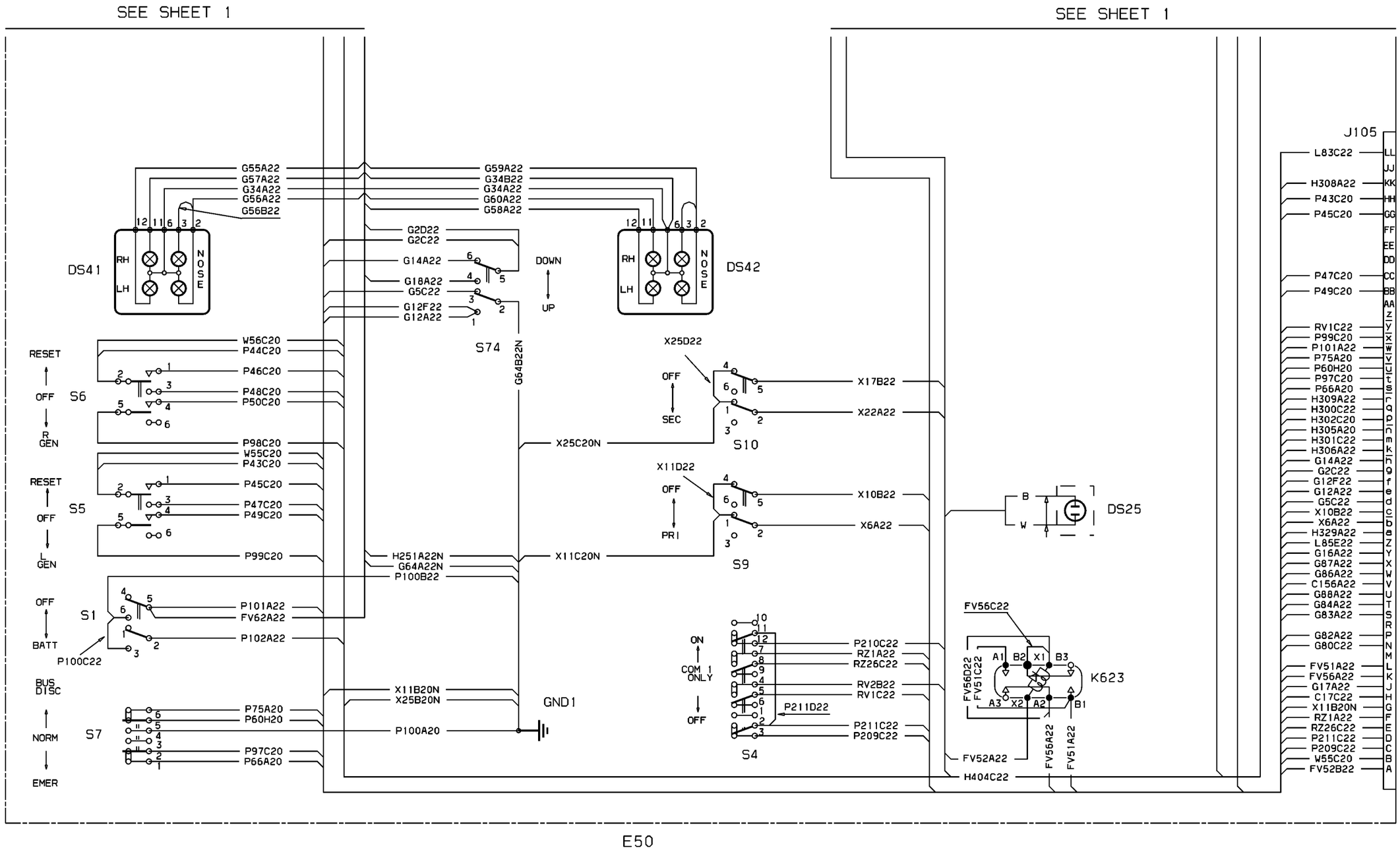
SEE SHEET 1
SEE SHEET 1
DS41
DS42
RH
LH
NOSE
G55A22
G57A22
G34A22
G56A22
G56B22
G59A22
G34B22
G34A22
G60A22
G58A22
G2D22
G2C22
G14A22
G18A22
G5C22
G12F22
G12A22
DOWN
UP
S74
G64B22N
S6
RESET
OFF
R GEN
W56C20
P44C20
P46C20
P48C20
P50C20
S5
L GEN
P98C20
W55C20
P43C20
P45C20
P47C20
P49C20
P99C20
S1
BATT
P100C22
P101A22
FV62A22
P102A22
BUS DISC
NORM
EMER
S7
P75A20
P60H20
P97C20
P66A20
P100A20
H251A22N
G64A22N
P100B22
X11B20N
X25B20N
GND1
X11C20N
X25C20N
X25D22
X17B22
X22A22
S10
X11D22
X10B22
X6A22
S9
ON
COM 1 ONLY
P210C22
RZ1A22
RZ26C22
RV2B22
RV1C22
P211D22
P211C22
P209C22
S4
B
W
DS25
FV56C22
FV56D22
FV51C22
A1
B2
X1
B3
A3
X2
A2
B1
K623
FV52A22
H404C22
FV56A22
FV51A22
J105
L83C22
H308A22
P43C20
P45C20
P47C20
P49C20
RV1C22
P99C20
P101A22
P75A20
P60H20
P97C20
P66A20
H309A22
H300C22
H302C20
H305A20
H301C22
H306A22
G14A22
G2C22
G12F22
G12A22
G5C22
X10B22
X6A22
H329A22
L85E22
G16A22
G87A22
G86A22
C156A22
G88A22
G84A22
G83A22
G82A22
G80C22
FV51A22
FV56A22
G17A22
C17C22
X11B20N
RZ1A22
RZ26C22
P211C22
P209C22
W55C20
FV52B22
E50
WM_311220_P3_S2
80-118323_1C

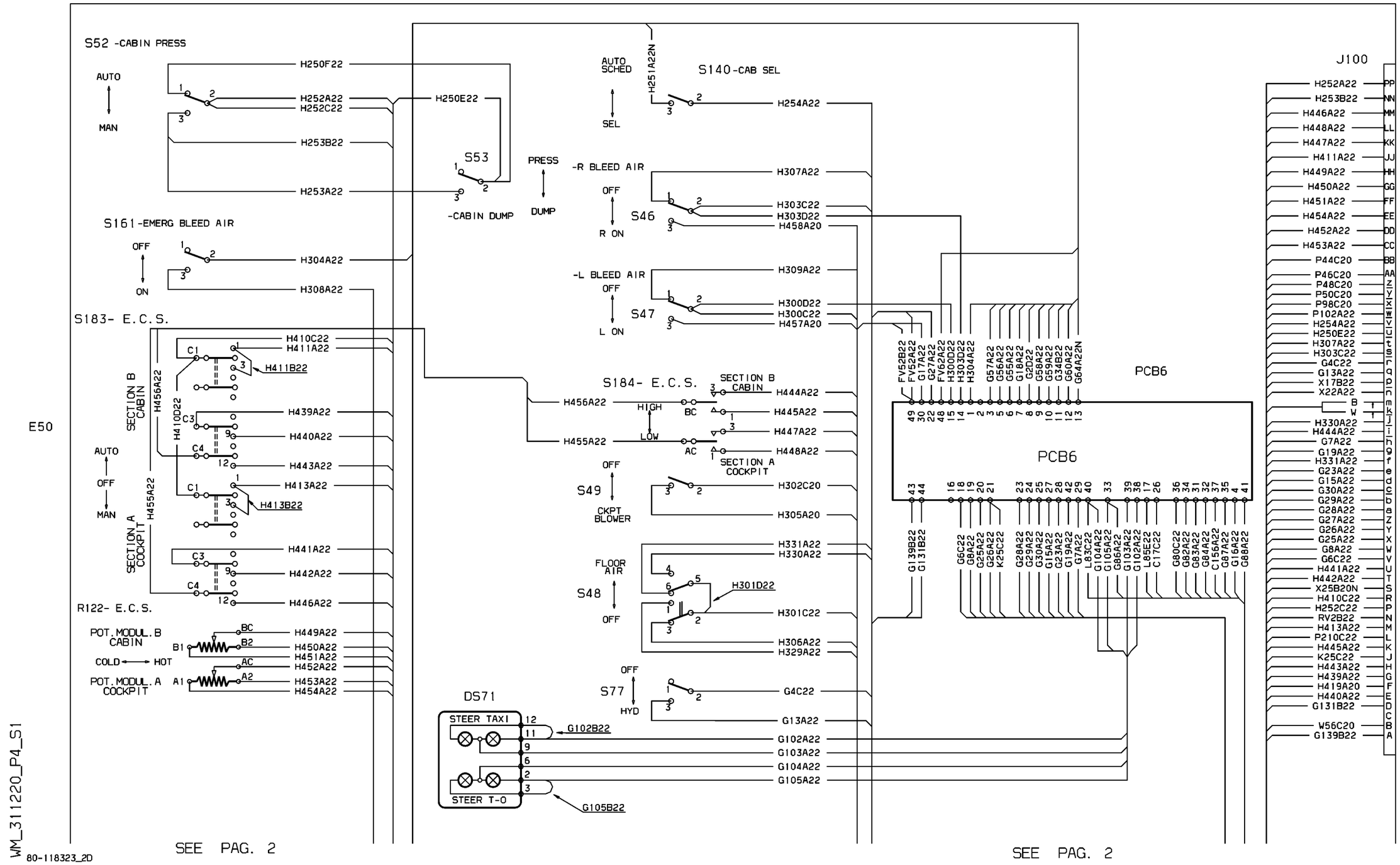
S52 -CABIN PRESS
AUTO
MAN
H250F22
H252A22
H252C22
H253B22
H253A22
H250E22
S53
PRESS
DUMP
-CABIN DUMP
S161-EMERG BLEED AIR
OFF
ON
H304A22
H308A22
S183- E.C.S.
H410C22
H411A22
H411B22
H439A22
H440A22
H443A22
H413A22
H413B22
H441A22
H442A22
H446A22
H456A22
H410D22
H455A22
SECTION B CABIN
SECTION A COCKPIT
R122- E.C.S.
POT.MODUL.B CABIN
POT.MODUL.A COCKPIT
COLD
HOT
H449A22
H450A22
H451A22
H452A22
H453A22
H454A22
H251A22N
AUTO SCHED
SEL
S140-CAB SEL
H254A22
-R BLEED AIR
OFF
R ON
S46
H307A22
H303C22
H303D22
H458A20
-L BLEED AIR
L ON
S47
H309A22
H300D22
H300C22
H457A20
S184- E.C.S.
HIGH
LOW
BC
AC
H444A22
H445A22
H447A22
H448A22
S49
CKPT BLOWER
H302C20
H305A20
FLOOR AIR
S48
H331A22
H330A22
H301D22
H301C22
H306A22
H329A22
S77
HYD
G4C22
G13A22
DS71
STEER TAXI
STEER T-O
G102B22
G105B22
G102A22
G103A22
G104A22
G105A22
FV52B22
FV52A22
G17A22
G27A22
FV62A22
H300D22
H303D22
H304A22
G57A22
G56A22
G55A22
G18A22
G2D22
G58A22
G59A22
G34B22
G60A22
G64A22N
PCB6
G139B22
G131B22
G6C22
G8A22
G25A22
G26A22
K25C22
G28A22
G29A22
G30A22
G15A22
G23A22
G19A22
G7A22
L83C22
G104A22
G105A22
G86A22
G103A22
G102A22
L85E22
C17C22
G80C22
G82A22
G83A22
G84A22
C156A22
G87A22
G16A22
G88A22
J100
H252A22
H253B22
H446A22
H448A22
H447A22
H411A22
H449A22
H450A22
H451A22
H454A22
H452A22
H453A22
P44C20
P46C20
P48C20
P50C20
P98C20
P102A22
H254A22
H250E22
H307A22
H303C22
G4C22
G13A22
X17B22
X22A22
H330A22
H444A22
G7A22
G19A22
H331A22
G23A22
G15A22
G30A22
G29A22
G28A22
G27A22
G26A22
G25A22
G8A22
G6C22
H441A22
H442A22
X25B20N
H410C22
H252C22
RV2B22
H413A22
P210C22
H445A22
K25C22
H443A22
H439A22
H419A20
H440A22
G131B22
W56C20
G139B22
E50
WM_311220_P4_S1
80-118323_2D
SEE PAG. 2
SEE PAG. 2

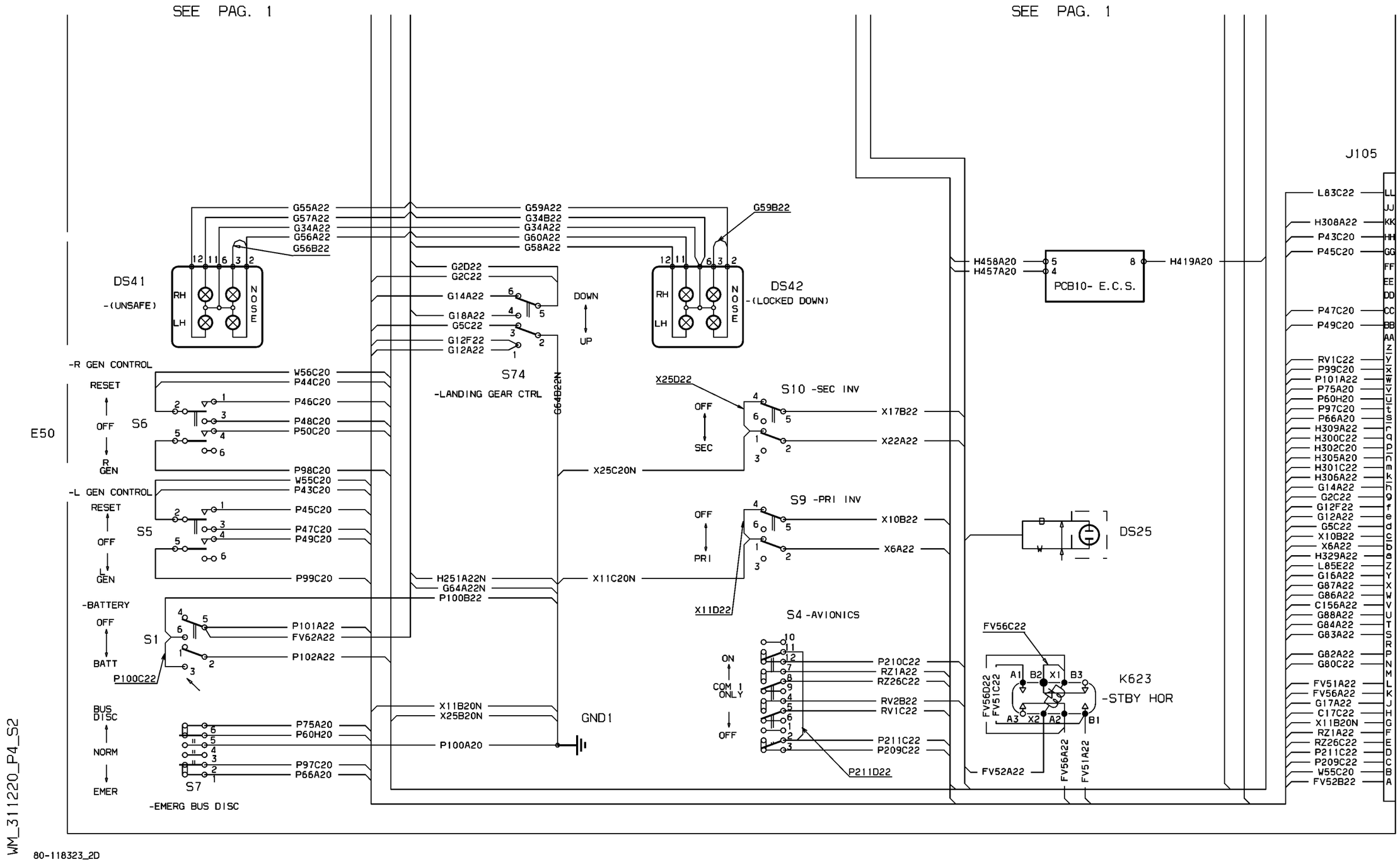


| | |
|---|---|
| EFFECTIVITY:<br>1041,1042,1044,<br>1046-1049,1052,1053,<br>1055,1056,1058-1078,<br>1082 | INSTRUMENT & CONTROL PANELS<br>Center Switch Panel, with E.C.S |

**31-12-20**

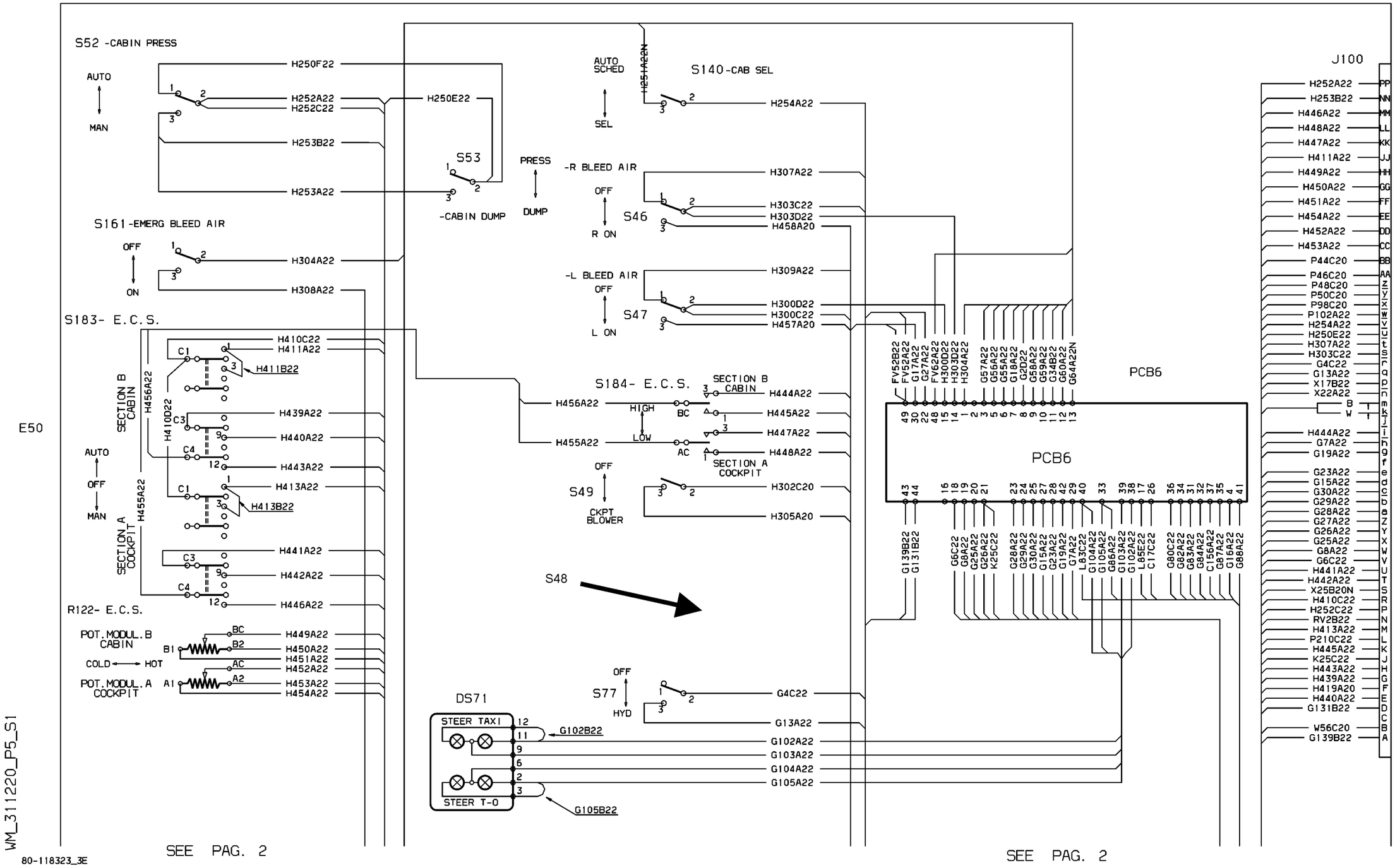


E50

| EFFECTIVITY: | INSTRUMENT & CONTROL PANELS |
|---|---|
| 1079-1081,1083, 1084,1086,1088,1089, 1091-1095,1097,1104 | Ctr Switch Pnl whitout FLoor diffus valve Switch |

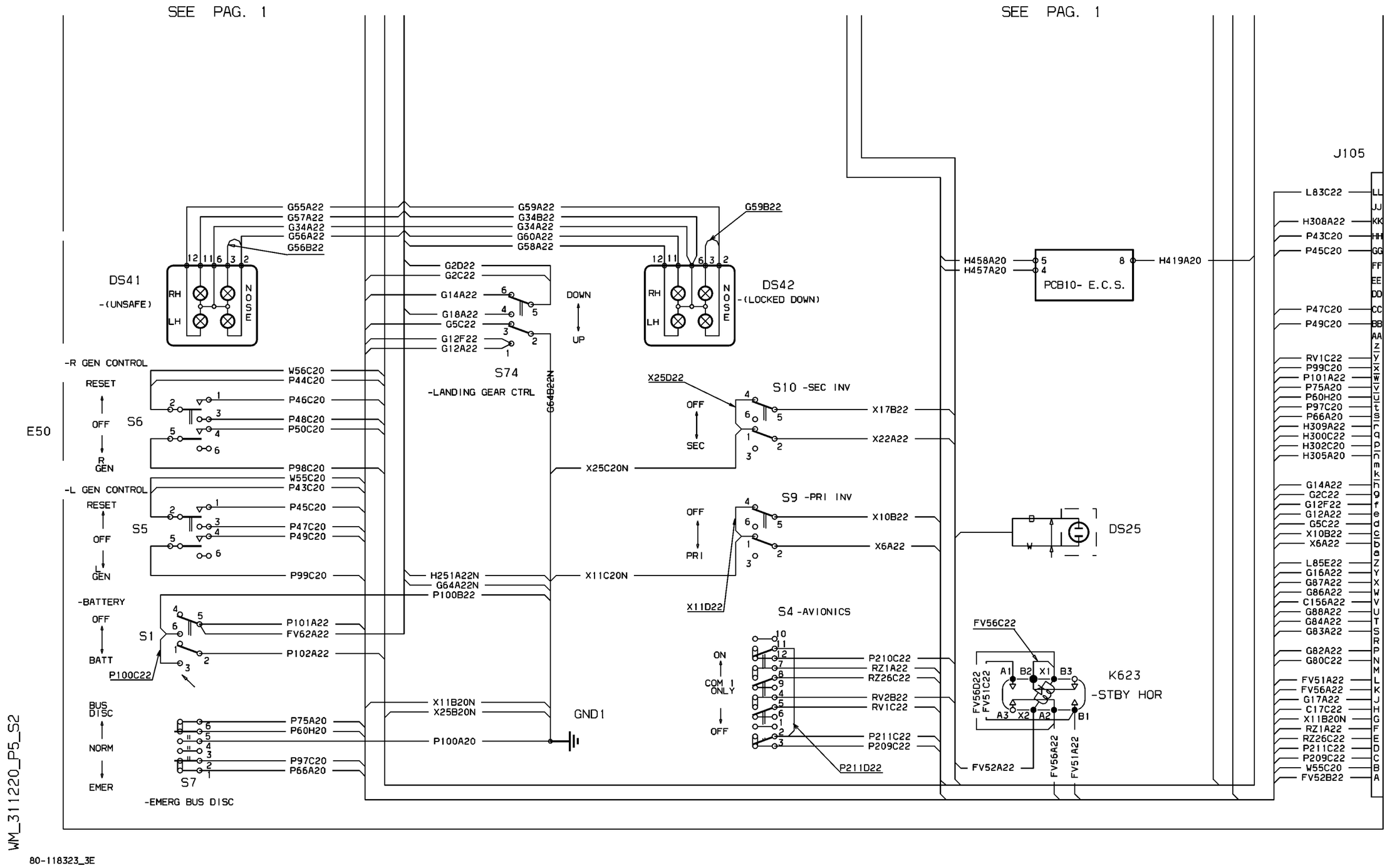
SEE PAG. 1
SEE PAG. 1
J105
DS41
-(UNSAFE)
DS42
-(LOCKED DOWN)
RH
LH
NOSE
G55A22
G57A22
G34A22
G56A22
G56B22
G59A22
G34B22
G34A22
G60A22
G58A22
G59B22
G2D22
G2C22
G14A22
G18A22
G5C22
G12F22
G12A22
DOWN
UP
S74
-LANDING GEAR CTRL
G64B22N
-R GEN CONTROL
RESET
OFF
R GEN
S6
E50
W56C20
P44C20
P46C20
P48C20
P50C20
P98C20
-L GEN CONTROL
W55C20
P43C20
P45C20
P47C20
P49C20
P99C20
S5
-BATTERY
OFF
BATT
S1
P100C22
P101A22
FV62A22
P102A22
BUS DISC
NORM
EMER
S7
-EMERG BUS DISC
P75A20
P60H20
P97C20
P66A20
H251A22N
G64A22N
P100B22
X11B20N
X25B20N
P100A20
GND1
X25D22
S10 -SEC INV
OFF
SEC
X17B22
X22A22
X25C20N
S9 -PRI INV
PRI
X10B22
X6A22
X11C20N
X11D22
S4 -AVIONICS
ON
COM 1 ONLY
OFF
P210C22
RZ1A22
RZ26C22
RV2B22
RV1C22
P211C22
P209C22
P211D22
H458A20
H457A20
PCB10- E.C.S.
H419A20
DS25
FV56C22
FV56D22
FV51C22
K623
-STBY HOR
FV52A22
FV56A22
FV51A22
L83C22
H308A22
P43C20
P45C20
P47C20
P49C20
RV1C22
P99C20
P101A22
P75A20
P60H20
P97C20
P66A20
H309A22
H300C22
H302C20
H305A20
G14A22
G2C22
G12F22
G12A22
G5C22
X10B22
X6A22
L85E22
G16A22
G87A22
G86A22
C156A22
G88A22
G84A22
G83A22
G82A22
G80C22
FV51A22
FV56A22
G17A22
C17C22
X11B20N
RZ1A22
RZ26C22
P211C22
P209C22
W55C20
FV52B22
WM_311220_P5_S2
80-118323_3E

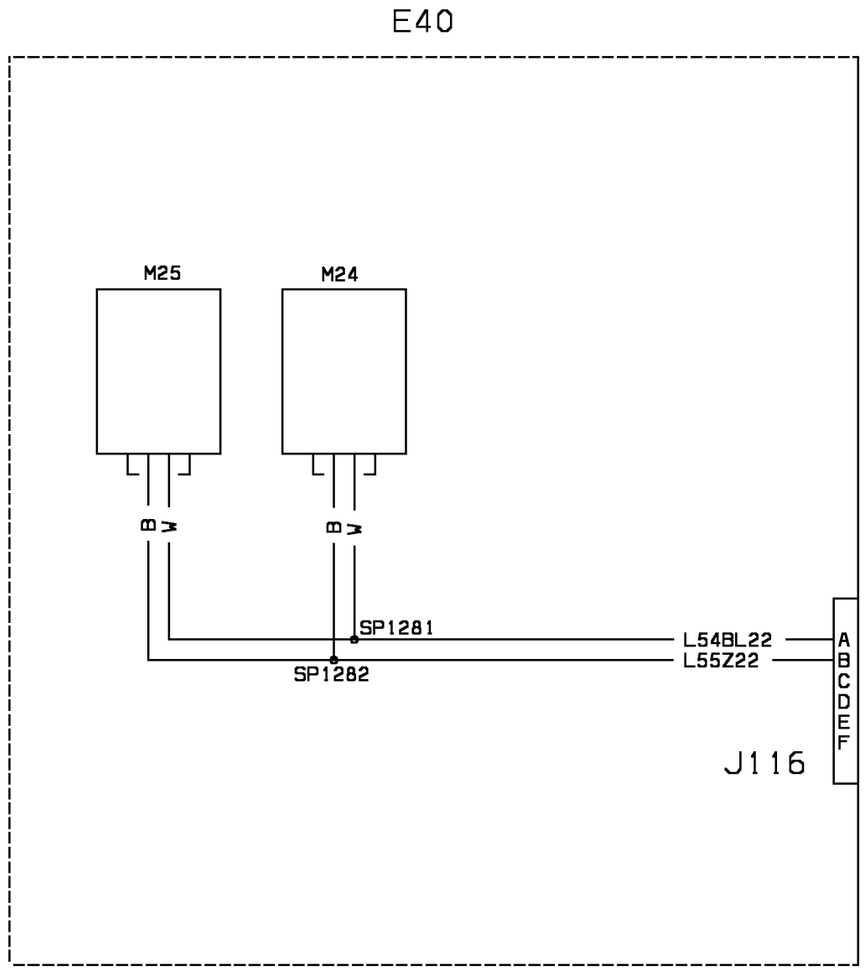


WM_311230AG

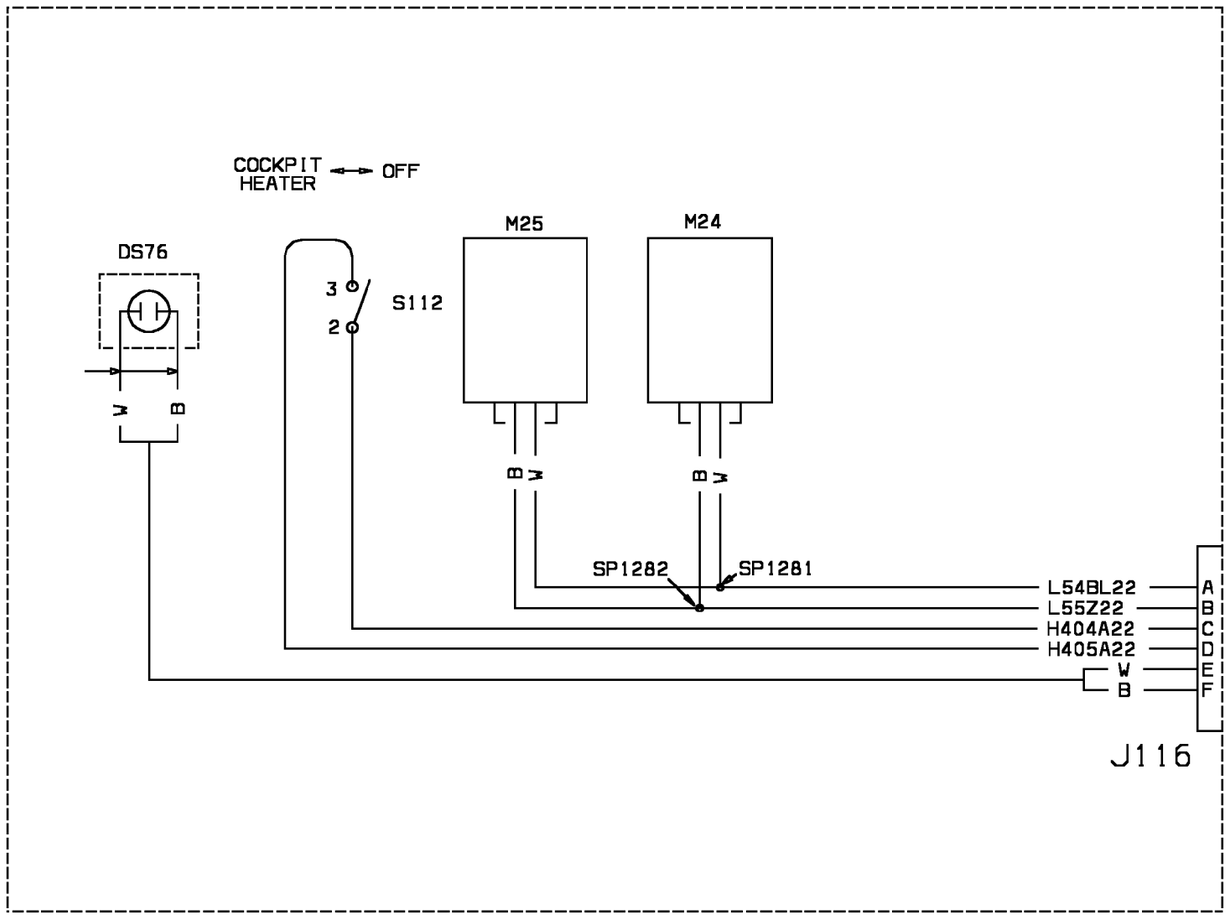


E40

WM_311230CF

E40

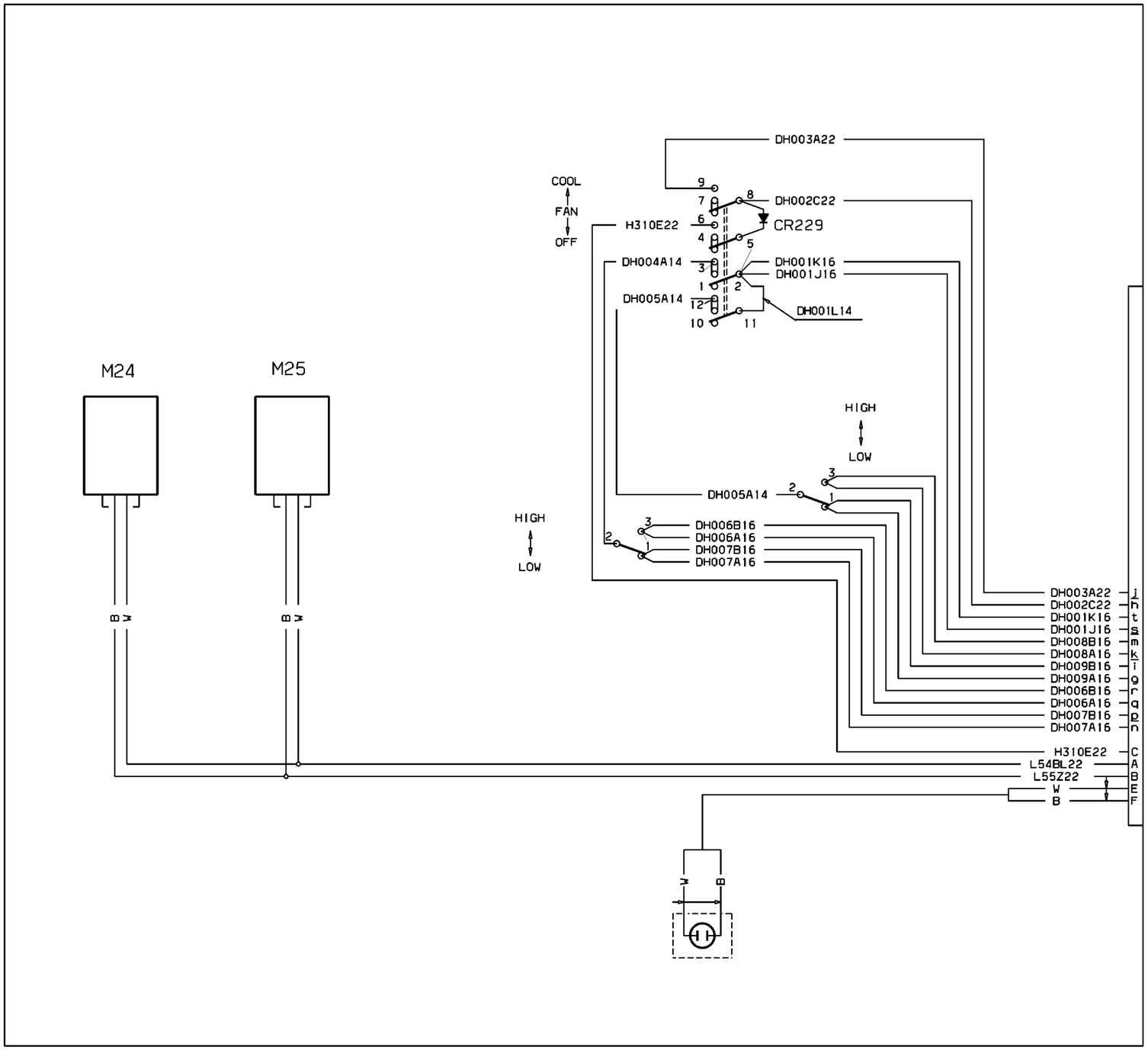


WM_311230CG

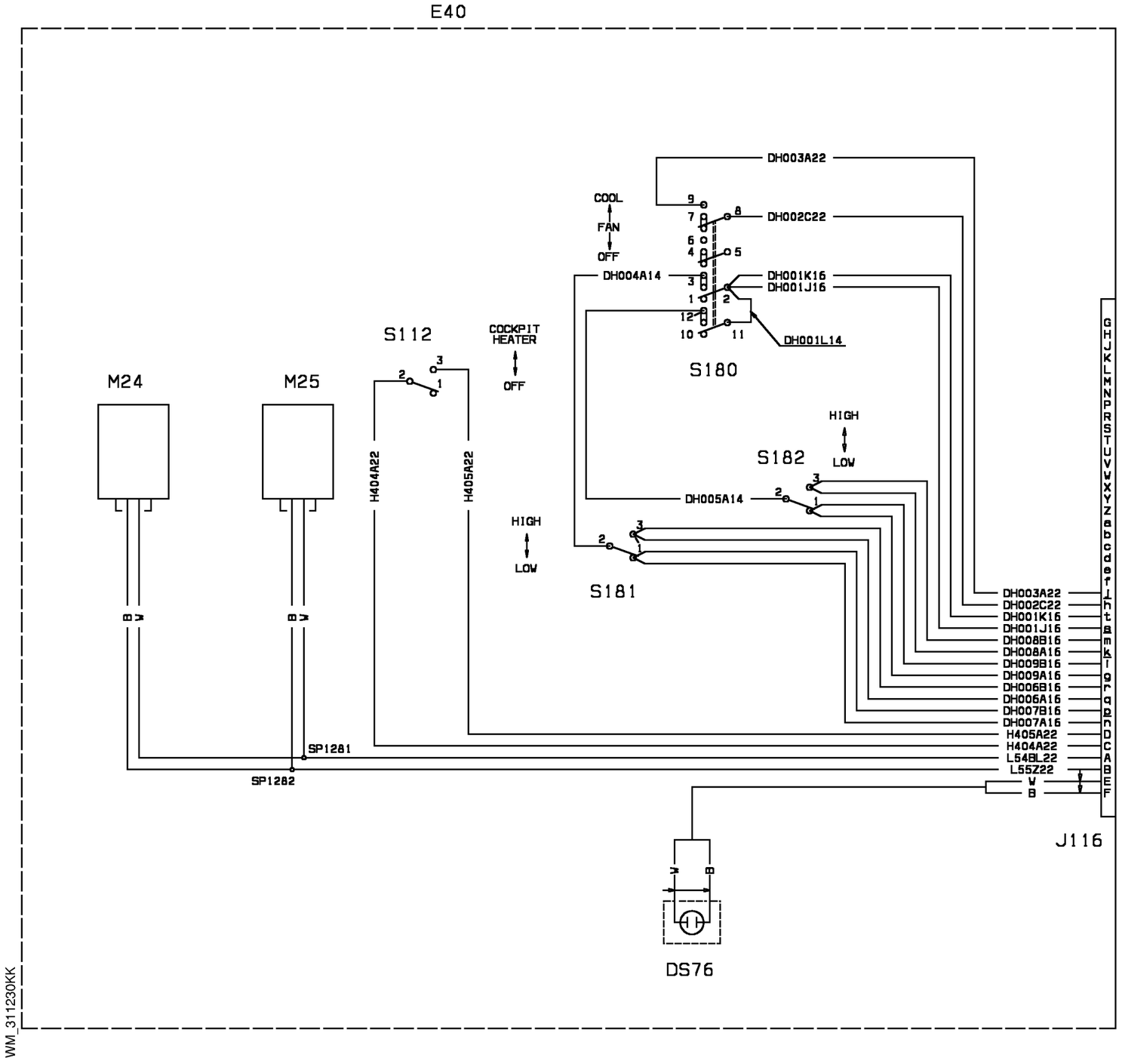
E40
M24
M25
S112
COCKPIT HEATER
OFF
H404A22
H405A22
HIGH
LOW
S181
S180
COOL
FAN
OFF
DH004A14
DH003A22
DH002C22
DH001K16
DH001J16
DH001L14
S182
HIGH
LOW
DH005A14
SP1281
SP1282
DS76
J116
DH003A22
DH002C22
DH001K16
DH001J16
DH008B16
DH008A16
DH009B16
DH009A16
DH006B16
DH006A16
DH007B16
DH007A16
H405A22
H404A22
L54BL22
L55Z22
W
B
WM_311230KK

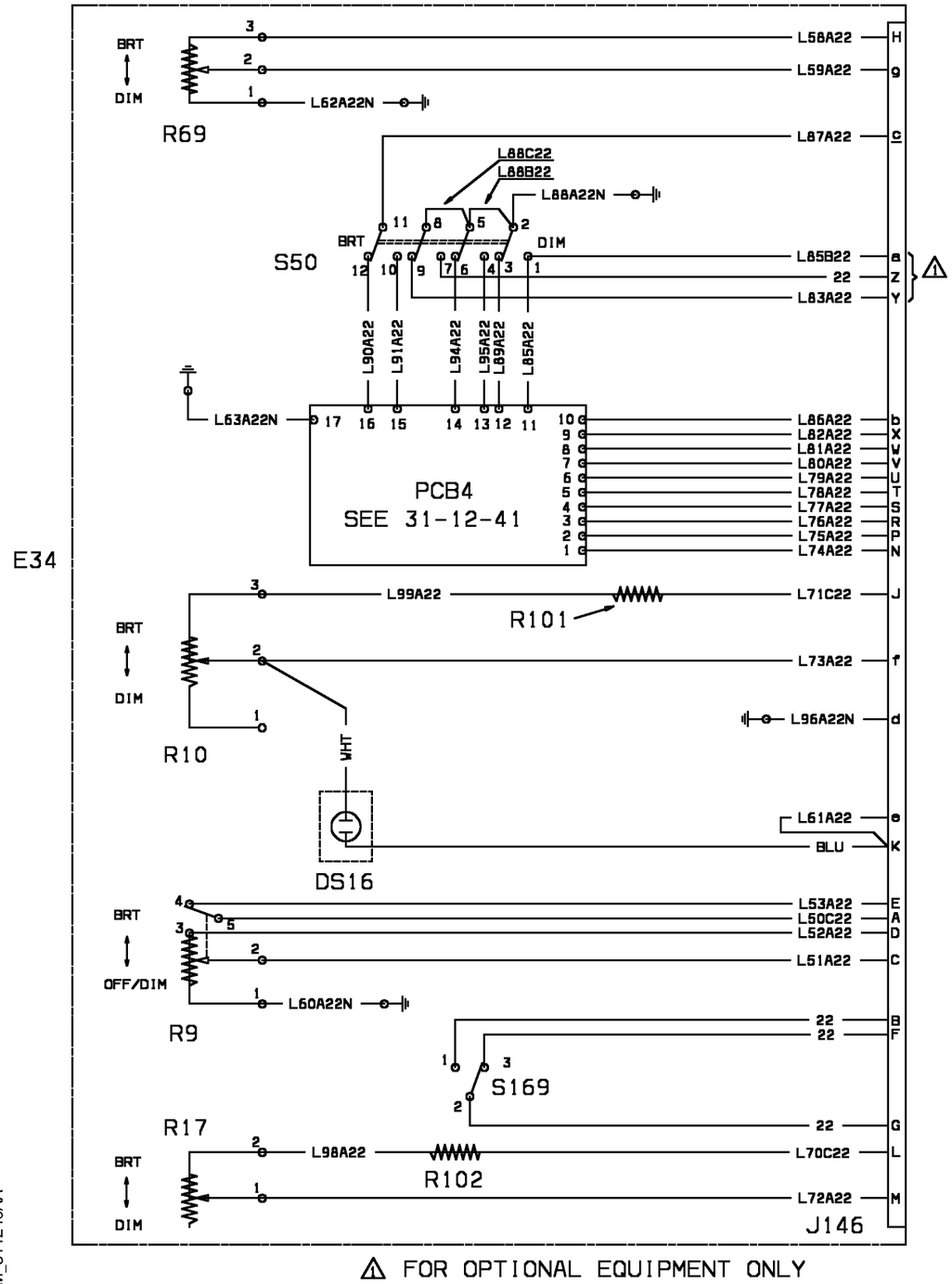


WM_311240AA

| EFFECTIVITY: | INSTRUMENT & CONTROL PANELS<br>Dimmer Control Panel |
|---|---|

**31-12-40**

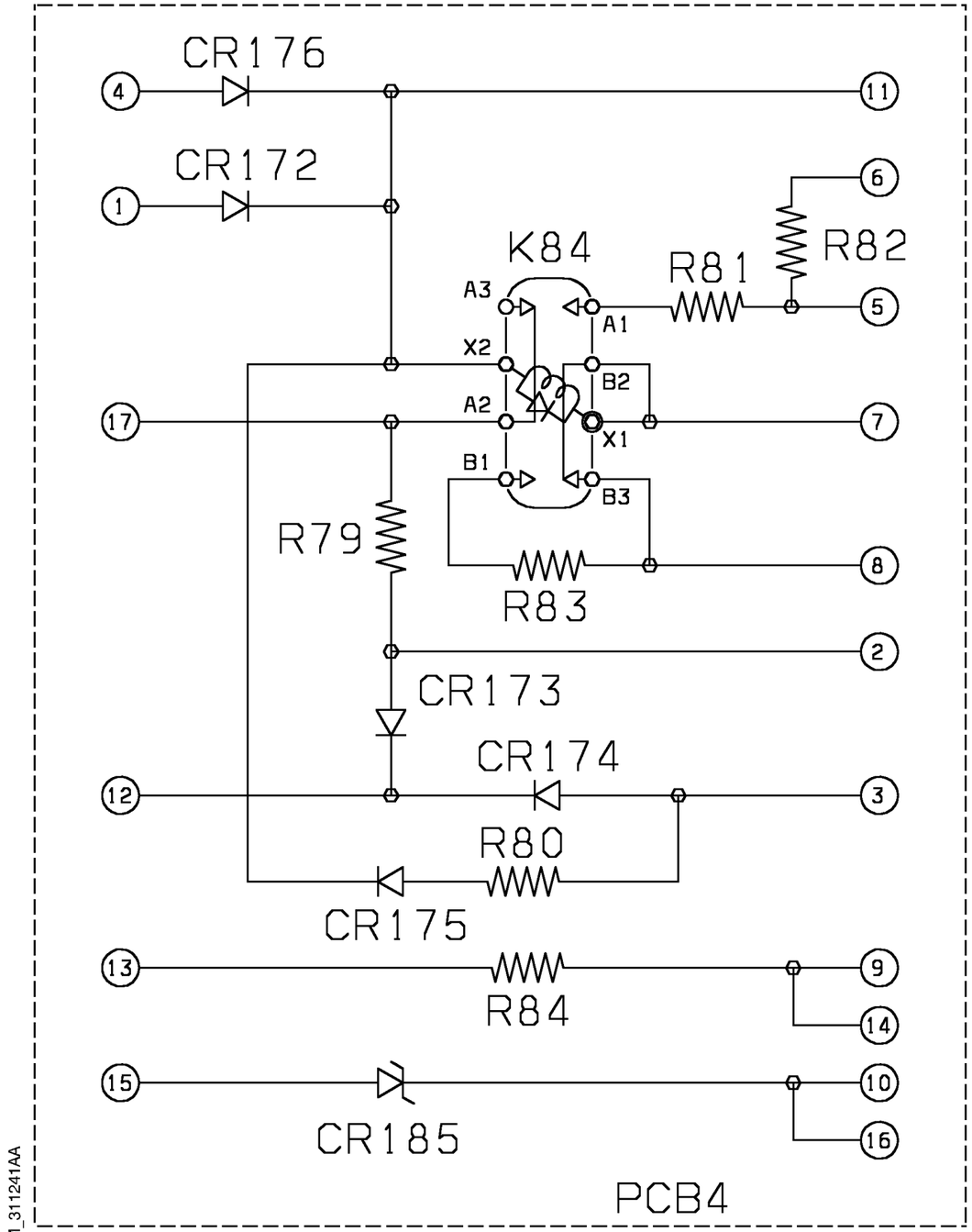


WM_311241AA

| EFFECTIVITY: | INSTRUMENT & CONTROL PANELS<br>Control Panel-dimmer (PCB4) |
|---|---|

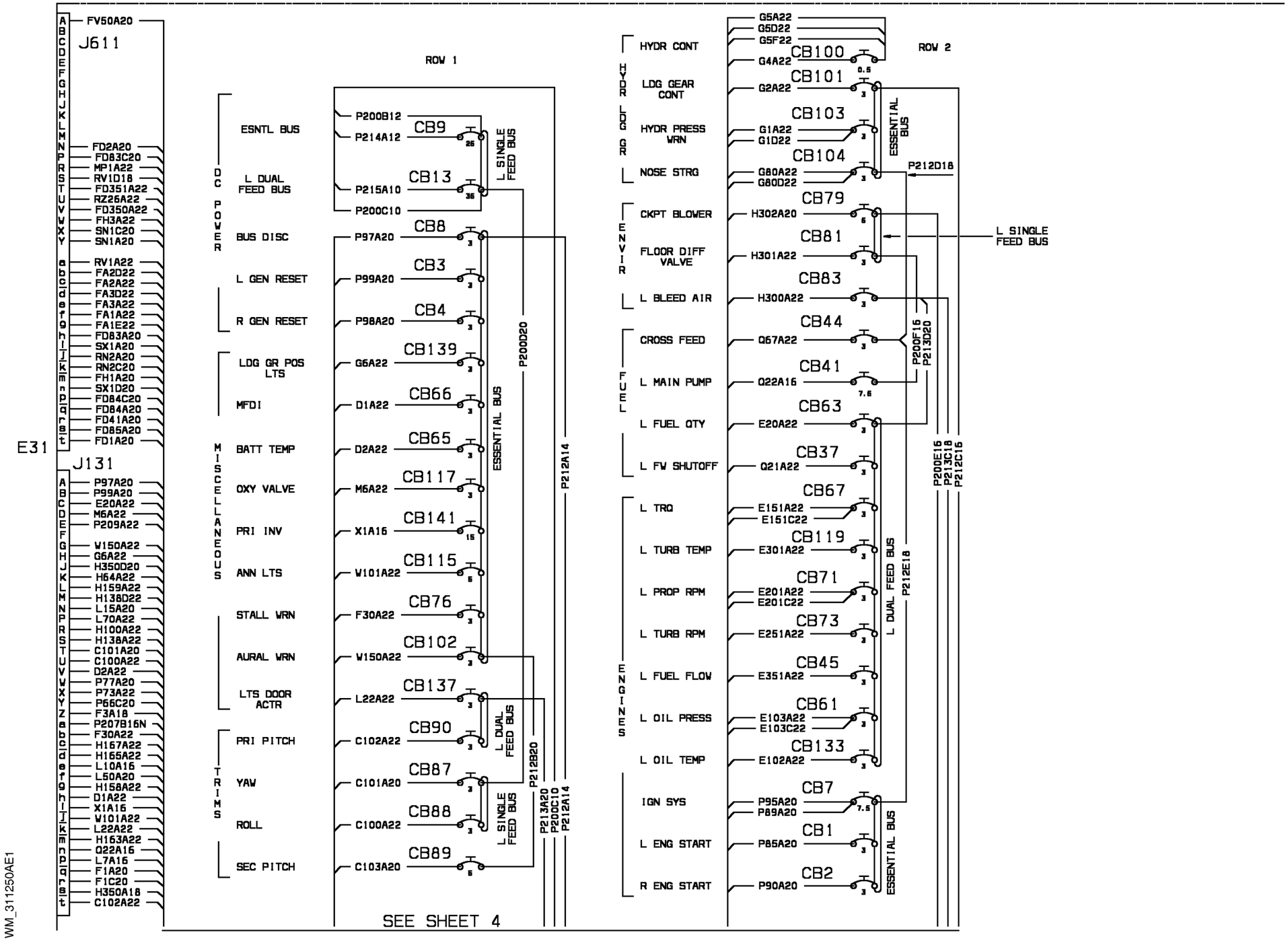


| EFFECTIVITY: 1004-1004 | INSTRUMENT & CONTROL PANELS<br>Circuit Breaker Panel-pilot |
|---|---|

**31-12-50**

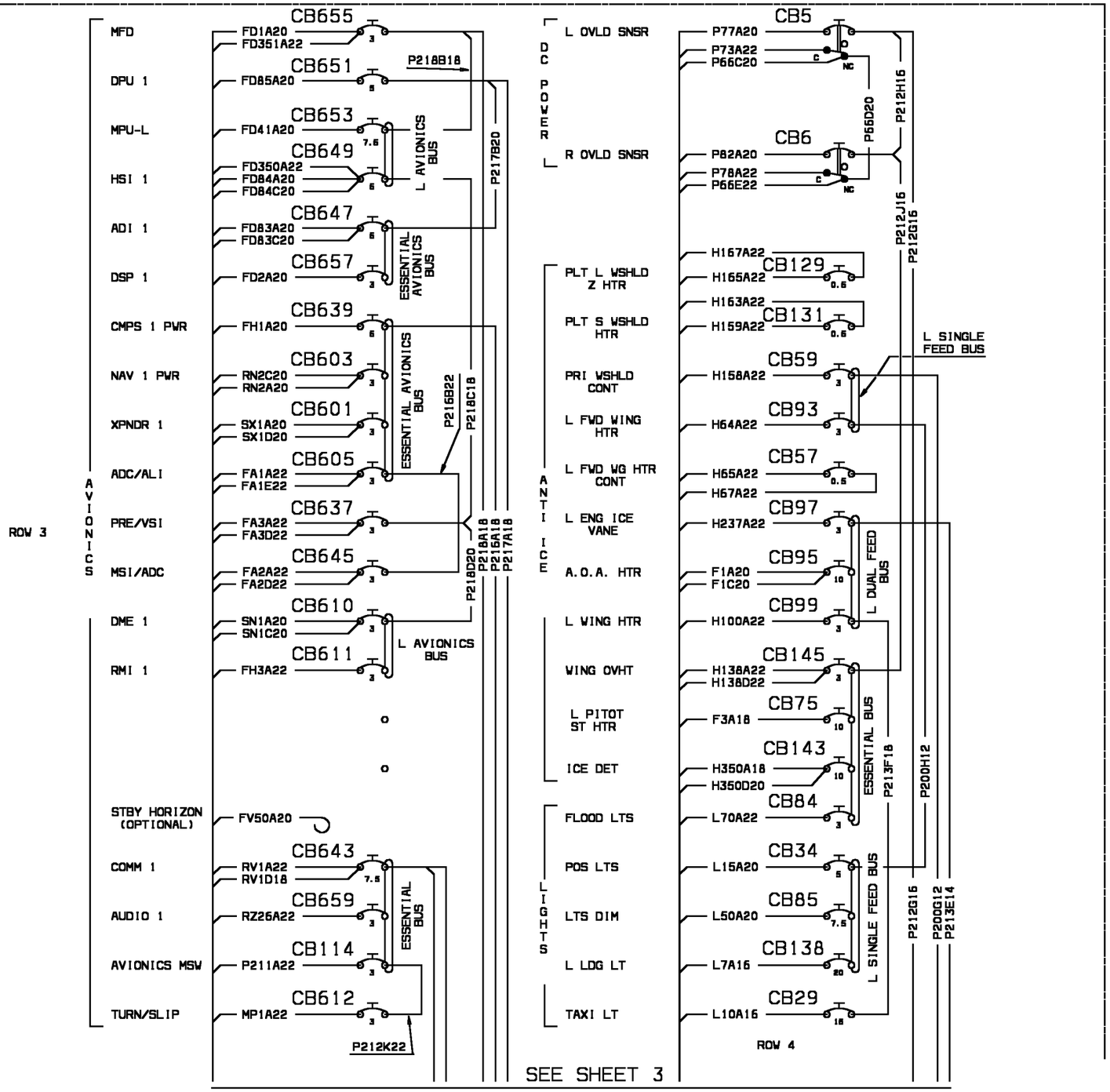


E31

WM_311250AE2

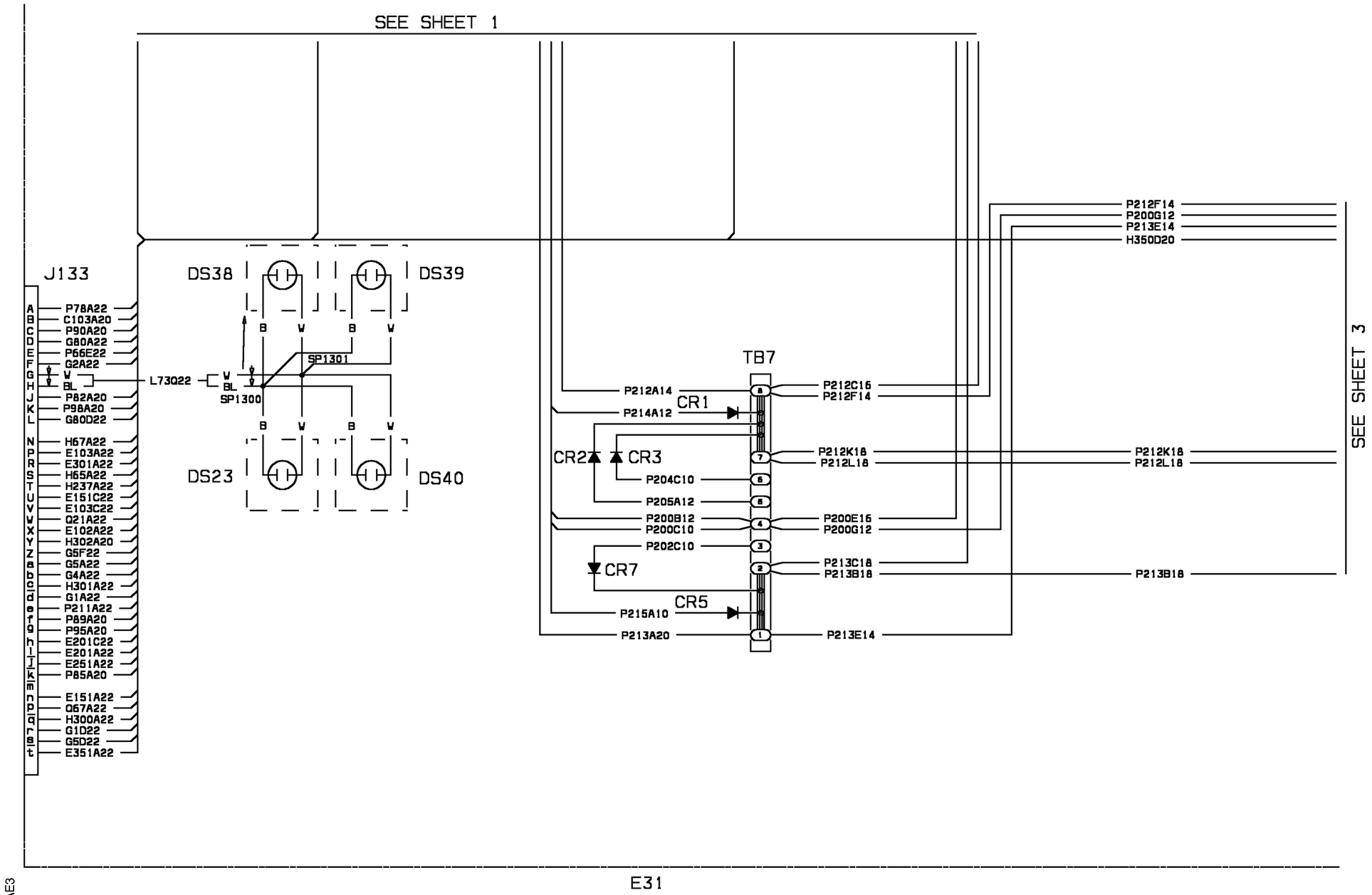


WM_311250AE3

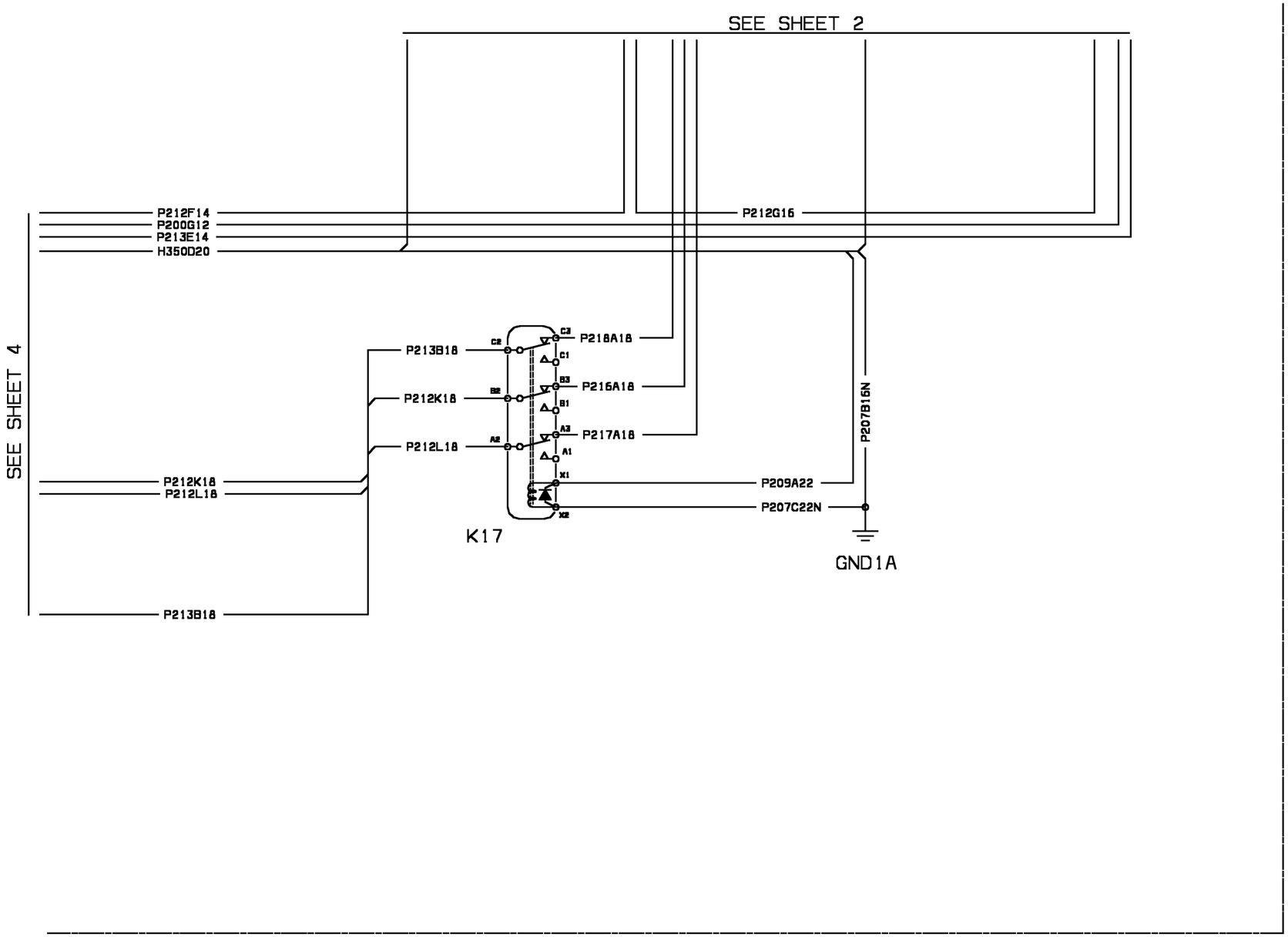


WM_311250AE4

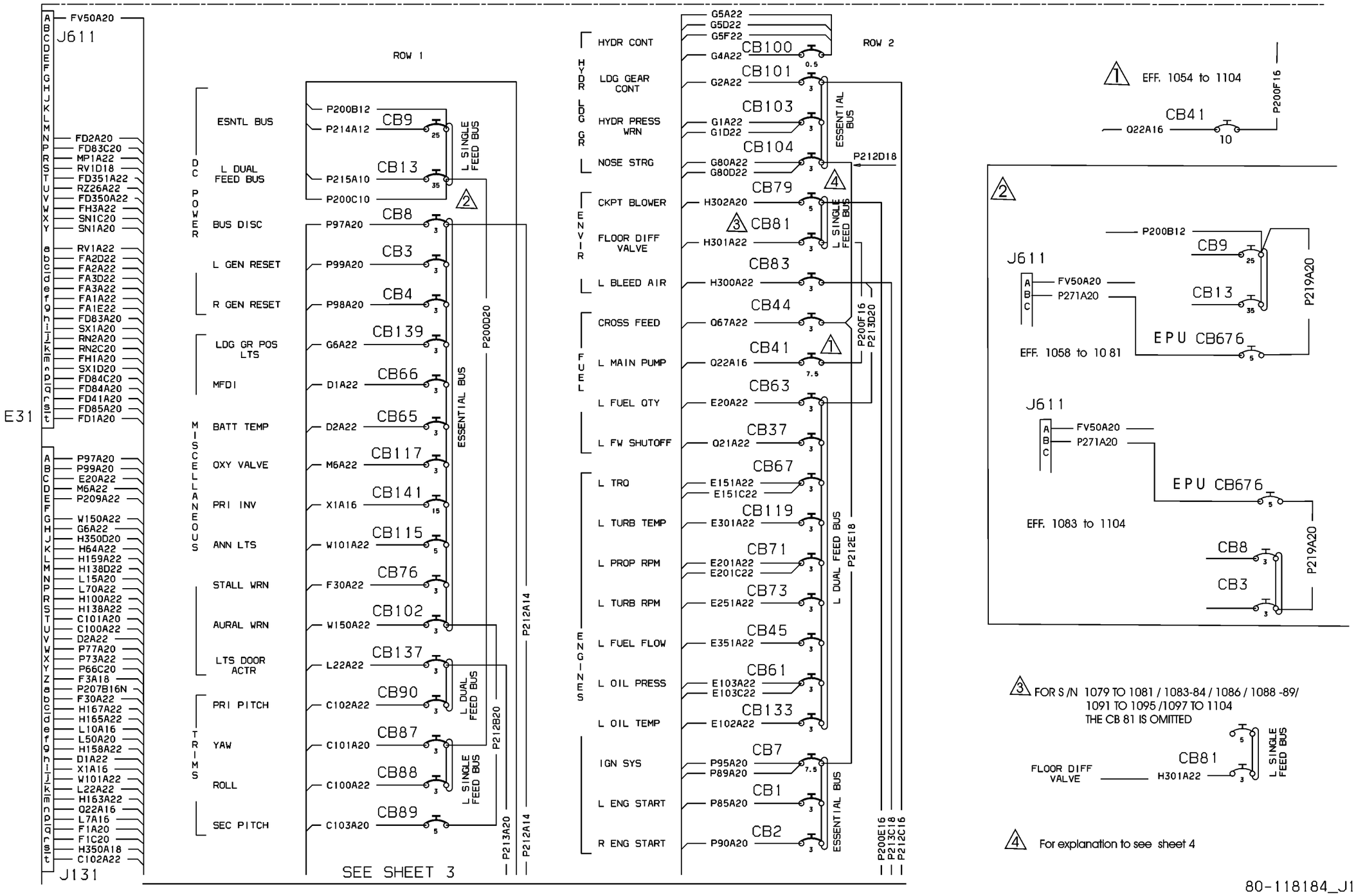
E31
J611
J131
FV50A20
FD2A20
FD83C20
MP1A22
RV1D18
FD351A22
RZ26A22
FD350A22
FH3A22
SN1C20
SN1A20
RV1A22
FA2D22
FA2A22
FA3D22
FA3A22
FA1A22
FA1E22
FD83A20
SX1A20
RN2A20
RN2C20
FH1A20
SX1D20
FD84C20
FD84A20
FD41A20
FD85A20
FD1A20
P97A20
P99A20
E20A22
M6A22
P209A22
W150A22
G6A22
H350D20
H64A22
H159A22
H138D22
L15A20
L70A22
H100A22
H138A22
C101A20
C100A22
D2A22
P77A20
P73A22
P66C20
F3A18
P207B16N
F30A22
H167A22
H165A22
L10A16
L50A20
H158A22
D1A22
X1A16
W101A22
L22A22
H163A22
Q22A16
L7A16
F1A20
F1C20
H350A18
C102A22
DC POWER
ESNTL BUS
L DUAL FEED BUS
BUS DISC
L GEN RESET
R GEN RESET
MISCELLANEOUS
LDG GR POS LTS
MFDI
BATT TEMP
OXY VALVE
PRI INV
ANN LTS
TRIMS
STALL WRN
AURAL WRN
LTS DOOR ACTR
PRI PITCH
YAW
ROLL
SEC PITCH
ROW 1
P200B12
P214A12
P215A10
P200C10
CB9
CB13
CB8
CB3
CB4
CB139
CB66
CB65
CB117
CB141
CB115
CB76
CB102
CB137
CB90
CB87
CB88
CB89
P97A20
P99A20
G6A22
D1A22
D2A22
M6A22
X1A16
W101A22
F30A22
W150A22
L22A22
C102A22
C101A20
C100A22
C103A20
L SINGLE FEED BUS
ESSENTIAL BUS
P200D20
P212A14
L DUAL FEED BUS
P212B20
P213A20
P212A14
SEE SHEET 3
HYDR LDG GR
HYDR CONT
LDG GEAR CONT
HYDR PRESS WRN
NOSE STRG
ENVIR
CKPT BLOWER
FLOOR DIFF VALVE
L BLEED AIR
FUEL
CROSS FEED
L MAIN PUMP
L FUEL QTY
L FW SHUTOFF
L TRO
ENGINES
L TURB TEMP
L PROP RPM
L TURB RPM
L FUEL FLOW
L OIL PRESS
L OIL TEMP
IGN SYS
L ENG START
R ENG START
ROW 2
G5A22
G5D22
G5F22
G4A22
G2A22
G1A22
G1D22
G80A22
G80D22
H302A20
H301A22
H300A22
Q67A22
Q22A16
E20A22
Q21A22
E151A22
E151C22
E301A22
E201A22
E201C22
E251A22
E351A22
E103A22
E103C22
E102A22
P95A20
P89A20
P85A20
P90A20
CB100
CB101
CB103
CB104
CB79
CB81
CB83
CB44
CB41
CB63
CB37
CB67
CB119
CB71
CB73
CB45
CB61
CB133
CB7
CB1
CB2
ESSENTIAL BUS
P212D18
L SINGLE FEED BUS
P200F16
P213D20
L DUAL FEED BUS
P212E18
P200E16
P213C18
P212C16
1 EFF. 1054 to 1104
CB41
Q22A16
P200F16
2
P200B12
CB9
CB13
J611
FV50A20
P271A20
P219A20
EPU CB676
EFF. 1058 to 1081
J611
FV50A20
P271A20
EPU CB676
EFF. 1083 to 1104
CB8
CB3
P219A20
3 FOR S/N 1079 TO 1081 / 1083-84 / 1086 / 1088 -89/
1091 TO 1095 /1097 TO 1104
THE CB 81 IS OMITTED
FLOOR DIFF VALVE
H301A22
CB81
L SINGLE FEED BUS
4 For explanation to see sheet 4
80-118184_J1

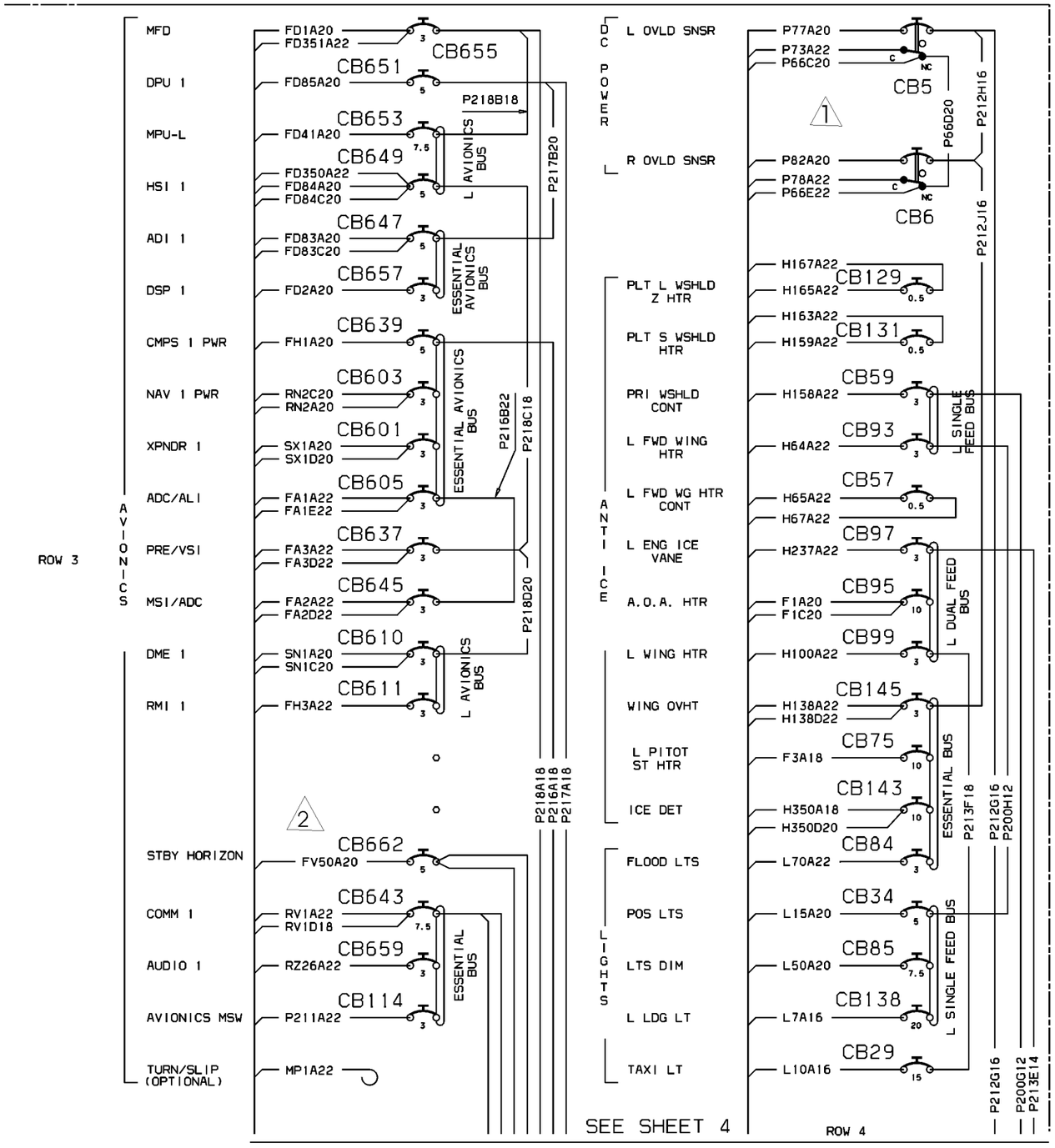


E31

1 NEW WIRING HARNESS FOR N/C 1034 to 1104

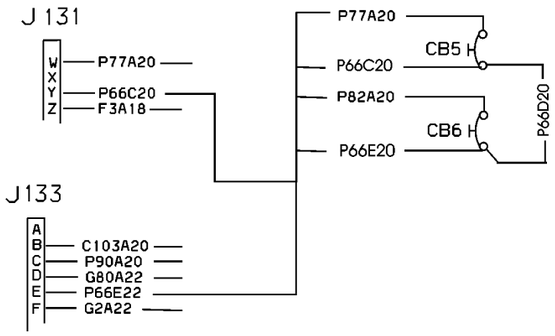


2 STBY HORIZON NEW WIRING HARNESS FOR N/C 1058 to 1104

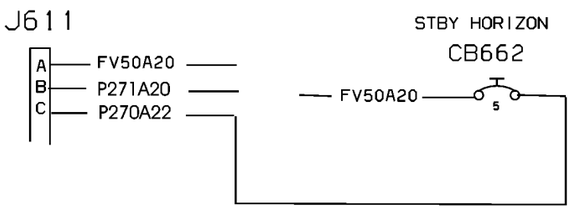


80-118184_J1

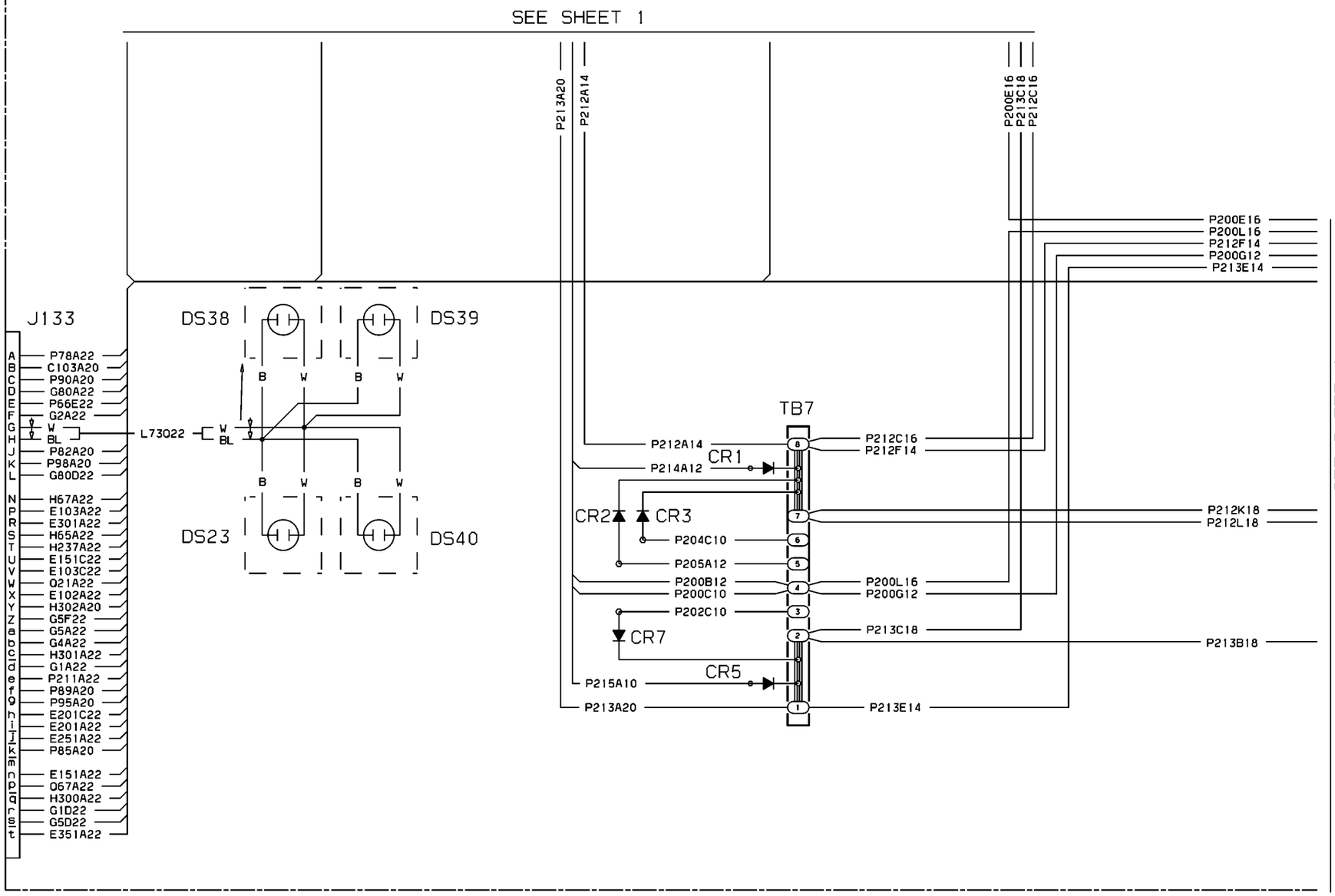
SEE SHEET 1
P213A20
P212A14
P200E16
P213C18
P212C16
P200E16
P200L16
P212F14
P200G12
P213E14
J133
A P78A22
B C103A20
C P90A20
D G80A22
E P66E22
F G2A22
G W
H BL
J P82A20
K P98A20
L G80D22
N H67A22
P E103A22
R E301A22
S H65A22
T H237A22
U E151C22
V E103C22
W Q21A22
X E102A22
Y H302A20
Z G5F22
a G5A22
b G4A22
c H301A22
d G1A22
e P211A22
f P89A20
g P95A20
h E201C22
i E201A22
j E251A22
k P85A20
m E151A22
n Q67A22
p H300A22
q G1D22
r G5D22
s G5D22
t E351A22
DS38
DS39
DS23
DS40
B W B W
L73022
W
BL
TB7
P212A14
P214A12
CR1
P212C16
P212F14
CR2
CR3
P212K18
P212L18
P204C10
P205A12
P200B12
P200C10
P200L16
P200G12
P202C10
CR7
P213C18
P213B18
CR5
P215A10
P213A20
P213E14
SEE SHEET 4
E31

80-118184_J1

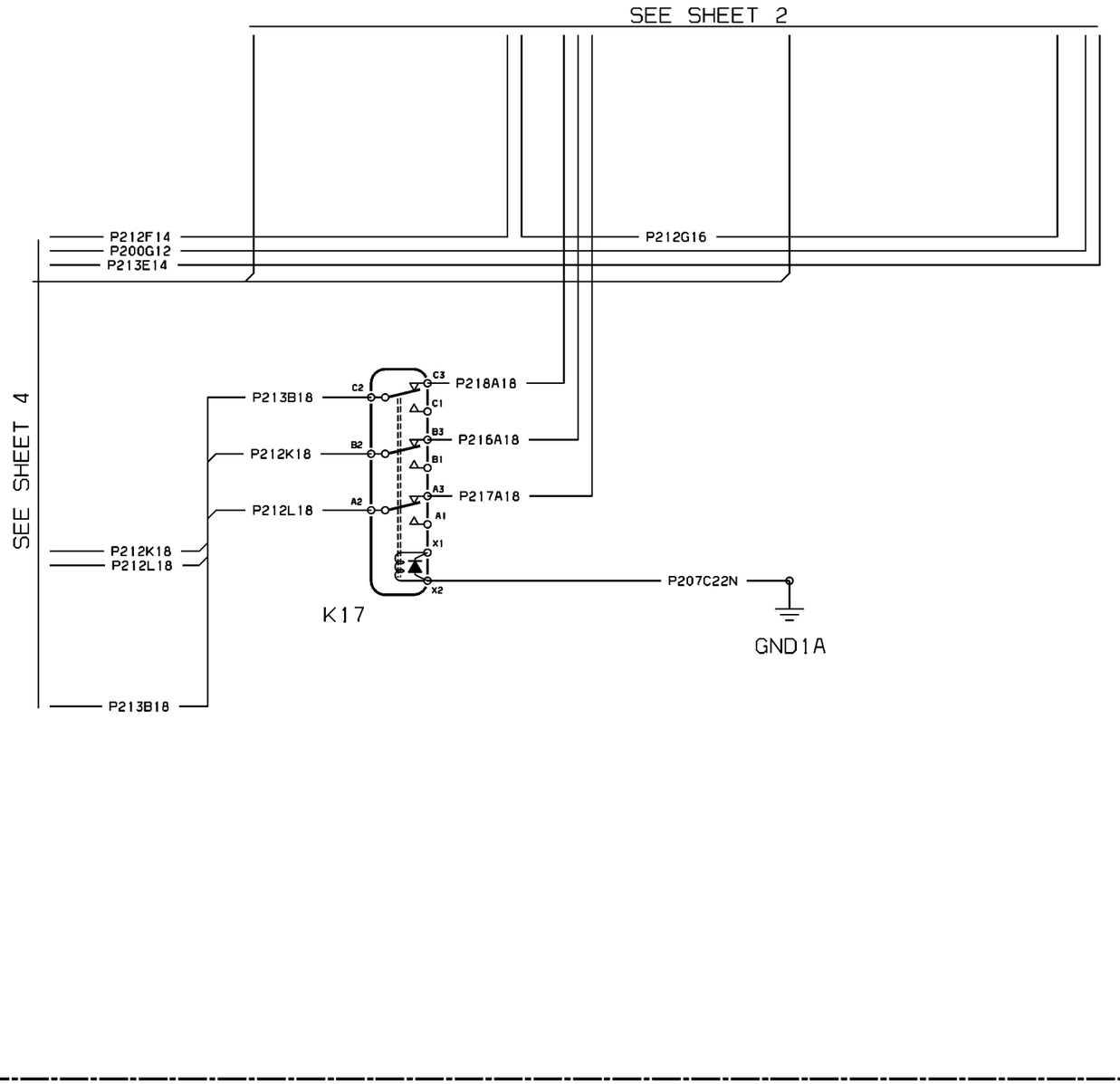


4 Refer to sheet 1

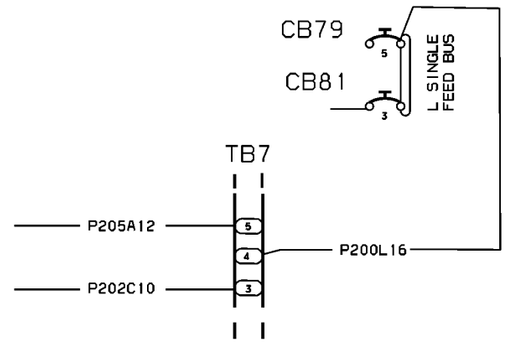


NEW WIRING HARNESS FOR N/C 1058 to 1104

E31

80-118184_J1

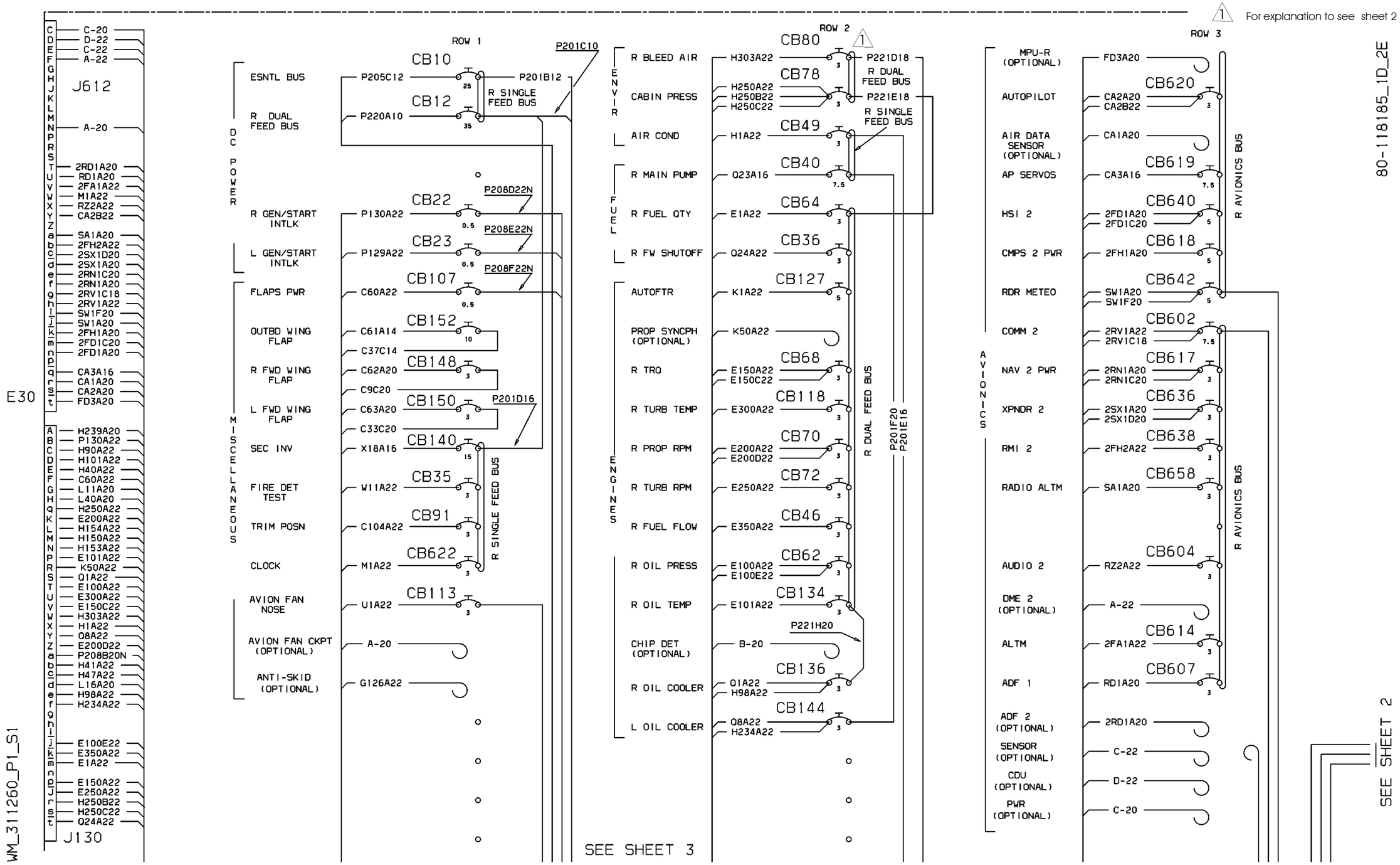


| EFFECTIVITY: | INSTRUMENT & CONTROL PANELS<br>C / B Panel-Copilot standard version |
|---|---|

**31-12-60**

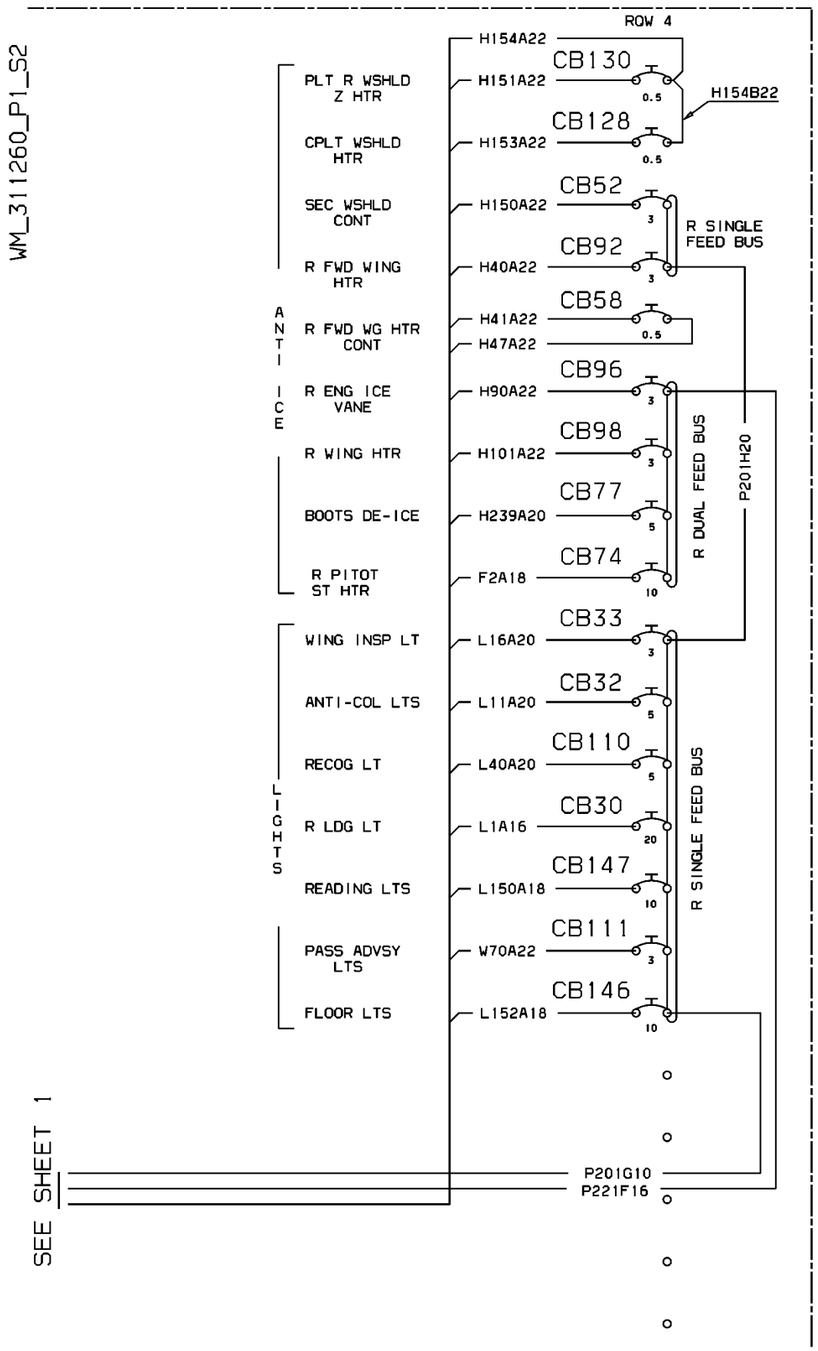


E30

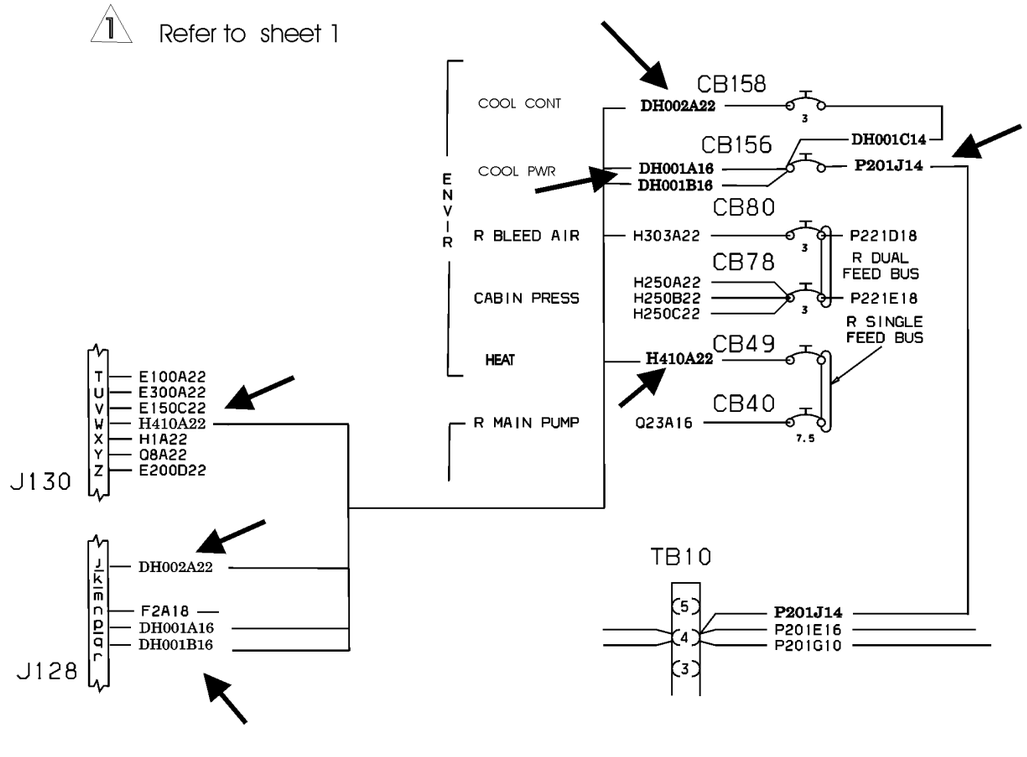


NEW WIRING HARNESS FOR N/C 1058 to 1104

80-118185_1D_2E

| EFFECTIVITY: | INSTRUMENT & CONTROL PANELS<br>C / B Panel-Copilot standard version |
|---|---|

**31-12-60**

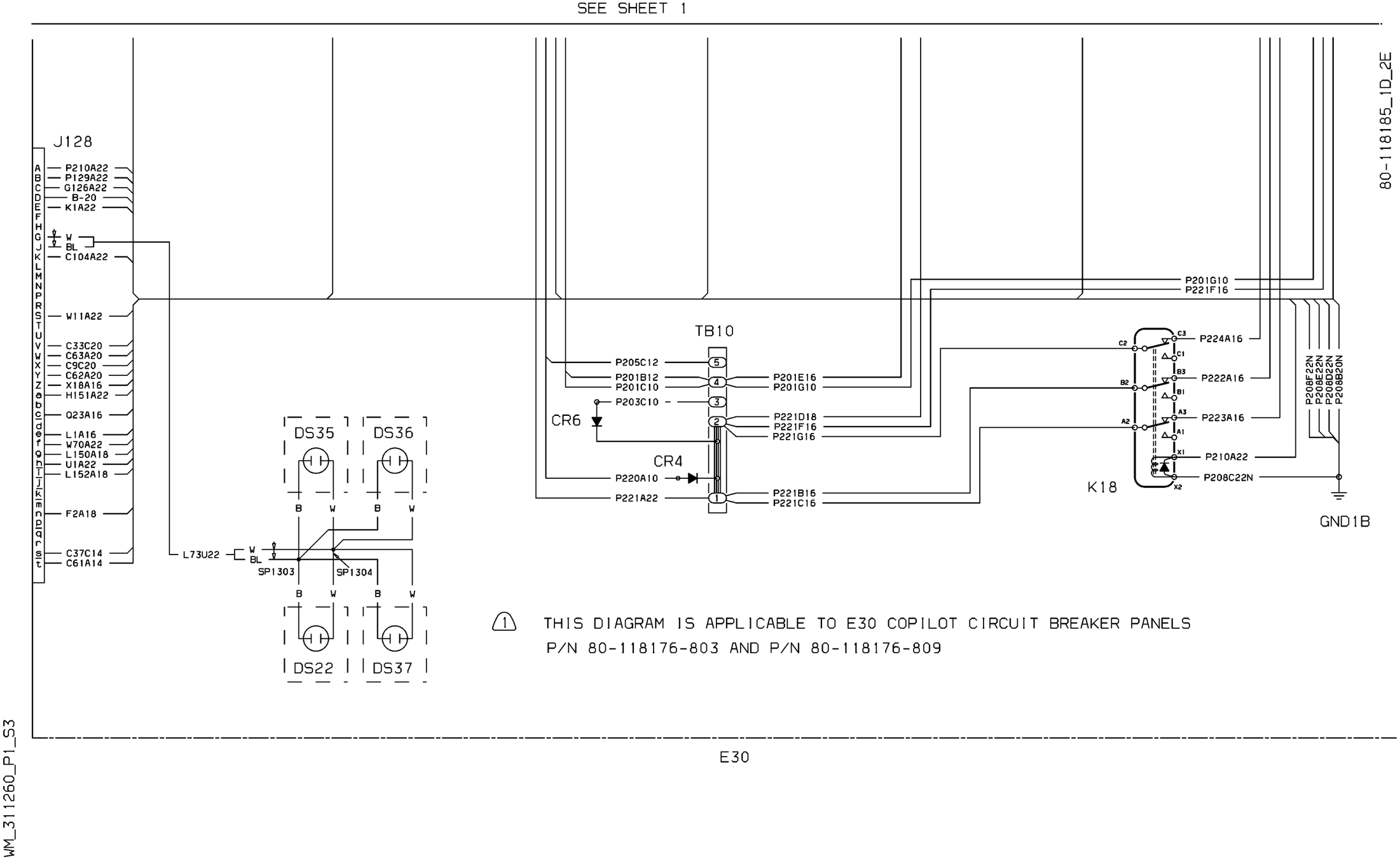
SEE SHEET 1
80-118185_1D_2E
J128
P210A22
P129A22
G126A22
B-20
K1A22
W
BL
C104A22
W11A22
C33C20
C63A20
C9C20
C62A20
X18A16
H151A22
Q23A16
L1A16
W70A22
L150A18
U1A22
L152A18
F2A18
C37C14
C61A14
L73U22
DS35
DS36
DS22
DS37
SP1303
SP1304
TB10
P205C12
P201B12
P201C10
P203C10
CR6
CR4
P220A10
P221A22
P201E16
P201G10
P221D18
P221F16
P221G16
P221B16
P221C16
P201G10
P221F16
K18
P224A16
P222A16
P223A16
P210A22
P208C22N
P208F22N
P208E22N
P208D22N
P208B20N
GND1B
THIS DIAGRAM IS APPLICABLE TO E30 COPILOT CIRCUIT BREAKER PANELS
P/N 80-118176-803 AND P/N 80-118176-809
WM_311260_P1_S3
E30

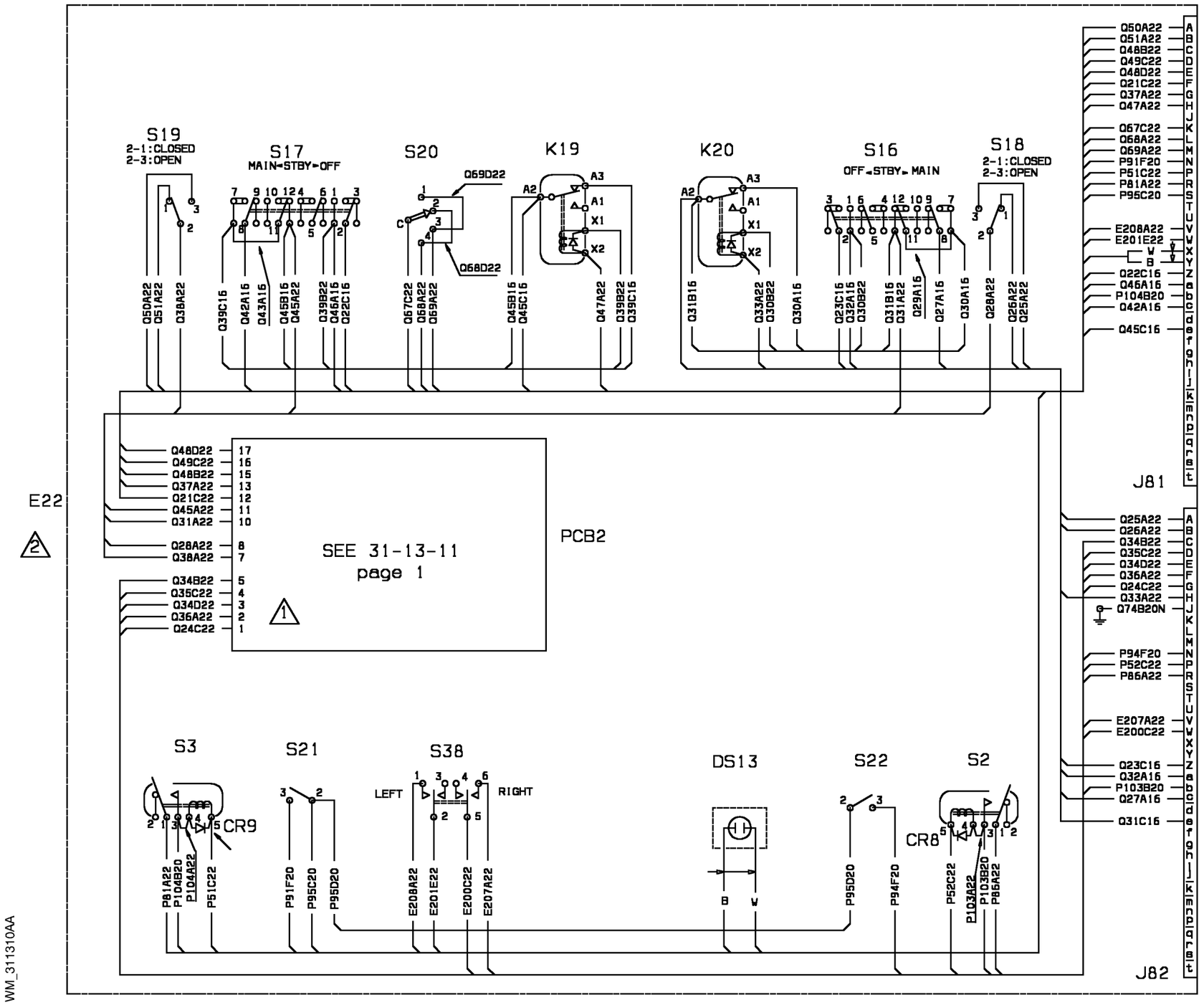


WM_311310AA

1 P/N 80-118190-401 Printed Printed Circuit, installed on Airplanes SN 1004 to 1015 during manifacturing, will be replaced as a spare part by 80-118312-401. The two P/N's are fully interchangeable.

2 P/N 80-118189-801 Fuel Control Panel installed on Airplanes SN 1004 to 1015 during manifacturing, will be replaced as a spare part by 80-118326-801. The two P/N's are fully interchangeable.

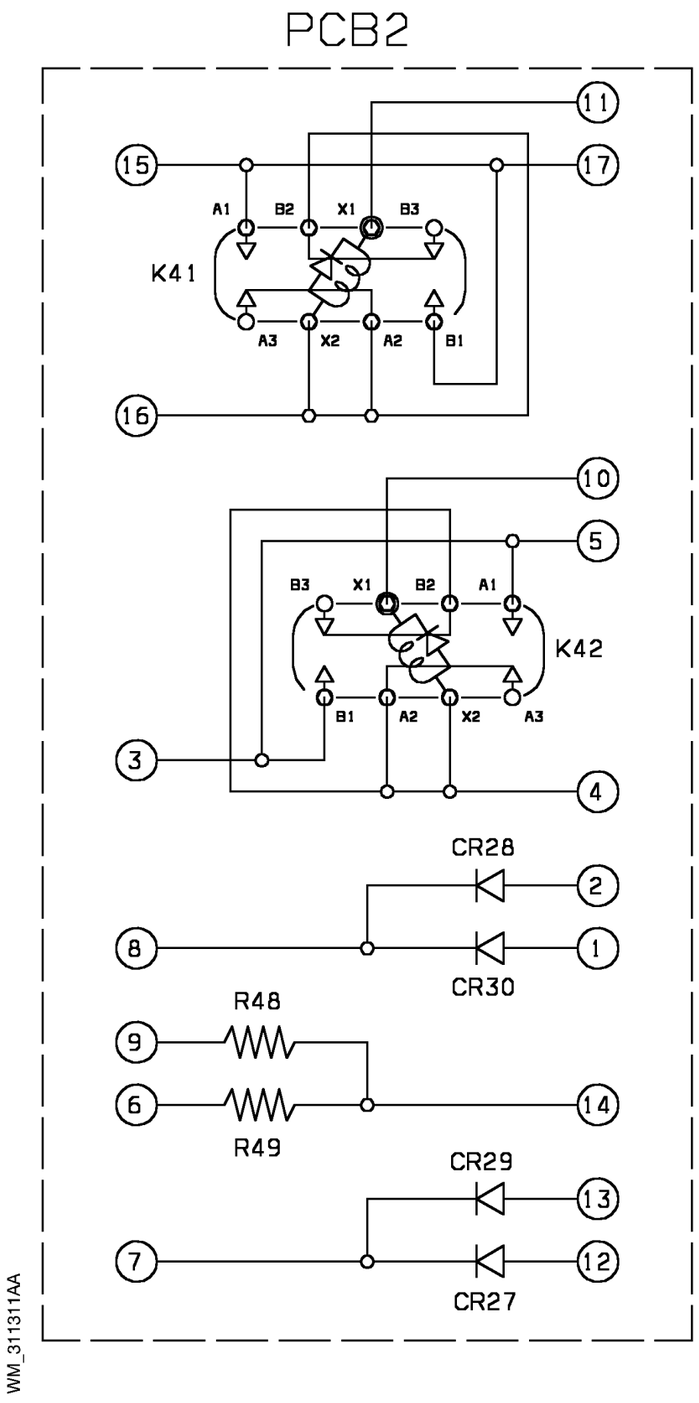


| EFFECTIVITY: | INSTRUMENT & CONTROL PANELS<br>Fuel Control Panel (PCB2) |
|---|---|

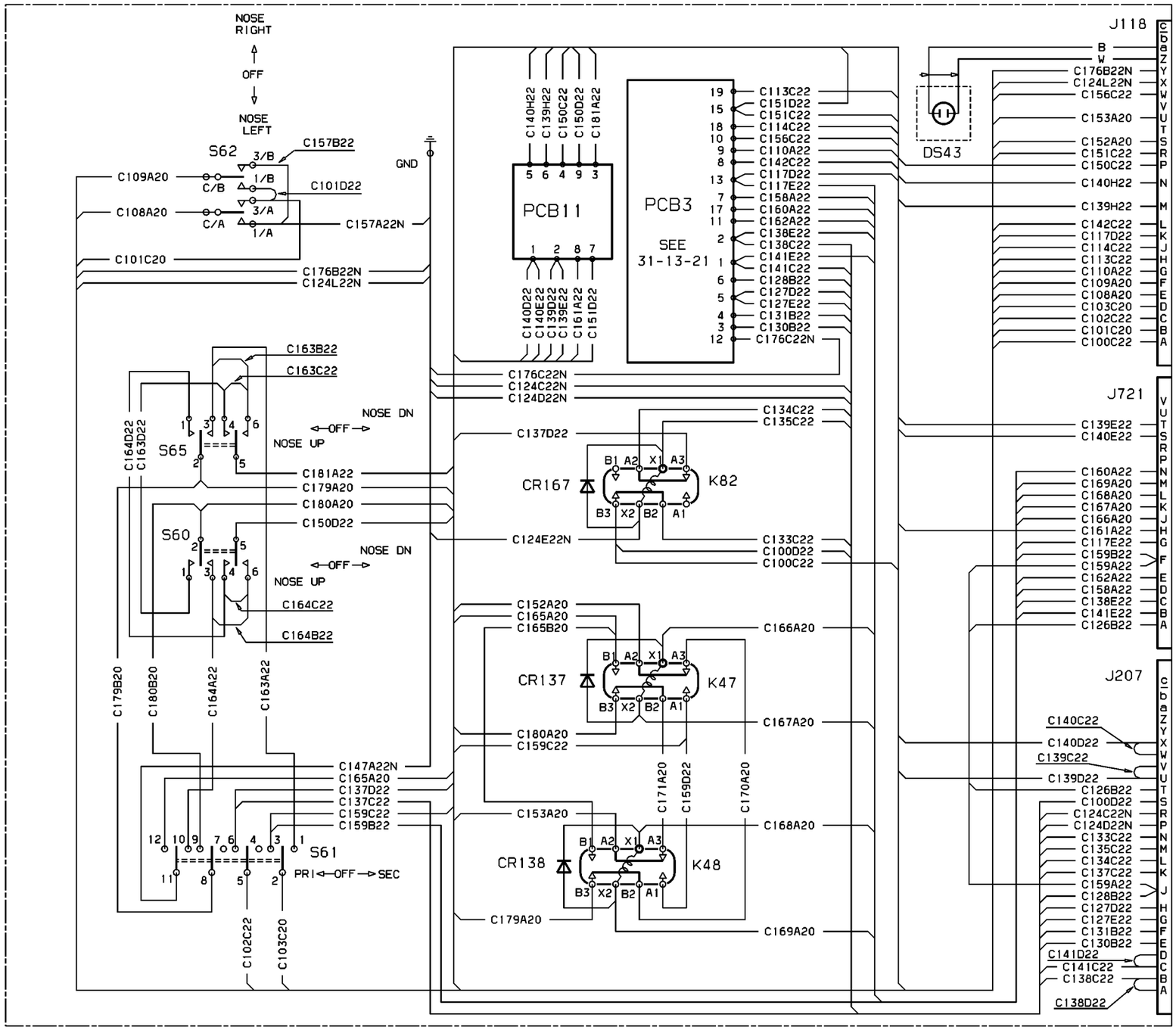
NOSE RIGHT
OFF
NOSE LEFT
S62
3/B
1/B
3/A
1/A
C/B
C/A
C157B22
C109A20
C101D22
C108A20
C157A22N
C101C20
C176B22N
C124L22N
GND
C140H22
C139H22
C150C22
C150D22
C181A22
PCB11
5 6 4 9 3
1 2 8 7
C140D22
C140E22
C139D22
C139E22
C161A22
C151D22
PCB3
SEE 31-13-21
19 C113C22
15 C151D22
C151C22
18 C114C22
10 C156C22
9 C110A22
8 C142C22
13 C117D22
C117E22
7 C158A22
17 C160A22
11 C162A22
2 C138E22
C138C22
1 C141E22
C141C22
6 C128B22
5 C127D22
C127E22
4 C131B22
3 C130B22
12 C176C22N
DS43
J118
B
W
C176B22N
C124L22N
C156C22
C153A20
C152A20
C151C22
C150C22
C140H22
C139H22
C142C22
C117D22
C114C22
C113C22
C110A22
C109A20
C108A20
C103C20
C102C22
C101C20
C100C22
J721
C139E22
C140E22
C160A22
C169A20
C168A20
C167A20
C166A20
C161A22
C117E22
C159B22
C159A22
C162A22
C158A22
C138E22
C141E22
C126B22
J207
C140C22
C140D22
C139C22
C139D22
C126B22
C100D22
C124C22N
C124D22N
C133C22
C135C22
C134C22
C137C22
C159A22
C128B22
C127D22
C127E22
C131B22
C130B22
C141D22
C141C22
C138C22
C138D22
C163B22
C163C22
NOSE DN
OFF
NOSE UP
S65
C164D22
C163D22
C181A22
C179A20
C180A20
C150D22
S60
C164C22
C164B22
C179B20
C180B20
C164A22
C163A22
C147A22N
C165A20
C137D22
C137C22
C159C22
C159B22
S61
PRI
SEC
C102C22
C103C20
C124E22N
C137D22
CR167
K82
B1 A2 X1 A3
B3 X2 B2 A1
C134C22
C135C22
C133C22
C100D22
C100C22
C152A20
C165A20
C165B20
CR137
K47
C166A20
C167A20
C180A20
C159C22
C153A20
CR138
K48
C168A20
C169A20
C179A20
C171A20
C159D22
C170A20
E42
WM_311320_P1_S1
80-118212_1E

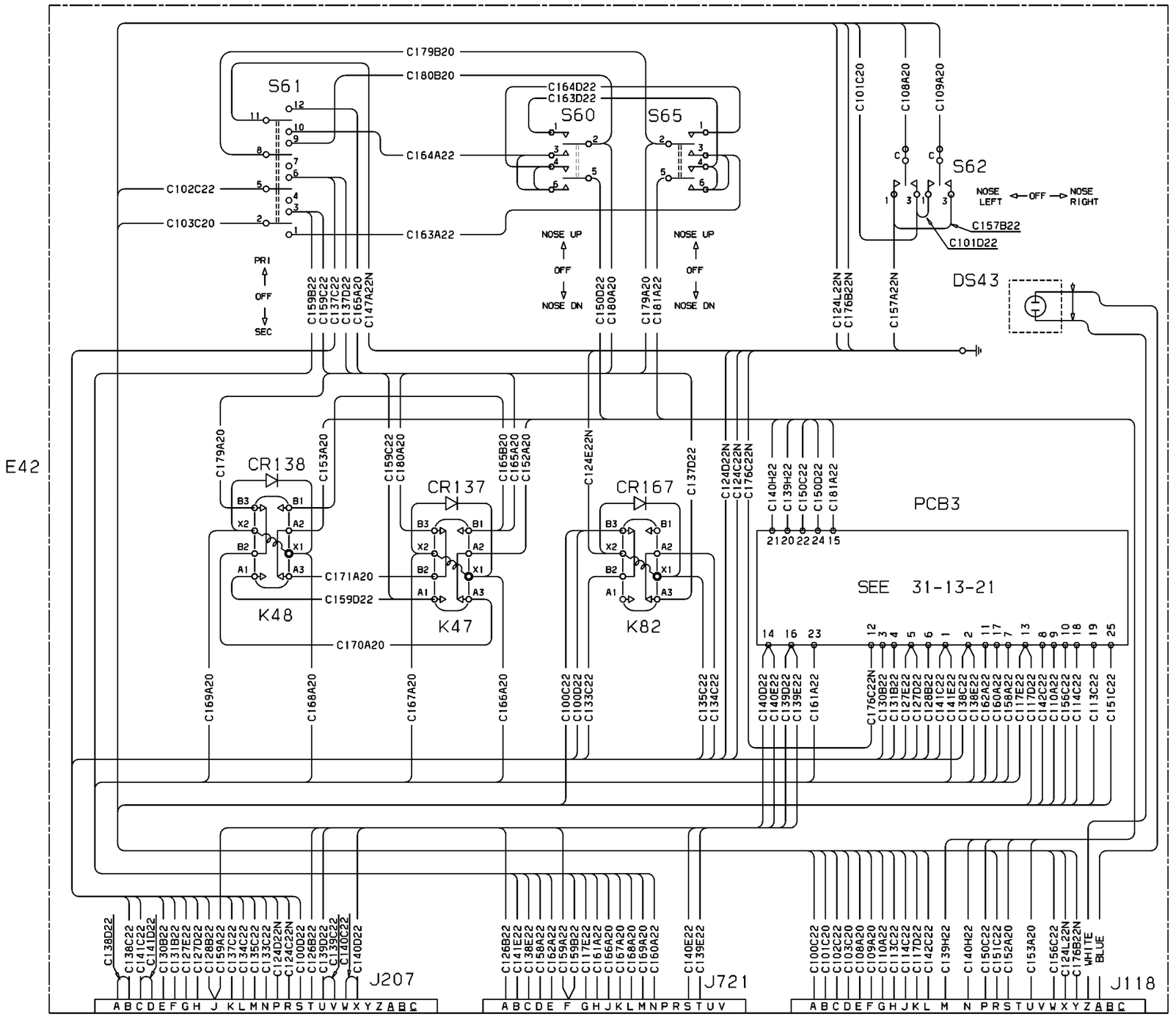
E42
S61
S60
S65
S62
C179B20
C180B20
C164D22
C163D22
C164A22
C102C22
C103C20
C163A22
C101C20
C108A20
C109A20
NOSE LEFT
OFF
NOSE RIGHT
C157B22
C101D22
PRI
OFF
SEC
NOSE UP
OFF
NOSE DN
C159B22
C159C22
C137C22
C137D22
C165A20
C147A22N
C150D22
C180A20
C179A20
C181A22
C124L22N
C176B22N
C157A22N
DS43
CR138
CR137
CR167
K48
K47
K82
C171A20
C159D22
C170A20
C153A20
C159C22
C180A20
C165B20
C165A20
C152A20
C124E22N
C137D22
C124D22N
C124C22N
C176C22N
C140H22
C139H22
C150C22
C150D22
C181A22
PCB3
SEE 31-13-21
C169A20
C168A20
C167A20
C166A20
C100C22
C100D22
C133C22
C135C22
C134C22
C140D22
C140E22
C139D22
C139E22
C161A22
C176C22N
C130B22
C131B22
C127E22
C127D22
C128B22
C141C22
C141E22
C138C22
C138E22
C162A22
C160A22
C158A22
C117D22
C142C22
C110A22
C156C22
C114C22
C113C22
C151C22
C138D22
C138C22
C141C22
C141D22
C130B22
C131B22
C127E22
C127D22
C128B22
C159A22
C137C22
C134C22
C135C22
C124D22N
C124C22N
C100D22
C126B22
C139D22
C133C22
C140C22
C140D22
J207
C126B22
C141E22
C138E22
C158A22
C162A22
C159A22
C159B22
C117E22
C161A22
C166A20
C167A20
C168A20
C169A20
C160A22
C140E22
C139E22
J721
C100C22
C101C20
C102C22
C103C20
C108A20
C109A20
C110A22
C113C22
C114C22
C117D22
C142C22
C139H22
C140H22
C150C22
C151C22
C152A20
C153A20
C156C22
C124L22N
C176B22N
WHITE
BLUE
J118
WM_311320_P2_S1
80-118314_1A

Effec. 1004 to 1057 if SB 80-0160 (Recommended) embodied

E42

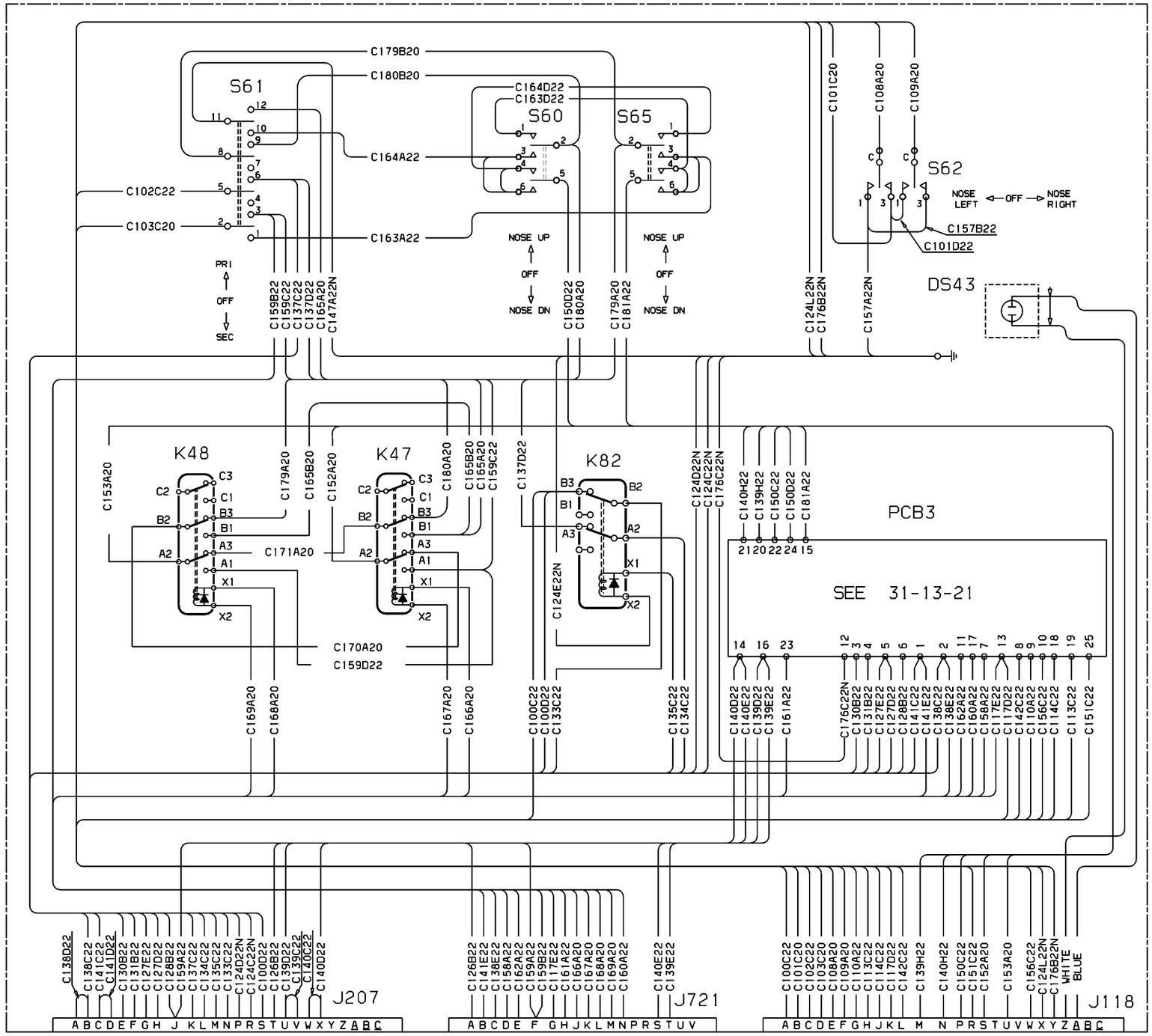


WM_311320_P3_S1

80-118314_1B

PCB3

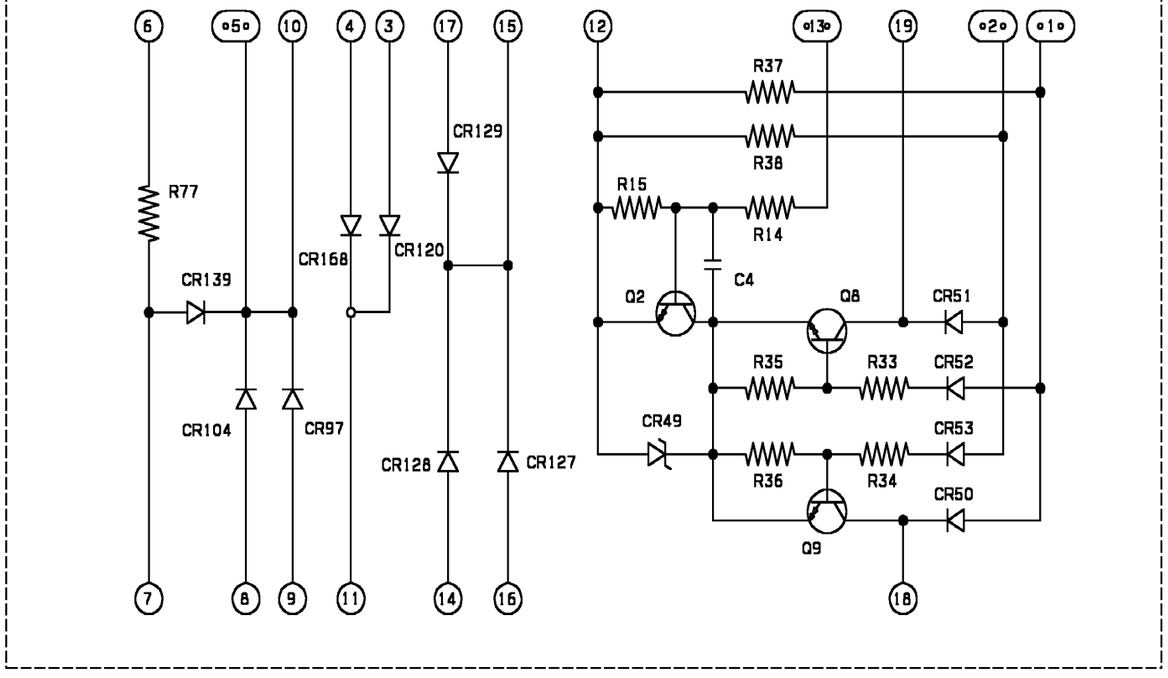


WM_311321AB

PCB3

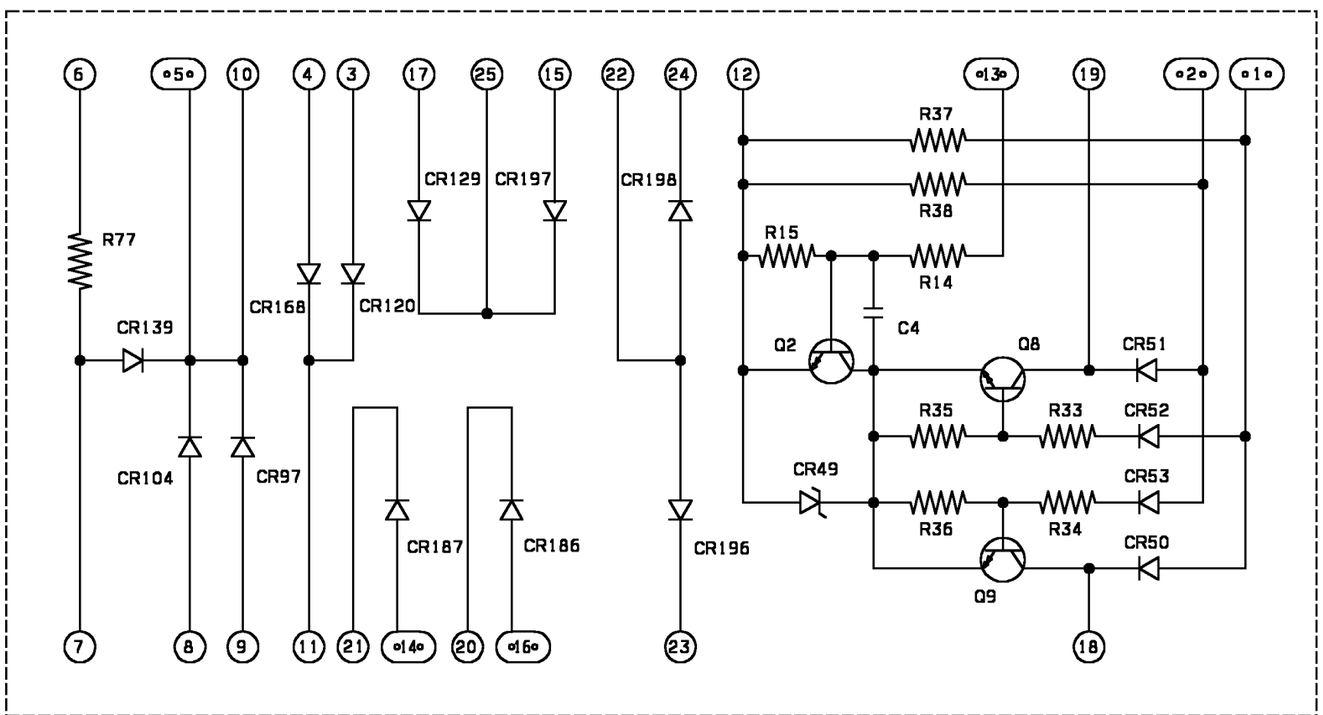


WM_311321AC

E89

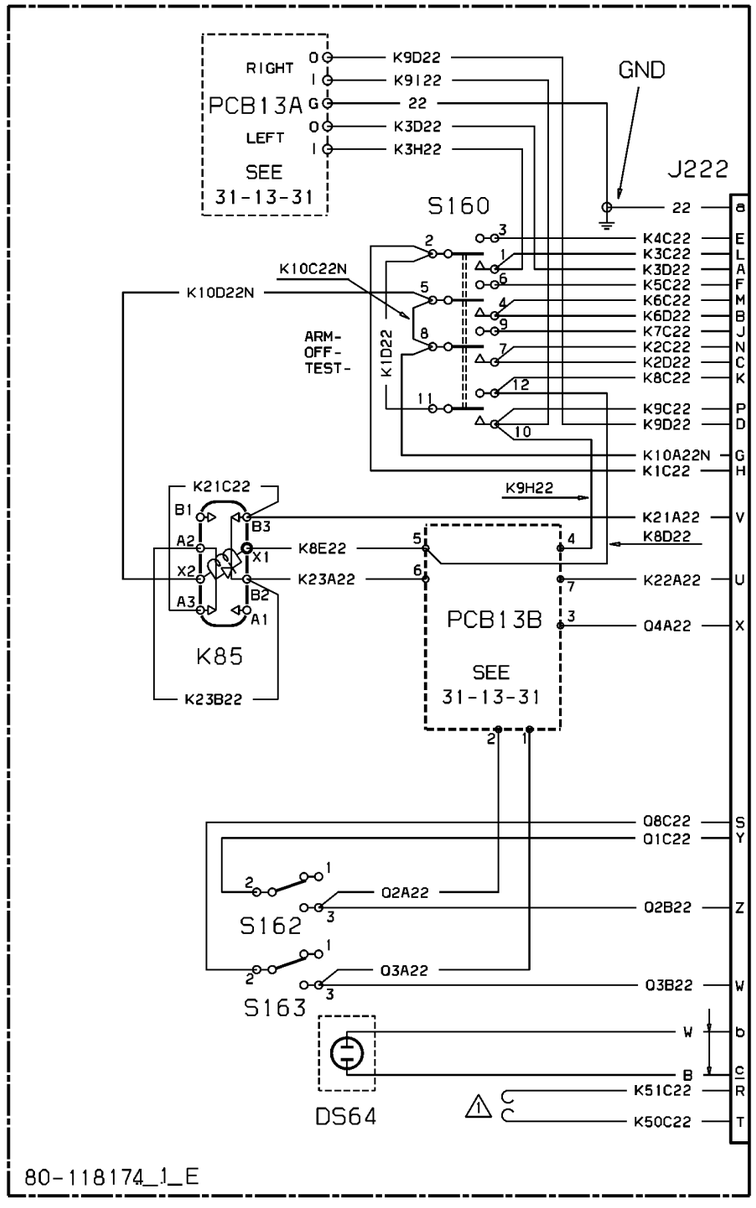


EFFECTIVITY : 1004-1015

⚠ SPARE WIRE

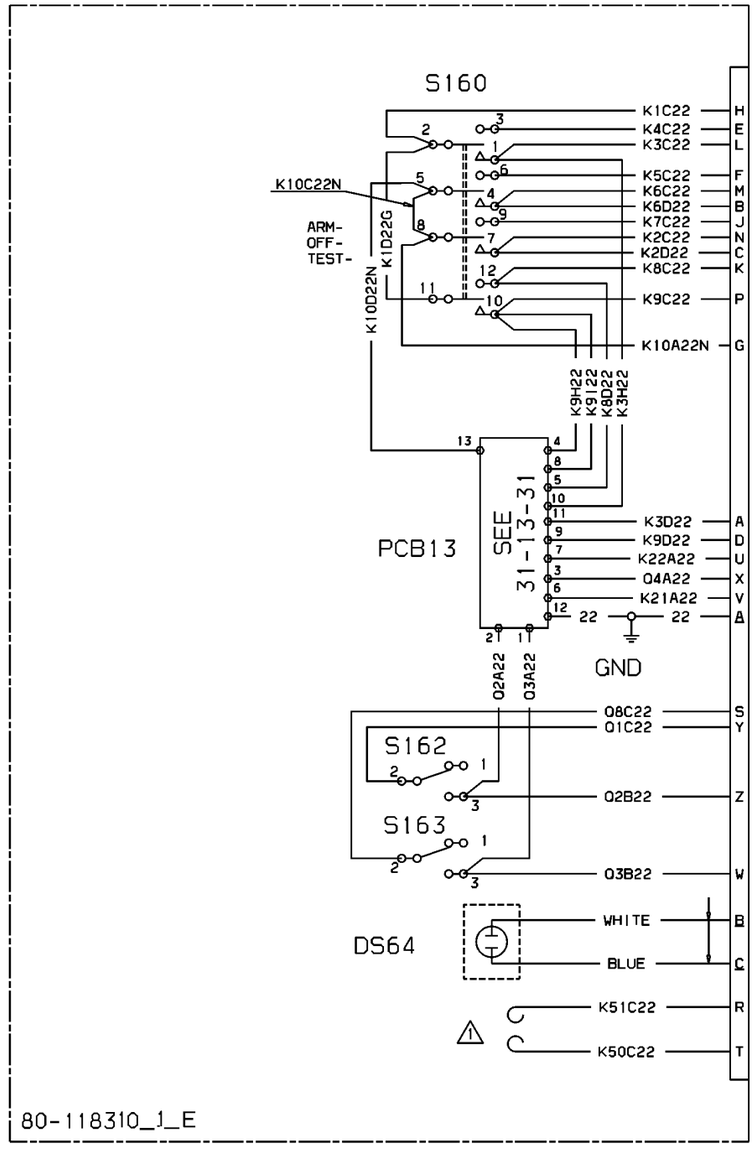


E89

⚠ SPARE WIRE

EFFECTIVITY : 1016 - 1104

WM_311330_P1_S1_UNIONE

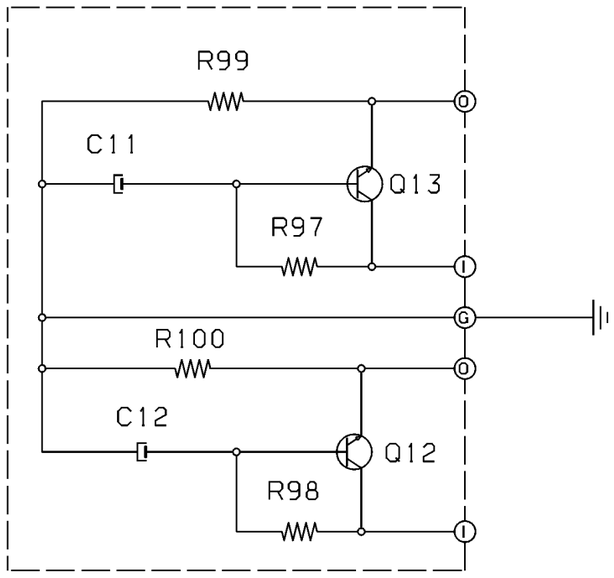


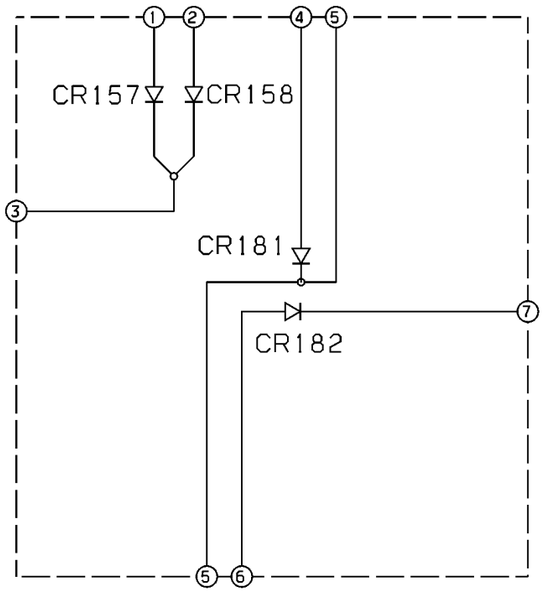


WM_311331_P1_S1_UNIONE

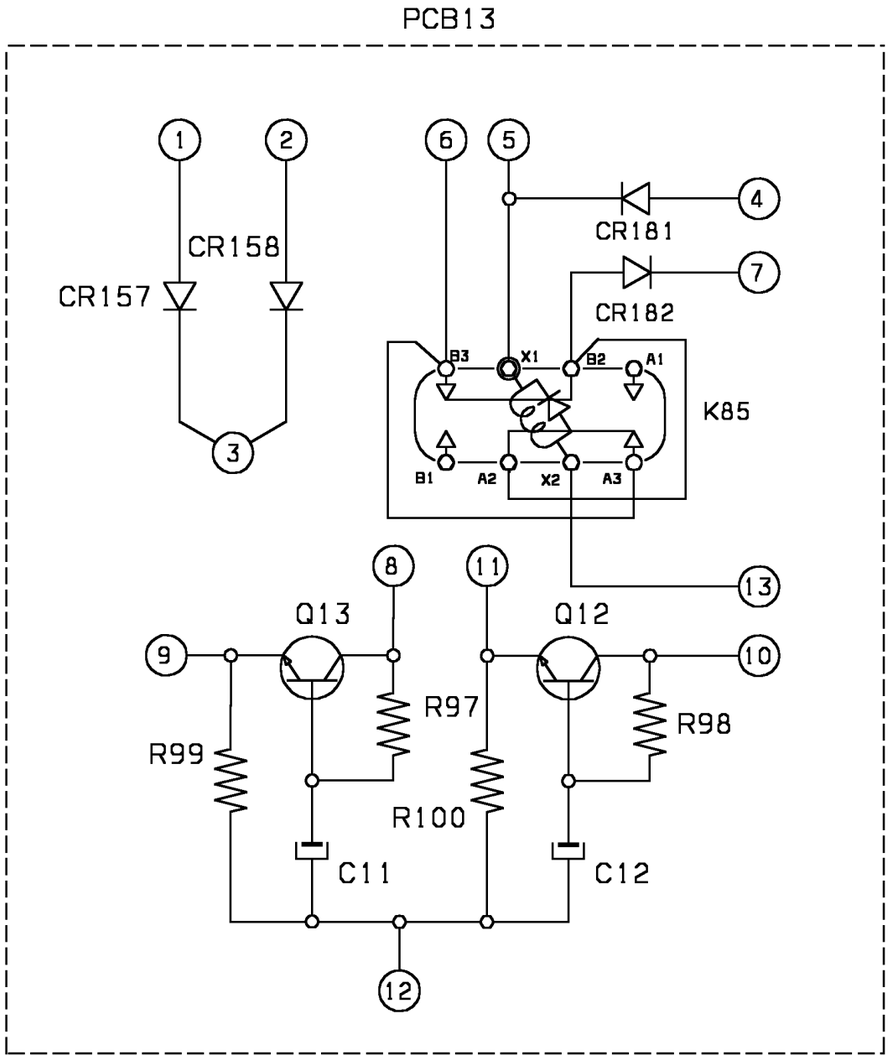


WM_311331_P2_S1

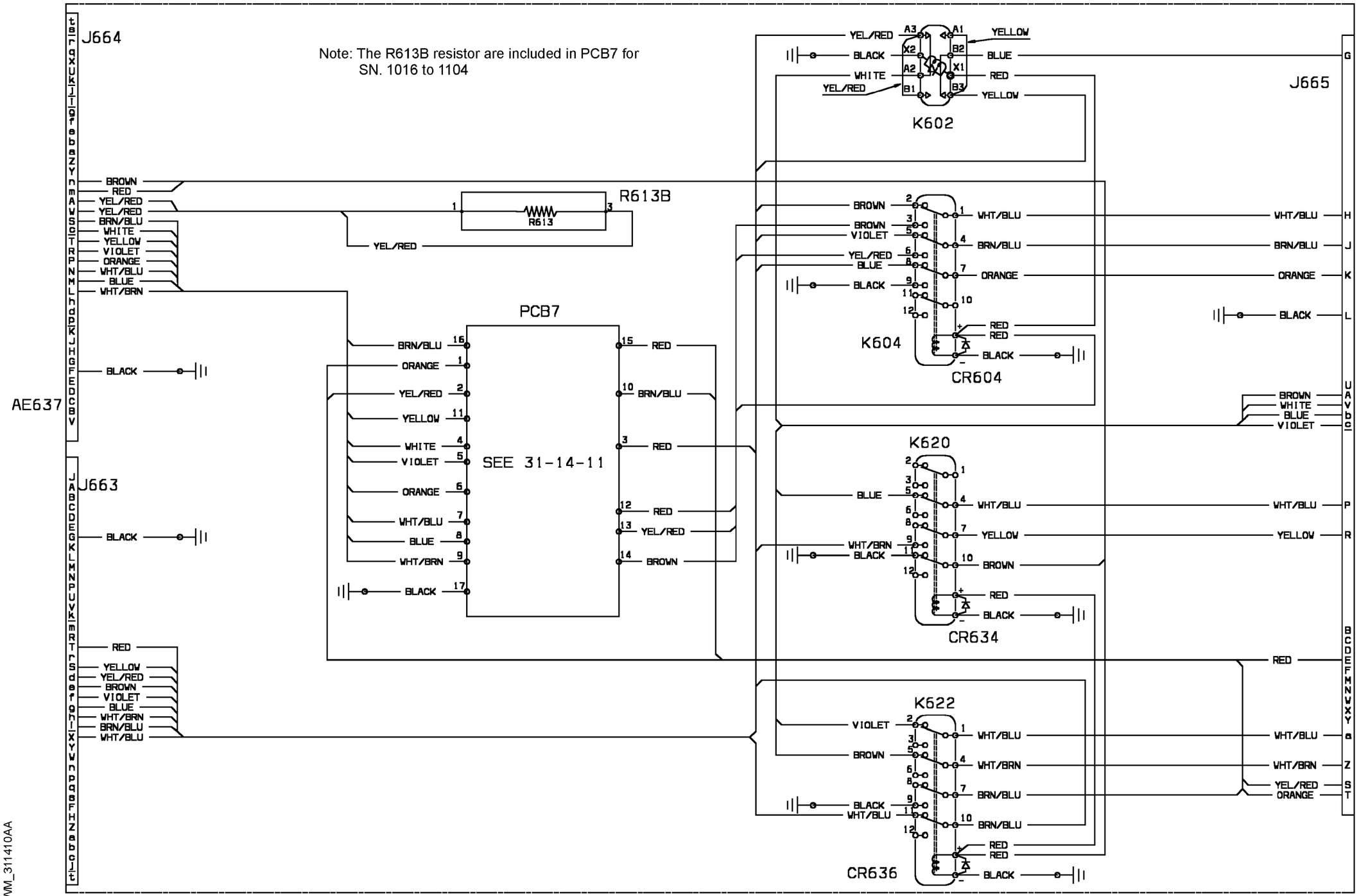


| EFFECTIVITY: | INSTRUMENT & CONTROL PANELS<br>Bias Box (AE637) |
|---|---|

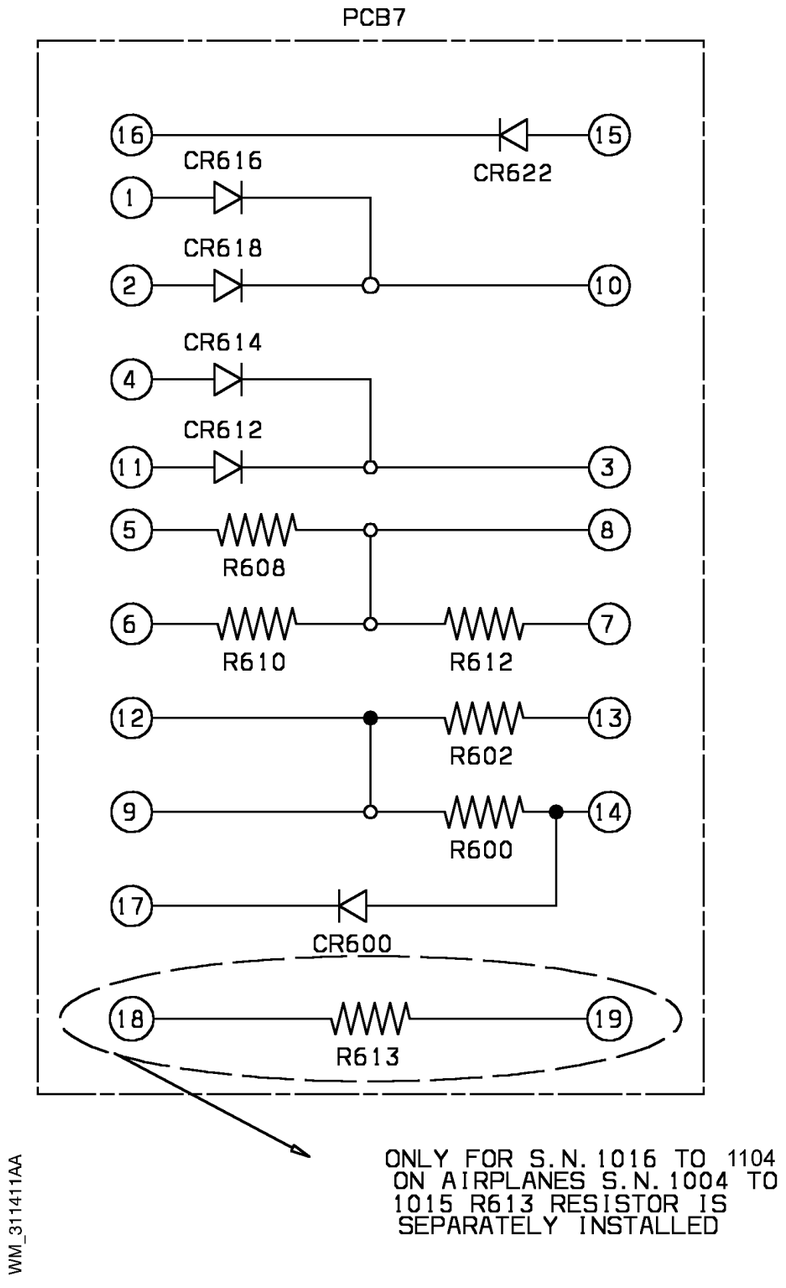
PCB7
16
15
CR616
CR622
1
CR618
2
10
CR614
4
CR612
11
3
5
8
R608
6
7
R610
R612
12
13
R602
9
14
R600
17
CR600
18
19
R613
ONLY FOR S.N. 1016 TO 1104
ON AIRPLANES S.N. 1004 TO
1015 R613 RESISTOR IS
SEPARATELY INSTALLED
WM_311411AA

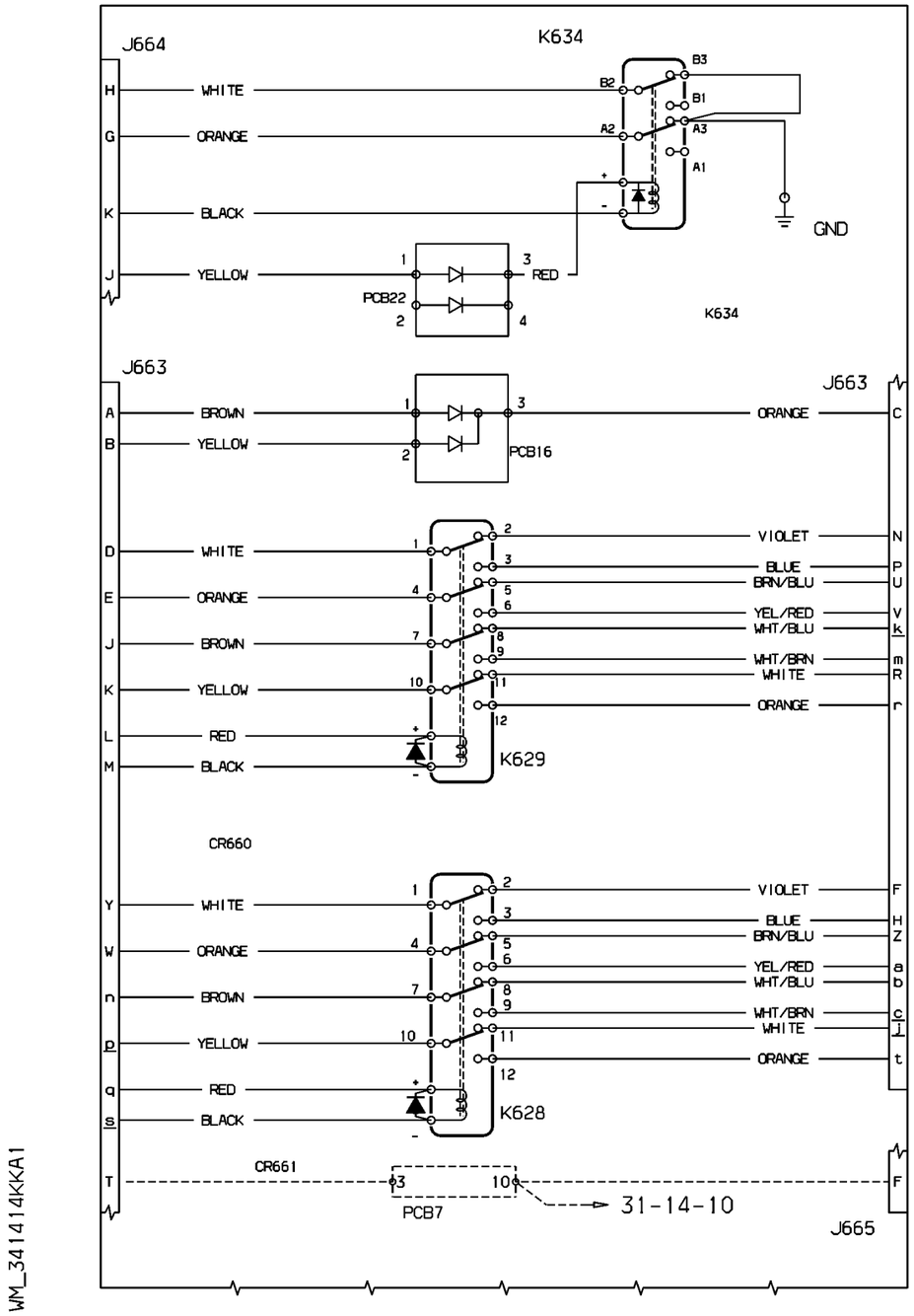


WM_341414KKA1

| EFFECTIVITY: | INSTRUMENT & CONTROL PANELS<br>Bias Box Kit Uns 1 (a-b-d-k) Optional |
|---|---|

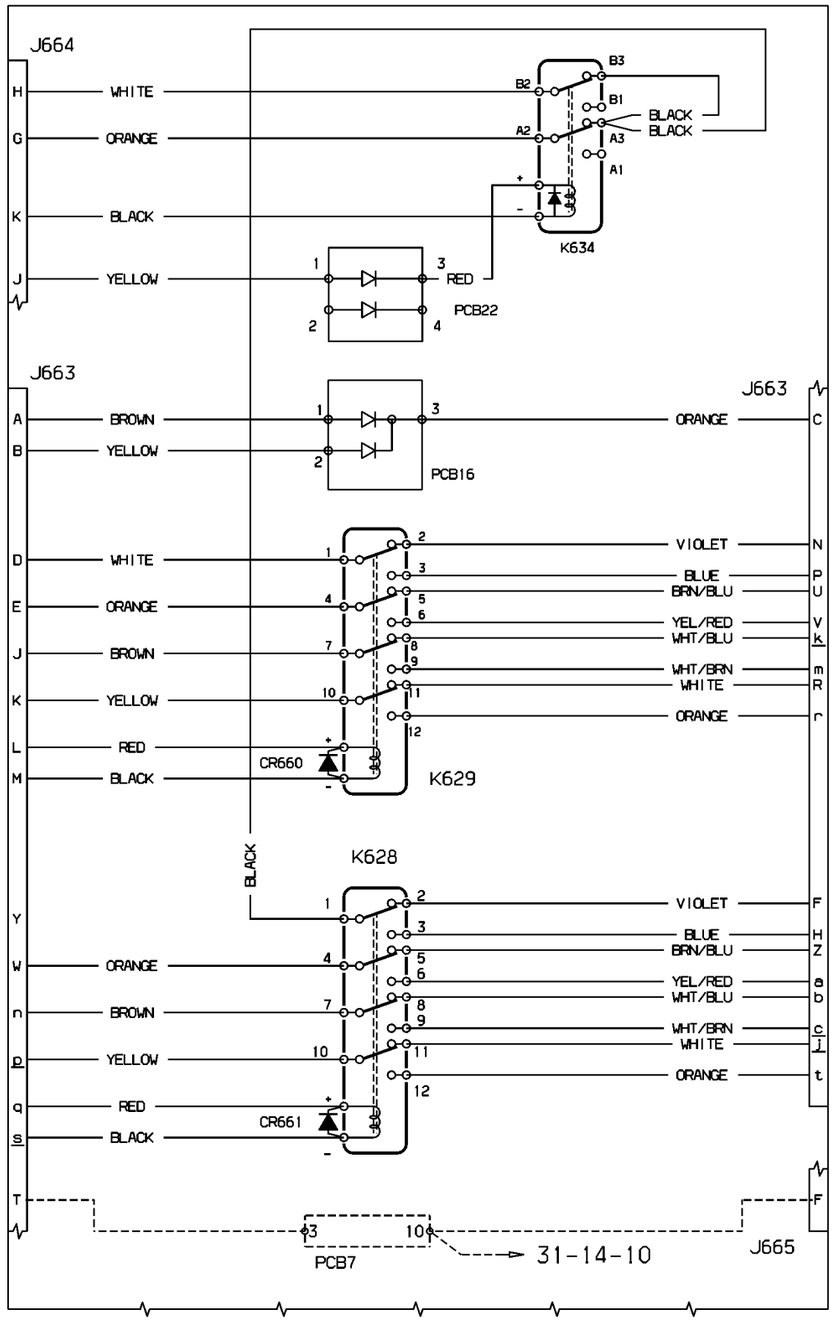


WM_341414KKB1

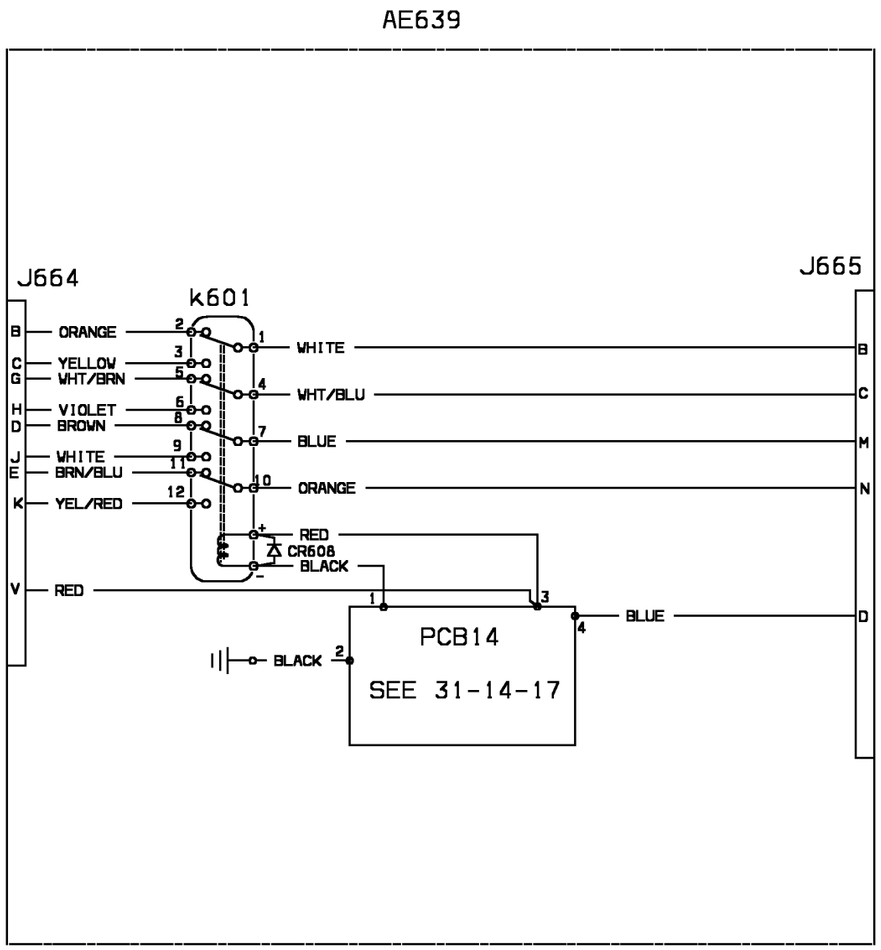


WM_311416KK

| EFFECTIVITY: | INSTRUMENT & CONTROL PANELS<br>Bias Box Kit-dual ADF (Optional) |
|---|---|

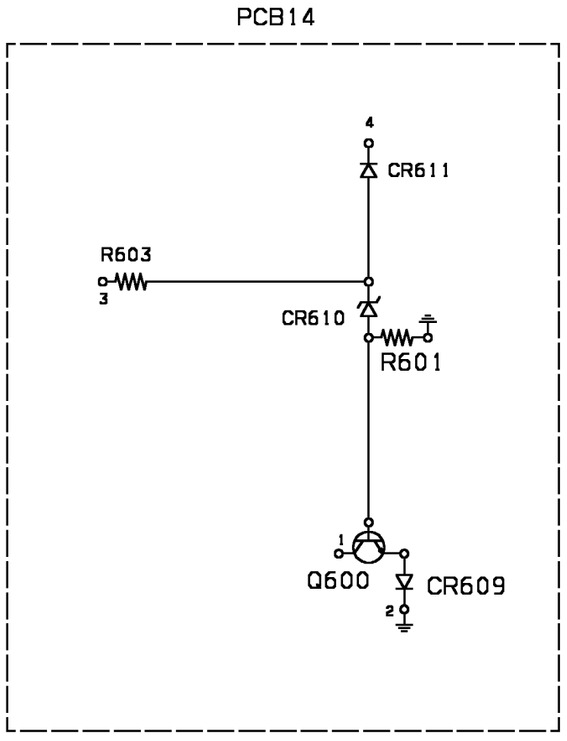


WM_311417KK

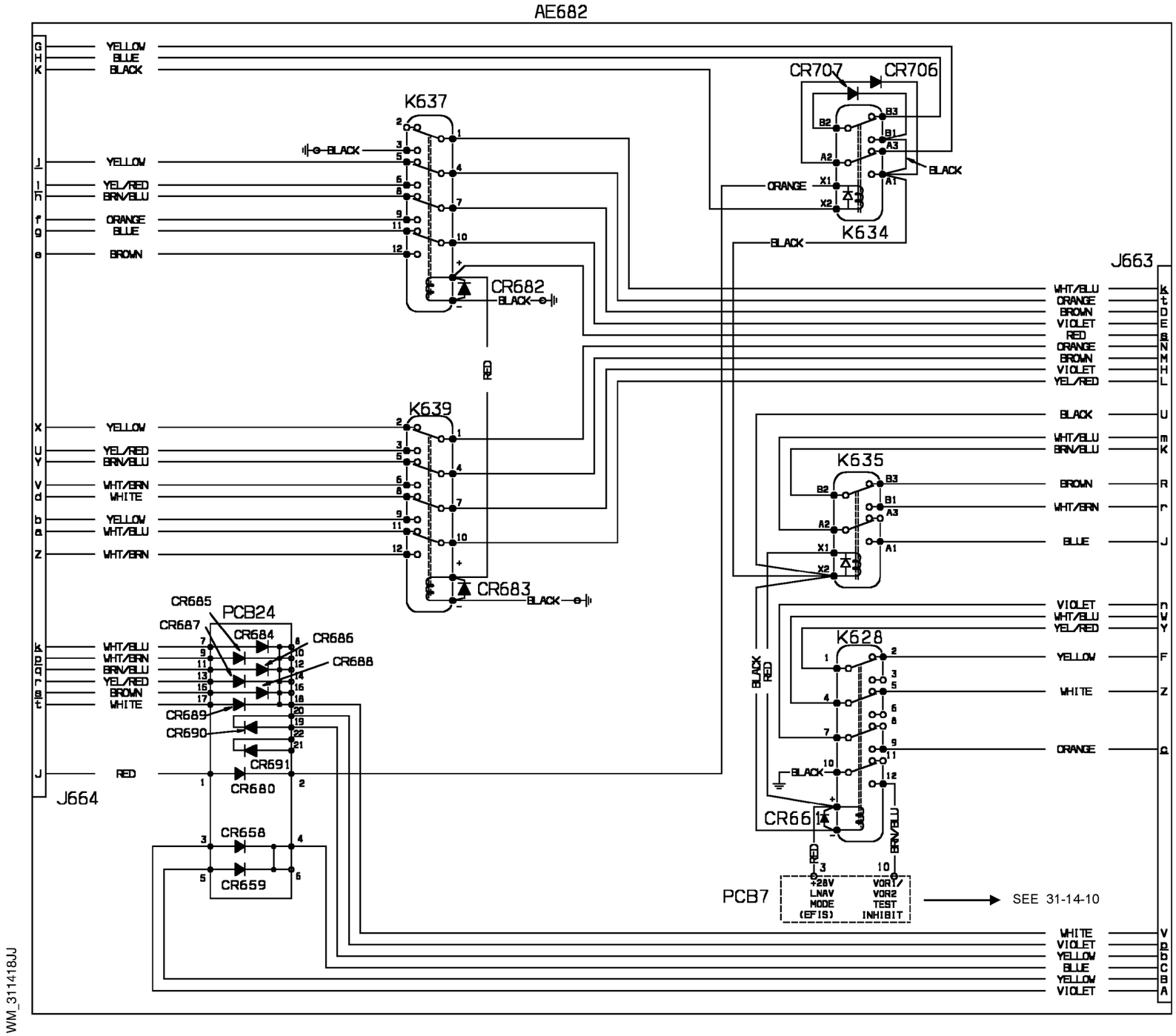
AE682
YELLOW
BLUE
BLACK
CR707
CR706
K637
YELLOW
YEL/RED
BRN/BLU
ORANGE
BLUE
BROWN
BLACK
ORANGE
BLACK
K634
J663
WHT/BLU
ORANGE
BROWN
VIOLET
RED
ORANGE
BROWN
VIOLET
YEL/RED
CR682
BLACK
RED
K639
YELLOW
YEL/RED
BRN/BLU
WHT/BRN
WHITE
YELLOW
WHT/BLU
WHT/BRN
CR683
BLACK
BLACK
WHT/BLU
BRN/BLU
K635
BROWN
WHT/BRN
BLUE
CR685
PCB24
CR687
CR684
CR686
CR688
WHT/BLU
WHT/BRN
BRN/BLU
YEL/RED
BROWN
WHITE
CR689
CR690
CR691
RED
CR680
J664
CR658
CR659
BLACK
RED
K628
YELLOW
WHITE
ORANGE
BLACK
CR661
RED
BRN/BLU
PCB7
+28V
LNAV
MODE
(EFIS)
VOR1/
VOR2
TEST
INHIBIT
SEE 31-14-10
VIOLET
WHT/BLU
YEL/RED
WHITE
VIOLET
YELLOW
BLUE
YELLOW
VIOLET
WM_311418JJ

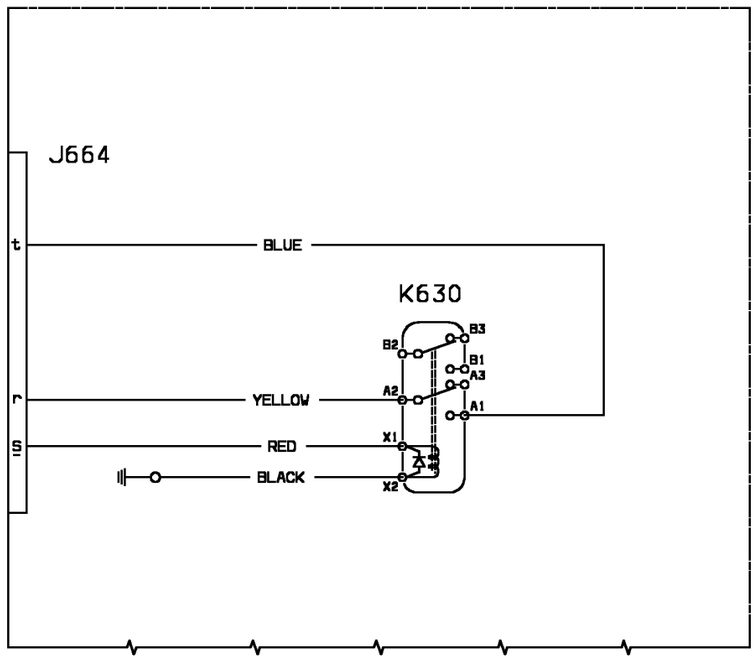


WM_311419KK

| EFFECTIVITY: | INSTRUMENT & CONTROL PANELS<br>Bias Box Kit-TDR-94 (Optional) |
|---|---|

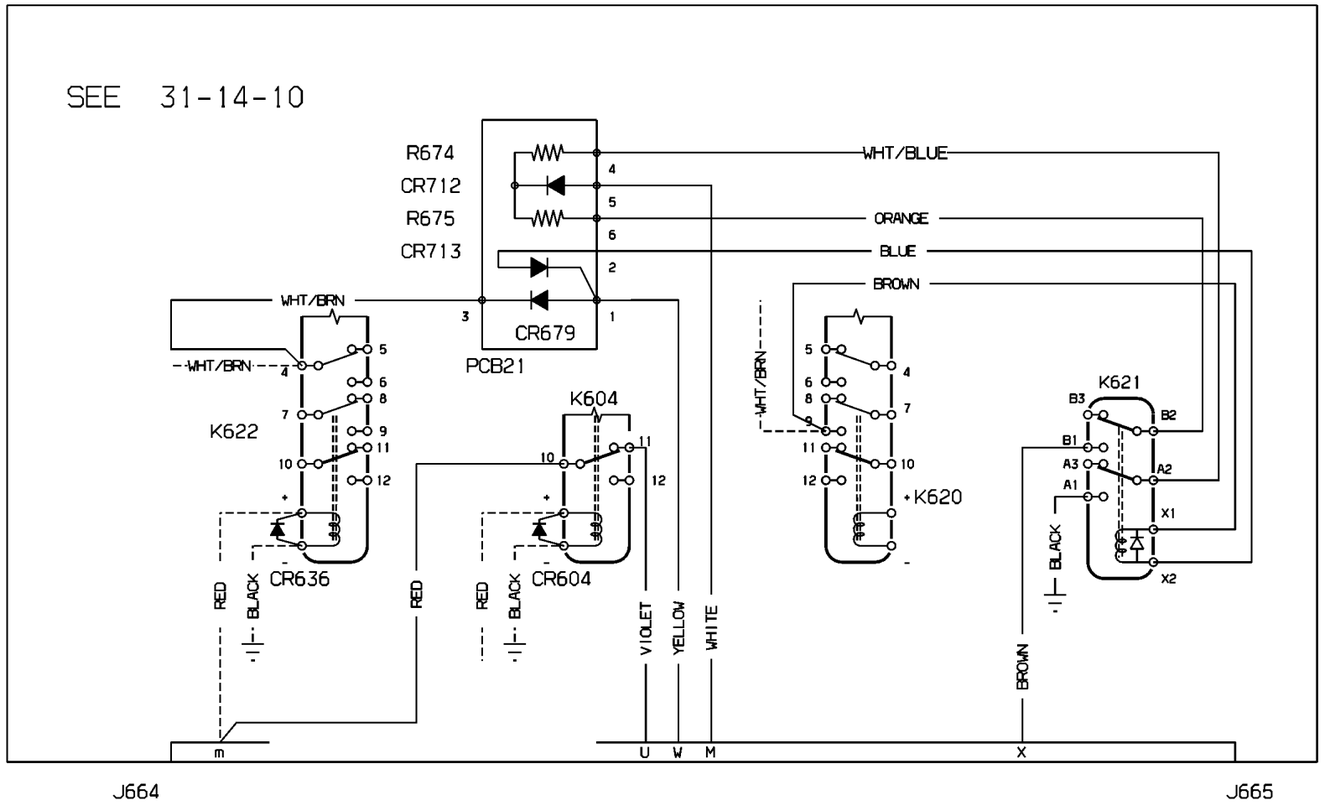


WM_311420KK1

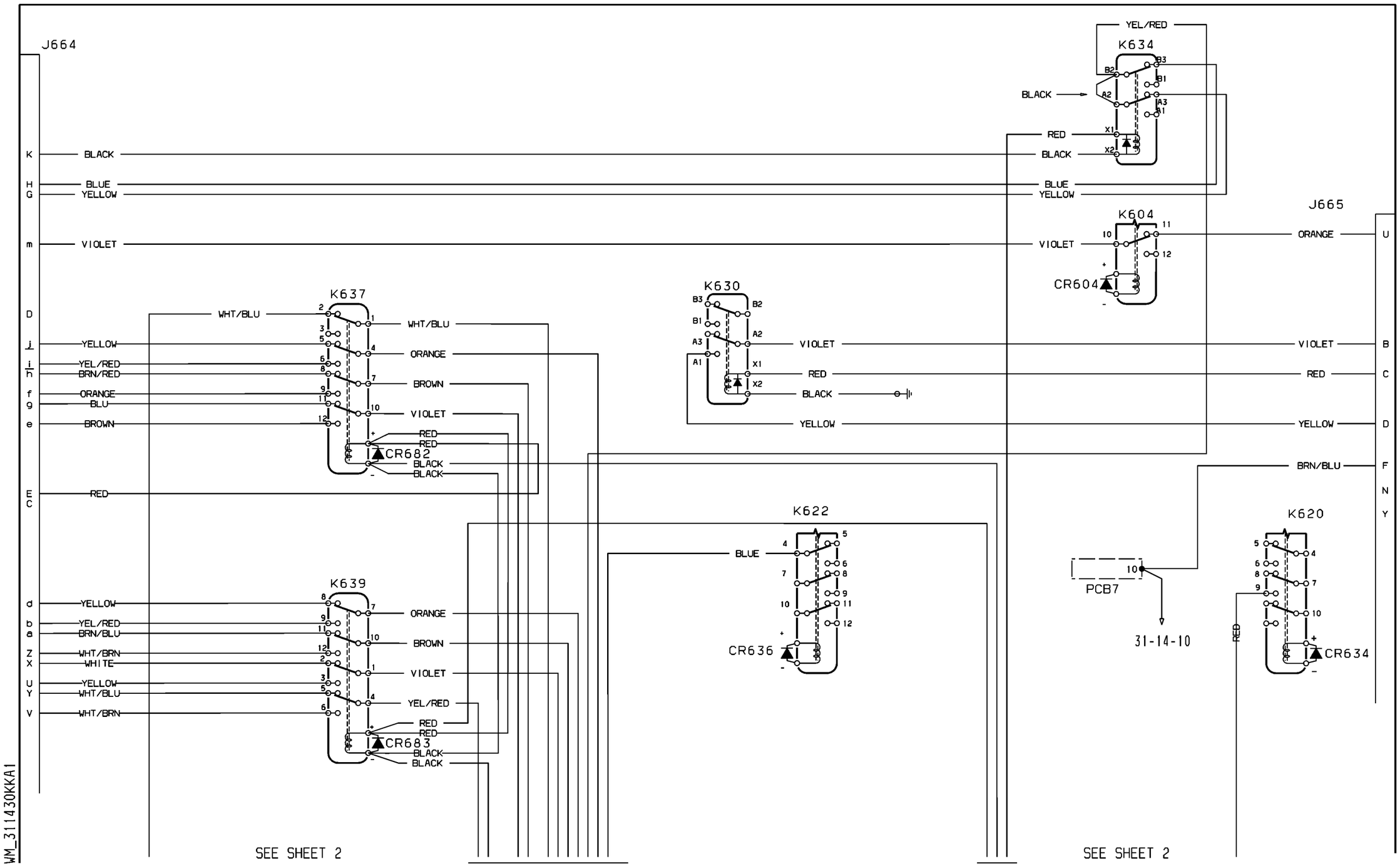


| EFFECTIVITY: | INSTRUMENT & CONTROL PANELS<br>Bias Box Kit (AE764) optional SMA |
|---|---|

**31-14-30**

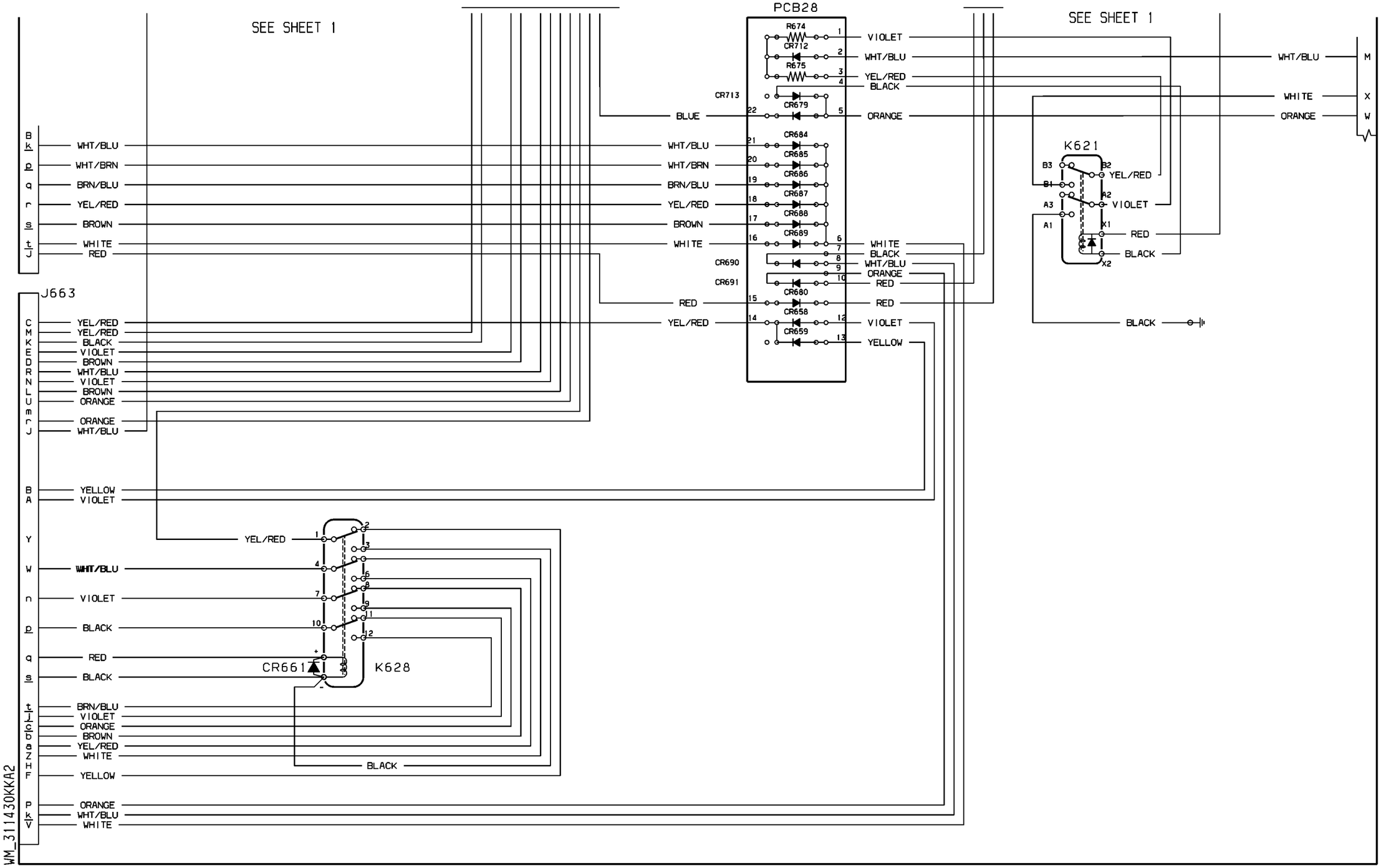


| EFFECTIVITY: | INSTRUMENT & CONTROL PANELS<br>Bias Box Kit (AE764) optional SMA |
|---|---|

**31-14-30**

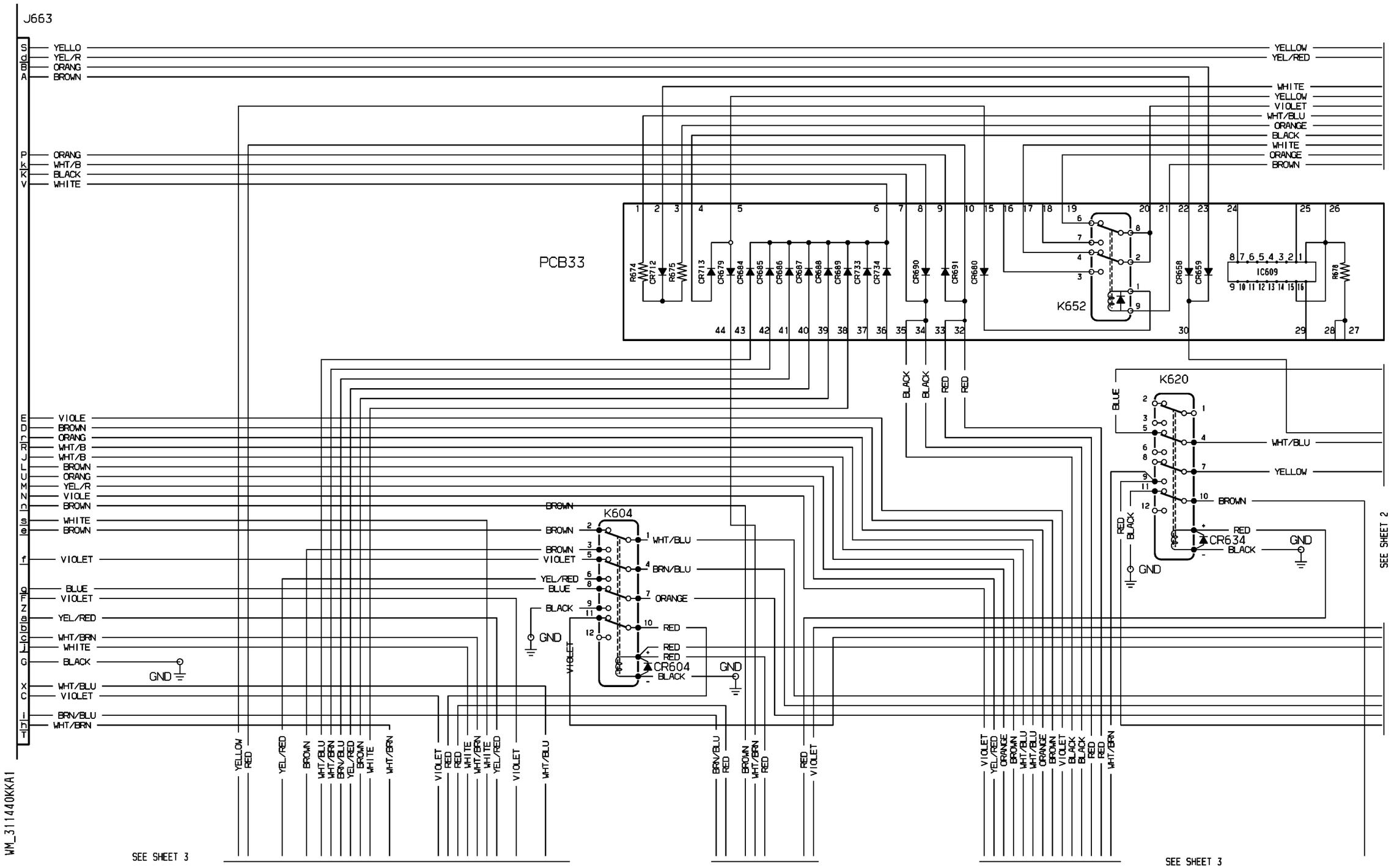


| EFFECTIVITY: | INSTRUMENT & CONTROL PANELS<br>Bias Box Kit (AE778) optional MM |
|---|---|

**31-14-40**

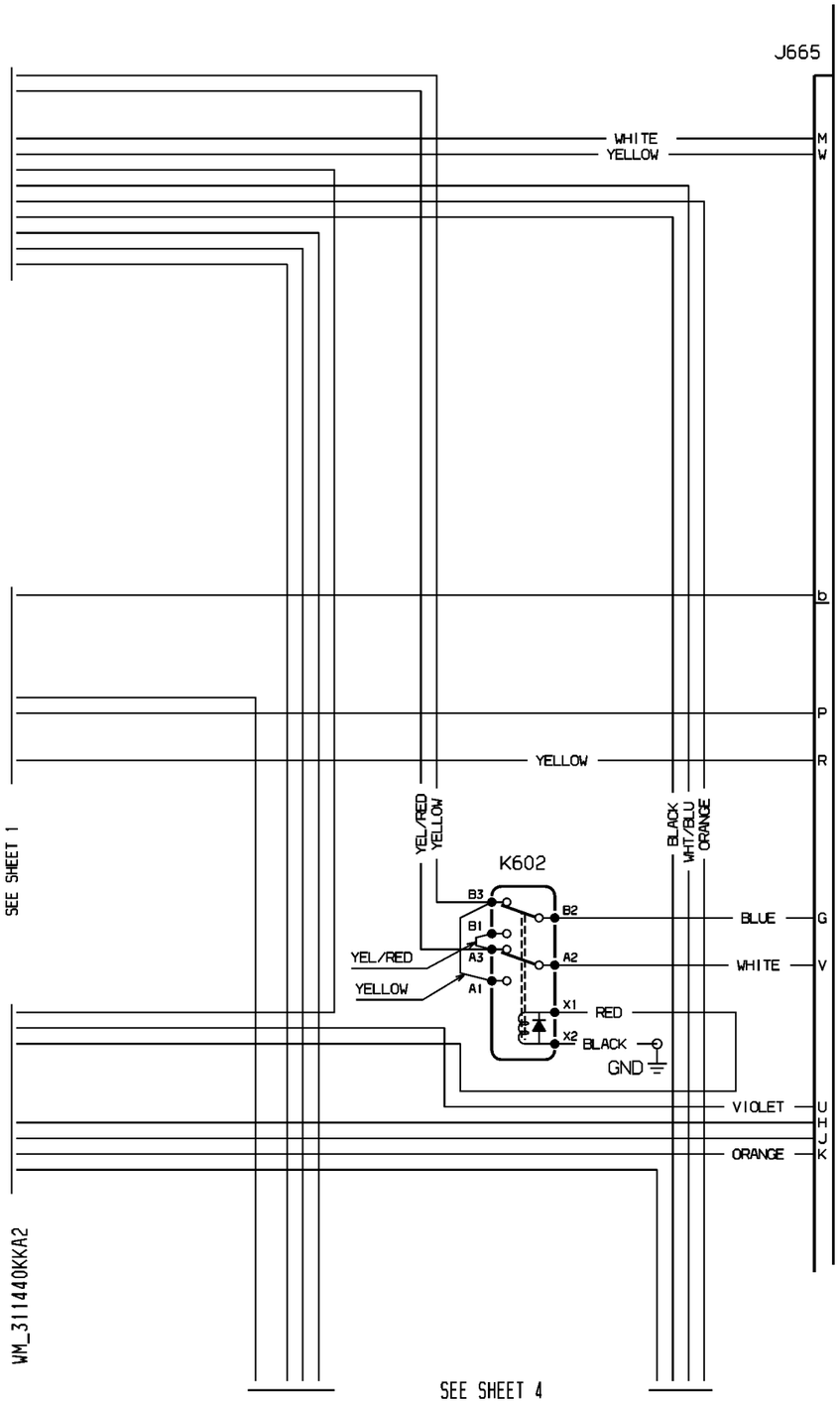


| EFFECTIVITY: | INSTRUMENT & CONTROL PANELS<br>Bias Box Kit (AE778) optional MM |
|---|---|

**31-14-40**

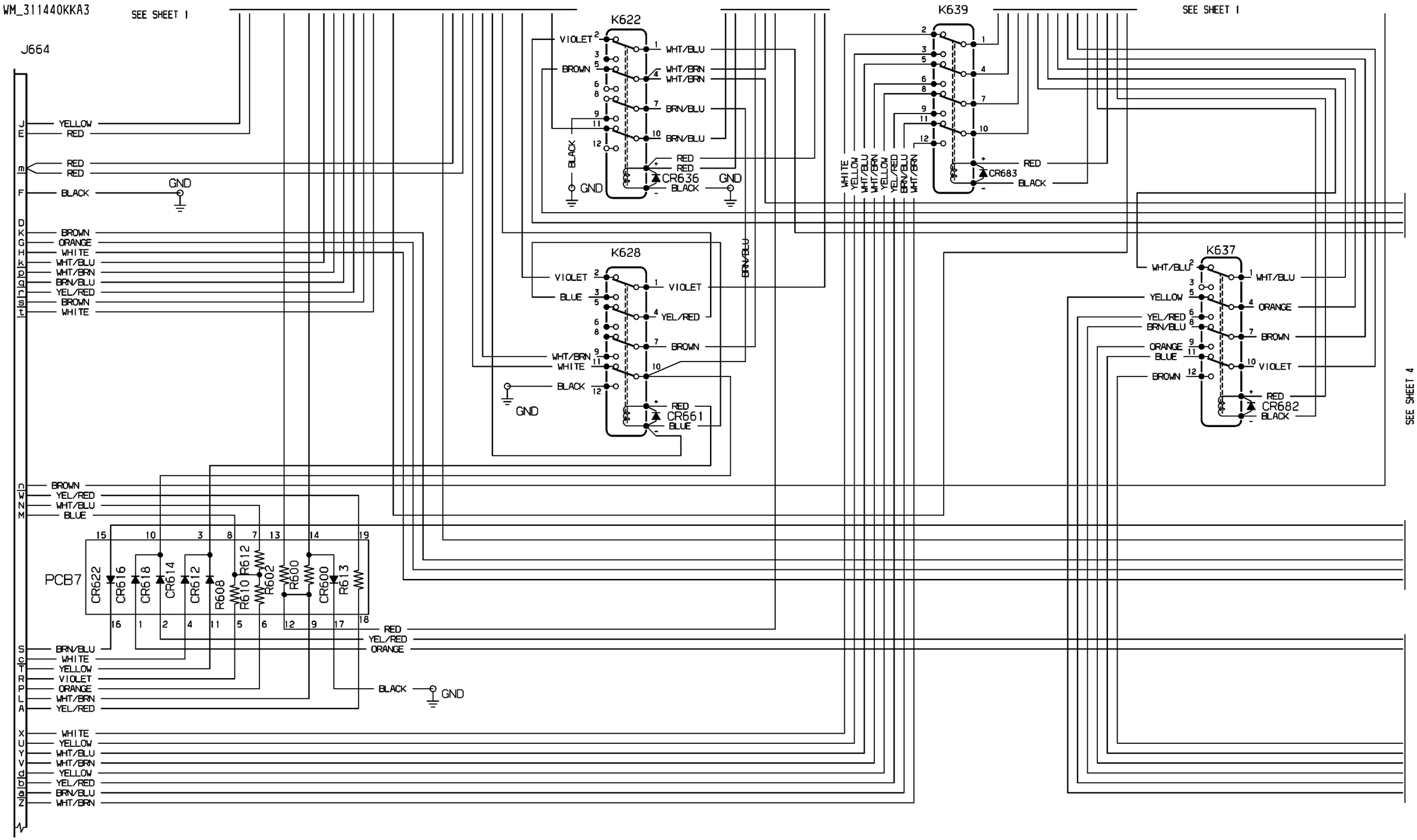


| EFFECTIVITY: | INSTRUMENT & CONTROL PANELS<br>Bias Box Kit (AE778) optional MM |
|---|---|

**31-14-40**

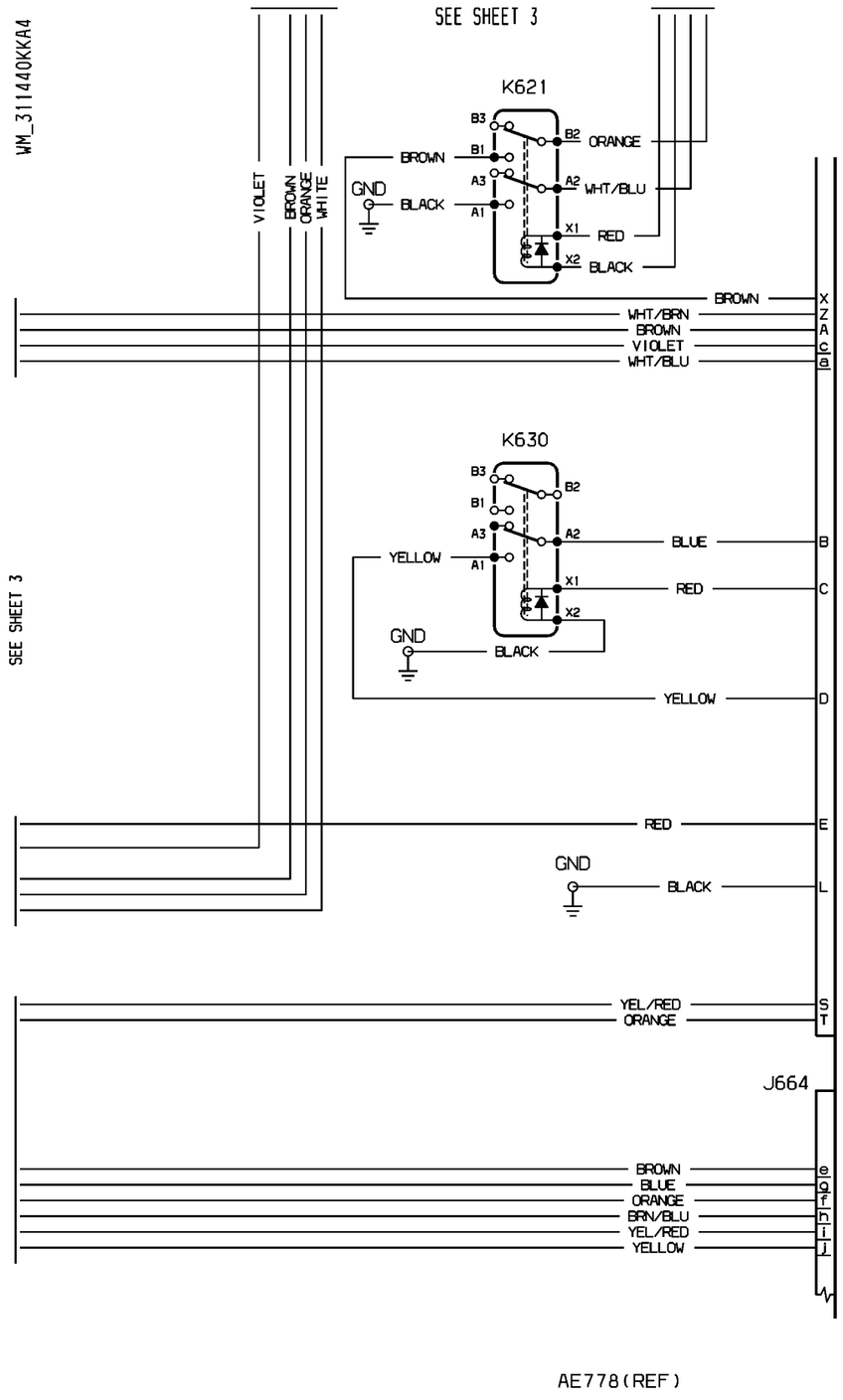


| EFFECTIVITY: | INSTRUMENT & CONTROL PANELS<br>Bias Box Kit (AE778) optional MM |
|---|---|

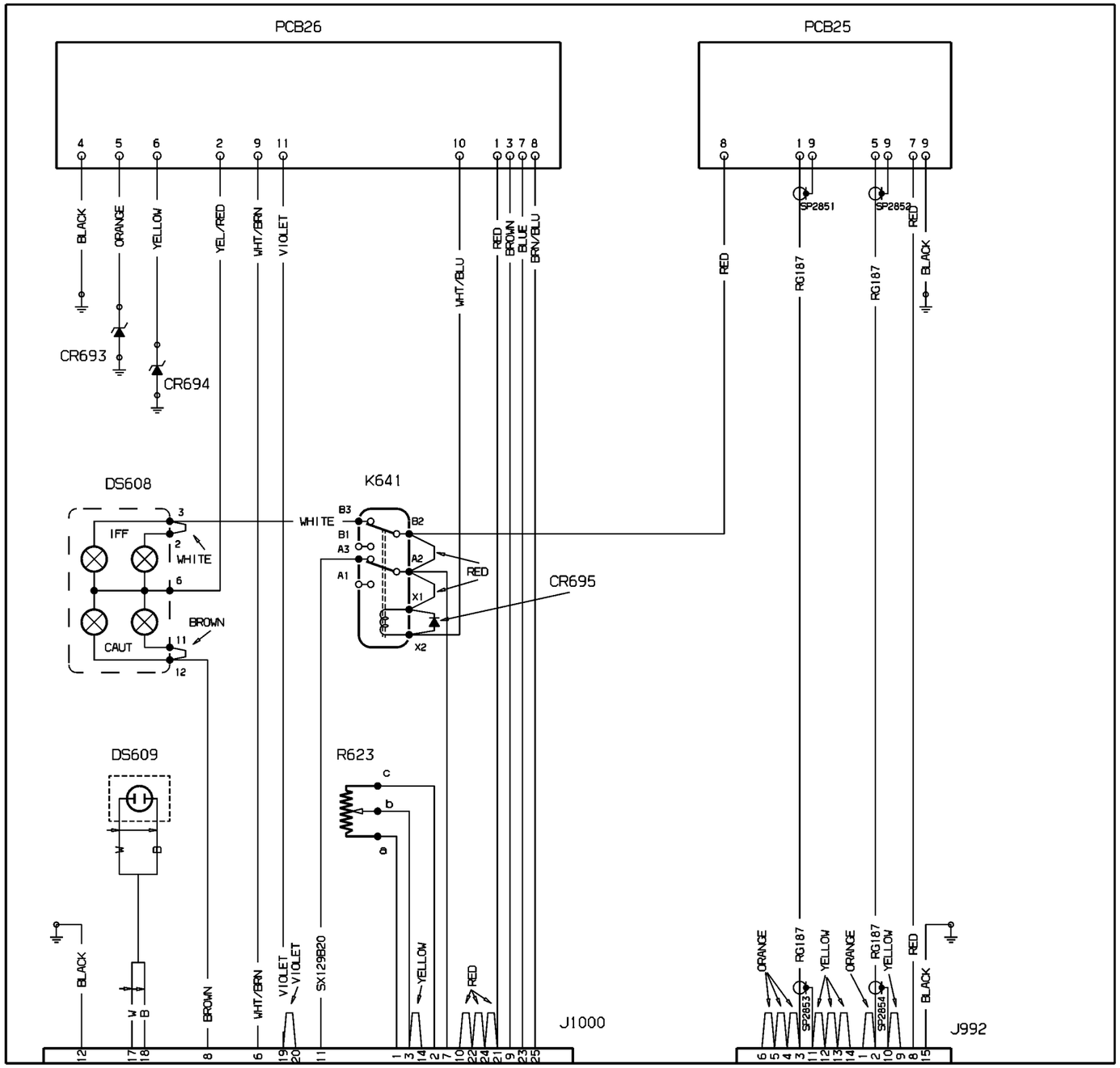


AE691

WM_311450_001_001

80k118467_1_B

| EFFECTIVITY: | INSTRUMENT & CONTROL PANELS<br>Dim/xpndr adapter (AE691) |
|---|---|

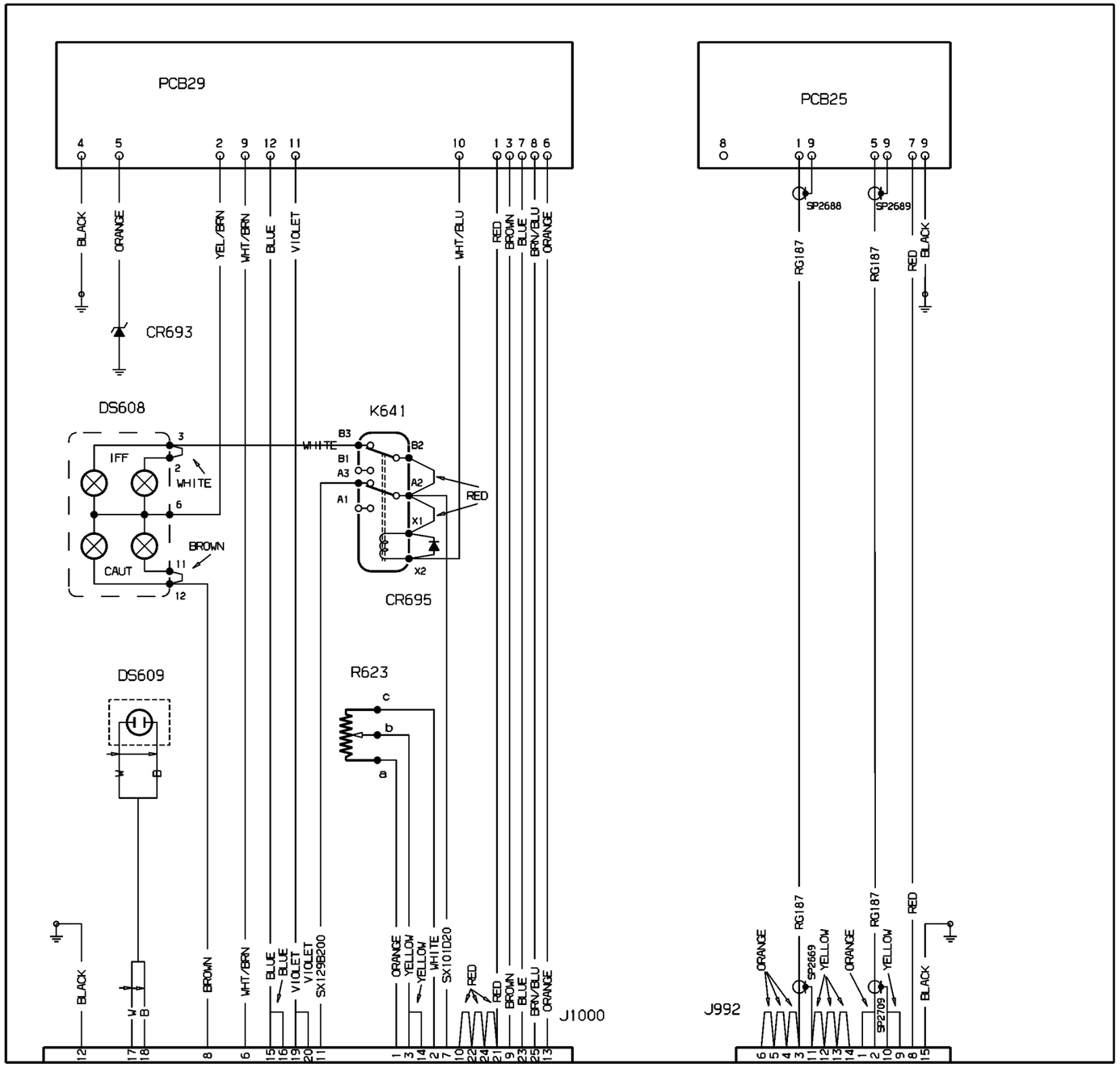


AE765

WM_311450_002_001

80k118467_2_B

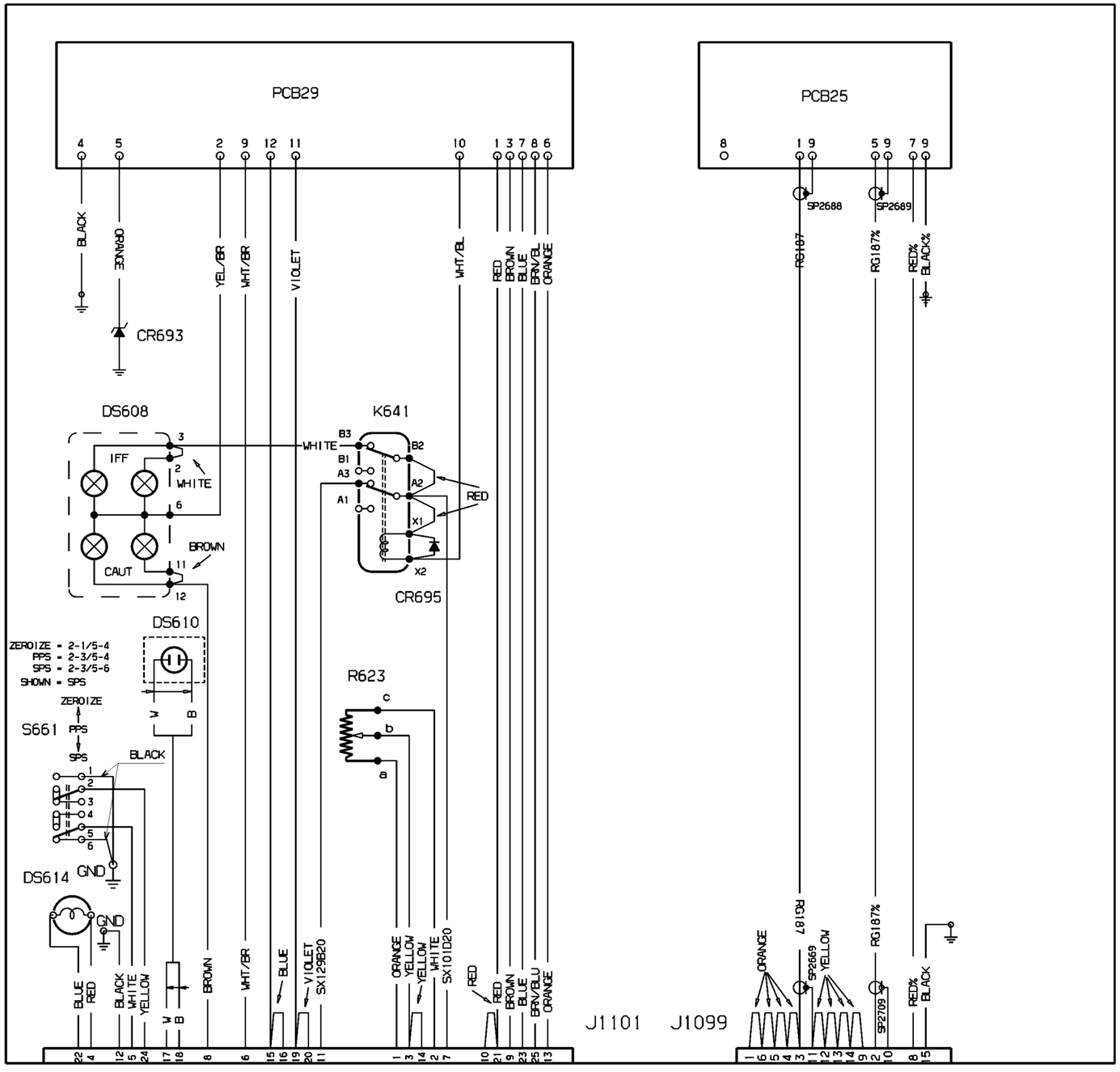


AE779

WM_311450_003_001

80k118749_1/A

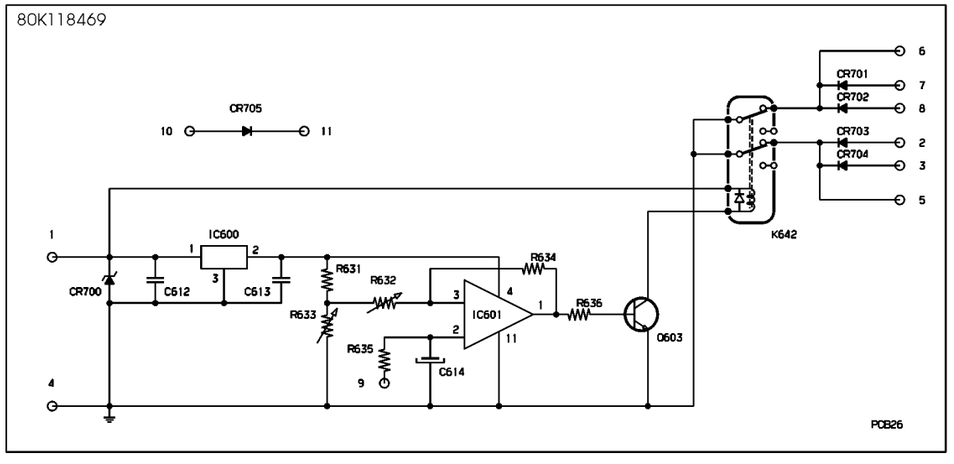


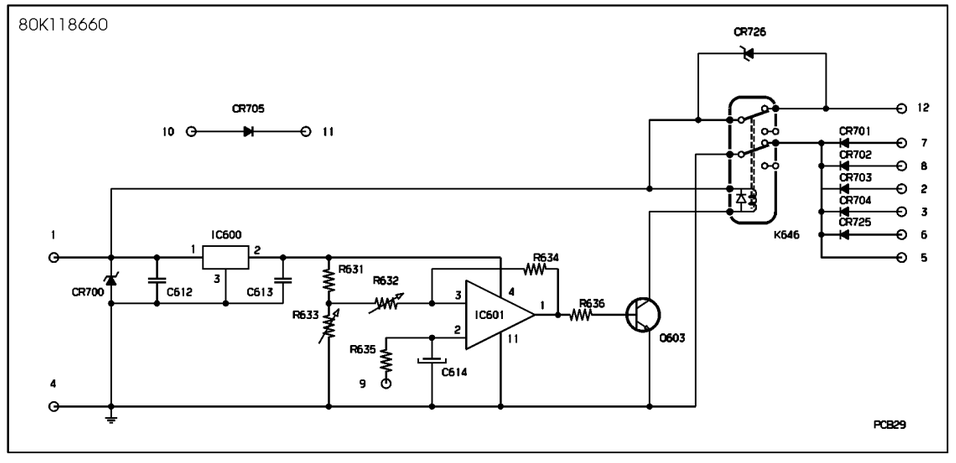


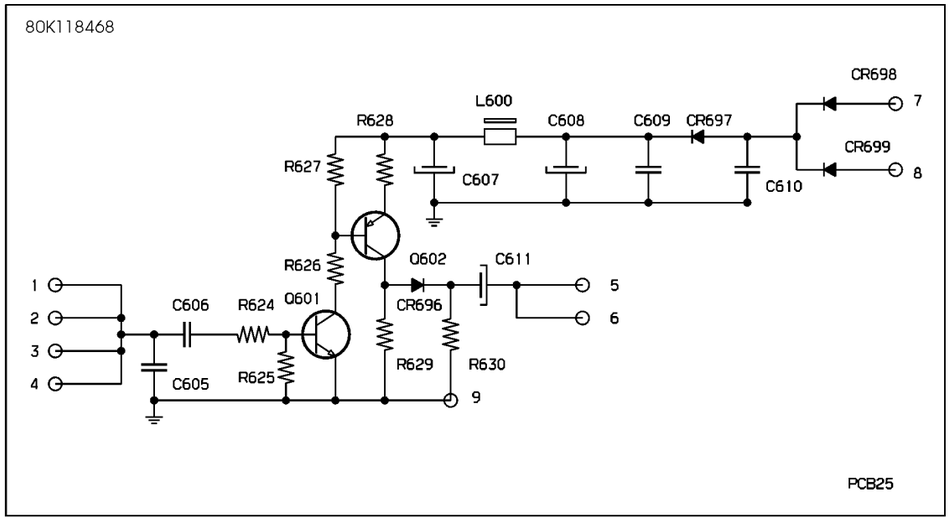


WM_311451_001_001

| EFFECTIVITY: | INSTRUMENT & CONTROL PANELS<br>DIM/XPNDR PCB26 PCB29 PCB25 |
|---|---|

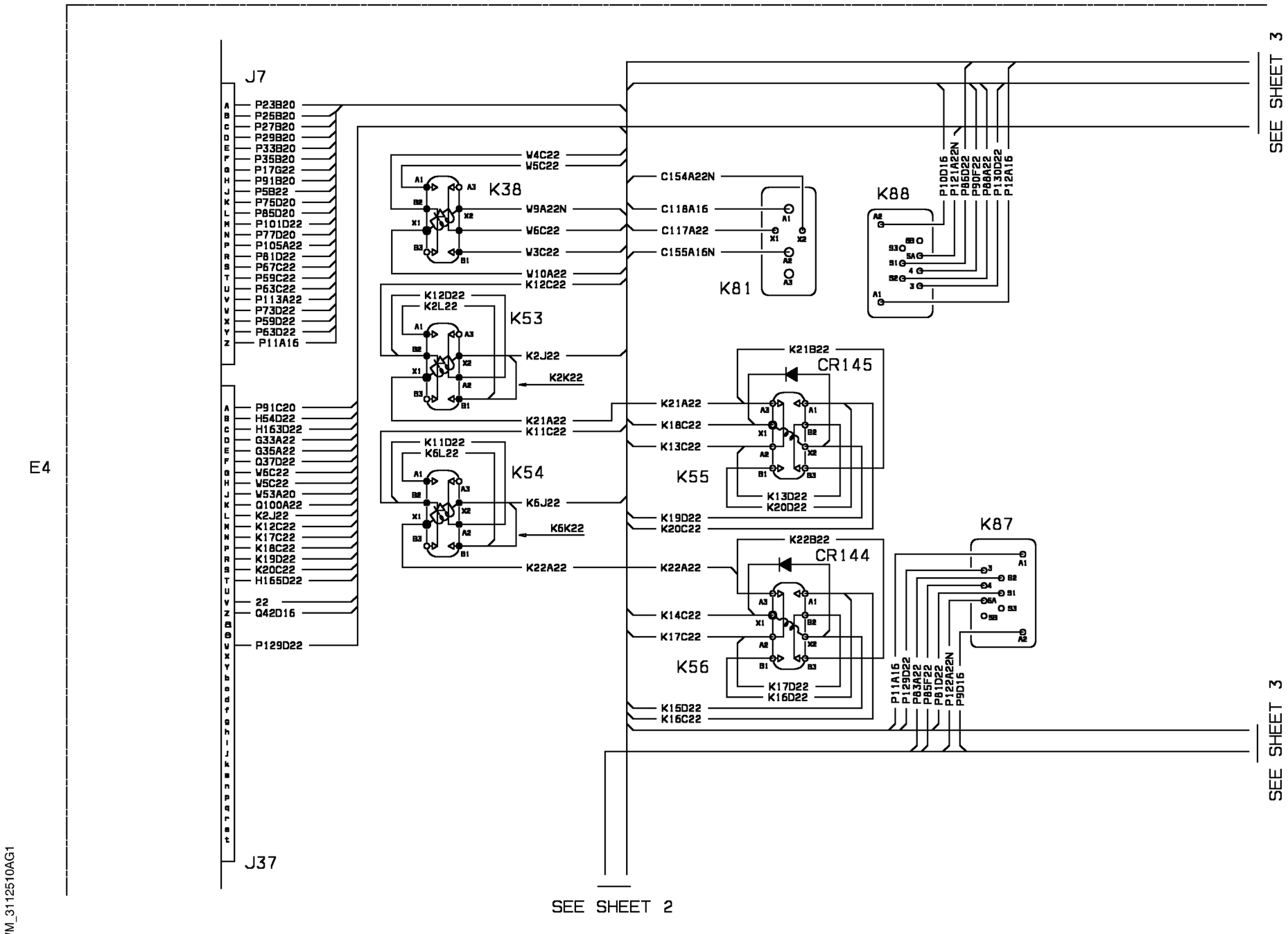


WM_3112510AG1

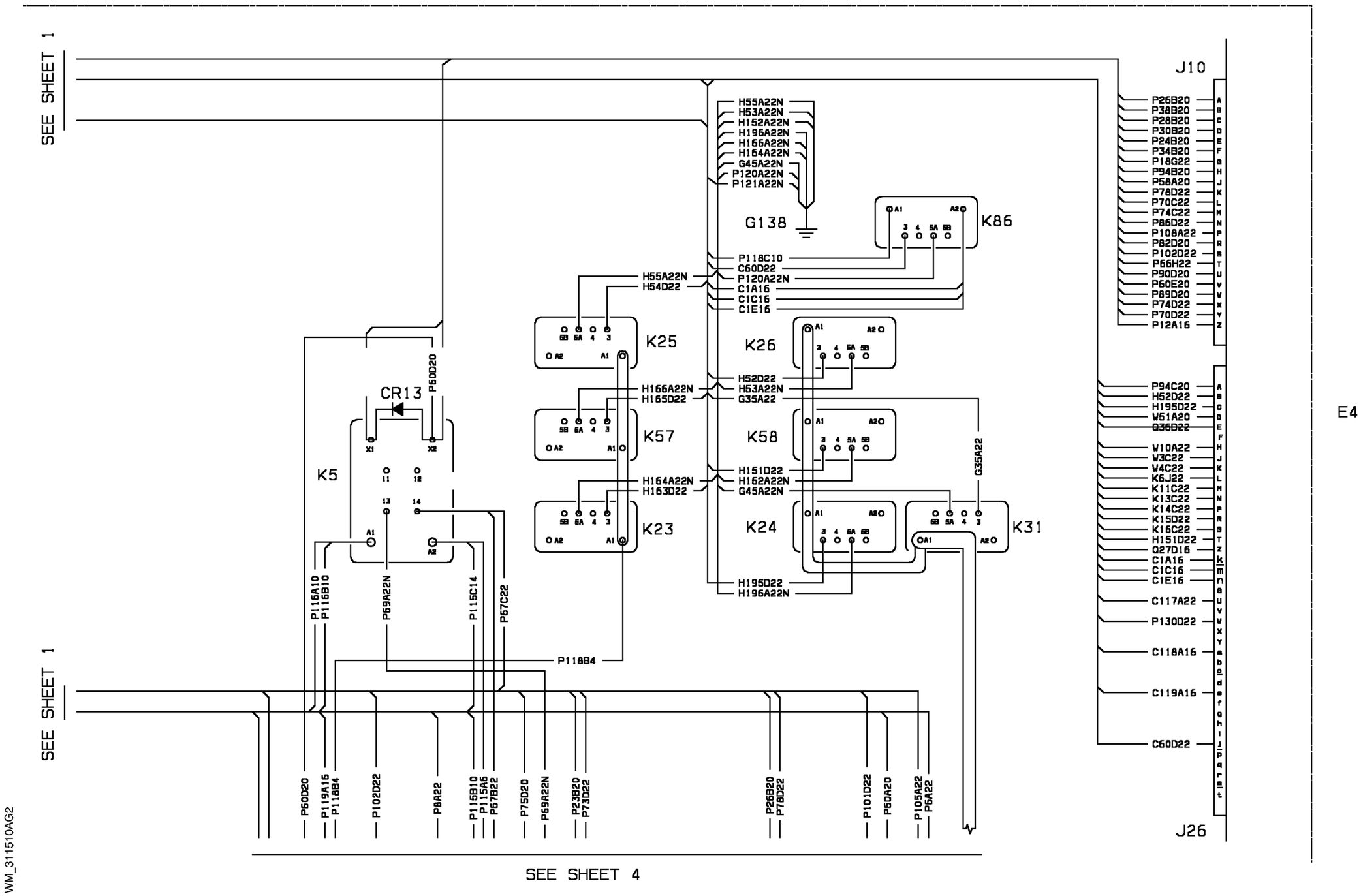


WM_311510AG2

| EFFECTIVITY: 1004-1009 | INSTRUMENT & CONTROL PANELS<br>Main Junction Box |
|---|---|

**31-15-10**

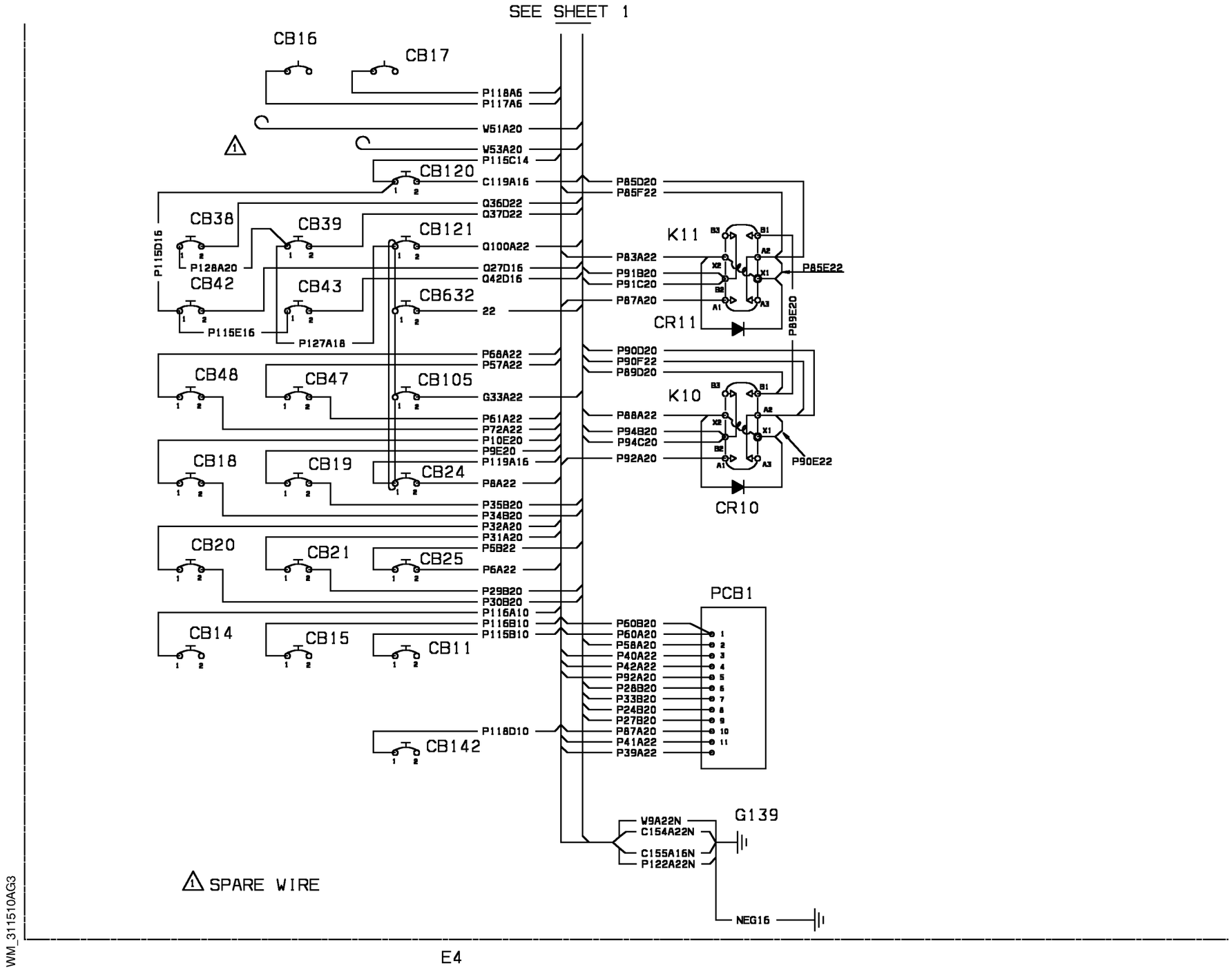


| EFFECTIVITY: | INSTRUMENT & CONTROL PANELS |
|---|---|
| 1004-1009 | Main Junction Box |

**31-15-10**

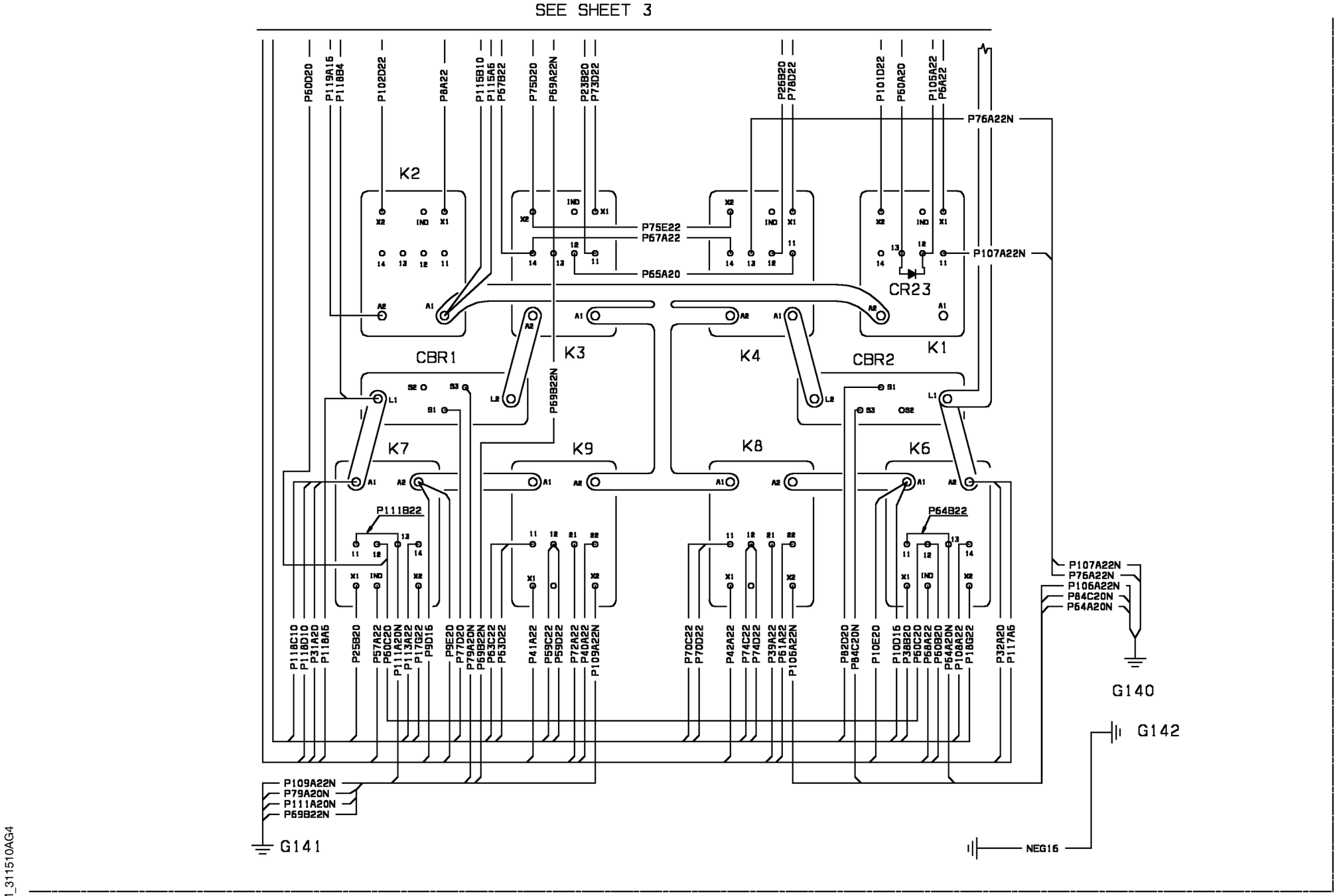


WM_311510AG4

| EFFECTIVITY: | INSTRUMENT & CONTROL PANELS |
|---|---|
| 1004-1009 | Main Junction Box |

**31-15-10**

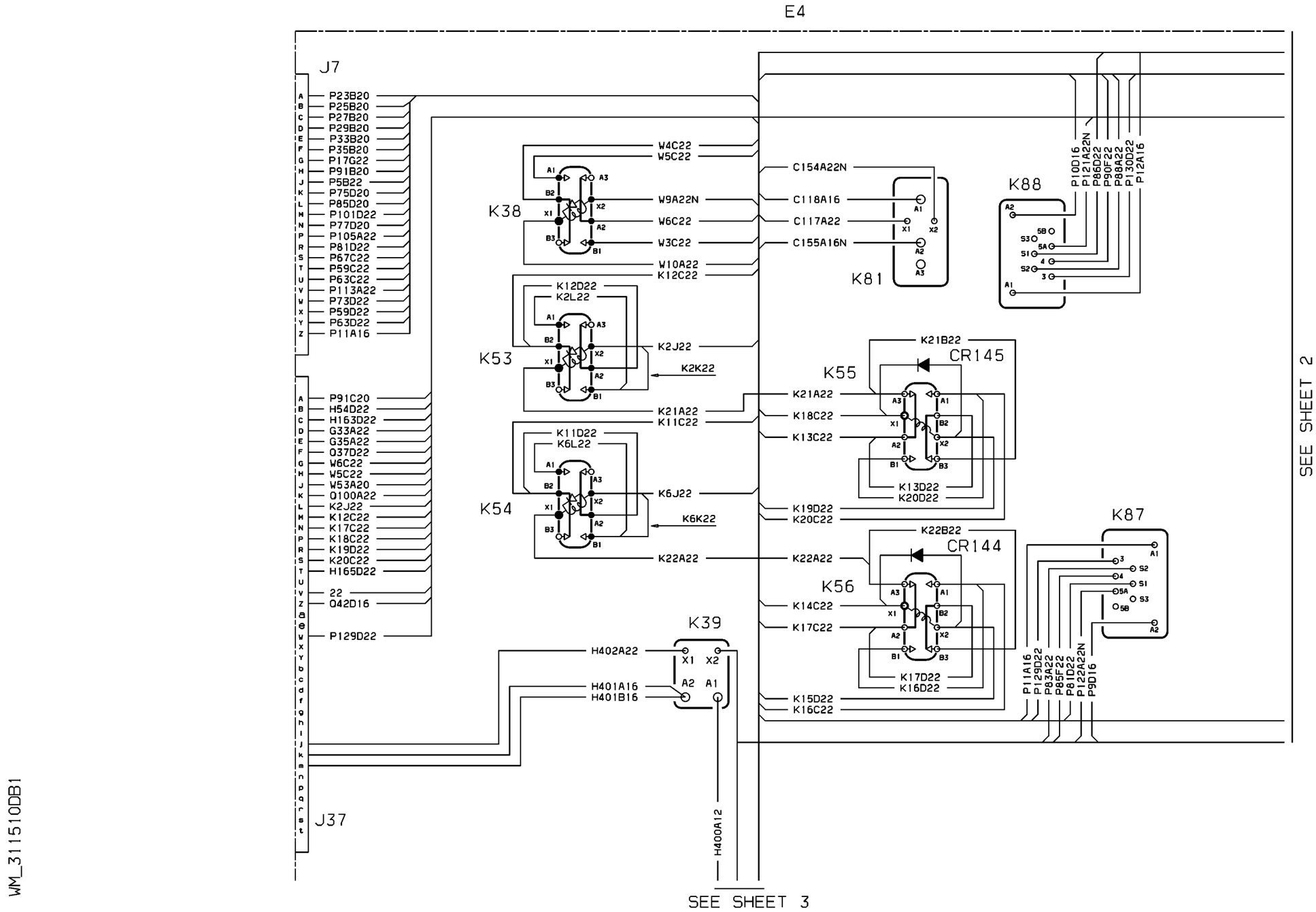


WM_311510DB1

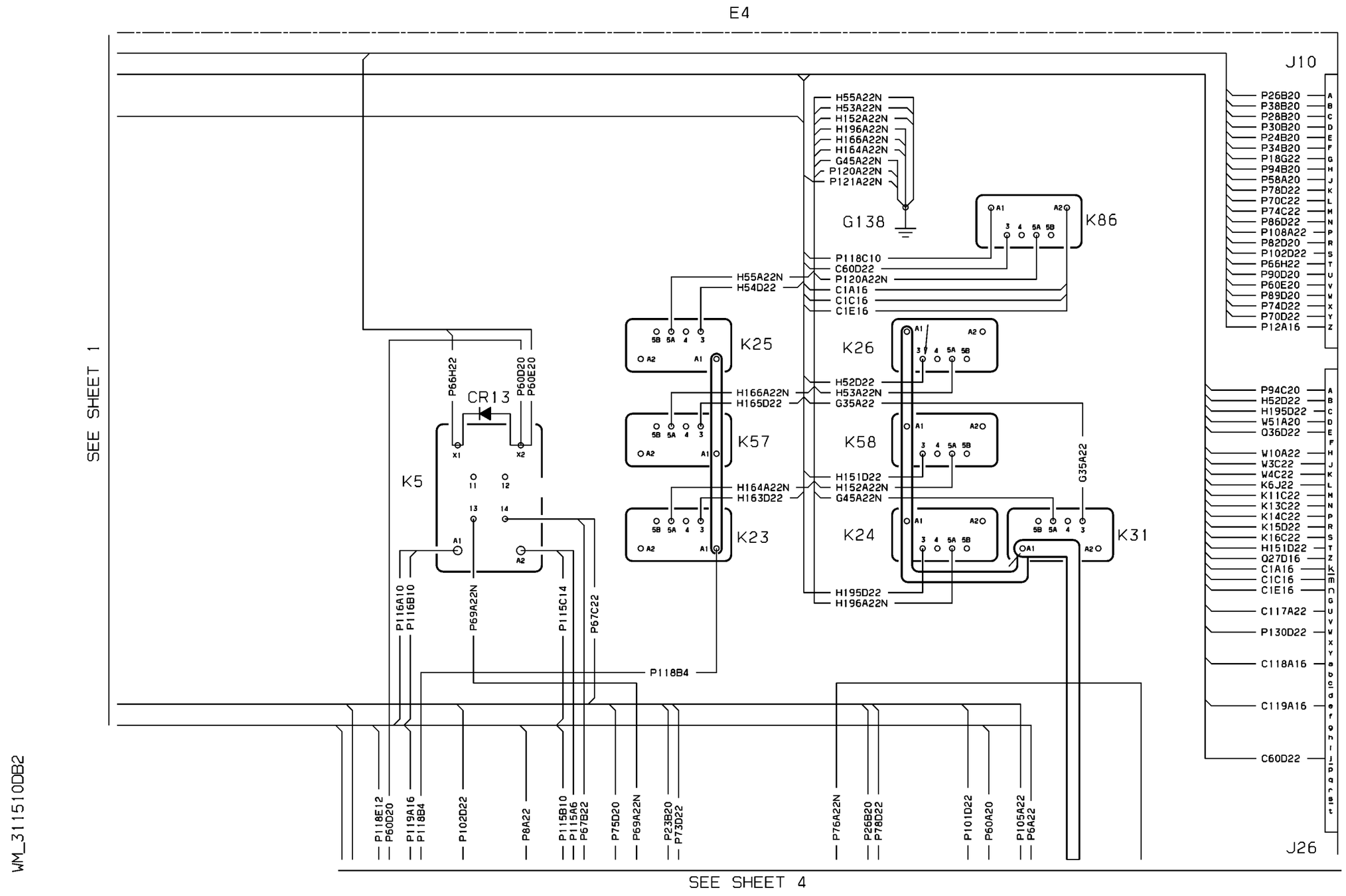


| EFFECTIVITY: | INSTRUMENT & CONTROL PANELS |
|---|---|
| 1010-1033 | Main Junction Box |

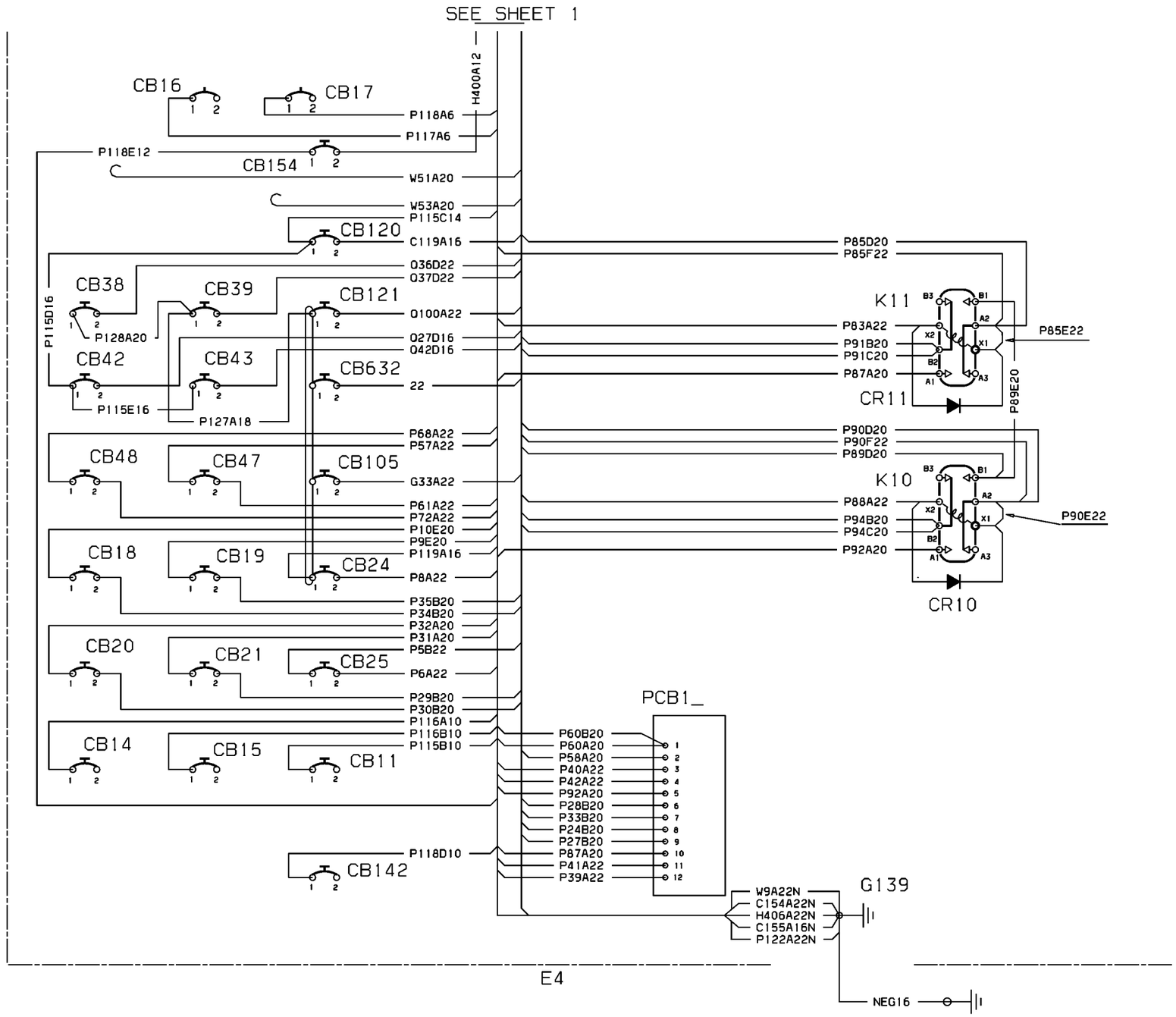
SEE SHEET 1
H400A12
CB16
CB17
P118A6
P117A6
P118E12
CB154
W51A20
W53A20
P115C14
CB120
C119A16
Q36D22
Q37D22
CB38
CB39
CB121
Q100A22
P115D16
P128A20
Q27D16
Q42D16
CB42
CB43
CB632
22
P115E16
P127A18
P68A22
P57A22
CB48
CB47
CB105
G33A22
P61A22
P72A22
P10E20
P9E20
CB18
CB19
CB24
P119A16
P8A22
P35B20
P34B20
P32A20
P31A20
CB20
CB21
CB25
P5B22
P6A22
P29B20
P30B20
P116A10
P116B10
P115B10
CB14
CB15
CB11
P118D10
CB142
P85D20
P85F22
K11
P83A22
P91B20
P91C20
P87A20
P85E22
CR11
P89E20
P90D20
P90F22
P89D20
K10
P88A22
P94B20
P94C20
P92A20
P90E22
CR10
PCB1_
P60B20
P60A20
P58A20
P40A22
P42A22
P92A20
P28B20
P33B20
P24B20
P27B20
P87A20
P41A22
P39A22
W9A22N
C154A22N
H406A22N
C155A16N
P122A22N
G139
NEG16
E4
WM_311510DB3

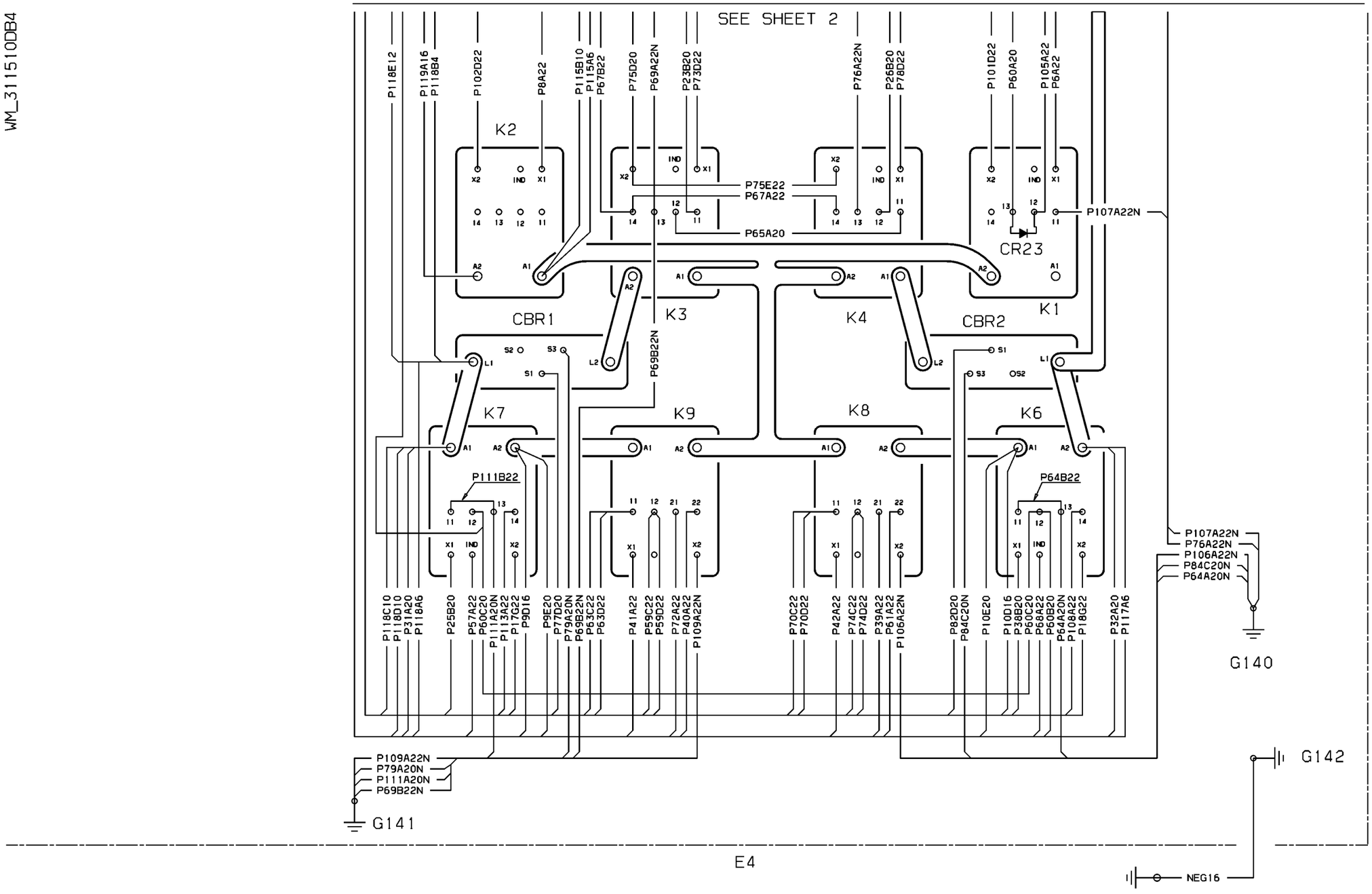
SEE SHEET 2
P118E12
P119A16
P118B4
P102D22
P8A22
P115B10
P115A6
P67B22
P75D20
P69A22N
P23B20
P73D22
P76A22N
P26B20
P78D22
P101D22
P60A20
P105A22
P6A22
K2
P75E22
P67A22
P65A20
P107A22N
CR23
CBR1
K3
K4
CBR2
K1
P69B22N
K7
K9
K8
K6
P111B22
P64B22
P107A22N
P76A22N
P106A22N
P84C20N
P64A20N
G140
P118C10
P118D10
P31A20
P118A6
P25B20
P57A22
P60C20
P111A20N
P113A22
P17G22
P9D16
P9E20
P77D20
P79A20N
P69B22N
P63C22
P63D22
P41A22
P59C22
P59D22
P72A22
P40A22
P109A22N
P70C22
P70D22
P42A22
P74C22
P74D22
P39A22
P61A22
P106A22N
P82D20
P84C20N
P10E20
P10D16
P38B20
P60C20
P68A22
P60B20
P64A20N
P108A22
P18G22
P32A20
P117A6
P109A22N
P79A20N
P111A20N
P69B22N
G141
G142
NEG16
E4

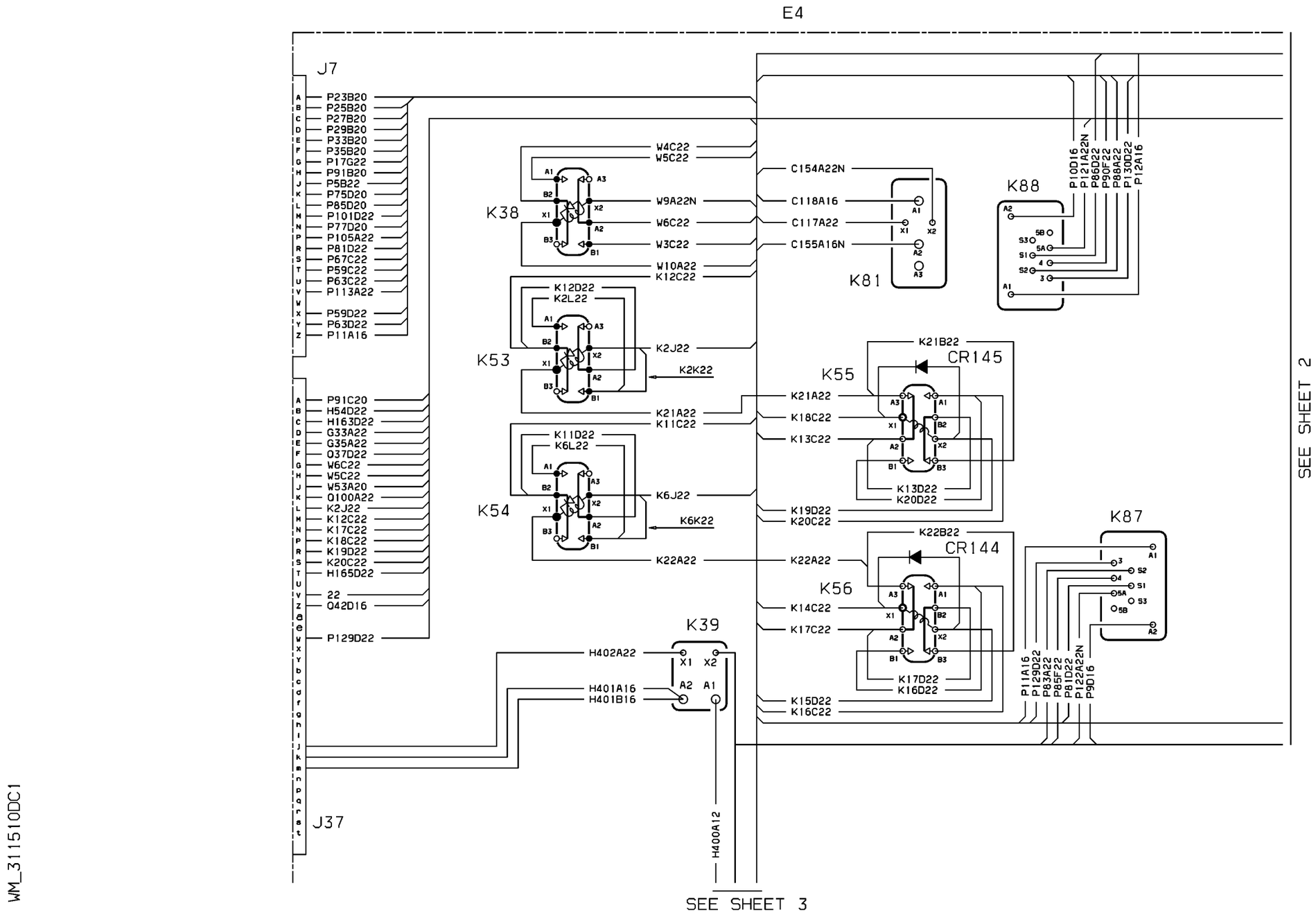
E4
J7
P23B20
P25B20
P27B20
P29B20
P33B20
P35B20
P17G22
P91B20
P5B22
P75D20
P85D20
P101D22
P77D20
P105A22
P81D22
P67C22
P59C22
P63C22
P113A22
P59D22
P63D22
P11A16
P91C20
H54D22
H163D22
G33A22
G35A22
O37D22
W6C22
W5C22
W53A20
Q100A22
K2J22
K12C22
K17C22
K18C22
K19D22
K20C22
H165D22
22
Q42D16
P129D22
K38
K53
K54
K39
K81
K88
K55
K56
K87
CR145
CR144
W4C22
W5C22
W9A22N
W6C22
W3C22
W10A22
K12C22
K12D22
K2L22
K2J22
K2K22
K21A22
K11C22
K11D22
K6L22
K6J22
K6K22
K22A22
H402A22
H401A16
H401B16
H400A12
C154A22N
C118A16
C117A22
C155A16N
K21B22
K18C22
K13C22
K13D22
K20D22
K19D22
K20C22
K22B22
K14C22
K17C22
K17D22
K16D22
K15D22
K16C22
P10D16
P121A22N
P86D22
P90F22
P88A22
P130D22
P12A16
P11A16
P129D22
P83A22
P85F22
P81D22
P122A22N
P9D16
J37
SEE SHEET 2
SEE SHEET 3
WM_311510DC1

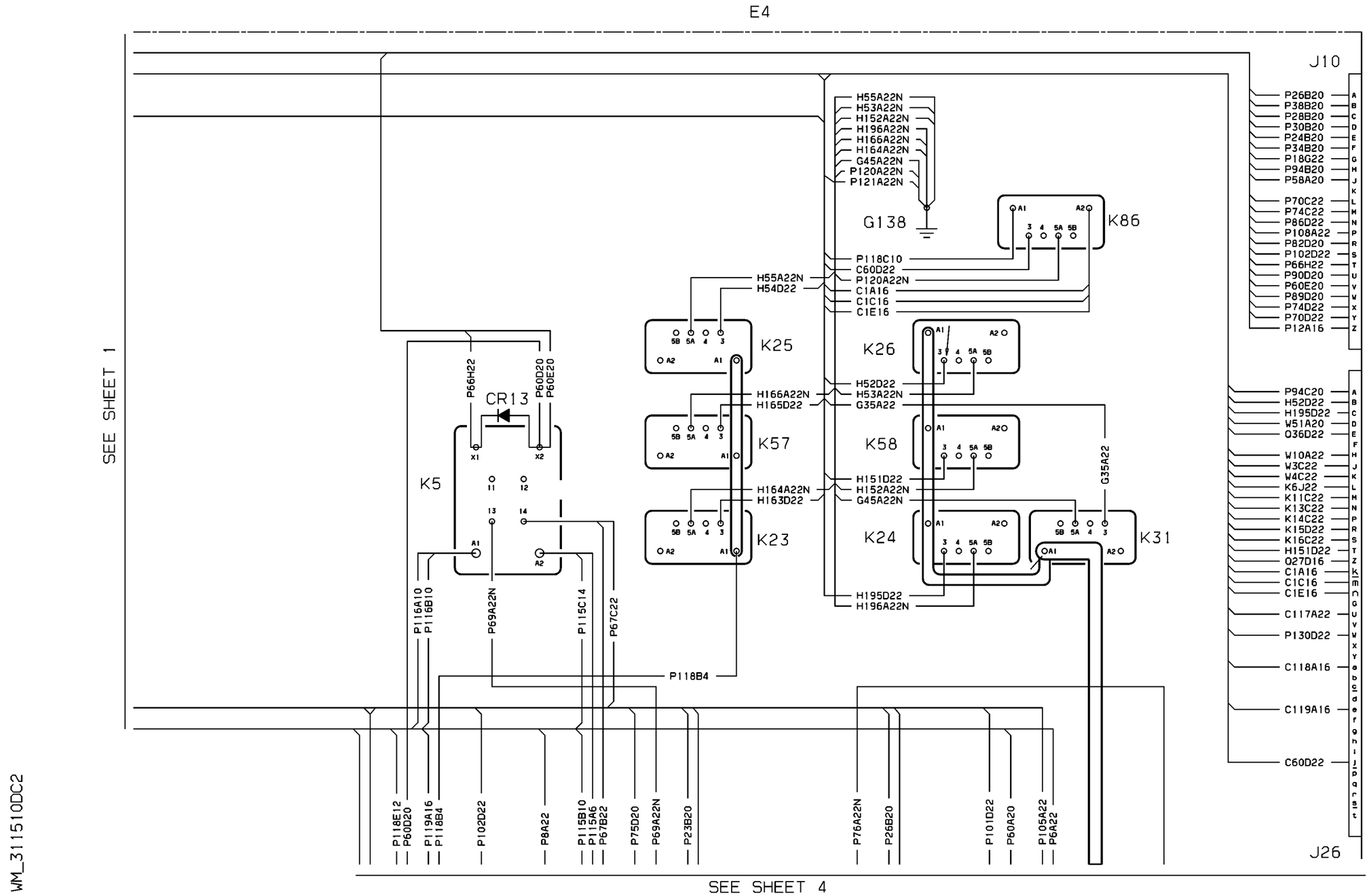


| EFFECTIVITY: | INSTRUMENT & CONTROL PANELS |
|---|---|
| 1034-1040,1043,1045 | Main Junction Box |

WM_311510DC3

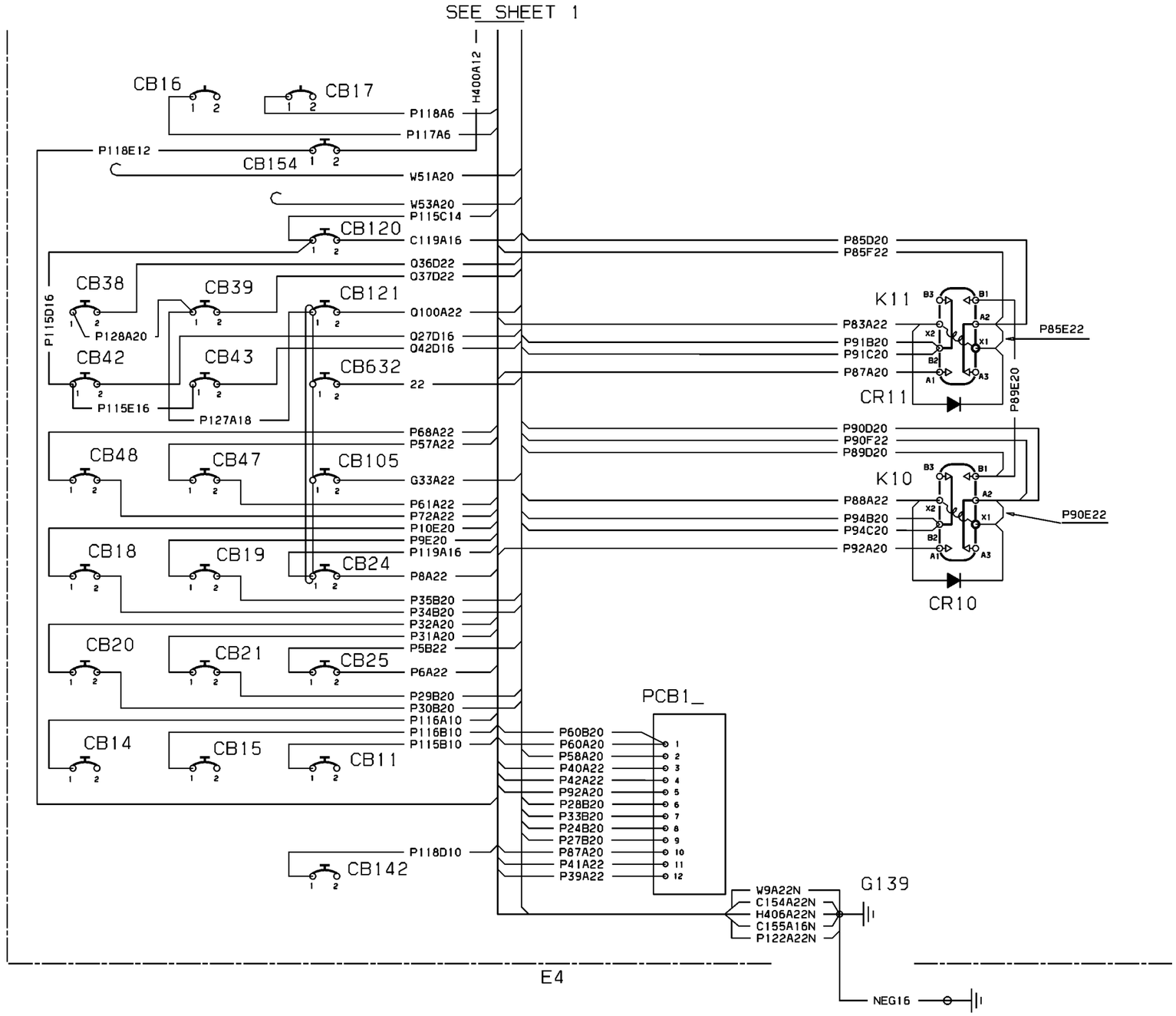

WM_311510DC4

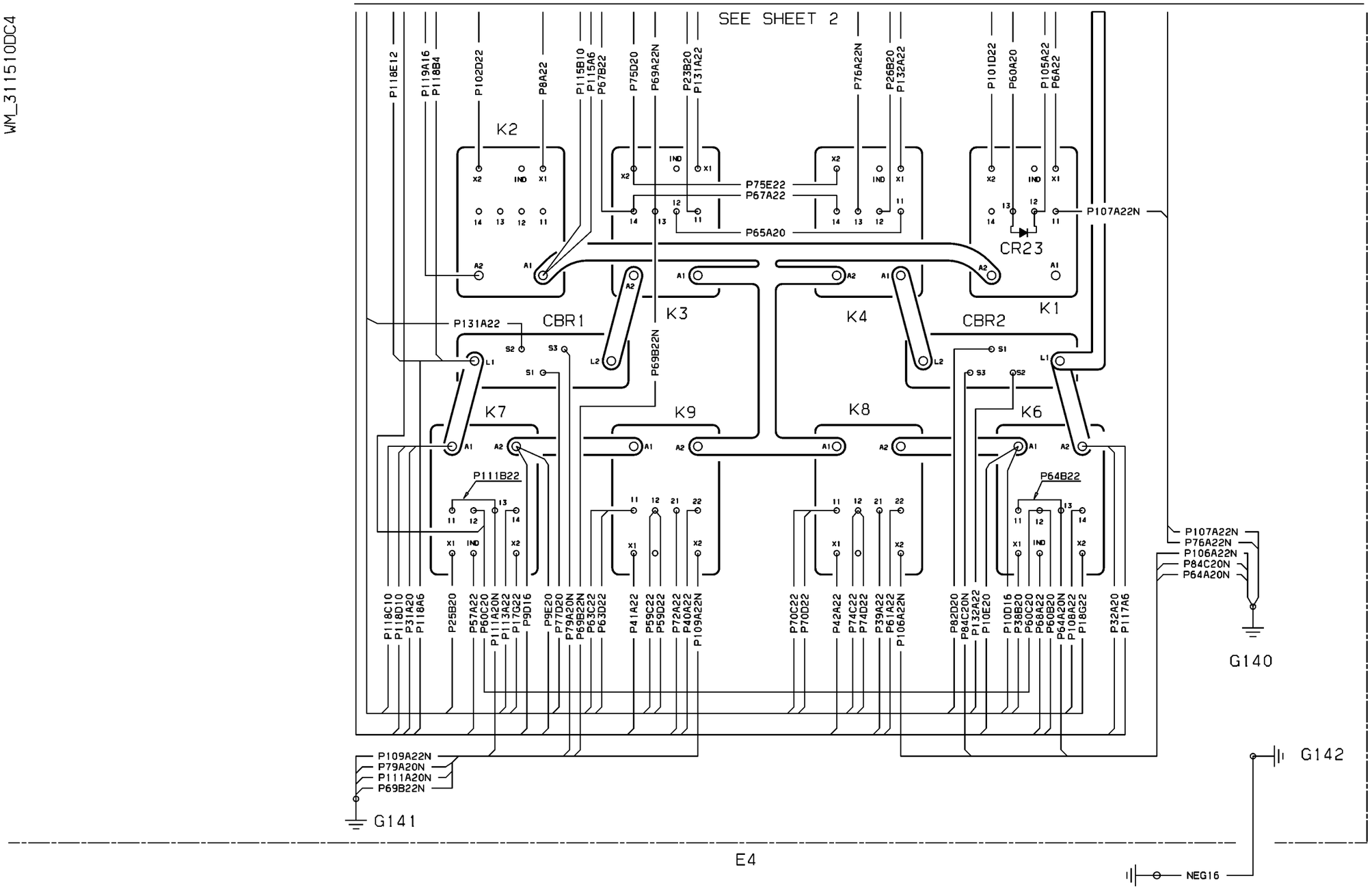

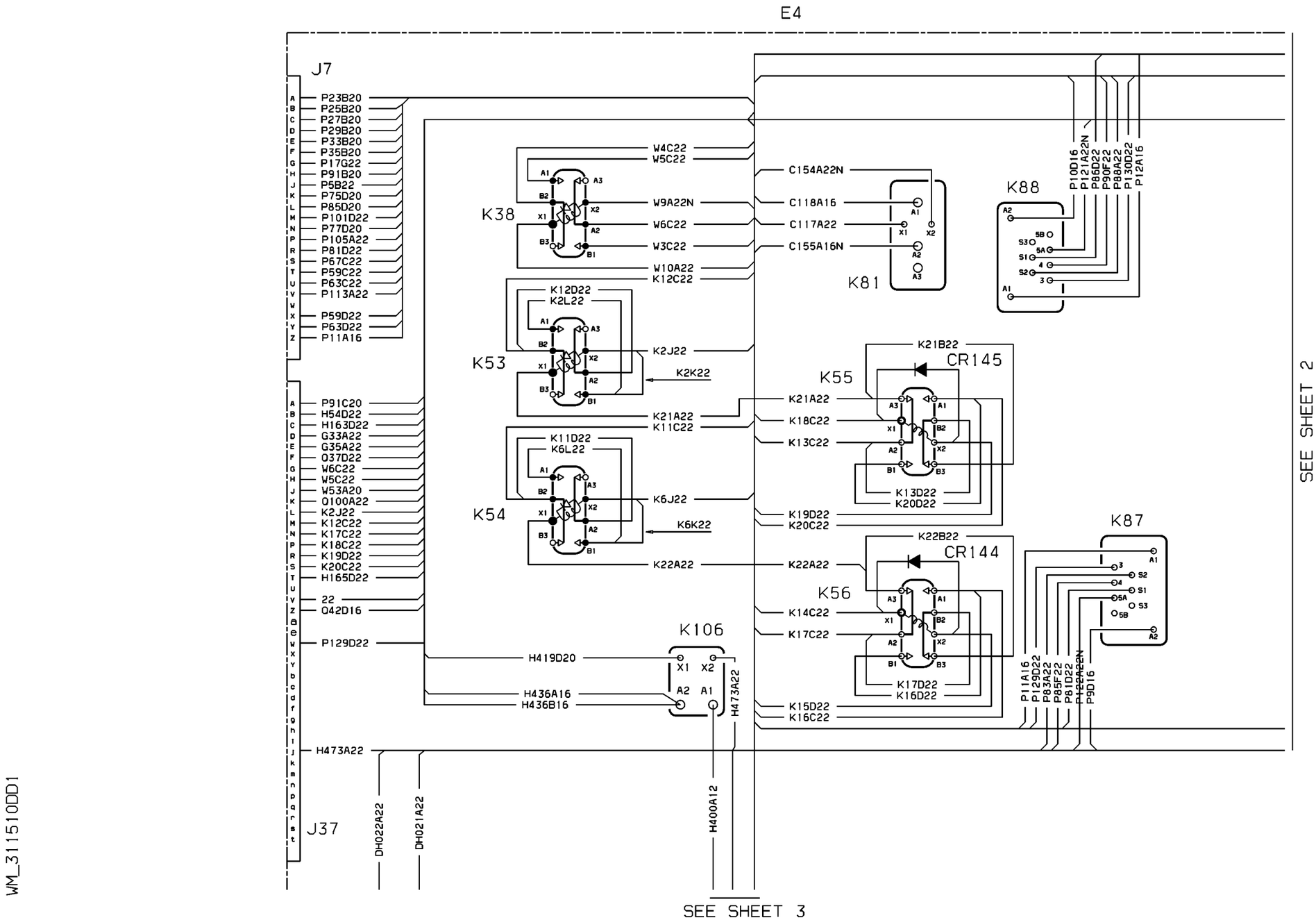


WM_311510DD1

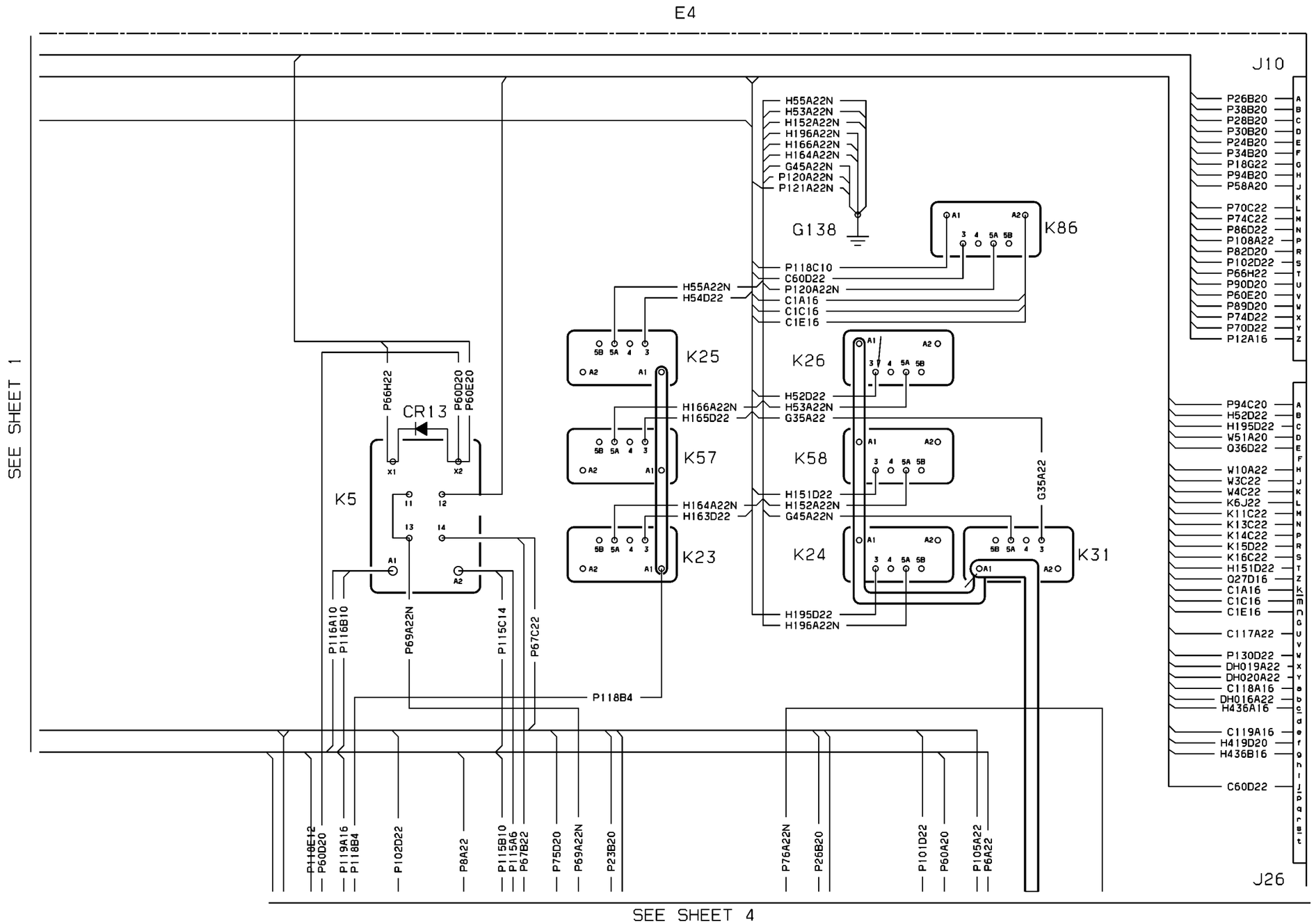
E4
J10
SEE SHEET 1
WM_311510DD2
H55A22N
H53A22N
H152A22N
H196A22N
H166A22N
H164A22N
G45A22N
P120A22N
P121A22N
G138
K86
P118C10
C60D22
P120A22N
C1A16
C1C16
C1E16
H55A22N
H54D22
K25
K26
H52D22
H166A22N
H53A22N
H165D22
G35A22
K57
K58
H151D22
H164A22N
H152A22N
H163D22
G45A22N
K5
K23
K24
K31
H195D22
H196A22N
P66H22
CR13
P60D20
P60E20
P116A10
P116B10
P69A22N
P115C14
P67C22
P118B4
P26B20
P38B20
P28B20
P30B20
P24B20
P34B20
P18G22
P94B20
P58A20
P70C22
P74C22
P86D22
P108A22
P82D20
P102D22
P66H22
P90D20
P60E20
P89D20
P74D22
P70D22
P12A16
P94C20
H52D22
H195D22
W51A20
Q36D22
W10A22
W3C22
W4C22
K6J22
K11C22
K13C22
K14C22
K15D22
K16C22
H151D22
Q27D16
C1A16
C1C16
C1E16
C117A22
P130D22
DH019A22
DH020A22
C118A16
DH016A22
H436A16
C119A16
H419D20
H436B16
C60D22
P118E12
P60D20
P119A16
P118B4
P102D22
P8A22
P115B10
P115A6
P67B22
P75D20
P69A22N
P23B20
P76A22N
P26B20
P101D22
P60A20
P105A22
P6A22
J26
SEE SHEET 4

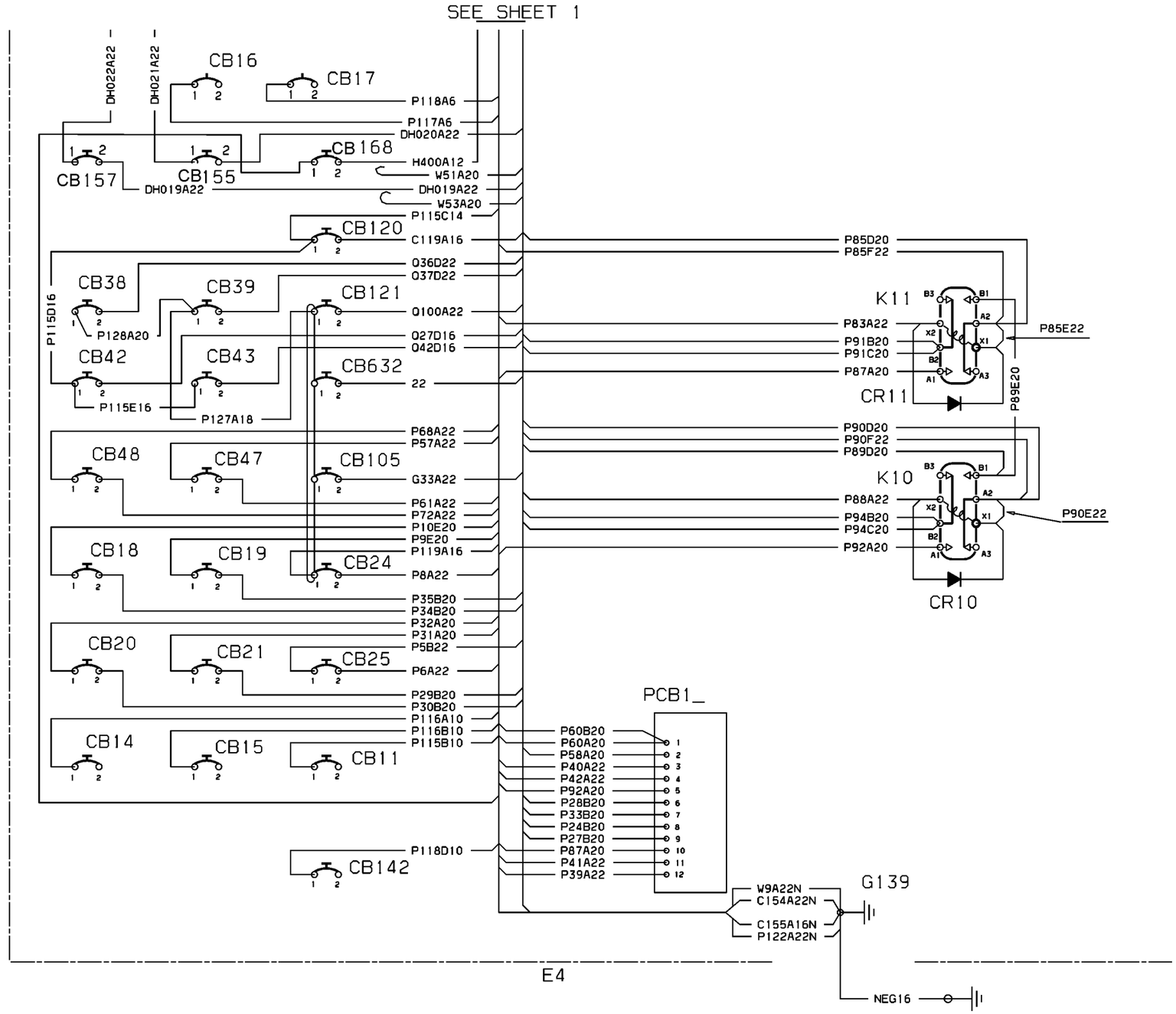


WM_311510DD3

| EFFECTIVITY: | INSTRUMENT & CONTROL PANELS |
|---|---|
| 1041,1042,1044,1046, 1049 | Main Junction Box |

**31-15-10**

WM_311510DD4

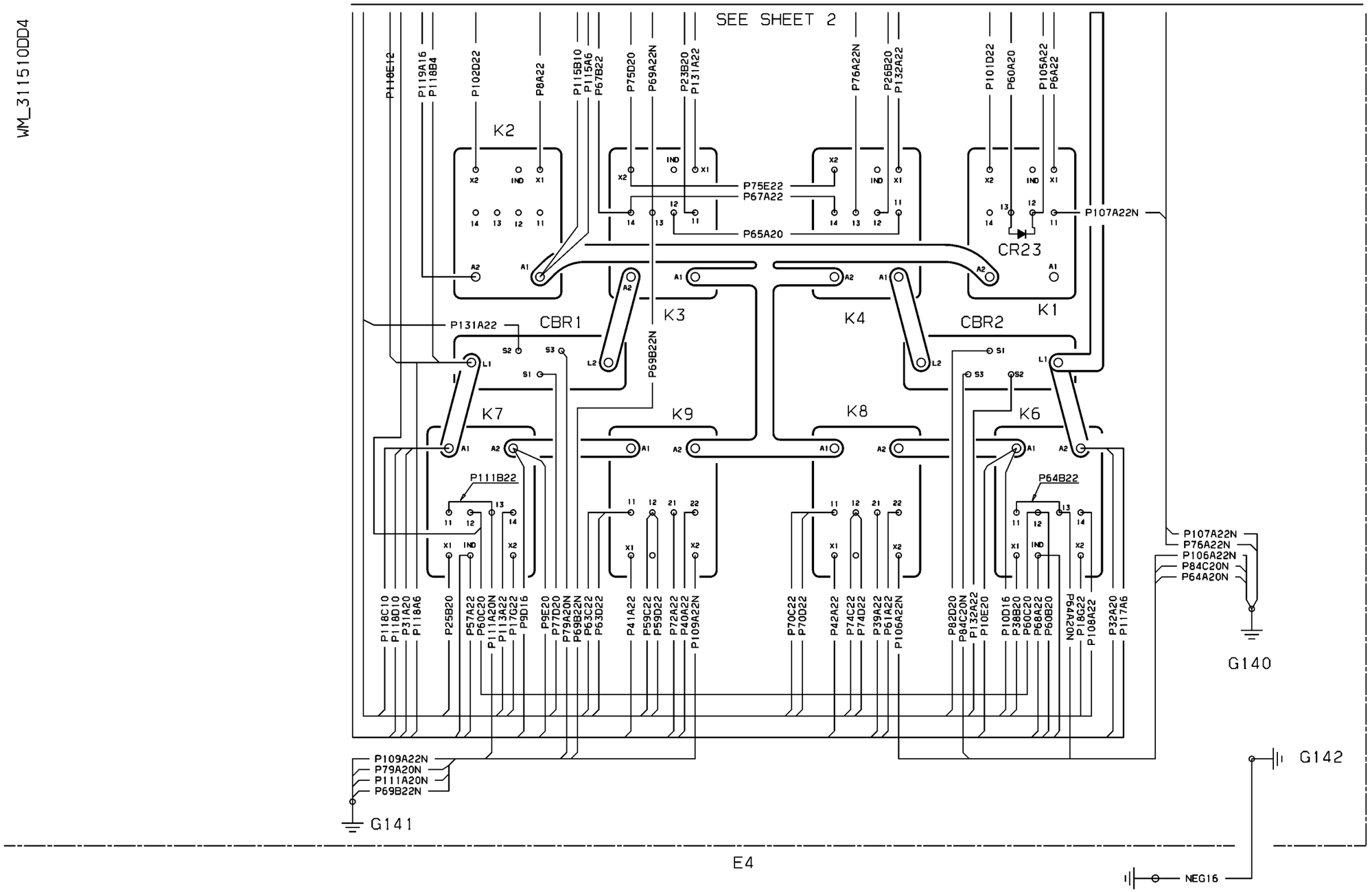


| EFFECTIVITY: | INSTRUMENT & CONTROL PANELS |
|---|---|
| 1041,1042,1044,1046, 1049 | Main Junction Box |

**31-15-10**

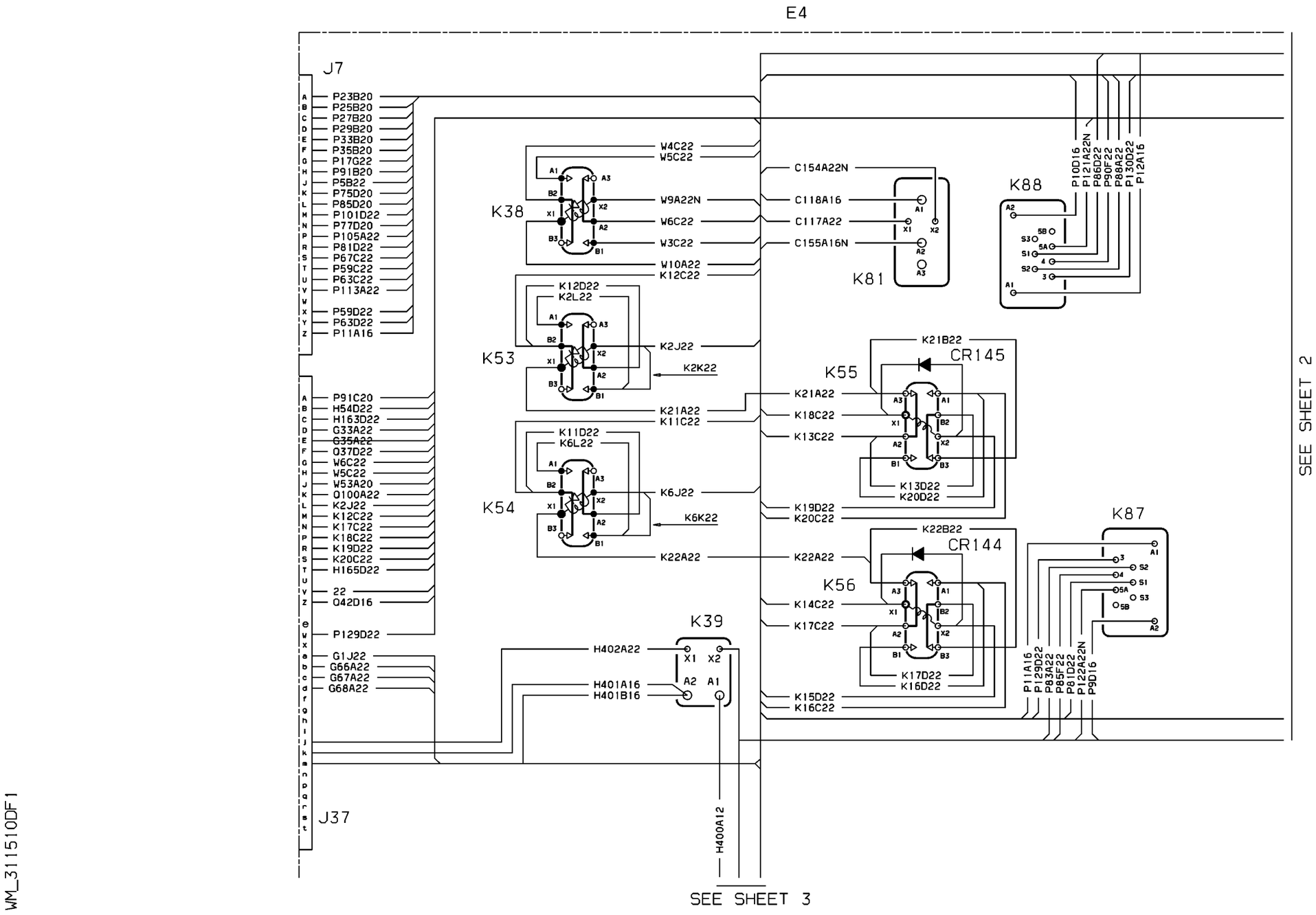


WM_311510DF1

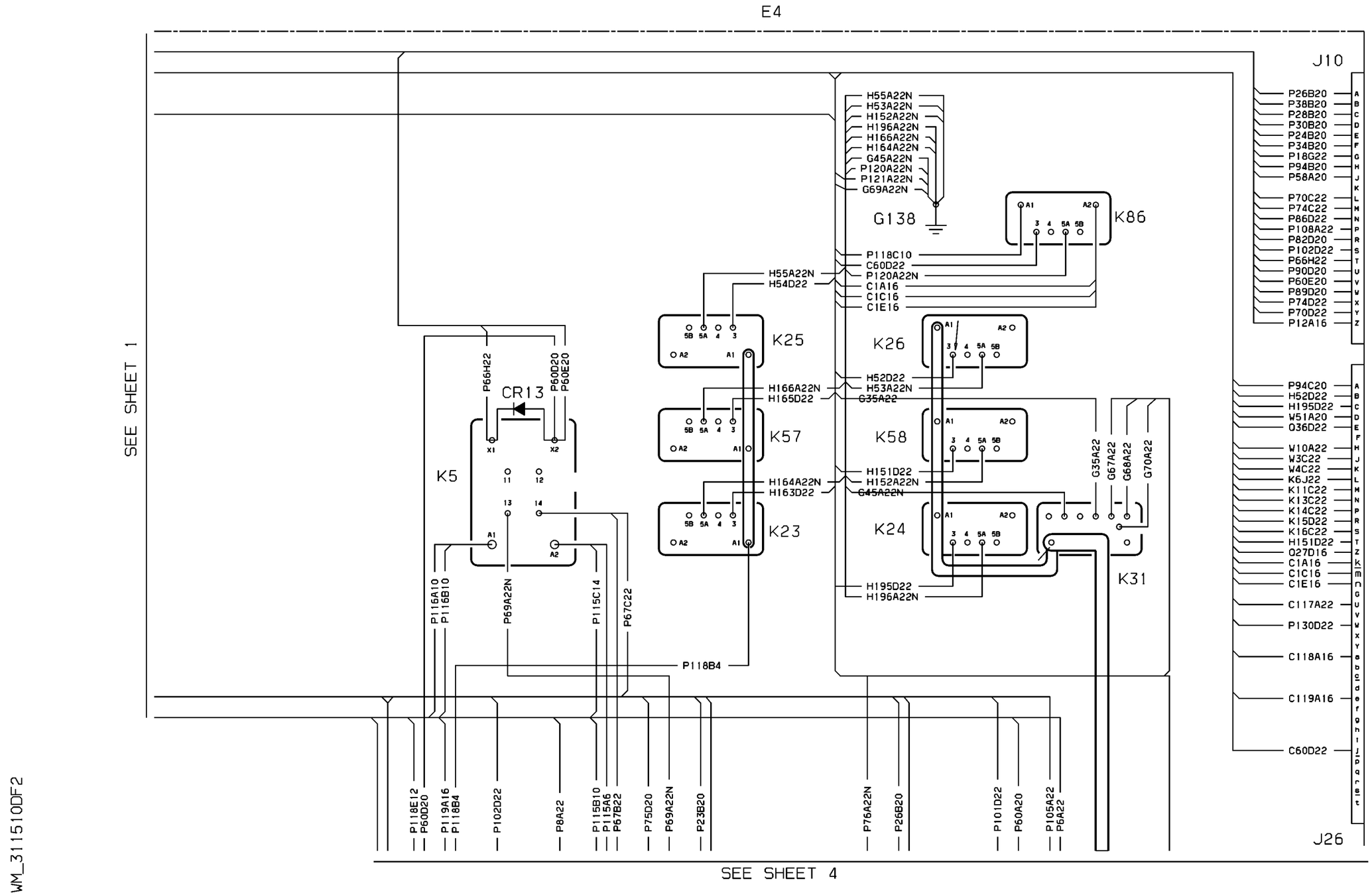
E4
SEE SHEET 1
J10
H55A22N
H53A22N
H152A22N
H196A22N
H166A22N
H164A22N
G45A22N
P120A22N
P121A22N
G69A22N
G138
K86
P118C10
C60D22
P120A22N
C1A16
C1C16
C1E16
H55A22N
H54D22
K25
K26
H52D22
H53A22N
G35A22
H166A22N
H165D22
K57
K58
H151D22
H152A22N
G45A22N
H164A22N
H163D22
K23
K24
K31
H195D22
H196A22N
K5
P66H22
CR13
P60D20
P60E20
P116A10
P116B10
P69A22N
P115C14
P67C22
P118B4
P118E12
P60D20
P119A16
P118B4
P102D22
P8A22
P115B10
P115A5
P67B22
P75D20
P69A22N
P23B20
P76A22N
P26B20
P101D22
P60A20
P105A22
P6A22
G35A22
G67A22
G68A22
G70A22
P26B20
P38B20
P28B20
P30B20
P24B20
P34B20
P18G22
P94B20
P58A20
P70C22
P74C22
P86D22
P108A22
P82D20
P102D22
P66H22
P90D20
P60E20
P89D20
P74D22
P70D22
P12A16
P94C20
H52D22
H195D22
W51A20
Q36D22
W10A22
W3C22
W4C22
K6J22
K11C22
K13C22
K14C22
K15D22
K16C22
H151D22
Q27D16
C1A16
C1C16
C1E16
C117A22
P130D22
C118A16
C119A16
C60D22
J26
SEE SHEET 4
WM_311510DF2

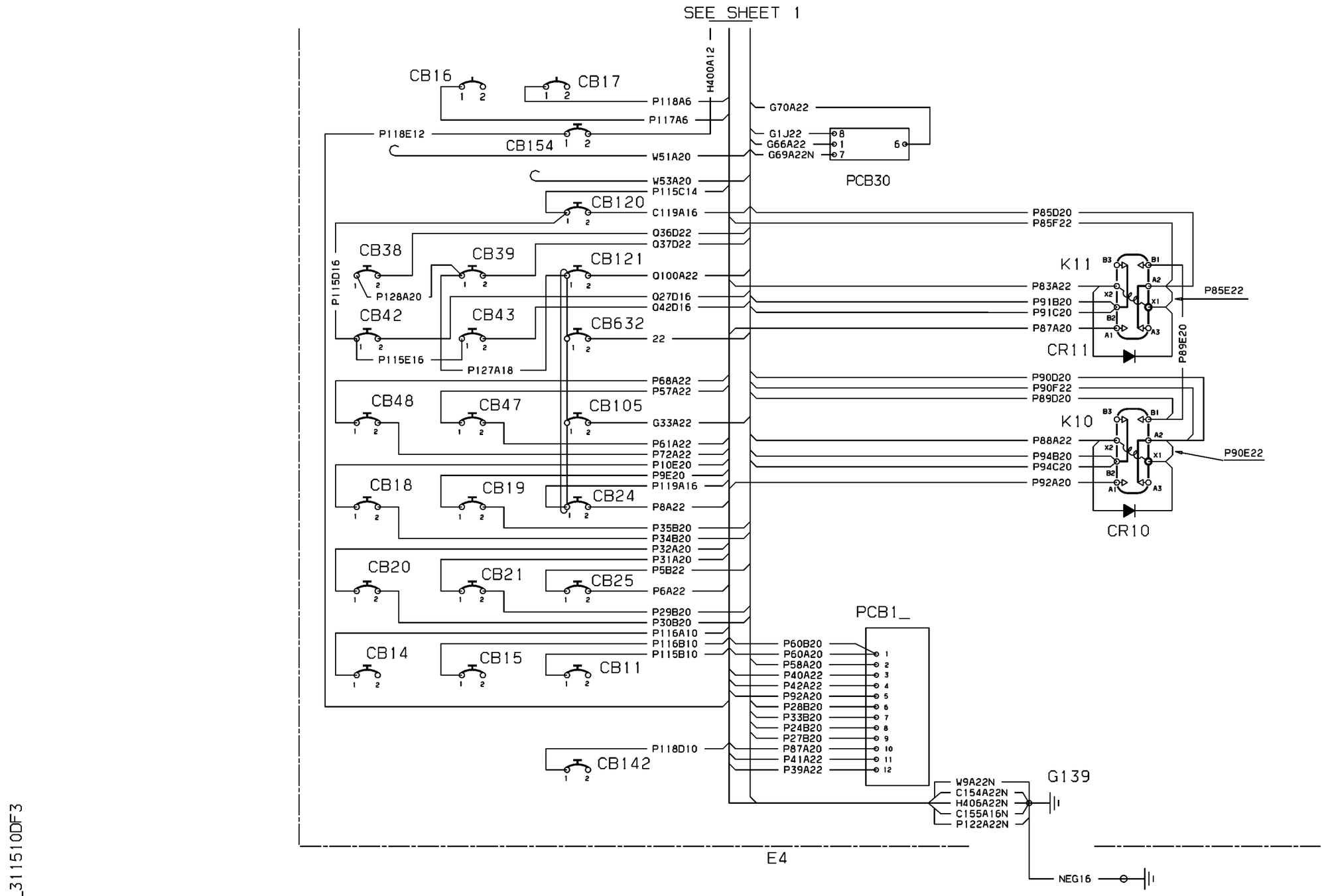
SEE SHEET 1
H400A12
CB16
CB17
P118A6
P117A6
P118E12
CB154
W51A20
G70A22
G1J22
G66A22
G69A22N
PCB30
W53A20
P115C14
CB120
C119A16
P85D20
P85F22
Q36D22
Q37D22
CB38
CB39
CB121
P115D16
P128A20
Q100A22
P83A22
P91B20
P91C20
P87A20
K11
CR11
P85E22
P89E20
Q27D16
Q42D16
CB42
CB43
CB632
22
P115E16
P127A18
P68A22
P57A22
P90D20
P90F22
P89D20
CB48
CB47
CB105
G33A22
K10
P88A22
P94B20
P94C20
P92A20
P90E22
CR10
P61A22
P72A22
P10E20
P9E20
P119A16
CB18
CB19
CB24
P8A22
P35B20
P34B20
P32A20
P31A20
P5B22
CB20
CB21
CB25
P6A22
P29B20
P30B20
P116A10
P116B10
P115B10
PCB1_
P60B20
P60A20
P58A20
P40A22
P42A22
P92A20
P28B20
P33B20
P24B20
P27B20
P87A20
P41A22
P39A22
CB14
CB15
CB11
P118D10
CB142
W9A22N
C154A22N
H406A22N
C155A16N
P122A22N
G139
NEG16
E4

WM_31510DF3

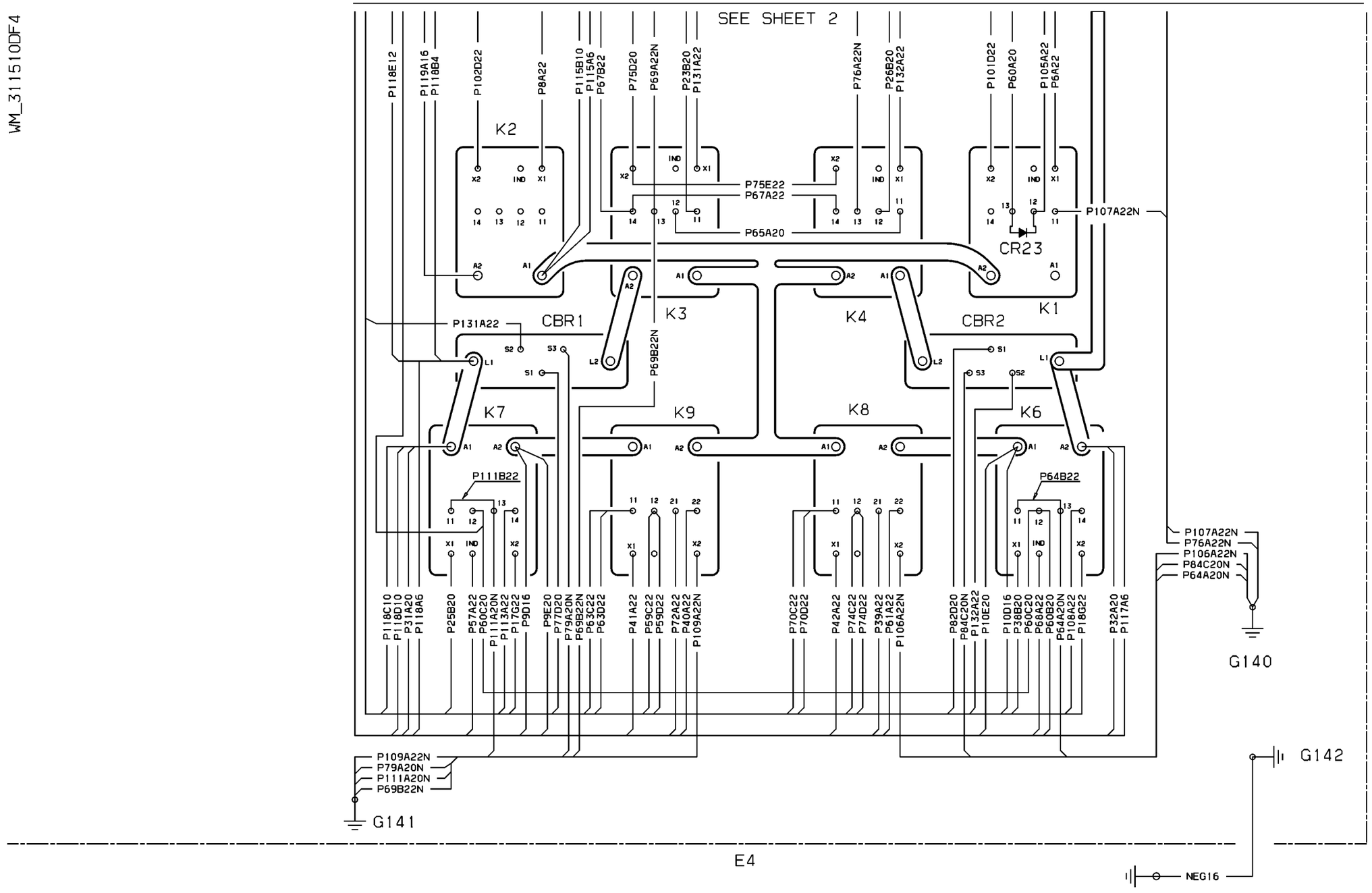
SEE SHEET 2
P118E12
P119A16
P118B4
P102D22
P8A22
P115B10
P115A6
P67B22
P75D20
P69A22N
P23B20
P131A22
P76A22N
P26B20
P132A22
P101D22
P60A20
P105A22
P6A22
K2
P75E22
P67A22
P65A20
P107A22N
CR23
P131A22
CBR1
K3
K4
CBR2
K1
P69B22N
K7
K9
K8
K6
P111B22
P64B22
P118C10
P118D10
P31A20
P118A6
P25B20
P57A22
P60C20
P111A20N
P113A22
P17G22
P9D16
P9E20
P77D20
P79A20N
P69B22N
P63C22
P63D22
P41A22
P59C22
P59D22
P72A22
P40A22
P109A22N
P70C22
P70D22
P42A22
P74C22
P74D22
P39A22
P61A22
P106A22N
P82D20
P84C20N
P132A22
P10E20
P10D16
P38B20
P60C20
P68A22
P60B20
P64A20N
P108A22
P18G22
P32A20
P117A6
P107A22N
P76A22N
P106A22N
P84C20N
P64A20N
G140
P109A22N
P79A20N
P111A20N
P69B22N
G141
G142
NEG16
E4

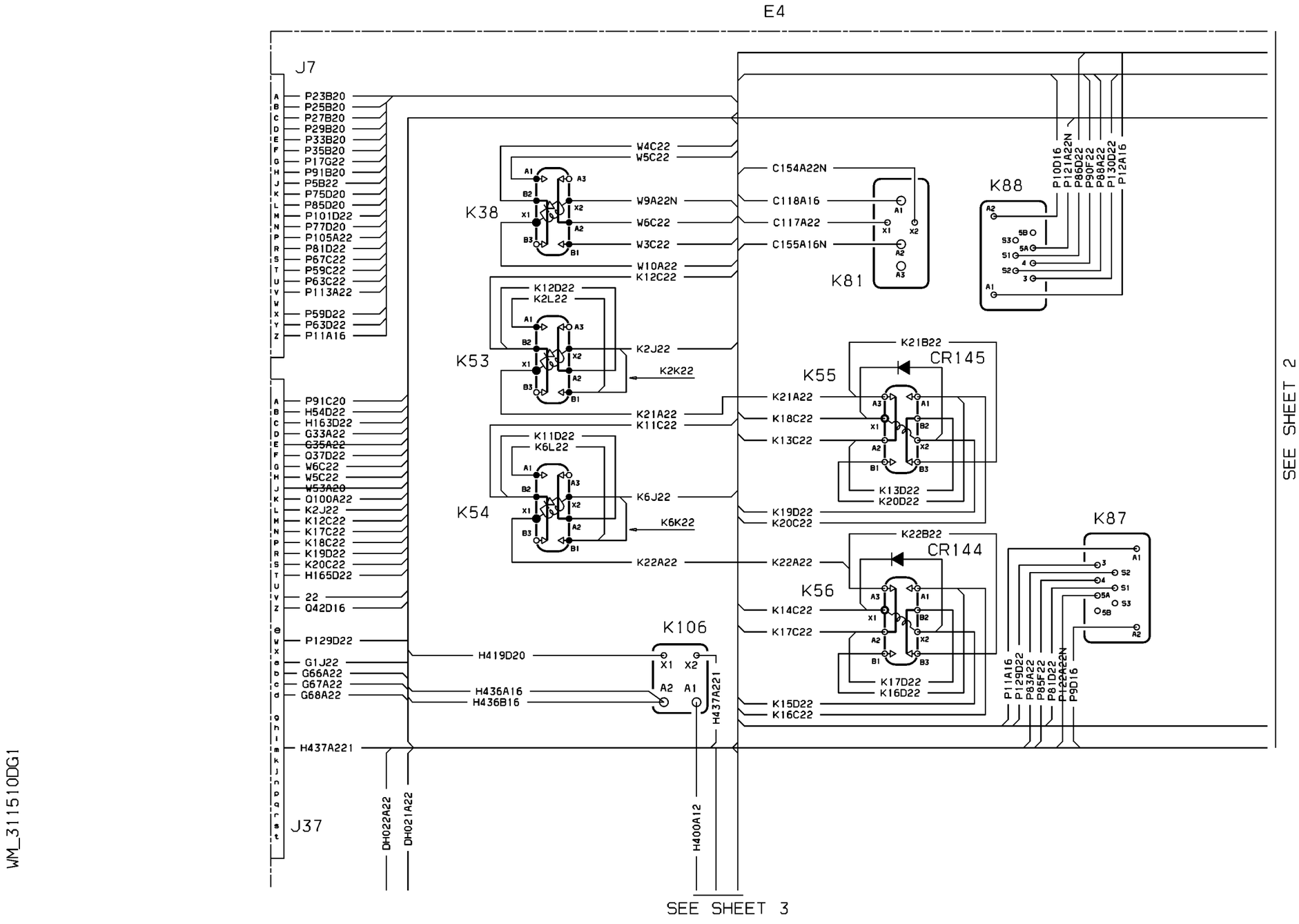
E4
J7
P23B20
P25B20
P27B20
P29B20
P33B20
P35B20
P17G22
P91B20
P5B22
P75D20
P85D20
P101D22
P77D20
P105A22
P81D22
P67C22
P59C22
P63C22
P113A22
P59D22
P63D22
P11A16
P91C20
H54D22
H163D22
G33A22
G35A22
Q37D22
W6C22
W5C22
W53A20
Q100A22
K2J22
K12C22
K17C22
K18C22
K19D22
K20C22
H165D22
22
Q42D16
P129D22
G1J22
G66A22
G67A22
G68A22
H437A221
J37
DH022A22
DH021A22
H400A12
W4C22
W5C22
W9A22N
W6C22
W3C22
W10A22
K12C22
K38
K12D22
K2L22
K2J22
K2K22
K53
K21A22
K11C22
K11D22
K6L22
K6J22
K6K22
K54
K22A22
H419D20
H436A16
H436B16
K106
H437A221
C154A22N
C118A16
C117A22
C155A16N
K81
K88
P10D16
P121A22N
P86D22
P90F22
P88A22
P130D22
P12A16
K21B22
CR145
K55
K21A22
K18C22
K13C22
K13D22
K20D22
K19D22
K20C22
K22B22
CR144
K56
K14C22
K17C22
K17D22
K16D22
K15D22
K16C22
K87
P11A16
P129D22
P83A22
P85F22
P81D22
P122A22N
P9D16
SEE SHEET 2
SEE SHEET 3
WM_311510DG1

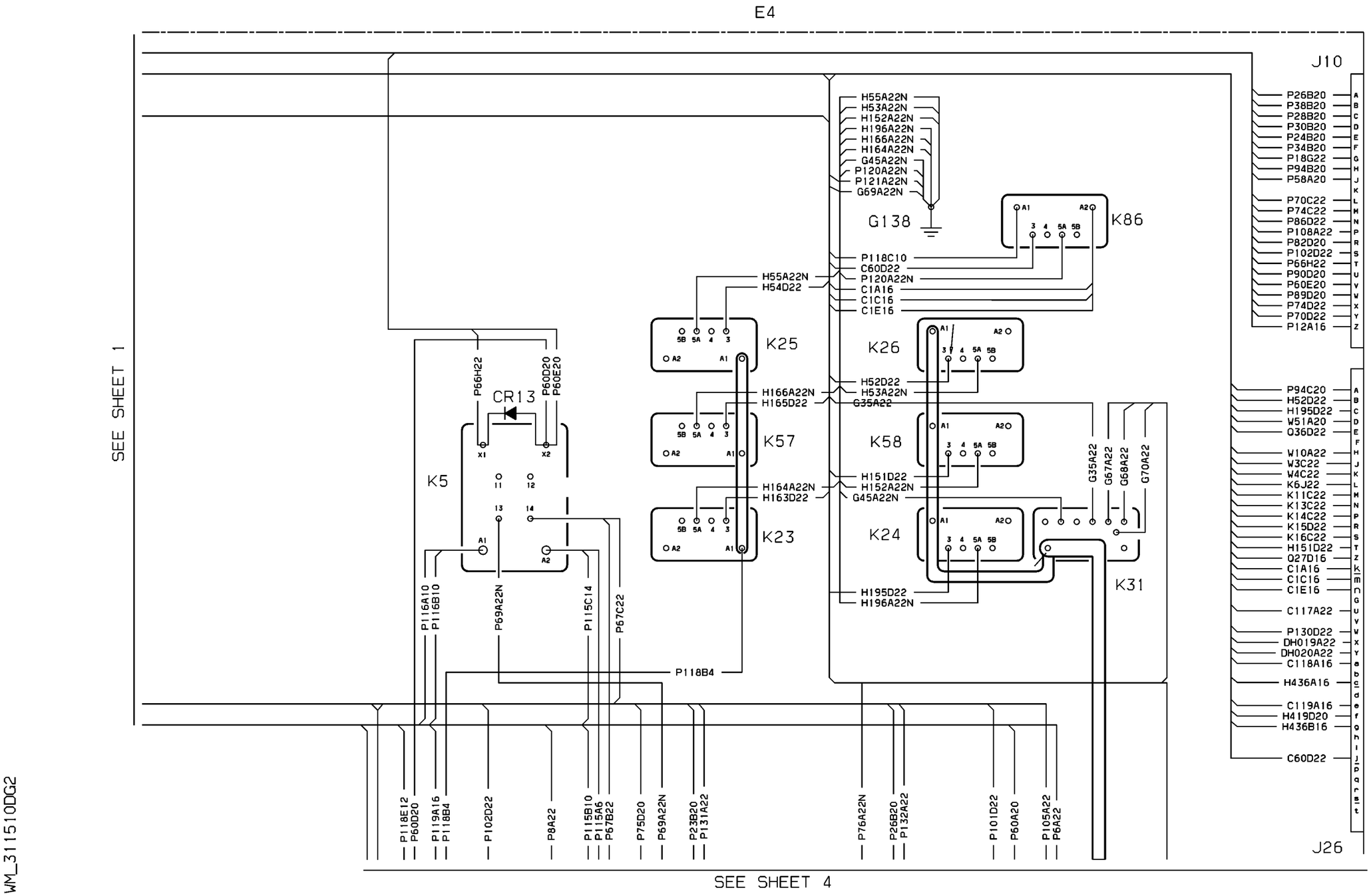
E4
J10
SEE SHEET 1
H55A22N
H53A22N
H152A22N
H196A22N
H166A22N
H164A22N
G45A22N
P120A22N
P121A22N
G69A22N
G138
K86
P118C10
C60D22
P120A22N
C1A16
C1C16
C1E16
H55A22N
H54D22
K25
K26
H52D22
H53A22N
G35A22
H166A22N
H165D22
K57
K58
H151D22
H152A22N
G45A22N
H164A22N
H163D22
K23
K24
K31
H195D22
H196A22N
P66H22
CR13
P60D20
P60E20
K5
P116A10
P116B10
P69A22N
P115C14
P67C22
P118B4
P26B20
P38B20
P28B20
P30B20
P24B20
P34B20
P18G22
P94B20
P58A20
P70C22
P74C22
P86D22
P108A22
P82D20
P102D22
P66H22
P90D20
P60E20
P89D20
P74D22
P70D22
P12A16
P94C20
H52D22
H195D22
W51A20
Q36D22
W10A22
W3C22
W4C22
K6J22
K11C22
K13C22
K14C22
K15D22
K16C22
H151D22
Q27D16
C1A16
C1C16
C1E16
C117A22
P130D22
DH019A22
DH020A22
C118A16
H436A16
C119A16
H419D20
H436B16
C60D22
G35A22
G67A22
G68A22
G70A22
P118E12
P60D20
P119A16
P118B4
P102D22
P8A22
P115B10
P115A6
P67B22
P75D20
P69A22N
P23B20
P131A22
P76A22N
P26B20
P132A22
P101D22
P60A20
P105A22
P6A22
J26
SEE SHEET 4
WM_311510DG2

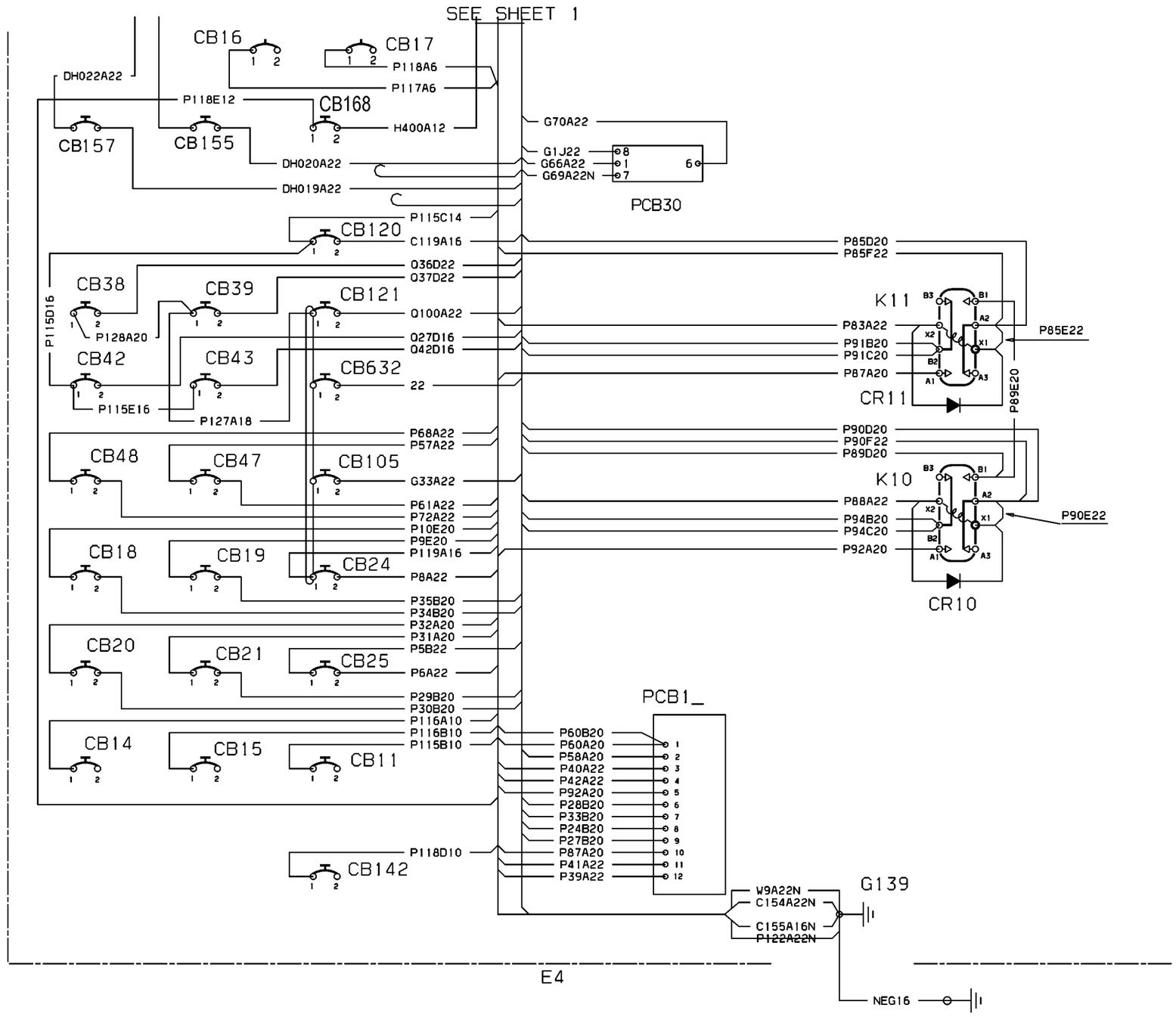


WM_311510DG3

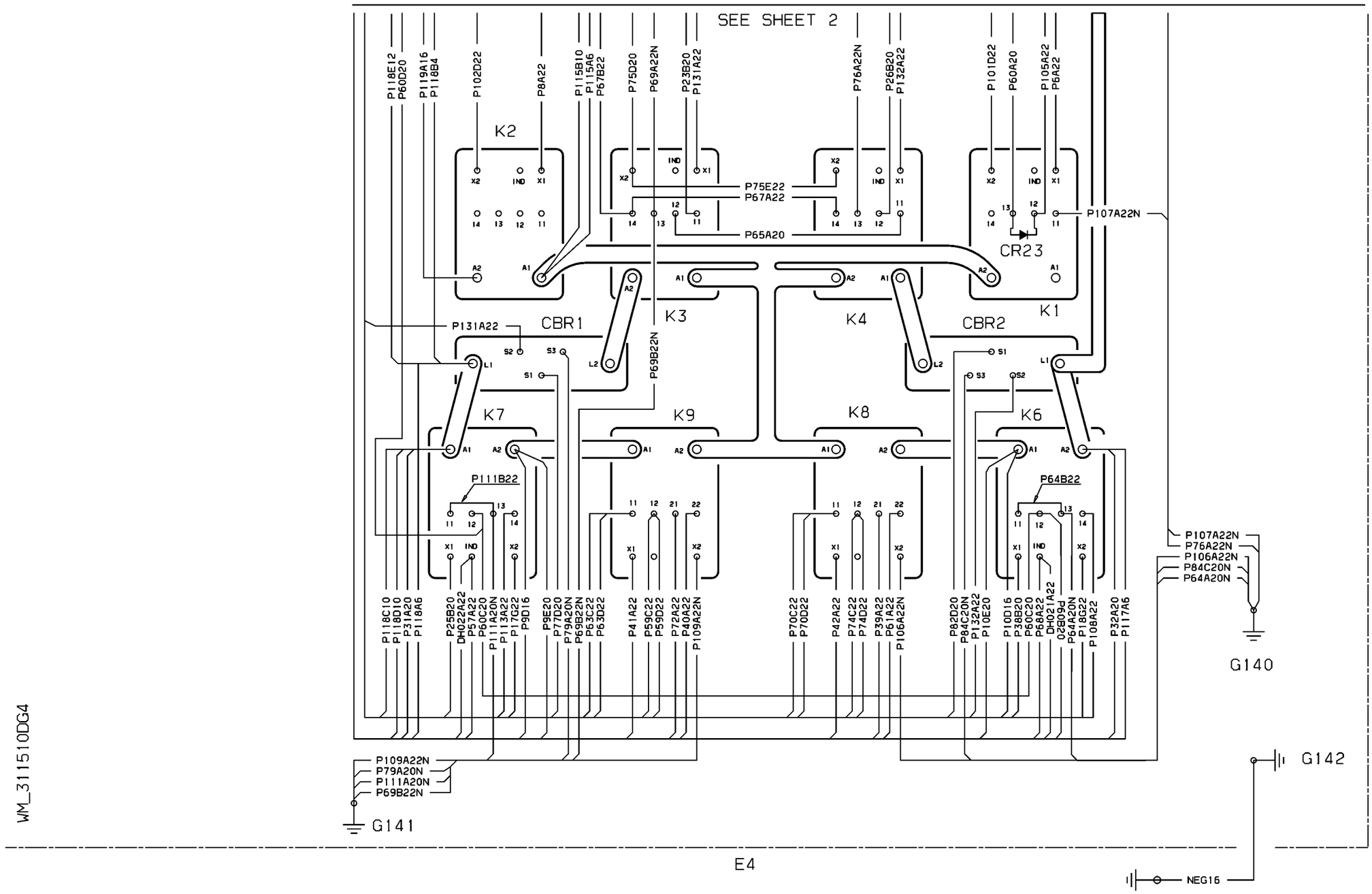


| EFFECTIVITY: | INSTRUMENT & CONTROL PANELS |
|---|---|
| 1052,1053,1055,1056, 1058-1104 | Main Junction Box |

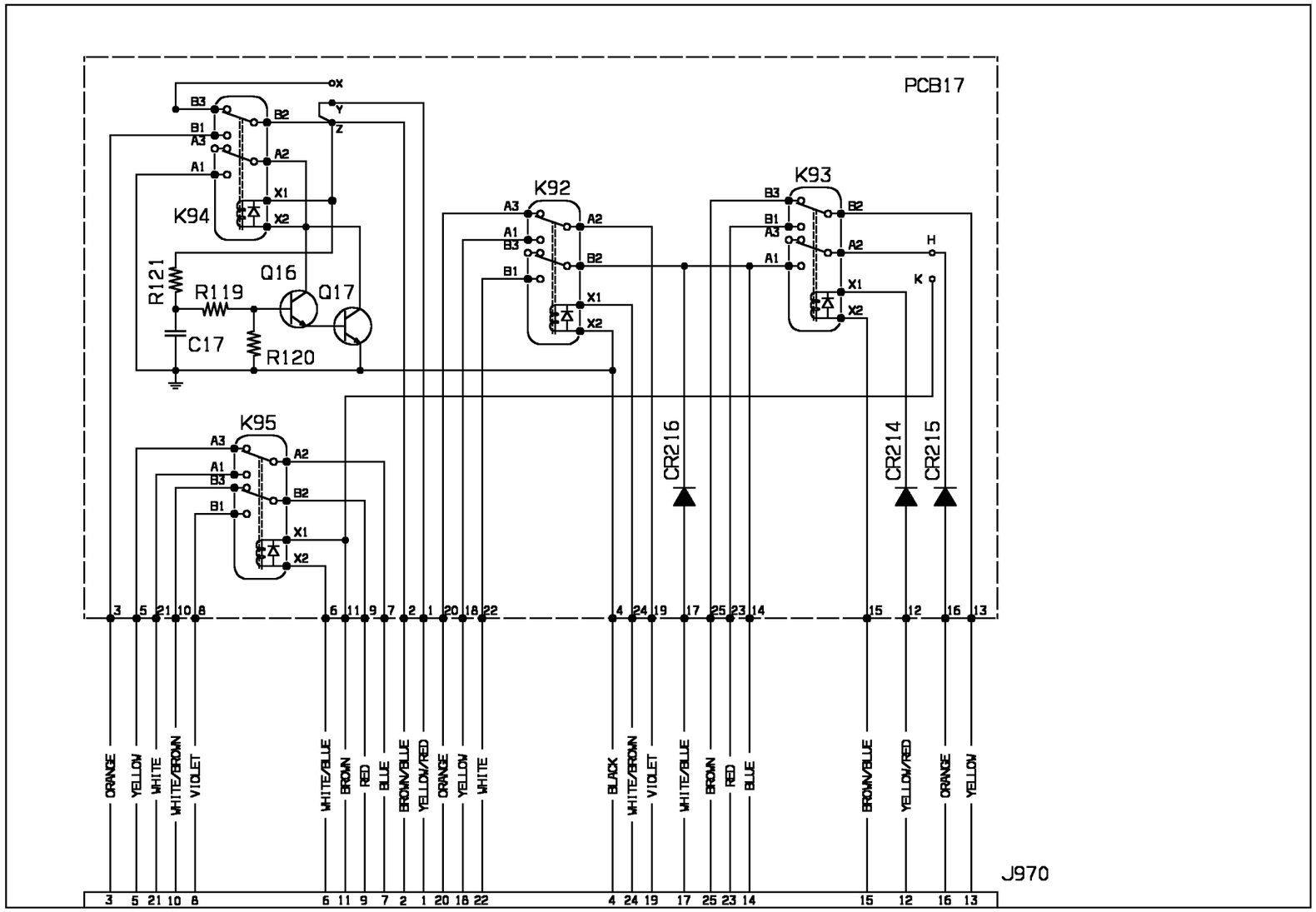
PCB17
K94
K92
K93
K95
R121
R119
R120
C17
Q16
Q17
CR216
CR214
CR215
J970
ORANGE
YELLOW
WHITE
WHITE/BROWN
VIOLET
WHITE/BLUE
BROWN
RED
BLUE
BROWN/BLUE
YELLOW/RED
ORANGE
YELLOW
WHITE
BLACK
WHITE/BROWN
VIOLET
WHITE/BLUE
BROWN
RED
BLUE
BROWN/BLUE
YELLOW/RED
ORANGE
YELLOW

WM_311610KK

WM_311710_P1_S1

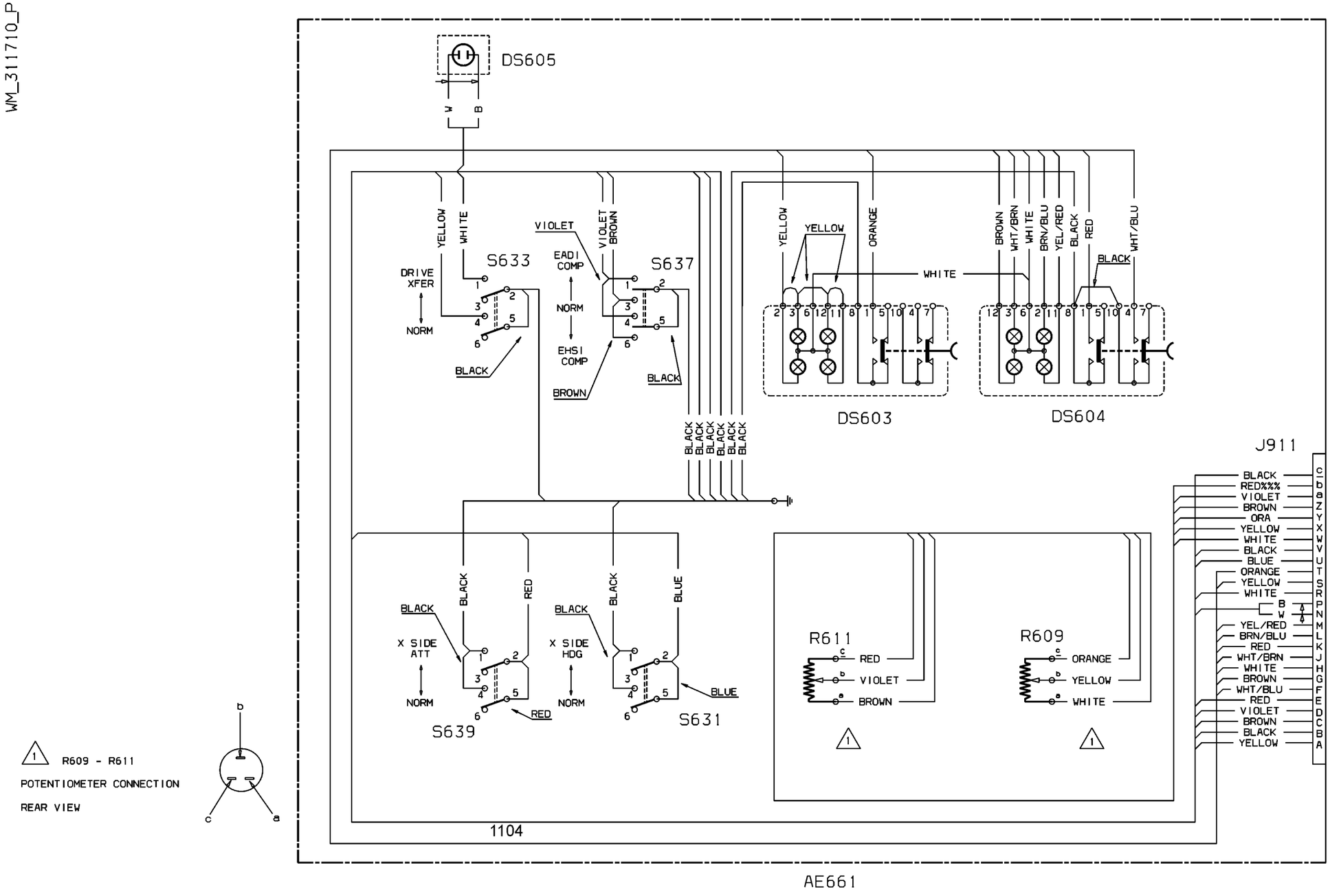


1 R609 - R611
POTENTIOMETER CONNECTION
REAR VIEW




80-118257_D2

WM_311720_P1_S1

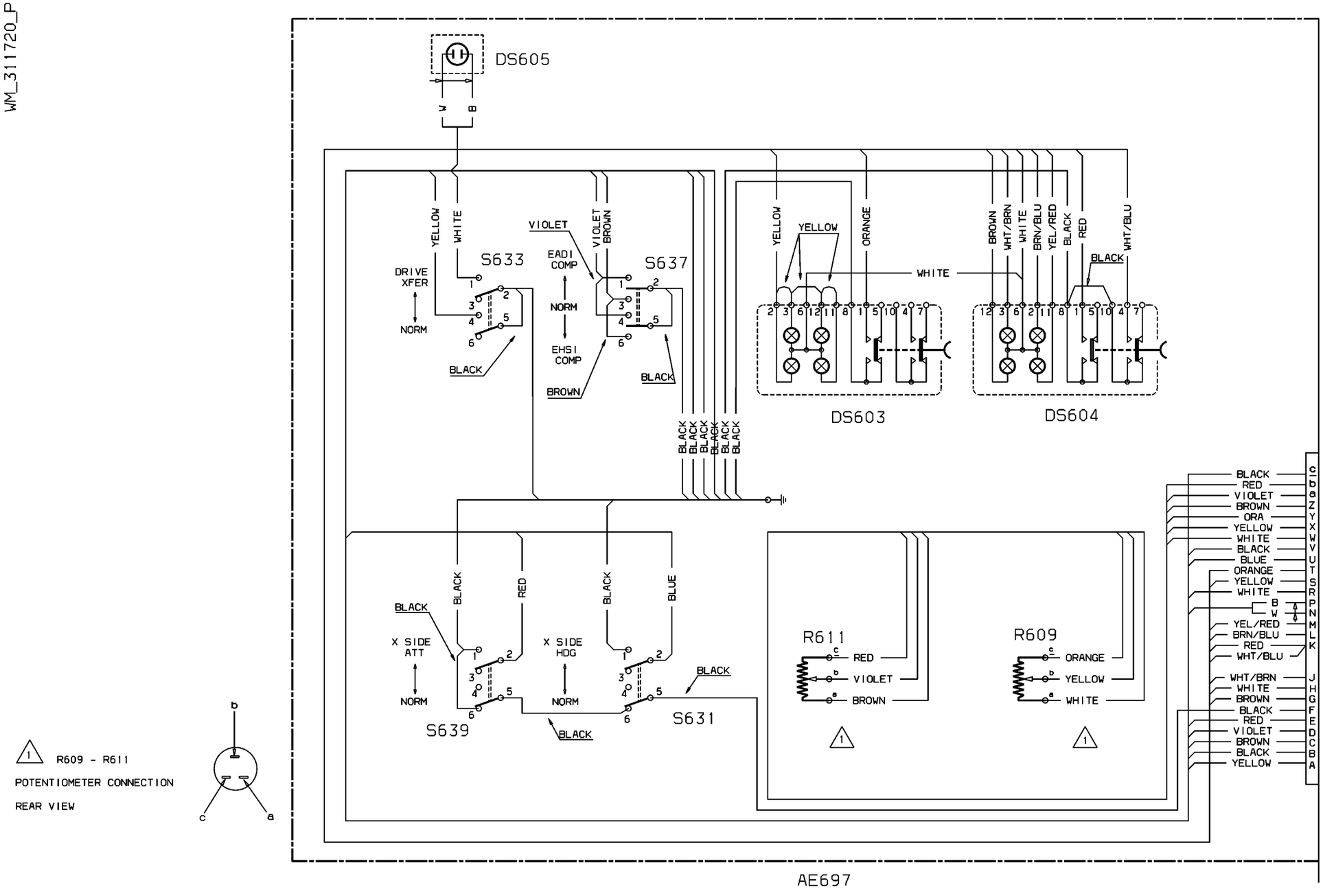


80k118489_1A

AIRPLANES S.N. 1004 TO 1021
WITHOUT S.B. 80-0040 EMBODIED

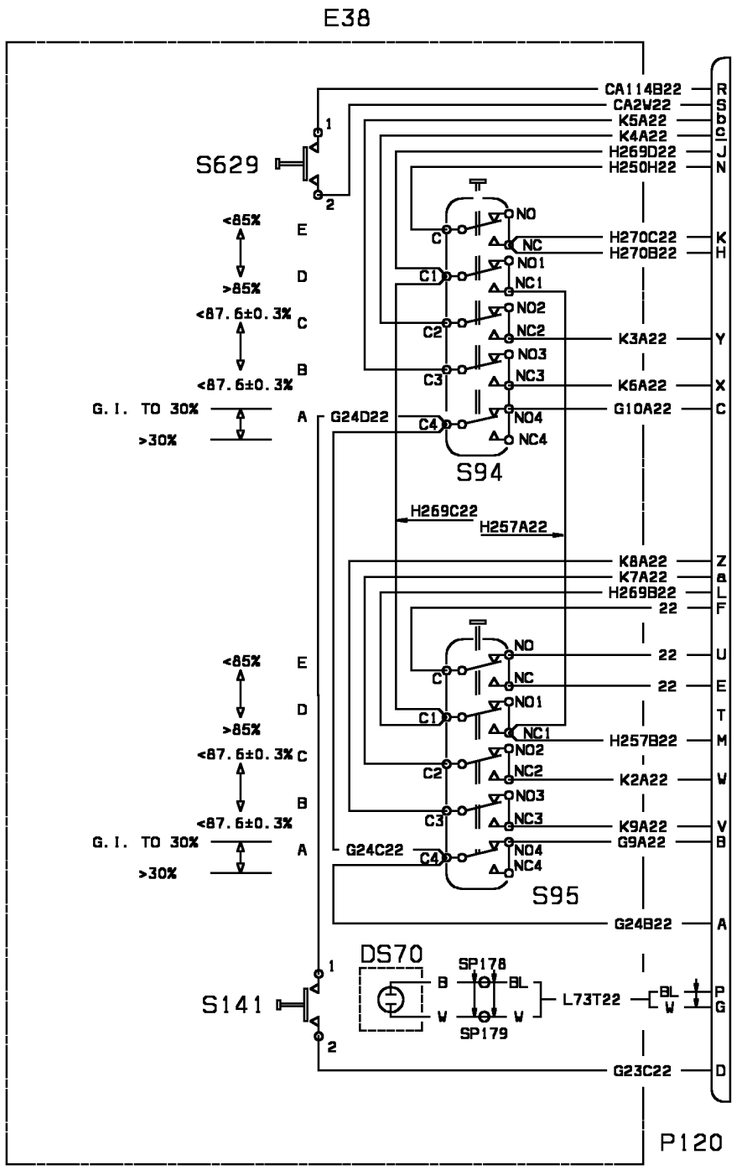


AIRPLANES S.N. 1022 AND UP
AIRPLANES S.N. 1004 TO 1021 WITH S.B. 80-0040 EMBODIED

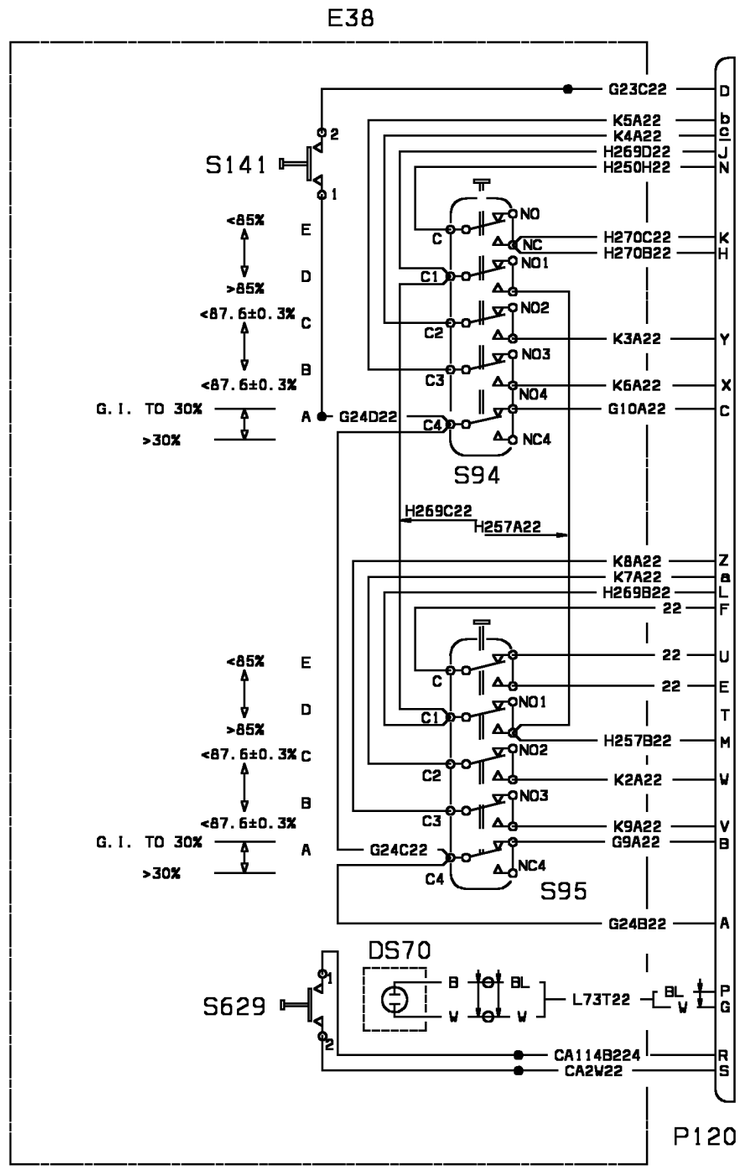


WM_311800AA

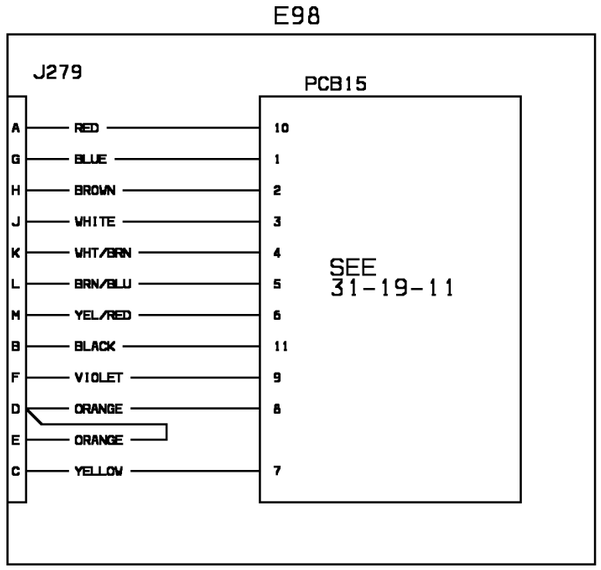
E98
J279
PCB15
A
RED
10
G
BLUE
1
H
BROWN
2
J
WHITE
3
K
WHT/BRN
4
L
BRN/BLU
5
M
YEL/RED
6
B
BLACK
11
F
VIOLET
9
D
ORANGE
8
E
ORANGE
C
YELLOW
7
SEE
31-19-11

WM_311900AA

PCB15

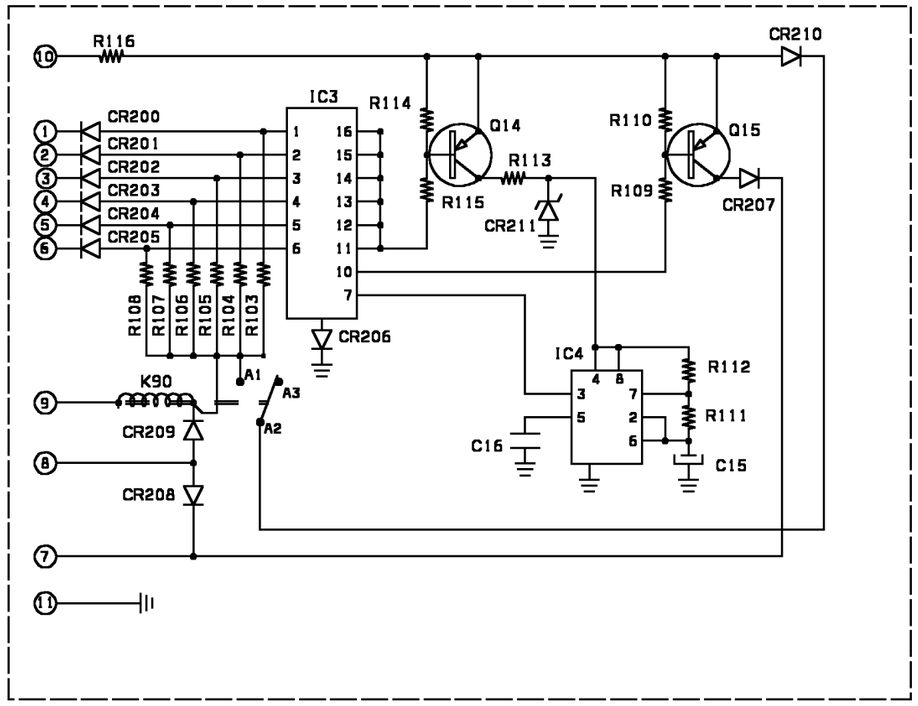


WM_311911AA

| EFFECTIVITY: | INSTRUMENT & CONTROL PANELS<br>Monitor Unit-anti Ice (PCB15) |
|---|---|

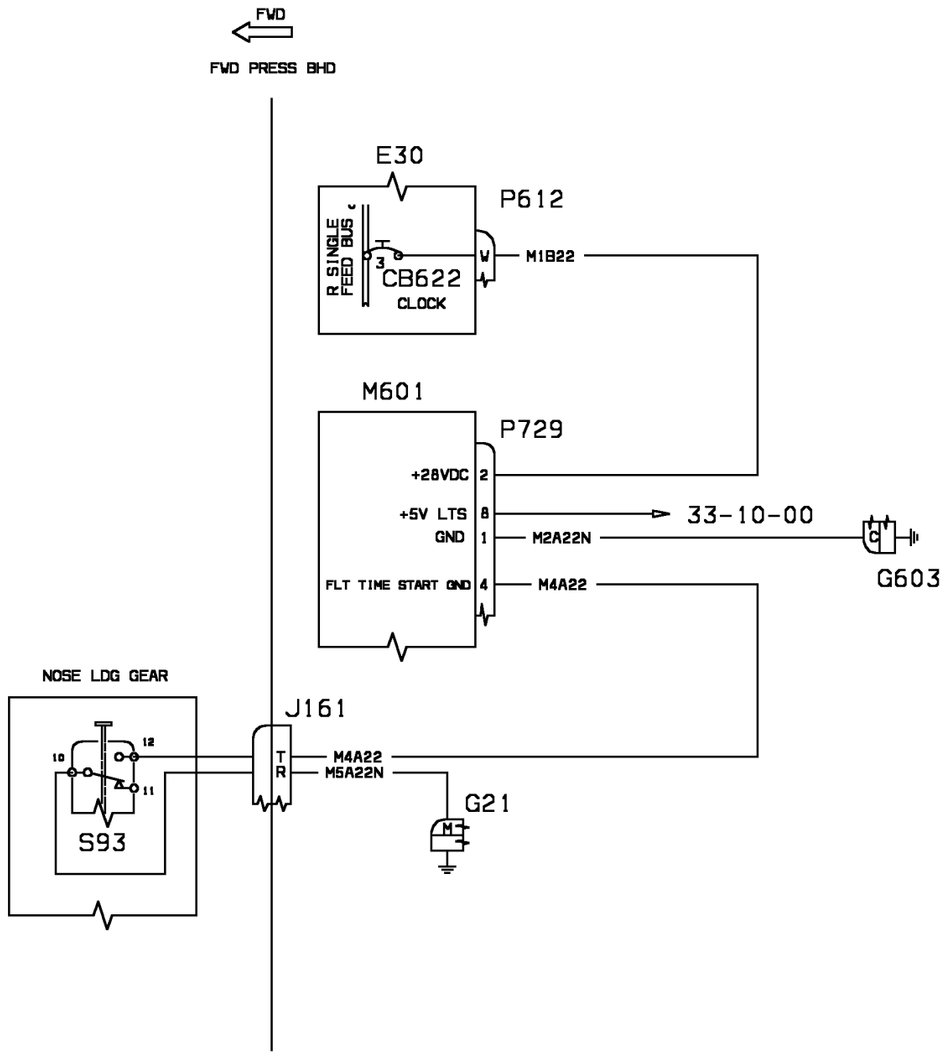
FWD
FWD PRESS BHD
E30
P612
R SINGLE FEED BUS
CB622
CLOCK
3
W
M1B22
M601
P729
+28VDC
2
+5V LTS
8
33-10-00
GND
1
M2A22N
G603
FLT TIME START GND
4
M4A22
NOSE LDG GEAR
J161
10
12
11
S93
T
R
M4A22
M5A22N
G21

WM_312000AA

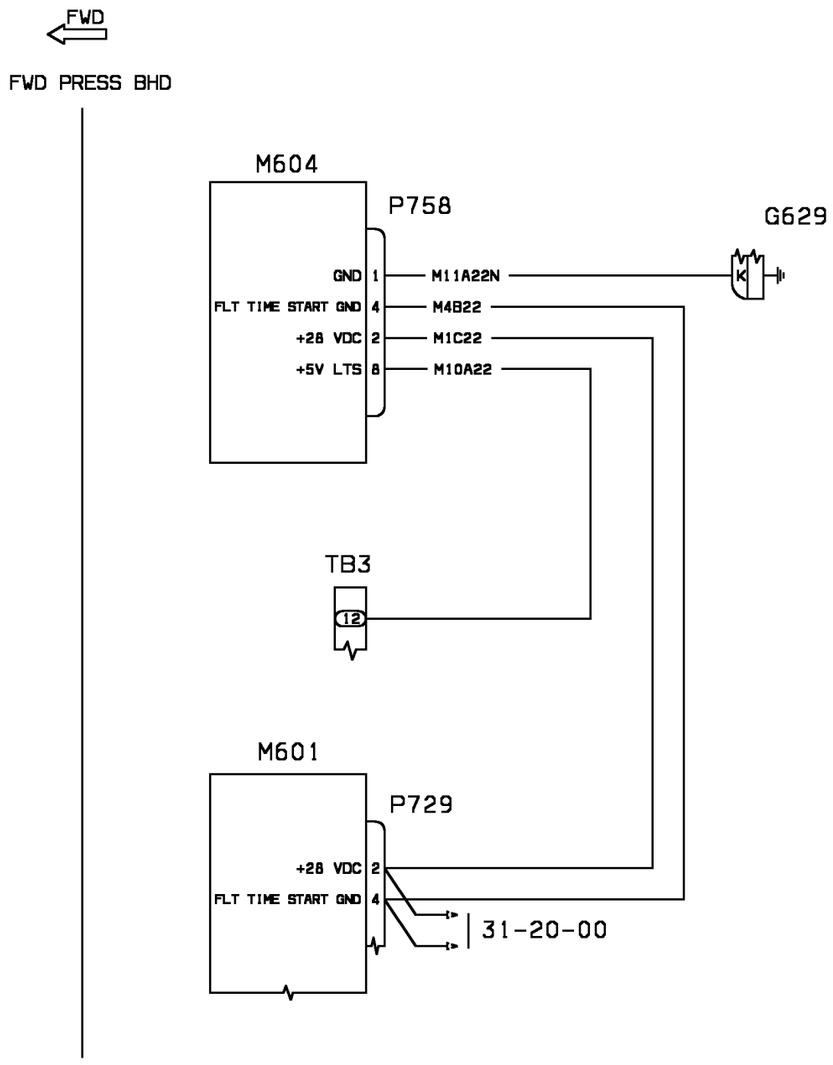


NOTE:M604 NORMALLY LOCATED IN ZONE 224. SOME INSTALLATIONS REQUIRE LOCATION IN ZONE 214

WM_312100AA

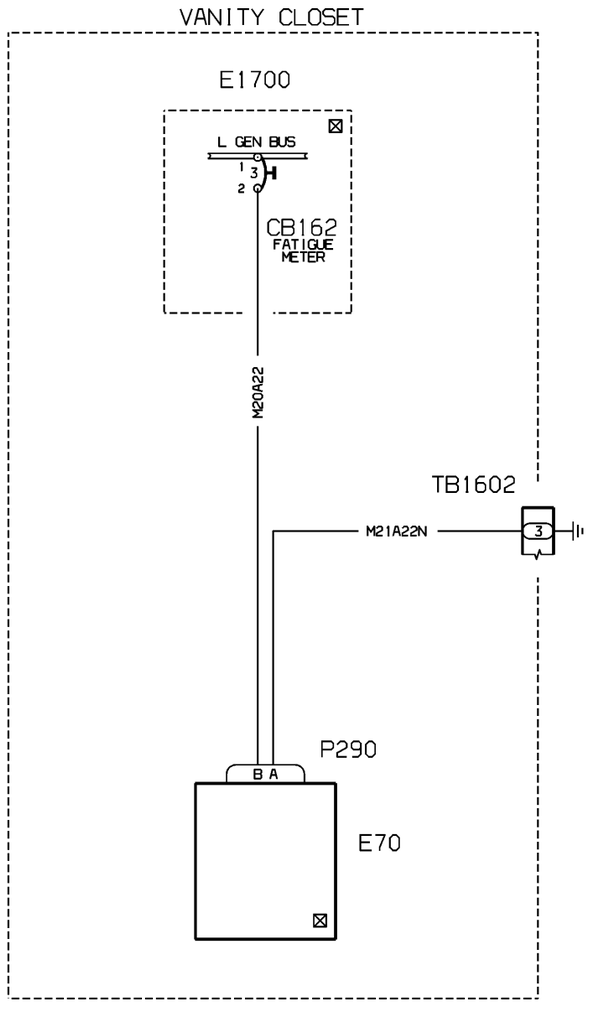


WM_313000_P1_S1

80k008551_1A

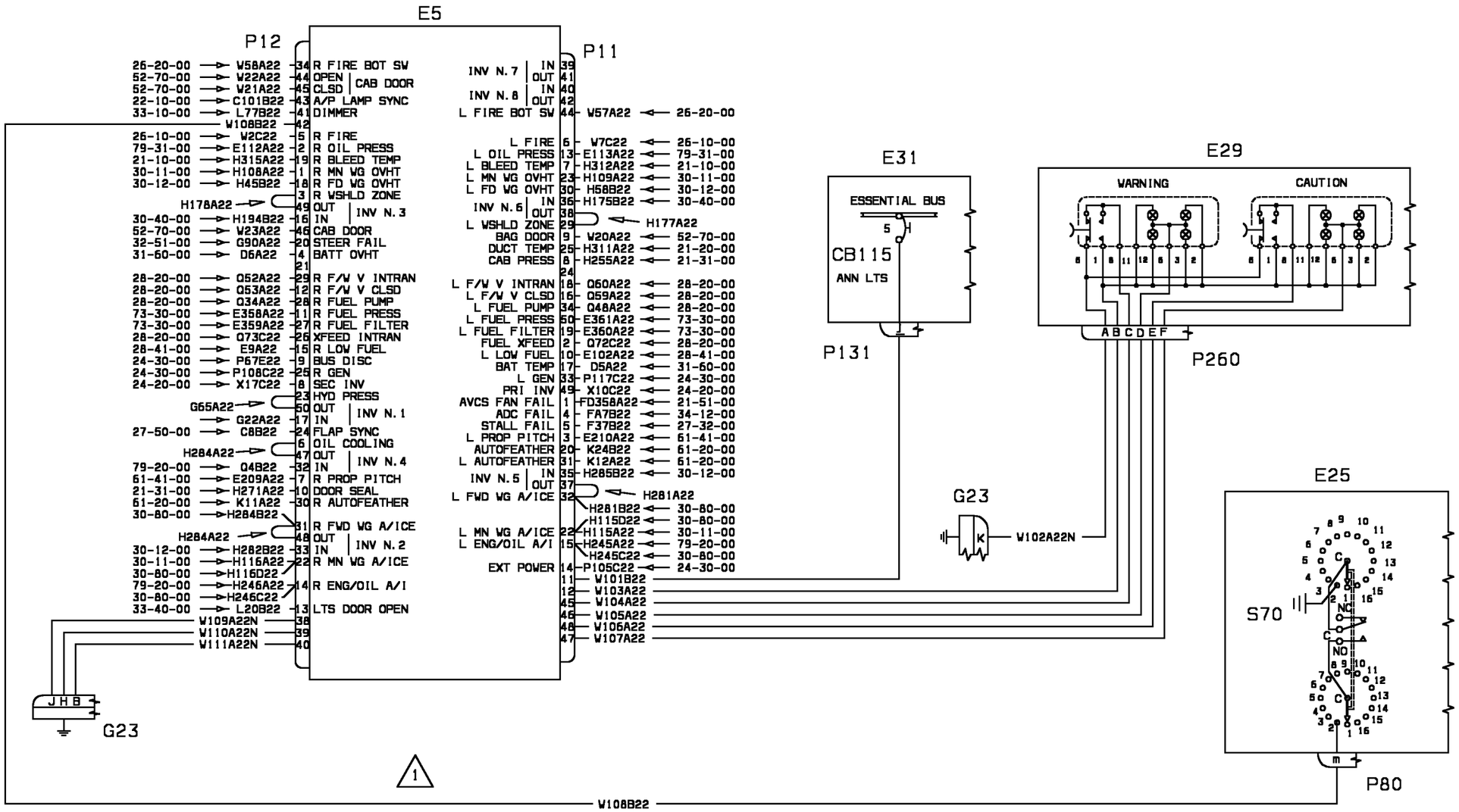


WM_315000BL

1 THIS CONNECTION ONLY WHEN THE MULTISENSOR AREA NAVIGATION SYSTEMS (OPTIONAL EQUIPMENT) ARE NOT INSTALLED

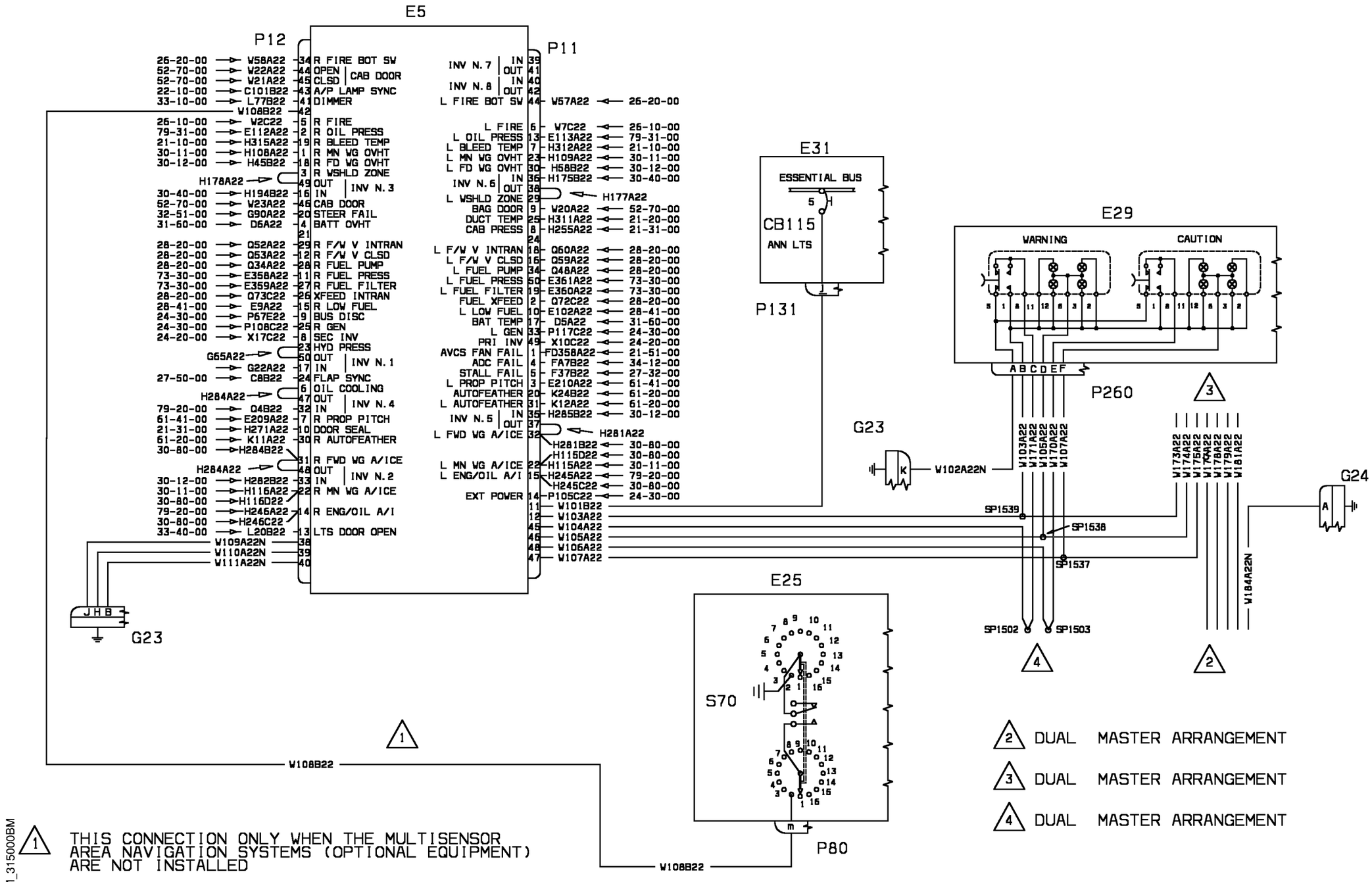
E5
P12
26-20-00 W58A22 34 R FIRE BOT SW
52-70-00 W22A22 44 OPEN | CAB DOOR
52-70-00 W21A22 45 CLSD
22-10-00 C101B22 43 A/P LAMP SYNC
33-10-00 L77B22 41 DIMMER
W108B22 42
26-10-00 W2C22 5 R FIRE
79-31-00 E112A22 2 R OIL PRESS
21-10-00 H315A22 19 R BLEED TEMP
30-11-00 H108A22 1 R MN WG OVHT
30-12-00 H45B22 18 R FD WG OVHT
3 R WSHLD ZONE
H178A22 49 OUT | INV N.3
30-40-00 H194B22 16 IN
52-70-00 W23A22 46 CAB DOOR
32-51-00 G90A22 20 STEER FAIL
31-60-00 D6A22 4 BATT OVHT
21
28-20-00 Q52A22 29 R F/W V INTRAN
28-20-00 Q53A22 12 R F/W V CLSD
28-20-00 Q34A22 28 R FUEL PUMP
73-30-00 E358A22 11 R FUEL PRESS
73-30-00 E359A22 27 R FUEL FILTER
28-20-00 Q73C22 26 XFEED INTRAN
28-41-00 E9A22 15 R LOW FUEL
24-30-00 P67E22 9 BUS DISC
24-30-00 P108C22 25 R GEN
24-20-00 X17C22 8 SEC INV
23 HYD PRESS
G65A22 50 OUT | INV N.1
G22A22 17 IN
27-50-00 C8B22 24 FLAP SYNC
6 OIL COOLING
H284A22 47 OUT | INV N.4
79-20-00 Q4B22 32 IN
61-41-00 E209A22 7 R PROP PITCH
21-31-00 H271A22 10 DOOR SEAL
61-20-00 K11A22 30 R AUTOFEATHER
30-80-00 H284B22 31 R FWD WG A/ICE
H284A22 48 OUT | INV N.2
30-12-00 H282B22 33 IN
30-11-00 H116A22 22 R MN WG A/ICE
30-80-00 H116D22
79-20-00 H246A22 14 R ENG/OIL A/I
30-80-00 H246C22
33-40-00 L20B22 13 LTS DOOR OPEN
W109A22N 38
W110A22N 39
W111A22N 40
P11
INV N.7 IN 39
OUT 41
INV N.8 IN 40
OUT 42
L FIRE BOT SW 44 W57A22 26-20-00
L FIRE 6 W7C22 26-10-00
L OIL PRESS 13 E113A22 79-31-00
L BLEED TEMP 7 H312A22 21-10-00
L MN WG OVHT 23 H109A22 30-11-00
L FD WG OVHT 30 H58B22 30-12-00
INV N.6 IN 36 H175B22 30-40-00
OUT 38
L WSHLD ZONE 29 H177A22
BAG DOOR 9 W20A22 52-70-00
DUCT TEMP 25 H311A22 21-20-00
CAB PRESS 8 H255A22 21-31-00
24
L F/W V INTRAN 18 Q60A22 28-20-00
L F/W V CLSD 16 Q59A22 28-20-00
L FUEL PUMP 34 Q48A22 28-20-00
L FUEL PRESS 50 E361A22 73-30-00
L FUEL FILTER 19 E360A22 73-30-00
FUEL XFEED 2 Q72C22 28-20-00
L LOW FUEL 10 E102A22 28-41-00
BAT TEMP 17 D5A22 31-60-00
L GEN 33 P117C22 24-30-00
PRI INV 49 X10C22 24-20-00
AVCS FAN FAIL 1 FD358A22 21-51-00
ADC FAIL 4 FA7B22 34-12-00
STALL FAIL 5 F37B22 27-32-00
L PROP PITCH 3 E210A22 61-41-00
AUTOFEATHER 20 K24B22 61-20-00
L AUTOFEATHER 31 K12A22 61-20-00
INV N.5 IN 35 H285B22 30-12-00
OUT 37
L FWD WG A/ICE 32 H281A22
H281B22 30-80-00
H115D22 30-80-00
L MN WG A/ICE 22 H115A22 30-11-00
L ENG/OIL A/I 15 H245A22 79-20-00
H245C22 30-80-00
EXT POWER 14 P105C22 24-30-00
11 W101B22
12 W103A22
45 W104A22
46 W105A22
48 W106A22
47 W107A22
JHB
G23
W108B22
E31
ESSENTIAL BUS
5
H
CB115
ANN LTS
P131
G23
K
W102A22N
E29
WARNING
CAUTION
A B C D E F
P260
W103A22
W171A22
W105A22
W170A22
W107A22
W173A22
W174A22
W175A22
W176A22
W178A22
W179A22
W181A22
W184A22N
SP1539
SP1538
SP1537
SP1502
SP1503
G24
A
E25
S70
P80
W108B22
1 THIS CONNECTION ONLY WHEN THE MULTISENSOR AREA NAVIGATION SYSTEMS (OPTIONAL EQUIPMENT) ARE NOT INSTALLED
2 DUAL MASTER ARRANGEMENT
3 DUAL MASTER ARRANGEMENT
4 DUAL MASTER ARRANGEMENT

WM_315000BM

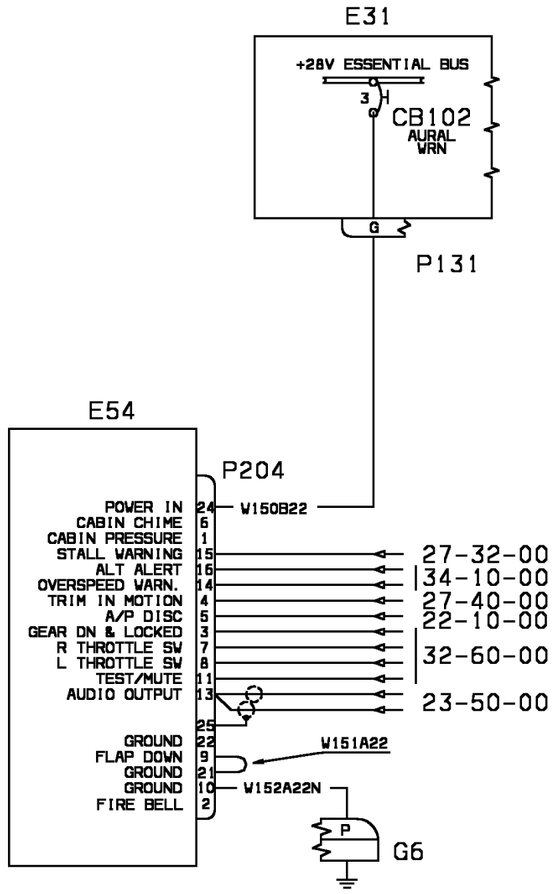


WM_315100AA

| EFFECTIVITY: | CENTRAL WARNING SYSTEMS<br>Aural Warning System |
|---|---|

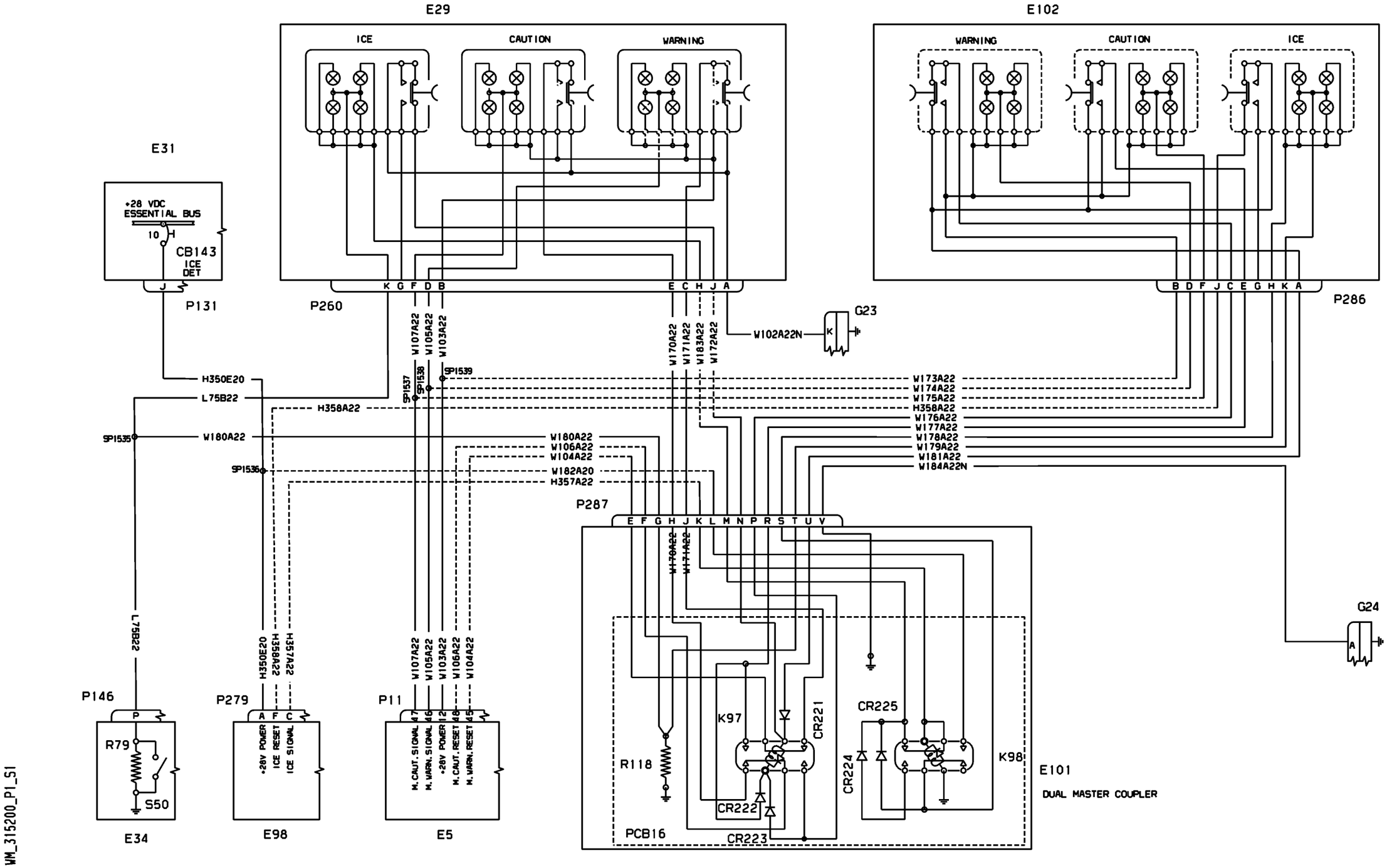


WM_315200_P1_S1

| EFFECTIVITY: | CENTRAL WARNING SYSTEMS<br>Dual Master Annunciator (optional) |
|---|---|

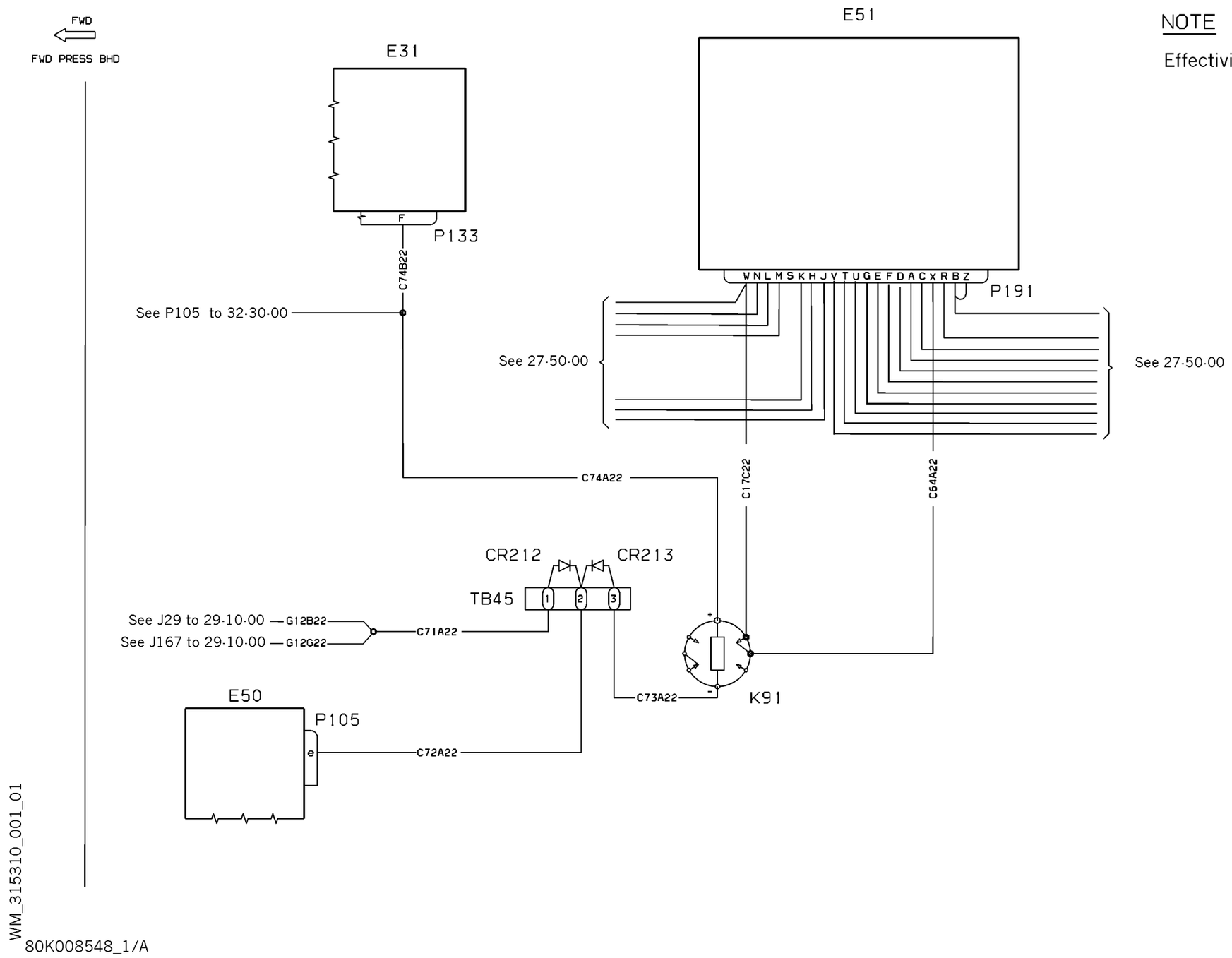


NOTE

Effectivity : only for Canandian A/C

| EFFECTIVITY: | CENTRAL WARNING SYSTEMS<br>Aural Warning Modification |
|---|---|

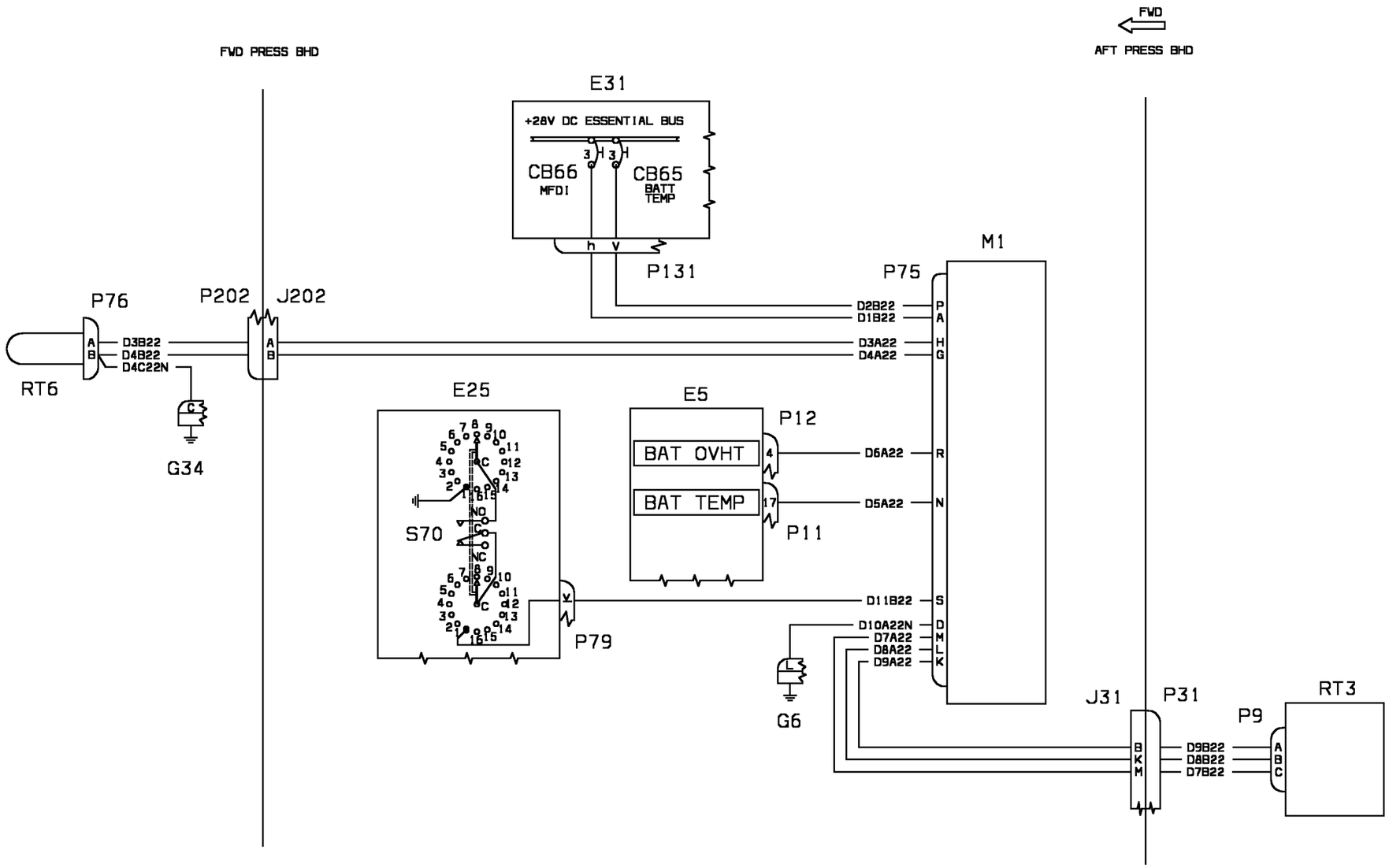
FWD
AFT PRESS BHD
FWD PRESS BHD
E31
+28V DC ESSENTIAL BUS
CB66
MFDI
CB65
BATT
TEMP
P131
M1
P75
P76
P202
J202
D2B22
D1B22
D3B22
D4B22
D4C22N
D3A22
D4A22
RT6
G34
E25
E5
P12
BAT OVHT
BAT TEMP
D6A22
D5A22
P11
S70
D11B22
D10A22N
D7A22
D8A22
D9A22
P79
G6
J31
P31
P9
RT3
D9B22
D8B22
D7B22

WM_316000AA

CHAPTER 32 - LANDING GEAR
LIST OF EFFECTIVE PAGES

| CHAPTER SECTION SUBJECT | PAGE | SHEET | DATE |
|---|---|---|---|
| 32 - LOEP | 1 | | Oct. 30/09 |
| | 2 | | Oct. 30/09 |
| 32 - TOC | 1 | | Oct. 30/09 |
| | 2 | | Oct. 30/09 |
| 32-30-00 | 1 | | Oct. 30/09 |
| 32-43-00 | 1 | | Oct. 30/09 |
| 32-51-00 | 1 | 1 | Oct. 30/09 |
| 32-51-00 | 1 | 2 | Oct. 30/09 |
| 32-51-00 | 2 | 1 | Oct. 30/09 |
| 32-51-00 | 2 | 2 | Oct. 30/09 |
| 32-60-00 | 1 | 1 | Oct. 30/09 |
| 32-60-00 | 1 | 2 | Oct. 30/09 |

INTENTIONALLY LEFT BLANK

CHAPTER 32 - LANDING GEAR
TABLE OF CONTENTS


| SUBJECT | CHAPTER SECTION SUBJECT | PAGE | SHEET |
|---|---|---|---|
| EXTENSION AND RETRACTION | | | |
| Extension And Retraction Control | 32-30-00 | 1 | |
| WHEELS AND BRAKES | | | |
| Anti-skid (Optional) | 32-43-00 | 1 | |
| STEERING | | | |
| Nose Wheel Steering | 32-51-00 | 1 | 1 |
| Nose Wheel Steering | 32-51-00 | 1 | 2 |
| Nose Wheel Steering | 32-51-00 | 2 | 1 |
| Nose Wheel Steering | 32-51-00 | 2 | 2 |
| POSITION AND WARNING | | | |
| Gear Indicating And Warning | 32-60-00 | 1 | 1 |
| Gear Indicating And Warning | 32-60-00 | 1 | 2 |

INTENTIONALLY LEFT BLANK

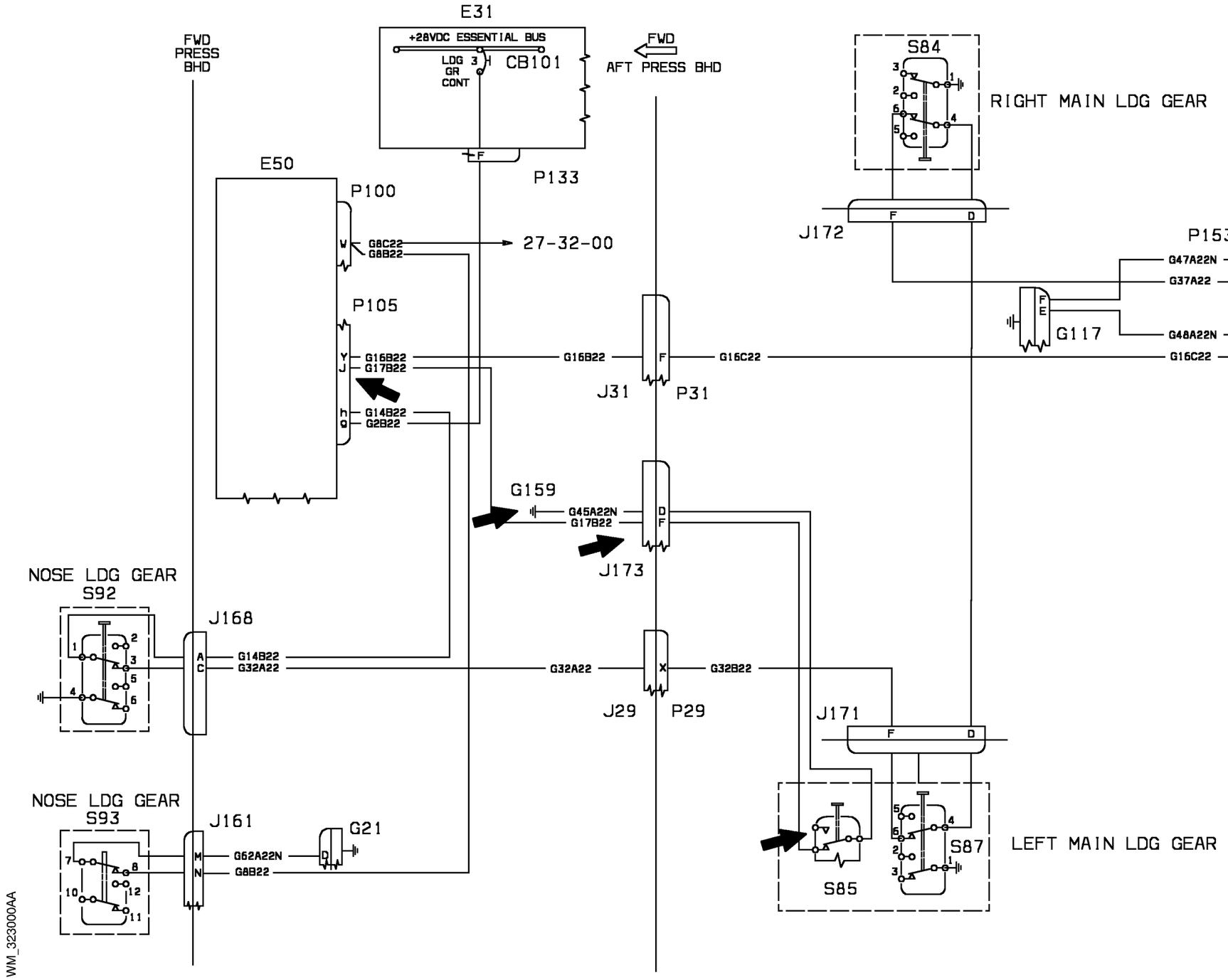


| EFFECTIVITY: | EXTENSION AND RETRACTION<br>Extension And Retraction Control |
|---|---|

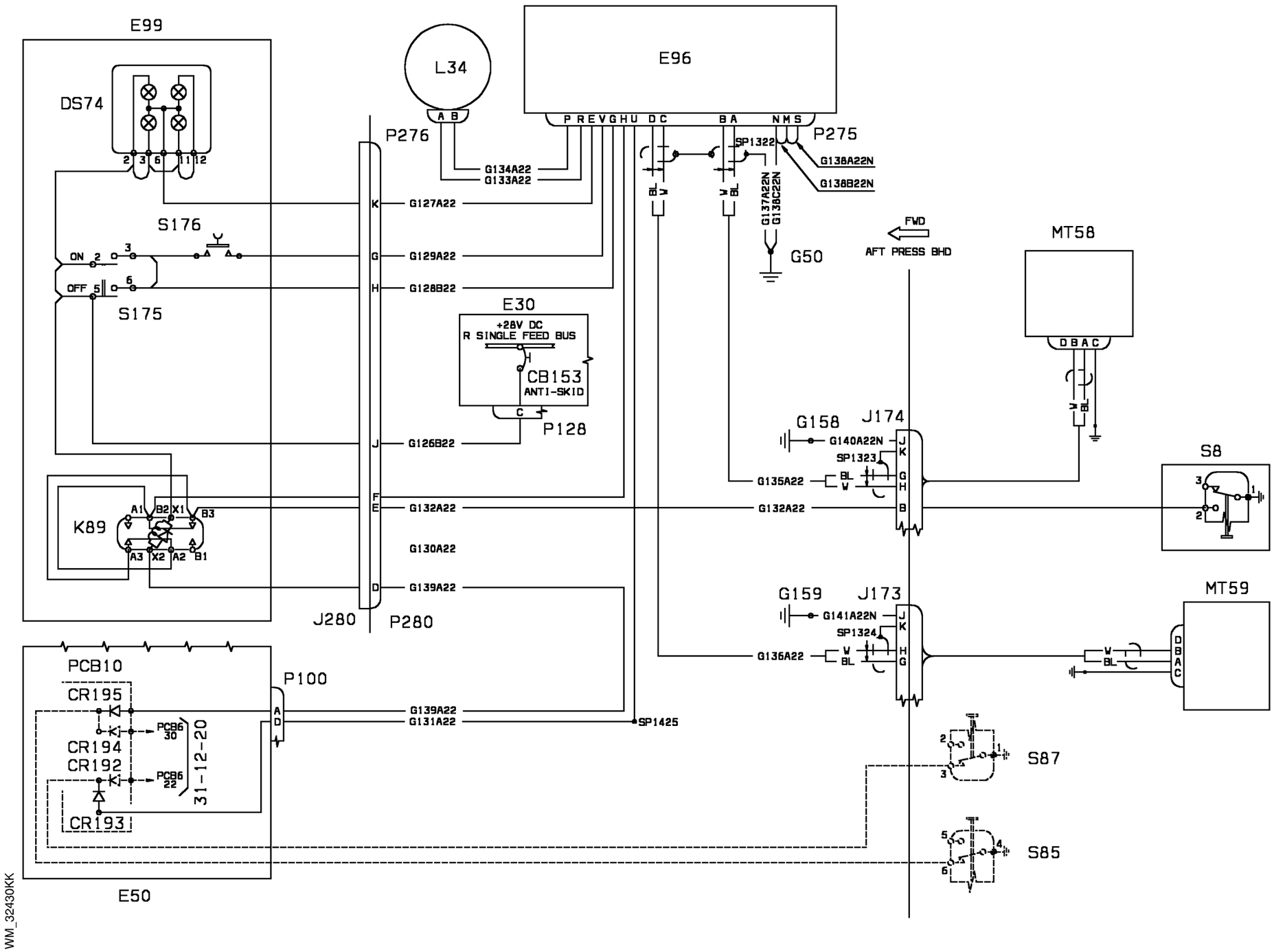


| EFFECTIVITY: | WHEELS AND BRAKES<br>Anti-skid (Optional) |
|---|---|

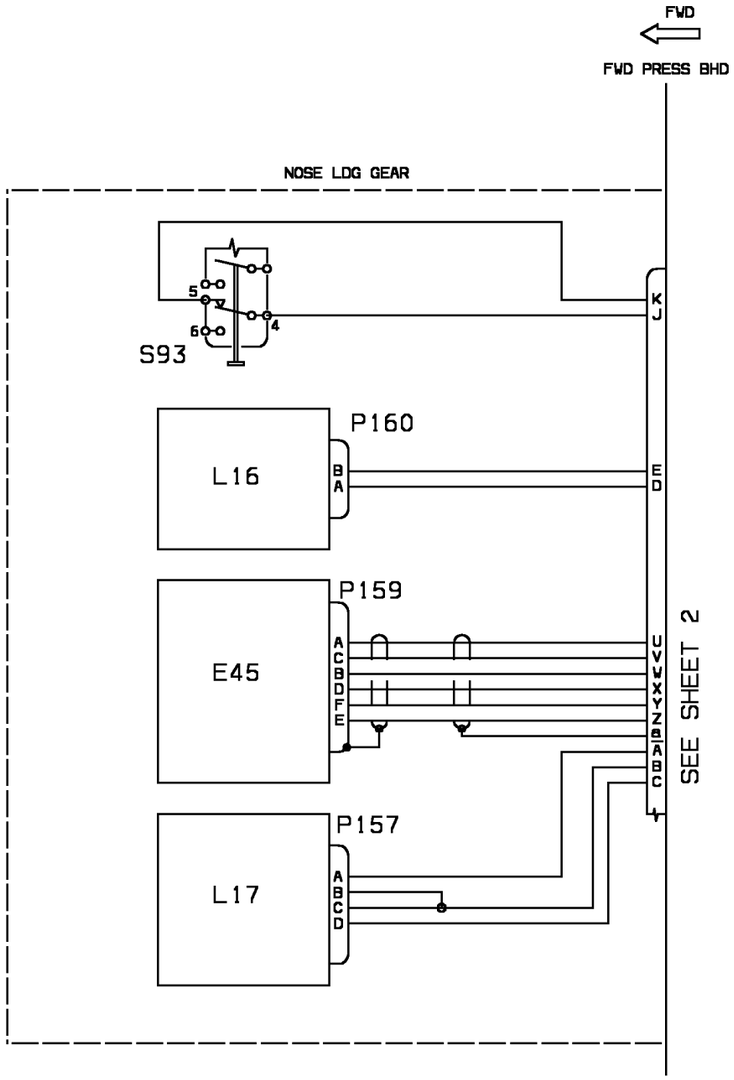


NOTE: AS PER S.B.80-0073 (RECOMENDED) E45 FEEDBACK POTENTIOMETER P/N 100006632 HAS BEEN REPLACED BY P/N 100006634 (MODIFIED FROM THE OLD P/N 100006632) OR BY NEW P/N 100006635

WM_325100AQ1

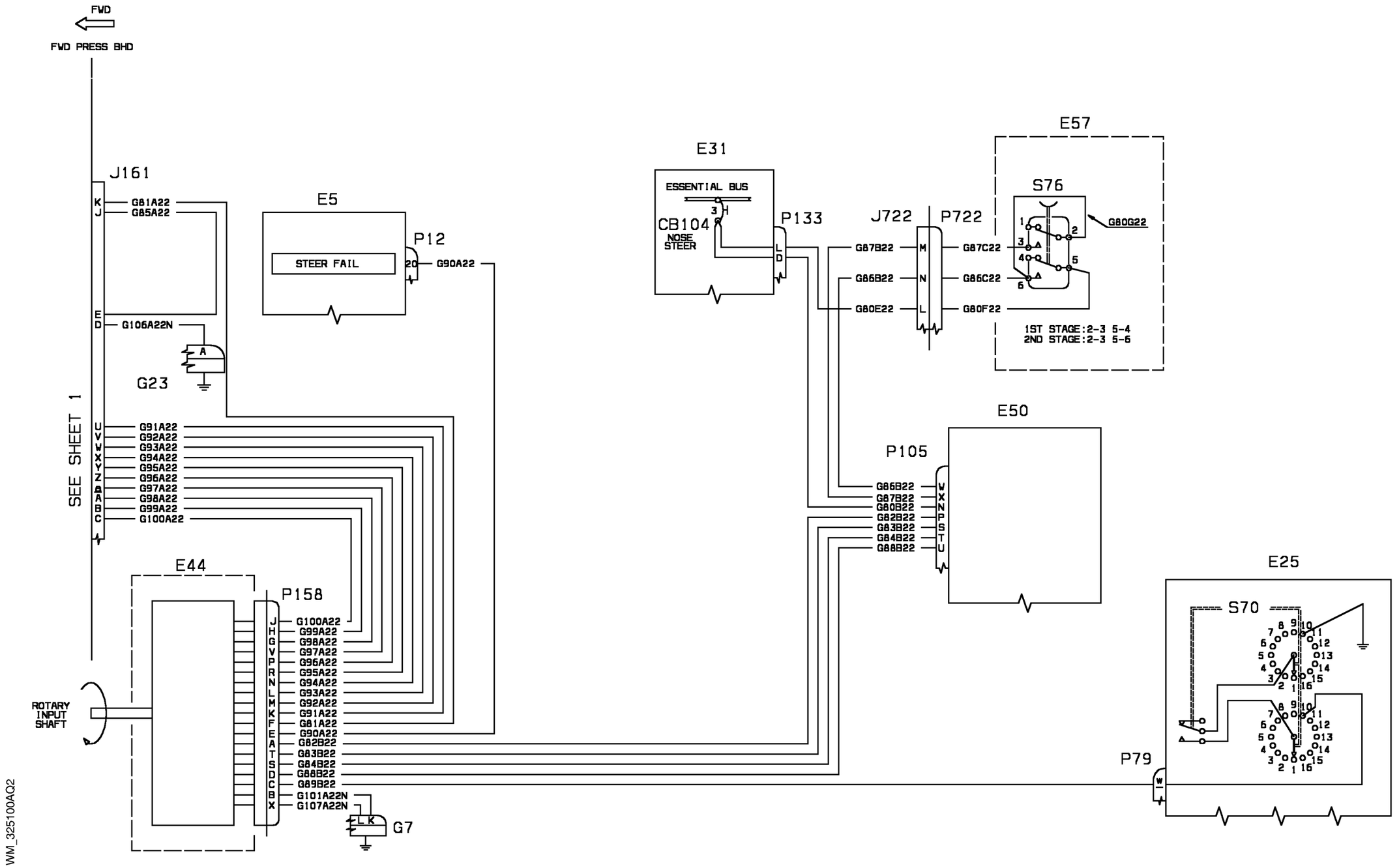


| EFFECTIVITY: 1004-1018 | STEERING Nose Wheel Steering |
|---|---|

**32-51-00**

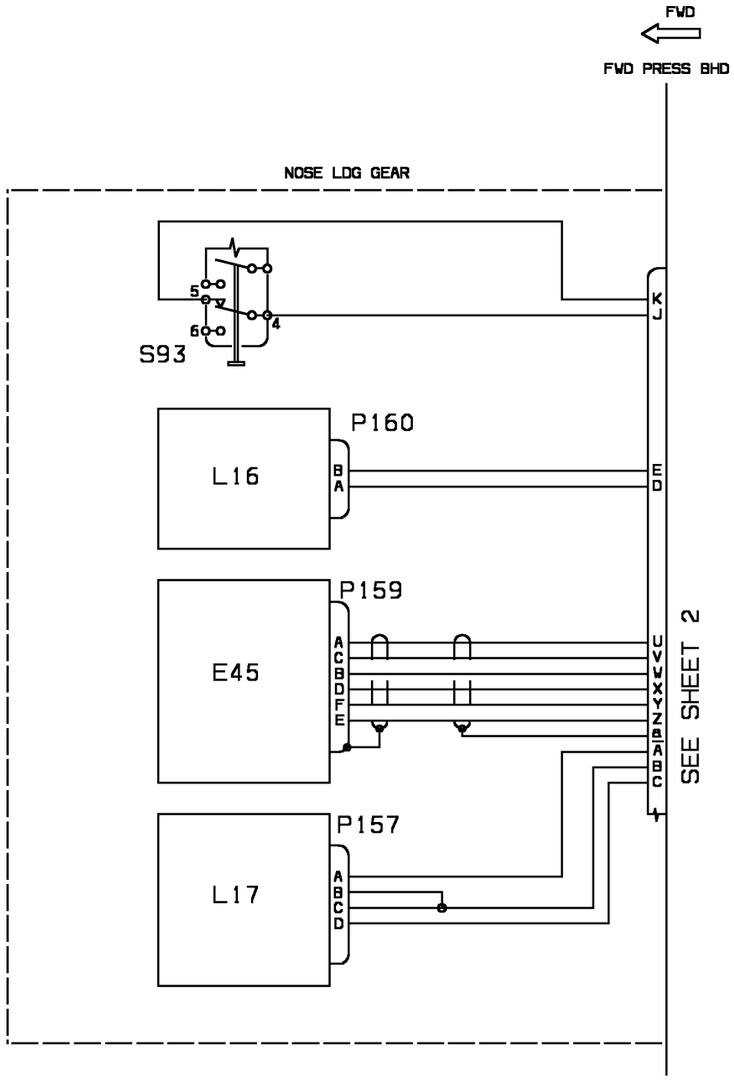


NOTE: AS PER S.B.80-0073 (RECOMENDED) E45 FEEDBACK POTENTIOMETER P/N 100006632 HAS BEEN REPLACED BY P/N 100006634 (MODIFIED FROM THE OLD P/N 100006632) OR BY NEW P/N 100006635

WM_325100AR1

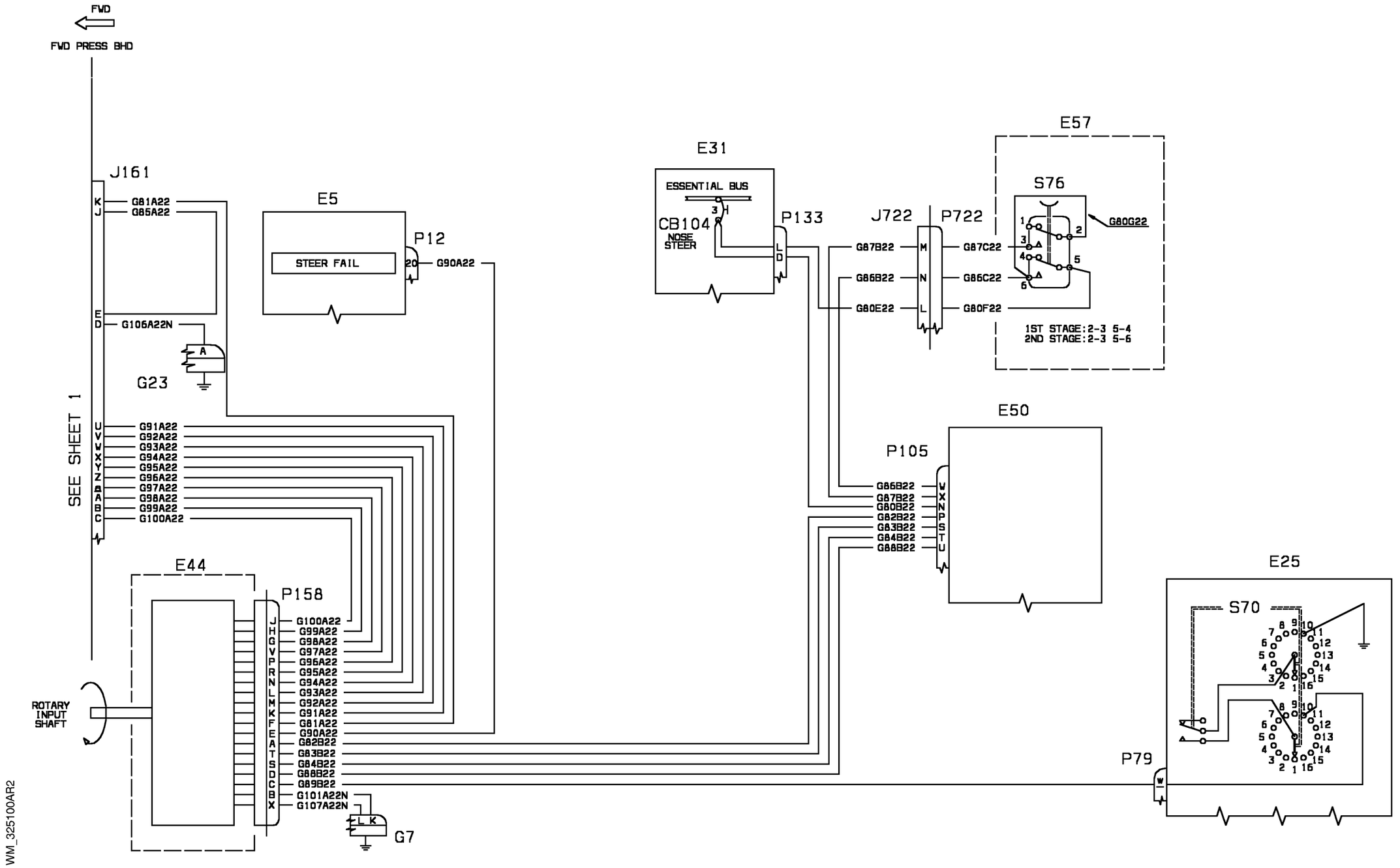
FWD
FWD PRESS BHD
J161
K G81A22
J G85A22
E5
STEER FAIL
P12
20 G90A22
E D G106A22N
A
G23
SEE SHEET 1
U G91A22
V G92A22
W G93A22
X G94A22
Y G95A22
Z G96A22
a G97A22
A G98A22
B G99A22
C G100A22
E44
P158
J G100A22
H G99A22
G G98A22
V G97A22
P G96A22
R G95A22
N G94A22
L G93A22
M G92A22
K G91A22
F G81A22
E G90A22
A G82B22
T G83B22
S G84B22
D G88B22
C G89B22
B G101A22N
X G107A22N
ROTARY INPUT SHAFT
L K
G7
WM_325100AR2
E31
ESSENTIAL BUS
3
CB104
NOSE STEER
P133
L G87B22
D G86B22
G80E22
J722
P722
M G87C22
N G86C22
L G80F22
E57
S76
1
2
3
4
5
6
G80G22
1ST STAGE:2-3 5-4
2ND STAGE:2-3 5-6
E50
P105
G86B22 W
G87B22 X
G80B22 N
G82B22 P
G83B22 S
G84B22 T
G88B22 U
E25
S70
P79
W

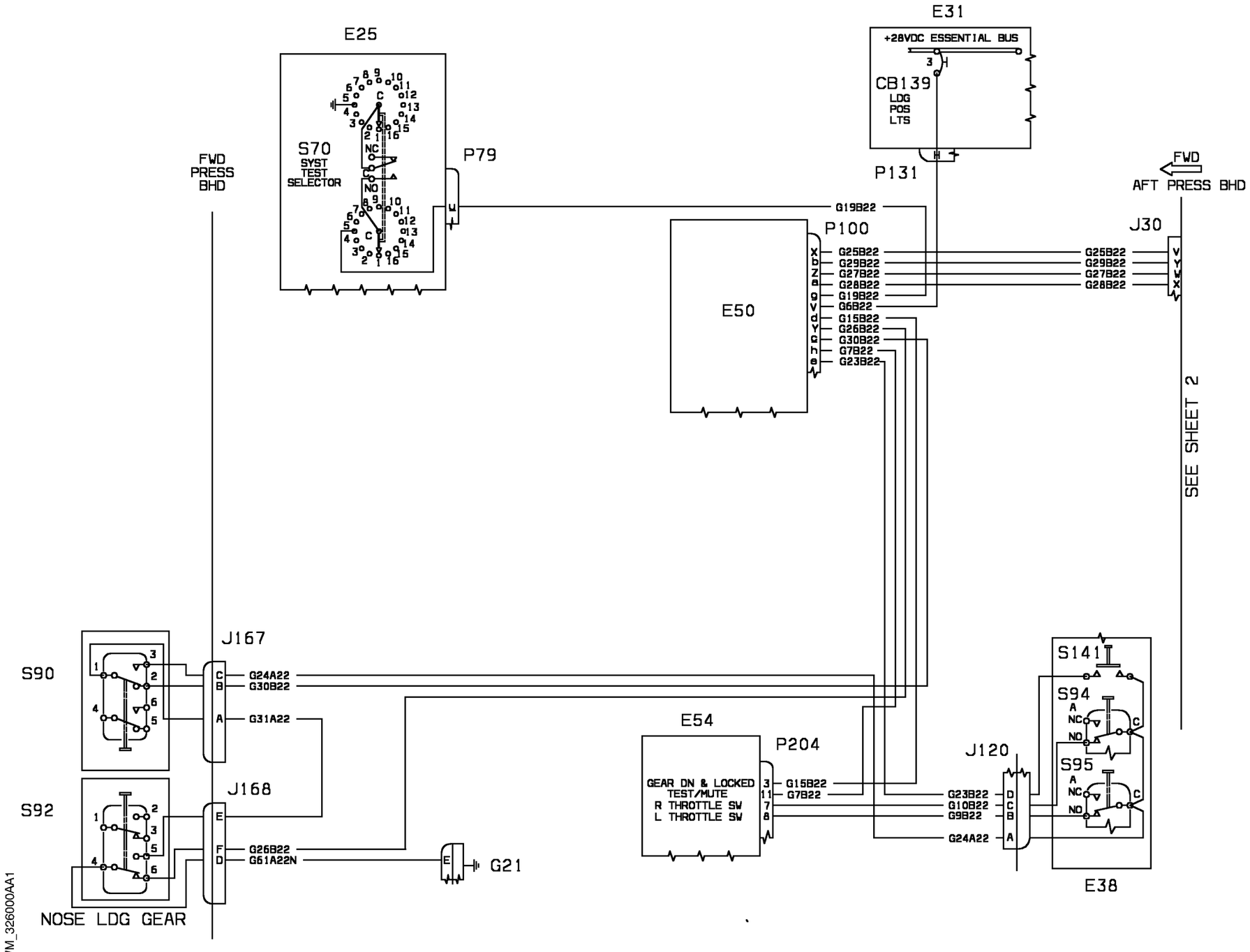


| EFFECTIVITY: | POSITION AND WARNING<br>Gear Indicating And Warning |
|---|---|

**32-60-00**

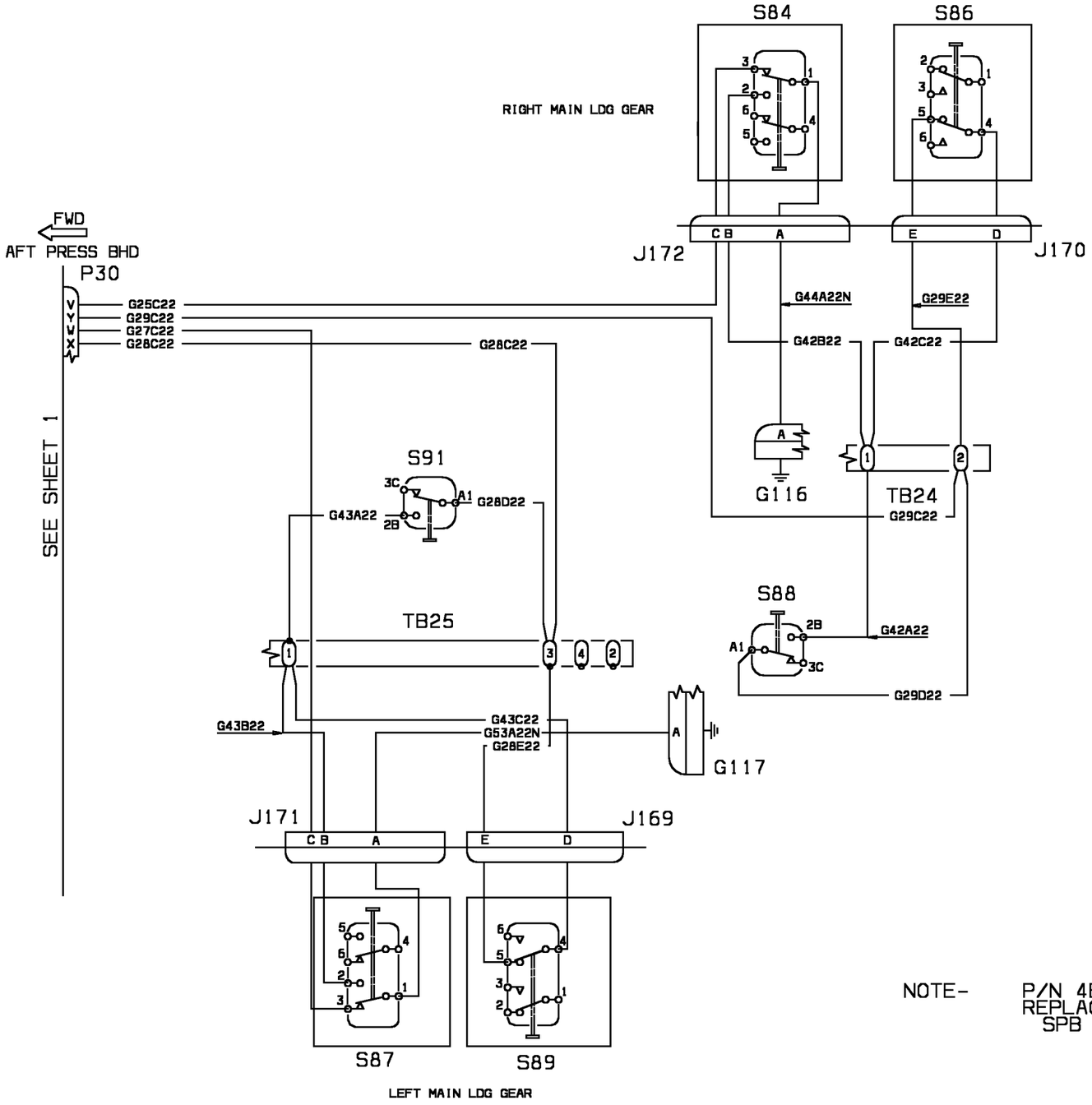


NOTE- P/N 4BR/260 MICROSWITCH REPLACED P/N MK4BR AS PER SPB 80-0012

WM_326000AA2

CHAPTER 33 - LIGHTS
LIST OF EFFECTIVE PAGES

| CHAPTER SECTION SUBJECT | PAGE | SHEET | DATE |
|---|---|---|---|
| 33 - LOEP | 1 | | Mar. 19/12 |
| | 2 | | Mar. 19/12 |
| | 3 | | Mar. 19/12 |
| | 4 | | Mar. 19/12 |
| 33 - TOC | 1 | | Mar. 19/12 |
| | 2 | | Mar. 19/12 |
| | 3 | | Mar. 19/12 |
| | 4 | | Mar. 19/12 |
| 33-10-10 | 1 | 1 | Oct. 30/09 |
| 33-10-10 | 1 | 2 | Oct. 30/09 |
| 33-10-10 | 1 | 3 | Oct. 30/09 |
| 33-10-10 | 1 | 4 | Oct. 30/09 |
| 33-10-10 | 2 | 1 | Oct. 30/09 |
| 33-10-10 | 2 | 2 | Oct. 30/09 |
| 33-10-10 | 2 | 3 | Oct. 30/09 |
| 33-10-10 | 2 | 4 | Oct. 30/09 |
| 33-10-10 | 3 | 1 | June 30/10 |
| 33-10-10 | 3 | 2 | Oct. 30/09 |
| 33-10-10 | 3 | 3 | Oct. 30/09 |
| 33-10-10 | 3 | 4 | Oct. 30/09 |
| 33-10-20 | 1 | 1 | Oct. 30/09 |
| 33-10-20 | 1 | 2 | Oct. 30/09 |
| 33-10-20 | 2 | 1 | Oct. 30/09 |
| 33-10-20 | 2 | 2 | Oct. 30/09 |
| 33-10-20 | 3 | 1 | Oct. 30/09 |
| 33-10-20 | 3 | 2 | Oct. 30/09 |
| 33-12-00 | 1 | 1 | Oct. 30/09 |
| 33-12-00 | 1 | 2 | Oct. 30/09 |
| 33-12-10 | 1 | 1 | Oct. 30/09 |
| 33-12-10 | 1 | 2 | Oct. 30/09 |
| 33-12-10 | 2 | 1 | June 30/10 |
| 33-12-10 | 2 | 2 | June 30/10 |
| 33-12-10 | 3 | 1 | June 30/10 |
| 33-12-10 | 3 | 2 | June 30/10 |
| 33-12-30 | 1 | 1 | Oct. 30/09 |
| 33-12-30 | 1 | 2 | Oct. 30/09 |

*Continued on the next page*

| CHAPTER SECTION SUBJECT | PAGE | SHEET | DATE |
|---|---|---|---|
| 33-12-40 | 1 | 1 | Oct. 30/09 |
| 33-12-40 | 1 | 2 | Oct. 30/09 |
| 33-12-40 | 2 | 1 | Oct. 30/09 |
| 33-12-40 | 2 | 2 | Oct. 30/09 |
| 33-12-40 | 3 | 1 | Oct. 30/09 |
| 33-12-40 | 3 | 2 | Oct. 30/09 |
| 33-12-40 | 4 | 1 | Oct. 30/09 |
| 33-12-40 | 4 | 2 | Oct. 30/09 |
| 33-12-40 | 5 | 1 | June 30/10 |
| 33-12-40 | 5 | 2 | June 30/10 |
| 33-12-50 | 1 | 1 | Oct. 30/09 |
| 33-12-50 | 1 | 2 | Oct. 30/09 |
| 33-12-60 | 1 | 1 | Oct. 30/09 |
| 33-12-60 | 1 | 2 | Oct. 30/09 |
| 33-13-00 | 1 | | Oct. 30/09 |
| 33-13-00 | 2 | | June 30/10 |
| 33-13-00 | 3 | | Oct. 30/09 |
| 33-13-00 | 4 | | Oct. 30/09 |
| 33-20-10 | 1 | | Oct. 30/09 |
| 33-20-10 | 2 | | Oct. 30/09 |
| 33-20-20 | 1 | | Oct. 30/09 |
| 33-20-30 | 1 | 1 | Oct. 30/09 |
| 33-20-30 | 1 | 2 | Oct. 30/09 |
| 33-20-30 | 2 | | Oct. 30/09 |
| 33-20-40 | 1 | | Oct. 30/09 |
| 33-21-10 | 1 | 1 | June 30/10 |
| 33-21-10 | 1 | 2 | June 30/10 |
| 33-21-10 | 2 | | Oct. 30/09 |
| 33-21-10 | 3 | | Oct. 30/09 |
| 33-21-20 | 1 | 1 | Oct. 30/09 |
| 33-21-20 | 1 | 2 | Oct. 30/09 |
| 33-21-20 | 2 | | Oct. 30/09 |
| 33-21-40 | 1 | 1 | Oct. 30/09 |
| 33-21-40 | 1 | 2 | Oct. 30/09 |
| 33-21-50 | 1 | 1 | June 30/10 |
| 33-21-50 | 1 | 2 | June 30/10 |
| 33-21-50 | 1 | 3 | June 30/10 |
| 33-21-50 | 2 | 1 | June 30/10 |
| 33-21-50 | 2 | 2 | June 30/10 |
| 33-21-50 | 3 | 1 | Oct. 30/09 |
| 33-21-50 | 3 | 2 | Oct. 30/09 |

*Continued on the next page*

| CHAPTER SECTION SUBJECT | PAGE | SHEET | DATE |
|---|---|---|---|
| 33-21-50 | 4 | | Oct. 30/09 |
| 33-21-60 | 1 | | Oct. 30/09 |
| 33-21-70 | 1 | 1 | Oct. 30/09 |
| 33-21-70 | 1 | 2 | Oct. 30/09 |
| 33-21-80 | 1 | 1 | Oct. 30/09 |
| 33-21-80 | 1 | 2 | Oct. 30/09 |
| 33-22-10 | 1 | | Oct. 30/09 |
| 33-22-10 | 2 | | Oct. 30/09 |
| 33-22-10 | 3 | 1 | Oct. 30/09 |
| 33-22-10 | 3 | 2 | Oct. 30/09 |
| 33-22-10 | 4 | 1 | Oct. 30/09 |
| 33-22-10 | 4 | 2 | Oct. 30/09 |
| 33-22-20 | 1 | | Oct. 30/09 |
| 33-22-20 | 2 | 1 | June 30/10 |
| 33-22-20 | 2 | 2 | June 30/10 |
| 33-22-40 | 1 | 1 | Oct. 30/09 |
| 33-22-40 | 1 | 2 | Oct. 30/09 |
| 33-22-50 | 1 | 1 | June 30/10 |
| 33-22-50 | 1 | 2 | June 30/10 |
| 33-22-50 | 1 | 3 | June 30/10 |
| 33-22-50 | 2 | 1 | Oct. 30/09 |
| 33-22-50 | 2 | 2 | Oct. 30/09 |
| 33-22-50 | 3 | 1 | Oct. 30/09 |
| 33-22-50 | 3 | 2 | Oct. 30/09 |
| 33-22-50 | 4 | 1 | Oct. 30/09 |
| 33-22-50 | 4 | 2 | Oct. 30/09 |
| 33-22-60 | 1 | | Oct. 30/09 |
| 33-22-70 | 1 | | Oct. 30/09 |
| 33-23-00 | 1 | | Oct. 30/09 |
| 33-23-00 | 2 | | Oct. 30/09 |
| 33-23-00 | 3 | | June 30/10 |
| 33-23-00 | 4 | | Oct. 30/09 |
| 33-23-00 | 5 | | Oct. 30/09 |
| 33-23-00 | 6 | | Oct. 30/09 |
| 33-23-00 | 7 | | Oct. 30/09 |
| 33-24-00 | 1 | | June 30/10 |
| 33-24-00 | 2 | | Oct. 30/09 |
| 33-24-00 | 3 | | June 30/10 |
| 33-24-00 | 4 | | Mar. 19/12 |
| 33-25-00 | 1 | | Oct. 30/09 |
| 33-25-00 | 2 | | Oct. 30/09 |

*Continued on the next page*

| CHAPTER<br>SECTION<br>SUBJECT | PAGE | SHEET | DATE |
|---|---|---|---|
| 33-25-00 | 3 | | June 30/10 |
| 33-25-00 | 4 | | June 30/10 |
| 33-25-00 | 5 | | Oct. 30/09 |
| 33-26-00 | 1 | | Oct. 30/09 |
| 33-26-00 | 2 | | June 30/10 |
| 33-26-00 | 3 | | Oct. 30/09 |
| 33-27-00 | 1 | | Oct. 30/09 |
| 33-27-00 | 2 | | Oct. 30/09 |
| 33-31-00 | 1 | | Oct. 30/09 |
| 33-40-00 | 1 | 1 | Oct. 30/09 |
| 33-40-00 | 1 | 2 | Oct. 30/09 |
| 33-40-00 | 1 | 3 | Oct. 30/09 |

CHAPTER 33 - LIGHTS
TABLE OF CONTENTS


| SUBJECT | CHAPTER SECTION SUBJECT | PAGE | SHEET |
|---|---|---|---|
| FLIGHT COMPARTMENT | | | |
| Instrument Panel Lights 28Volt | 33-10-10 | 1 | 1 |
| Instrument Panel Lights 28Volt | 33-10-10 | 1 | 2 |
| Instrument Panel Lights 28Volt | 33-10-10 | 1 | 3 |
| Instrument Panel Lights 28Volt | 33-10-10 | 1 | 4 |
| Instrument Panel Lights 28Volt | 33-10-10 | 2 | 1 |
| Instrument Panel Lights 28Volt | 33-10-10 | 2 | 2 |
| Instrument Panel Lights 28Volt | 33-10-10 | 2 | 3 |
| Instrument Panel Lights 28Volt | 33-10-10 | 2 | 4 |
| Instrument Panel Lights 28Volt | 33-10-10 | 3 | 1 |
| Instrument Panel Lights 28Volt | 33-10-10 | 3 | 2 |
| Instrument Panel Lights 28Volt | 33-10-10 | 3 | 3 |
| Instrument Panel Lights 28Volt | 33-10-10 | 3 | 4 |
| Instrument Panel Lights 115Volt | 33-10-20 | 1 | 1 |
| Instrument Panel Lights 115Volt | 33-10-20 | 1 | 2 |
| Instrument Panel Lights 115Volt | 33-10-20 | 2 | 1 |
| Instrument Panel Lights 115Volt | 33-10-20 | 2 | 2 |
| Instrument Panel Lights 115Volt | 33-10-20 | 3 | 1 |
| Instrument Panel Lights 115Volt | 33-10-20 | 3 | 2 |
| Cabin Lights (Option 19) | 33-12-00 | 1 | 1 |
| Cabin Lights (Option 19) | 33-12-00 | 1 | 2 |
| Cabin Lights (Opt.1) | 33-12-10 | 1 | 1 |
| Cabin Lights (Opt.1) | 33-12-10 | 1 | 2 |
| Cabin Lights (Opt.2) | 33-12-10 | 2 | 1 |
| Cabin Lights (Opt.2) | 33-12-10 | 2 | 2 |
| Cabin Lights (Opt. 1 - 2 ) | 33-12-10 | 3 | 1 |
| Cabin Lights (Opt. 1 - 2 ) | 33-12-10 | 3 | 2 |
| Cabin Lights (Opt.8) | 33-12-30 | 1 | 1 |
| Cabin Lights (Opt.8) | 33-12-30 | 1 | 2 |
| Cabin Lights (OPT.10 AMI) | 33-12-40 | 1 | 1 |
| Cabin Lights (OPT.10 AMI) | 33-12-40 | 1 | 2 |
| Cabin Lights (Opt.10 E.I.) | 33-12-40 | 2 | 1 |
| Cabin Lights (Opt.10 E.I.) | 33-12-40 | 2 | 2 |
| Cabin Lights (Opt. 10 SMA) | 33-12-40 | 3 | 1 |
| Cabin Lights (Opt. 10 SMA) | 33-12-40 | 3 | 2 |
| Cabin Lights (Opt. 10 M.M. ) | 33-12-40 | 4 | 1 |


*Continued on the next page*

| SUBJECT | CHAPTER SECTION SUBJECT | PAGE | SHEET |
|---|---|---|---|
| FLIGHT COMPARTMENT (Cont.) | | | |
| Cabin Lights (Opt. 10 M.M. ) | 33-12-40 | 4 | 2 |
| Cabin Lights Upgrade (Opt. 10 AMI ) | 33-12-40 | 5 | 1 |
| Cabin Lights Upgrade (Opt. 10 AMI ) | 33-12-40 | 5 | 2 |
| Cabin Lights (Opt. 20 ) | 33-12-50 | 1 | 1 |
| Cabin Lights (Opt. 20 ) | 33-12-50 | 1 | 2 |
| Cabin Lights (Opt. 17 ) | 33-12-60 | 1 | 1 |
| Cabin Lights (Opt. 17 ) | 33-12-60 | 1 | 2 |
| Entry/crew Lights | 33-13-00 | 1 | |
| Entry/crew Lights (Opt 10) | 33-13-00 | 2 | |
| ENTRY/CREW LIGHTS | 33-13-00 | 3 | |
| Entry/crew Lights ( Opt. 17) | 33-13-00 | 4 | |
| PASSENGER COMPARTMENT | | | |
| Circuit CTRL pwr & return (OPT 1 & 19) | 33-20-10 | 1 | |
| Circuit CTRL pwr & return (OPT 1 MM) | 33-20-10 | 2 | |
| Circuit CTRL pwr & return (OPT 2) | 33-20-20 | 1 | |
| Circuit CTRL pwr & return (OPT 10 ) | 33-20-30 | 1 | 1 |
| Circuit CTRL pwr & return (OPT 10 ) | 33-20-30 | 1 | 2 |
| Circuit CTRL pwr & return (OPT 10 MM) | 33-20-30 | 2 | |
| Circuit CTRL pwr & return (OPT 20) | 33-20-40 | 1 | |
| Switch Panel Lights (Opt.1 ) | 33-21-10 | 1 | 1 |
| Switch Panel Lights (Opt.1 ) | 33-21-10 | 1 | 2 |
| Switch Panel Lights (Opt.1) | 33-21-10 | 2 | |
| Switch Panel Lights (Opt.1 MM) | 33-21-10 | 3 | |
| Switch Panel Lights (Opt.2) | 33-21-20 | 1 | 1 |
| Switch Panel Lights (Opt.2) | 33-21-20 | 1 | 2 |
| Switch Panel Lights (Opt.2) | 33-21-20 | 2 | |
| Switch Panel Lights (Opt.8) | 33-21-40 | 1 | 1 |
| Switch Panel Lights (Opt.8) | 33-21-40 | 1 | 2 |
| Switch Panel Lights (Opt.10 AMI ) | 33-21-50 | 1 | 1 |
| Switch Panel Lights (Opt.10 AMI ) | 33-21-50 | 1 | 2 |
| Switch Panel Lights Upgrade (Opt. 10 AMI) | 33-21-50 | 1 | 3 |
| Switch Panel Lights (Opt.10 E.I. ) | 33-21-50 | 2 | 1 |
| Switch Panel Lights (Opt.10 E.I. ) | 33-21-50 | 2 | 2 |
| Switch Panel Lights (Opt.10 SMA ) | 33-21-50 | 3 | 1 |
| Switch Panel Lights (Opt.10 SMA ) | 33-21-50 | 3 | 2 |
| Switch Panel Lights (Opt.10 M.M. ) | 33-21-50 | 4 | |
| Switch Panel Lights (Opt.20) | 33-21-60 | 1 | |
| Switch Panel Lights (Opt.17) | 33-21-70 | 1 | 1 |


*Continued on the next page*

| SUBJECT | CHAPTER SECTION SUBJECT | PAGE | SHEET |
|---|---|---|---|
| PASSENGER COMPARTMENT (Cont.) | | | |
| Switch Panel Lights (Opt.17) | 33-21-70 | 1 | 2 |
| Switch Panel Lights | 33-21-80 | 1 | 1 |
| Switch Panel Lights | 33-21-80 | 1 | 2 |
| Read Lights (Opt.1) | 33-22-10 | 1 | |
| Read Lights (Opt.1- 19 ) | 33-22-10 | 2 | |
| Read Lights (Opt.1 - MM) | 33-22-10 | 3 | 1 |
| Read Lights (Opt.1 - MM) | 33-22-10 | 3 | 2 |
| Reading Lights | 33-22-10 | 4 | 1 |
| Reading Lights | 33-22-10 | 4 | 2 |
| Read Lights (Opt.2) | 33-22-20 | 1 | |
| Read Lights (Opt.2 ) | 33-22-20 | 2 | 1 |
| Read Lights (Opt.2 ) | 33-22-20 | 2 | 2 |
| Read Lights (Opt.8) | 33-22-40 | 1 | 1 |
| Read Lights (Opt.8) | 33-22-40 | 1 | 2 |
| Read Lights (Opt.10 AMI) | 33-22-50 | 1 | 1 |
| Read Lights (Opt.10 AMI) | 33-22-50 | 1 | 2 |
| Read Lights Upgrade (Opt. 10 AMI) | 33-22-50 | 1 | 3 |
| Read Lights (Opt.10 E.I. ) | 33-22-50 | 2 | 1 |
| Read Lights (Opt.10 E.I. ) | 33-22-50 | 2 | 2 |
| Read Lights (Opt.10 SMA ) | 33-22-50 | 3 | 1 |
| Read Lights (Opt.10 SMA ) | 33-22-50 | 3 | 2 |
| Read Lights (Opt.10 MM ) | 33-22-50 | 4 | 1 |
| Read Lights (Opt.10 MM ) | 33-22-50 | 4 | 2 |
| Read Lights (Opt. 20 ) | 33-22-60 | 1 | |
| Read Lights (Opt. 17 ) | 33-22-70 | 1 | |
| Table Lights (Opt.1 - 2) | 33-23-00 | 1 | |
| Table Lights (Opt.1 - 2) | 33-23-00 | 2 | |
| Table Lights | 33-23-00 | 3 | |
| Table Lights (Opt. 8) | 33-23-00 | 4 | |
| Table Lights (Opt.10 AMI) | 33-23-00 | 5 | |
| Table Lights (Opt.10 E.I.) | 33-23-00 | 6 | |
| Table Lights (Opt.10 SMA) | 33-23-00 | 7 | |
| Vanity Lights (Opt.1) | 33-24-00 | 1 | |
| Vanity Lights (Opt.2) | 33-24-00 | 2 | |
| Vanity Lights (Opt.10 ) | 33-24-00 | 3 | |
| Vanity Lights (Opt.17 ) | 33-24-00 | 4 | |
| Lavatory Lights | 33-25-00 | 1 | |
| Lavatory Lights (OPT 2 & 17) | 33-25-00 | 2 | |
| Lavatory Lights (Optional) | 33-25-00 | 3 | |


*Continued on the next page*

| SUBJECT | CHAPTER SECTION SUBJECT | PAGE | SHEET |
|---|---|---|---|
| PASSENGER COMPARTMENT (Cont.) | | | |
| Lavatory Lights (Optional) | 33-25-00 | 4 | |
| Lavatory Lights (Opt.20) | 33-25-00 | 5 | |
| Advisory Lights | 33-26-00 | 1 | |
| Advisory Lights | 33-26-00 | 2 | |
| Advisory Lights | 33-26-00 | 3 | |
| Stretcher LTS ( Option 17) | 33-27-00 | 1 | |
| Stretcher LTS ( Option 20) | 33-27-00 | 2 | |
| CARGO AND SERVICE COMPARTMENTS | | | |
| Baggage Lights (Optional) | 33-31-00 | 1 | |
| EXTERIOR | | | |
| External Lights | 33-40-00 | 1 | 1 |
| External Lights | 33-40-00 | 1 | 2 |
| External Lights | 33-40-00 | 1 | 3 |

WM_331010_P1_S1

80-008505_2G/F1

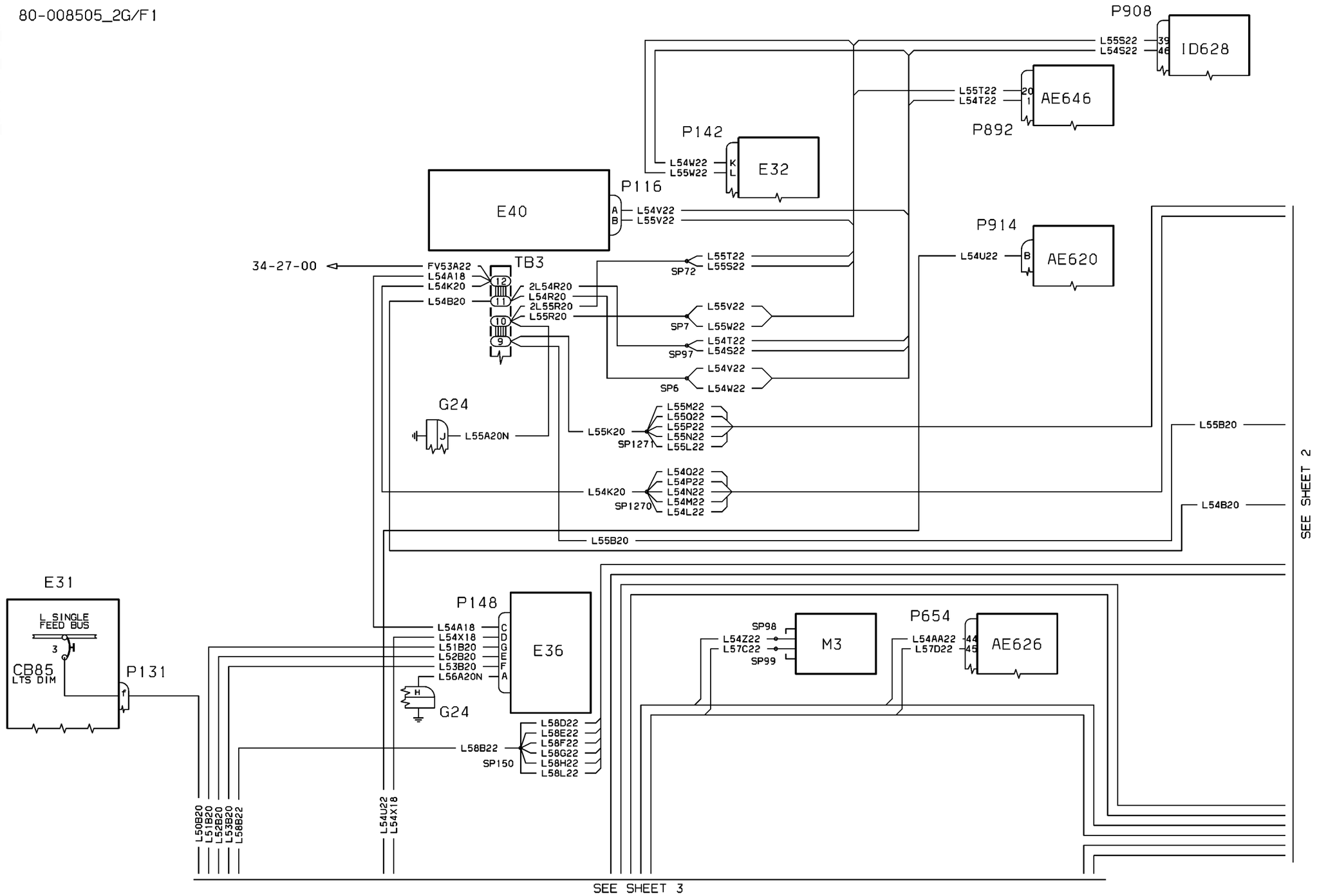


| EFFECTIVITY: | FLIGHT COMPARTMENT |
|---|---|
| 1004-1004 | Instrument Panel Lights 28Volt |

**33-10-10**

80-008505_2G/F1

WM_331010_P1_S2

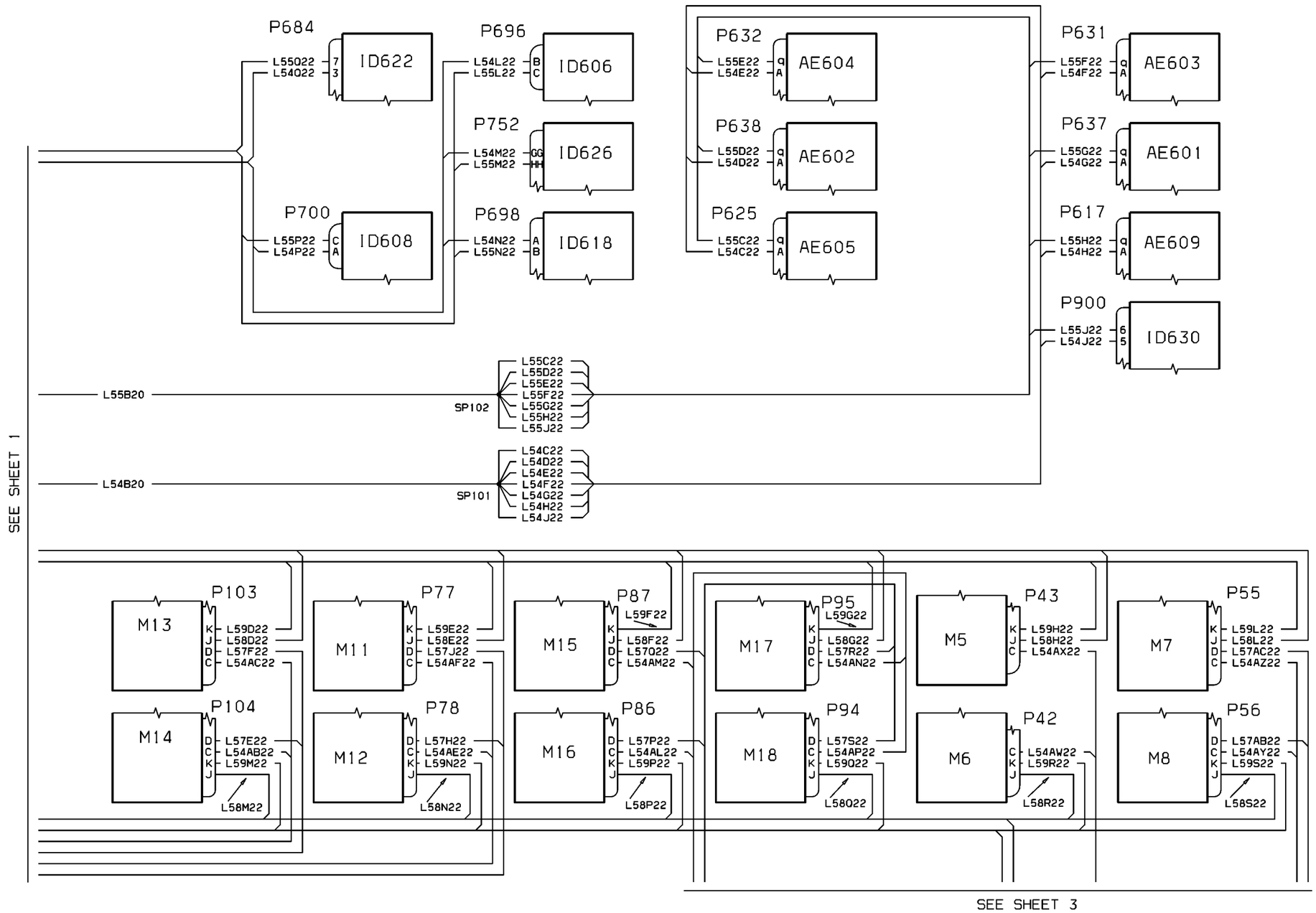


| EFFECTIVITY: | FLIGHT COMPARTMENT |
|---|---|
| 1004-1004 | Instrument Panel Lights 28Volt |

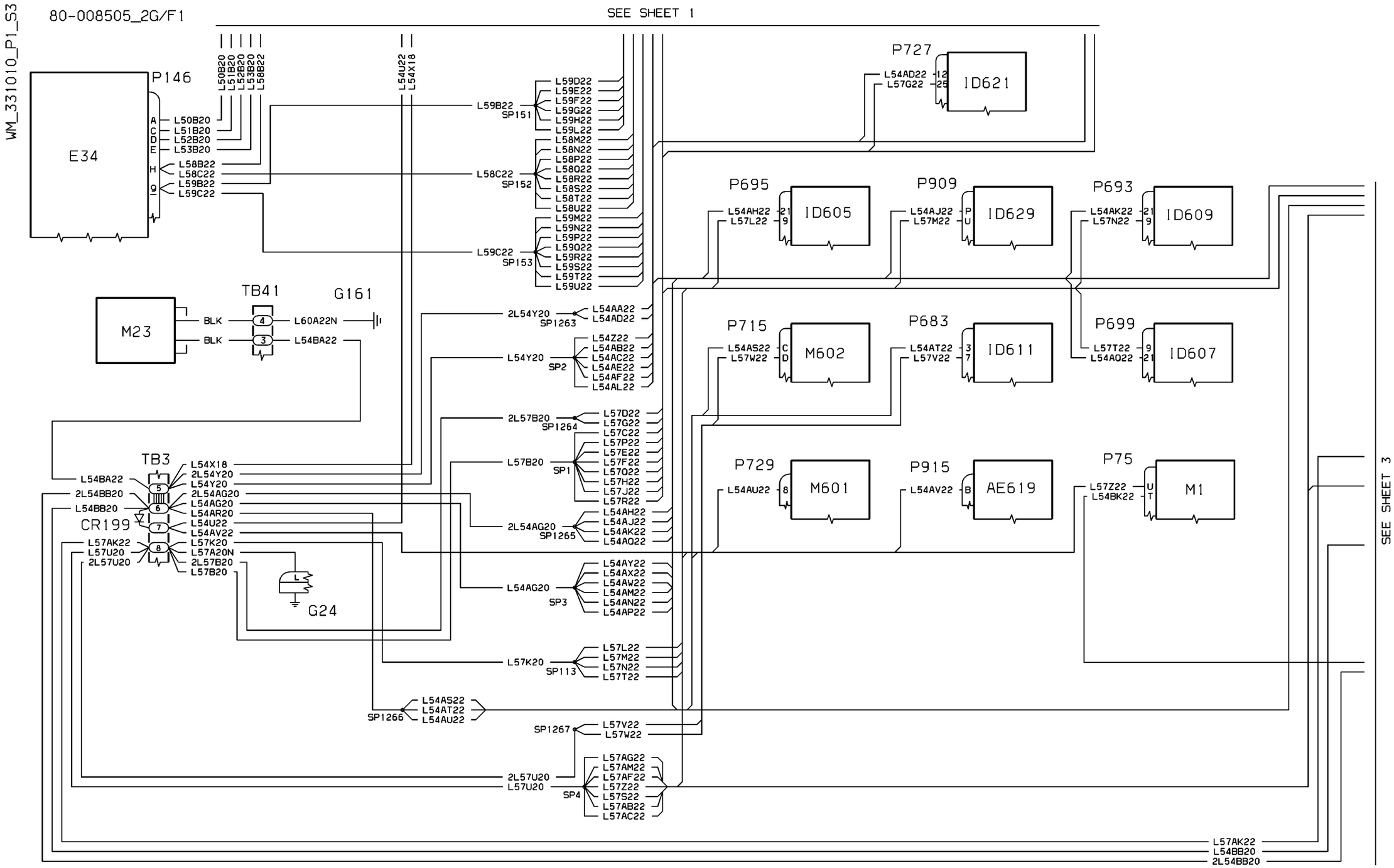


| EFFECTIVITY: | FLIGHT COMPARTMENT |
|---|---|
| 1004-1004 | Instrument Panel Lights 28Volt |

**33-10-10**

80-008505_2G/F1

WM_331010_P1_S3

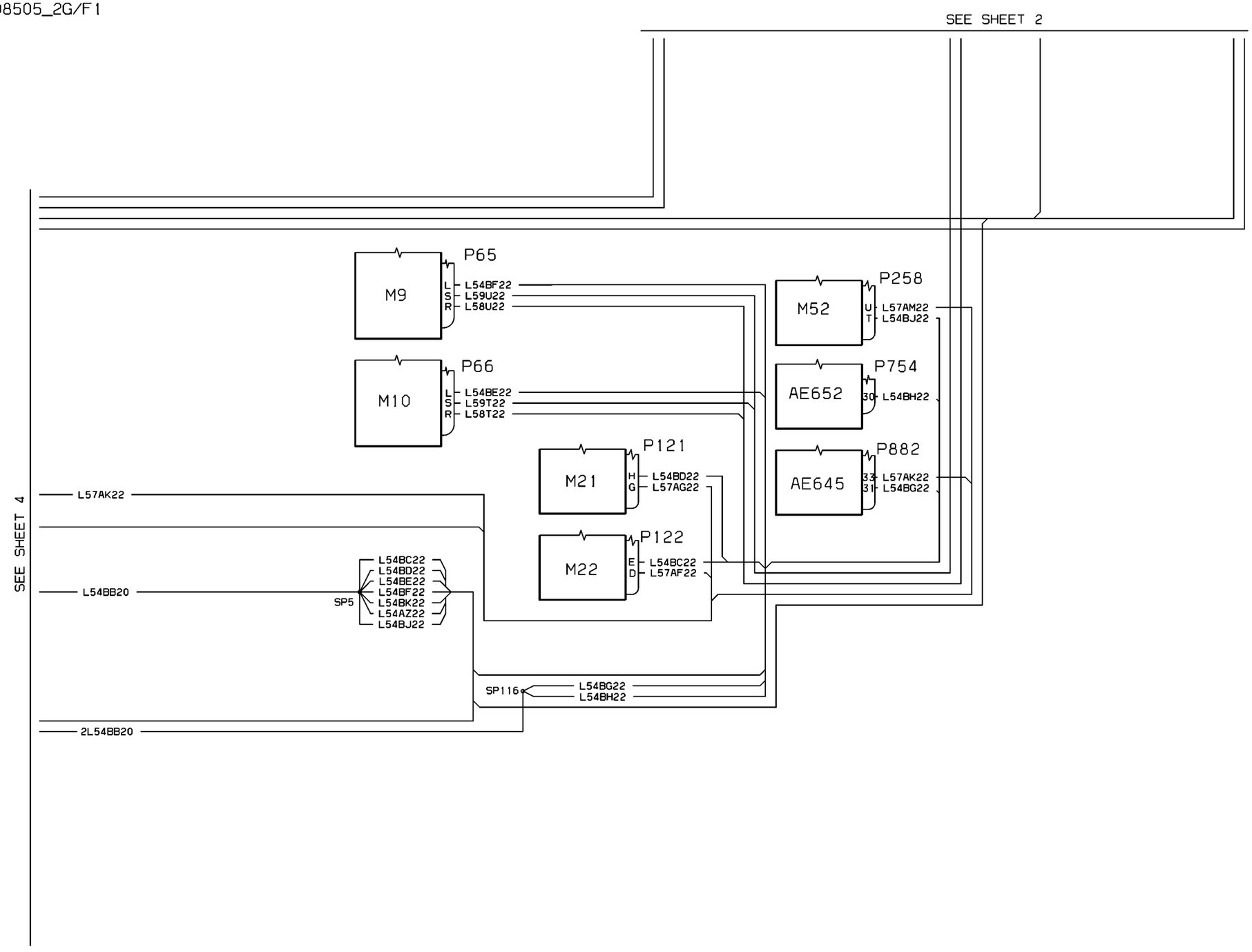


| EFFECTIVITY: | FLIGHT COMPARTMENT |
|---|---|
| 1004-1004 | Instrument Panel Lights 28Volt |

80-008505_G/F3

WM_311010_P2_S1

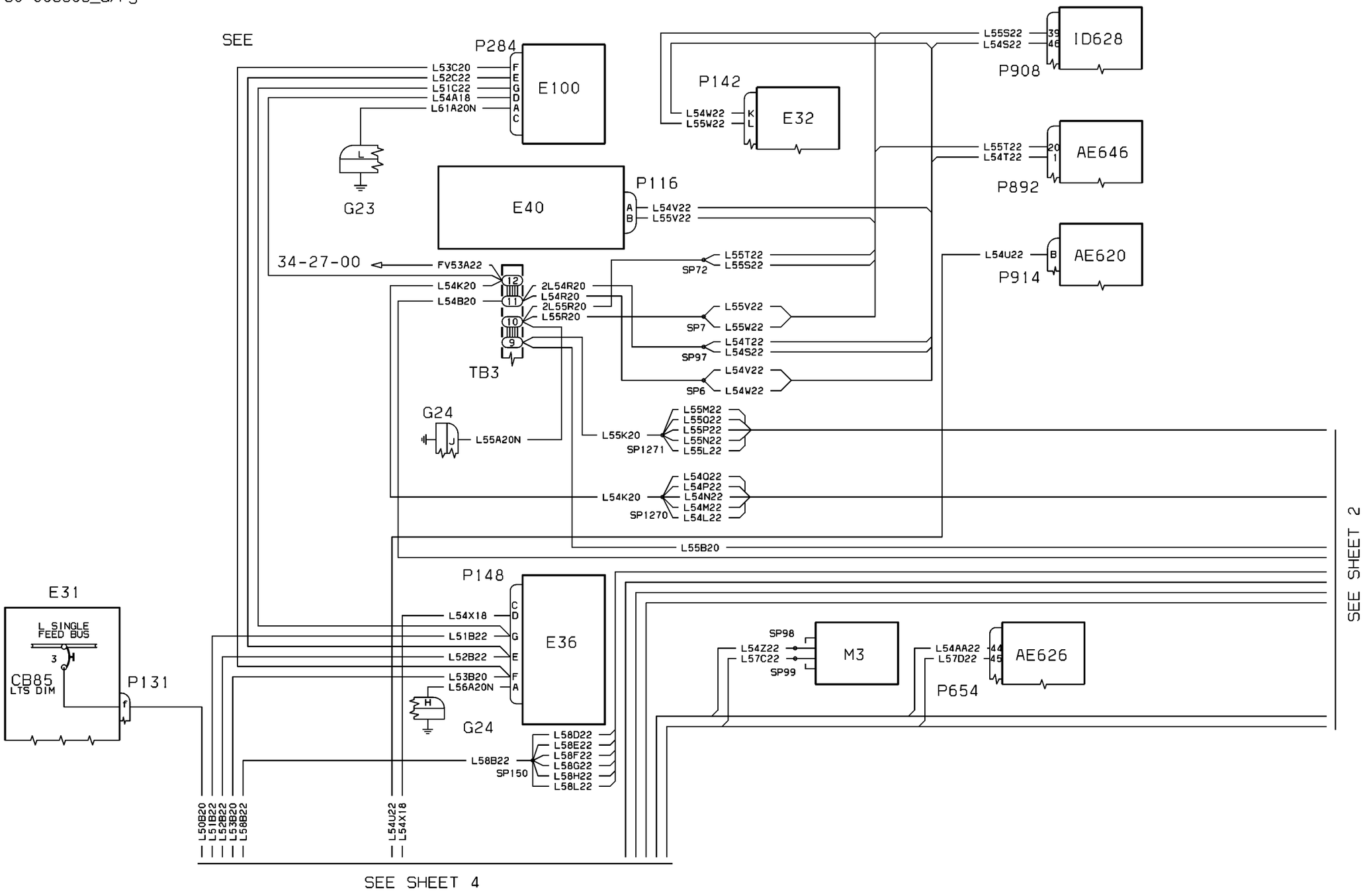


| EFFECTIVITY: 1005-1022 | FLIGHT COMPARTMENT<br>Instrument Panel Lights 28Volt |
|---|---|

**33-10-10**

WM_331010_P2_S2 80-008505_G/F3

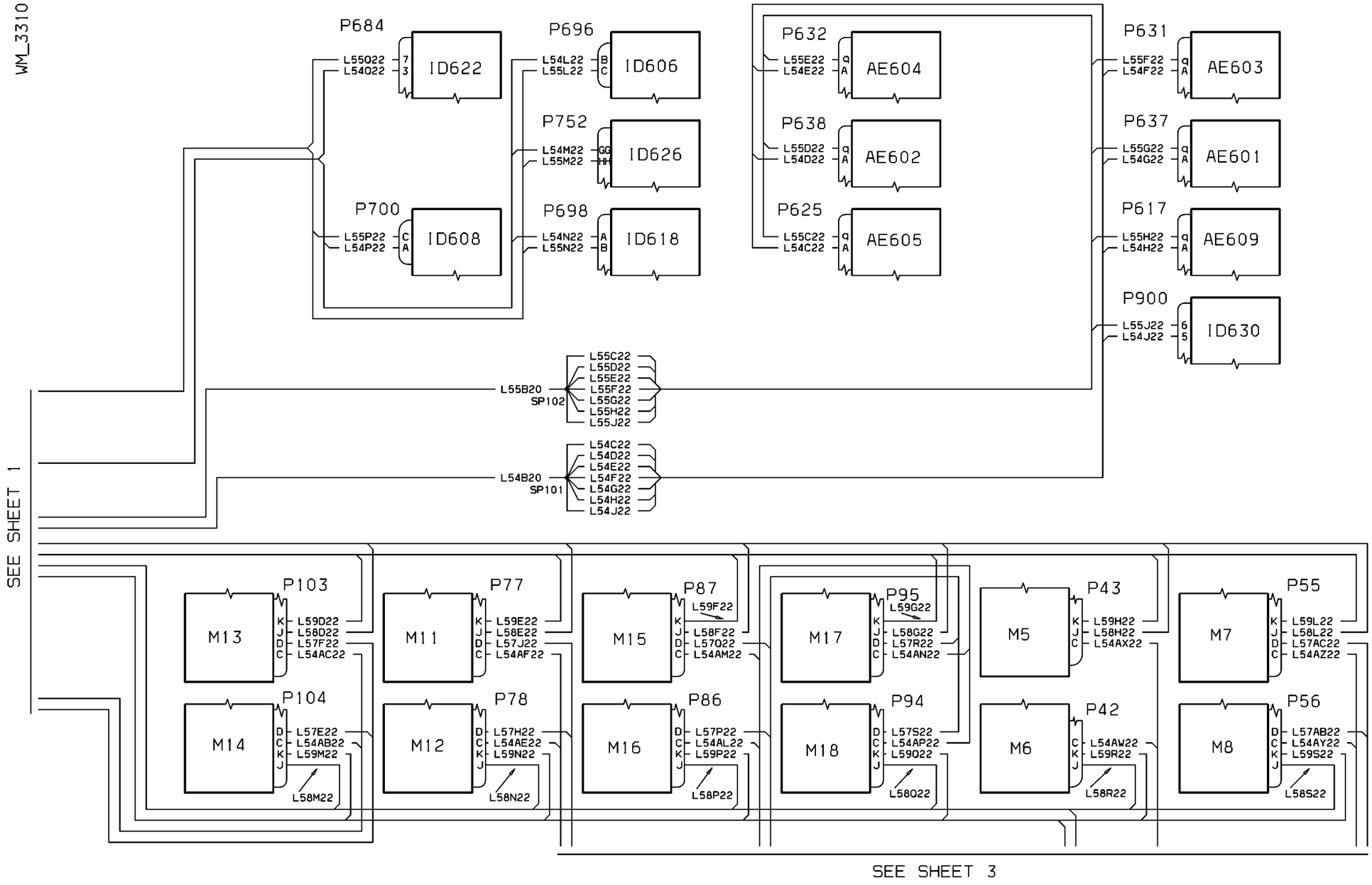

WM_331010_P2_S3 80-008505_G/F3

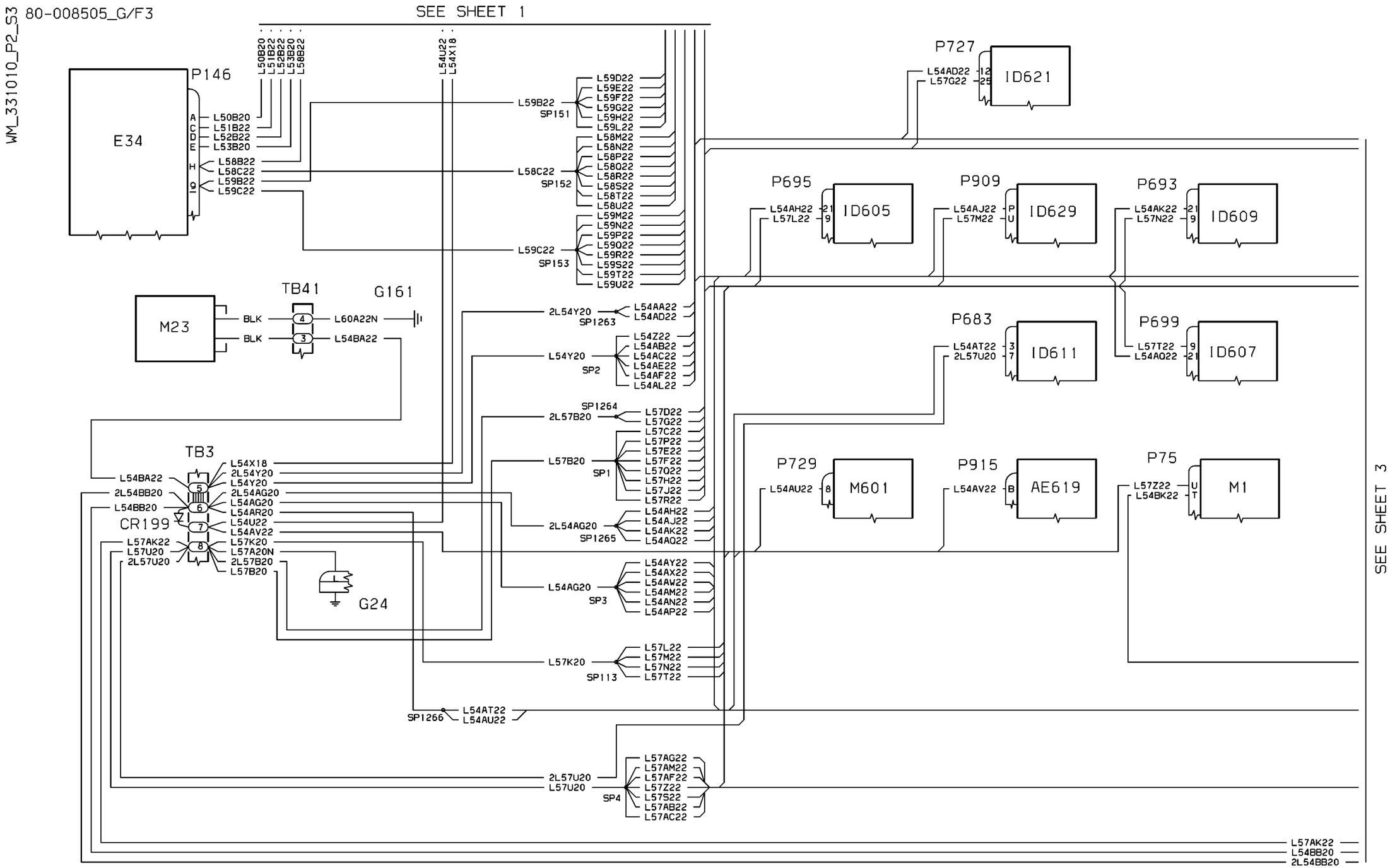

80-008505_G/F3

WM_331010_P2_S4

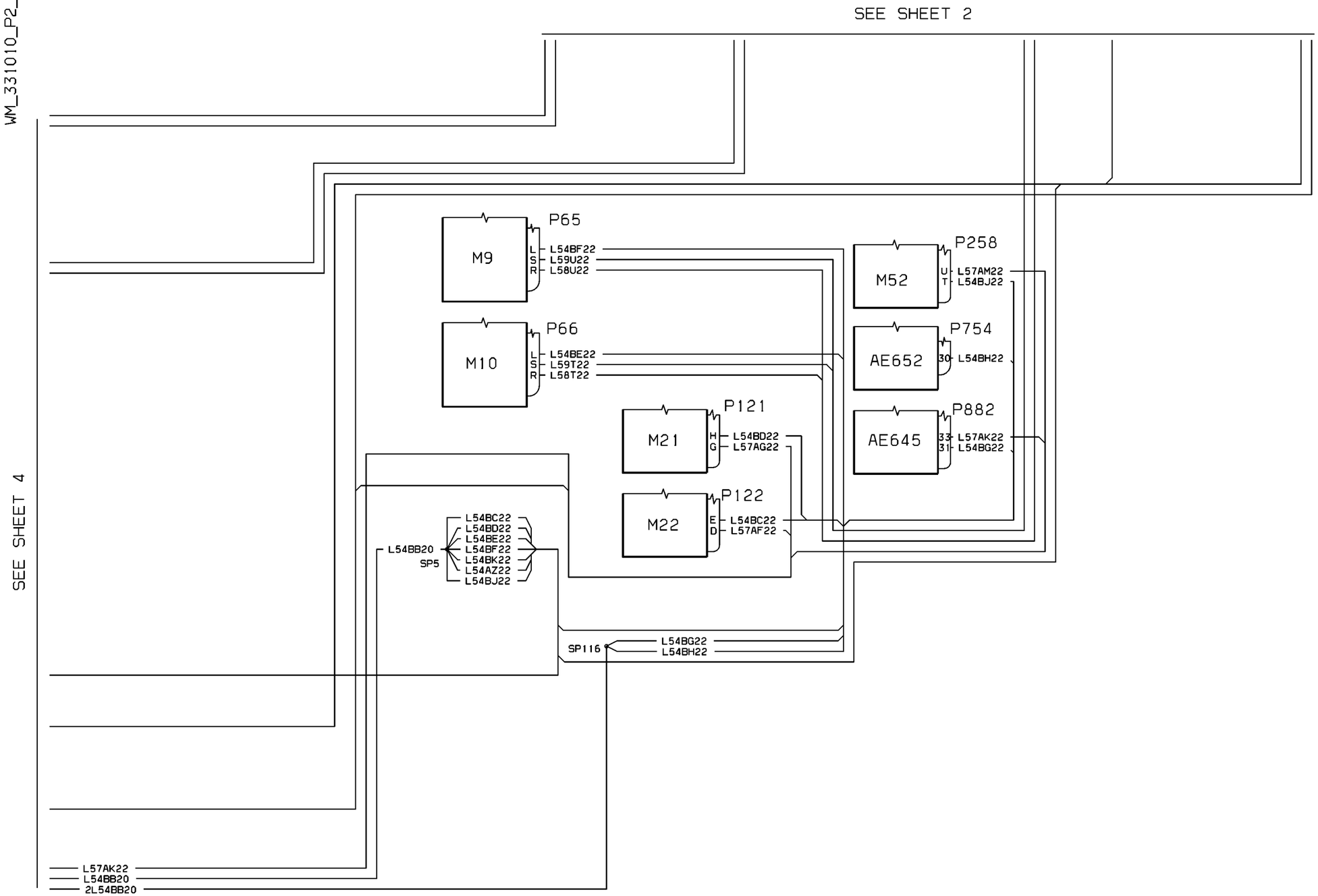

80-008505_G/F5

WM_311010_P3_S1

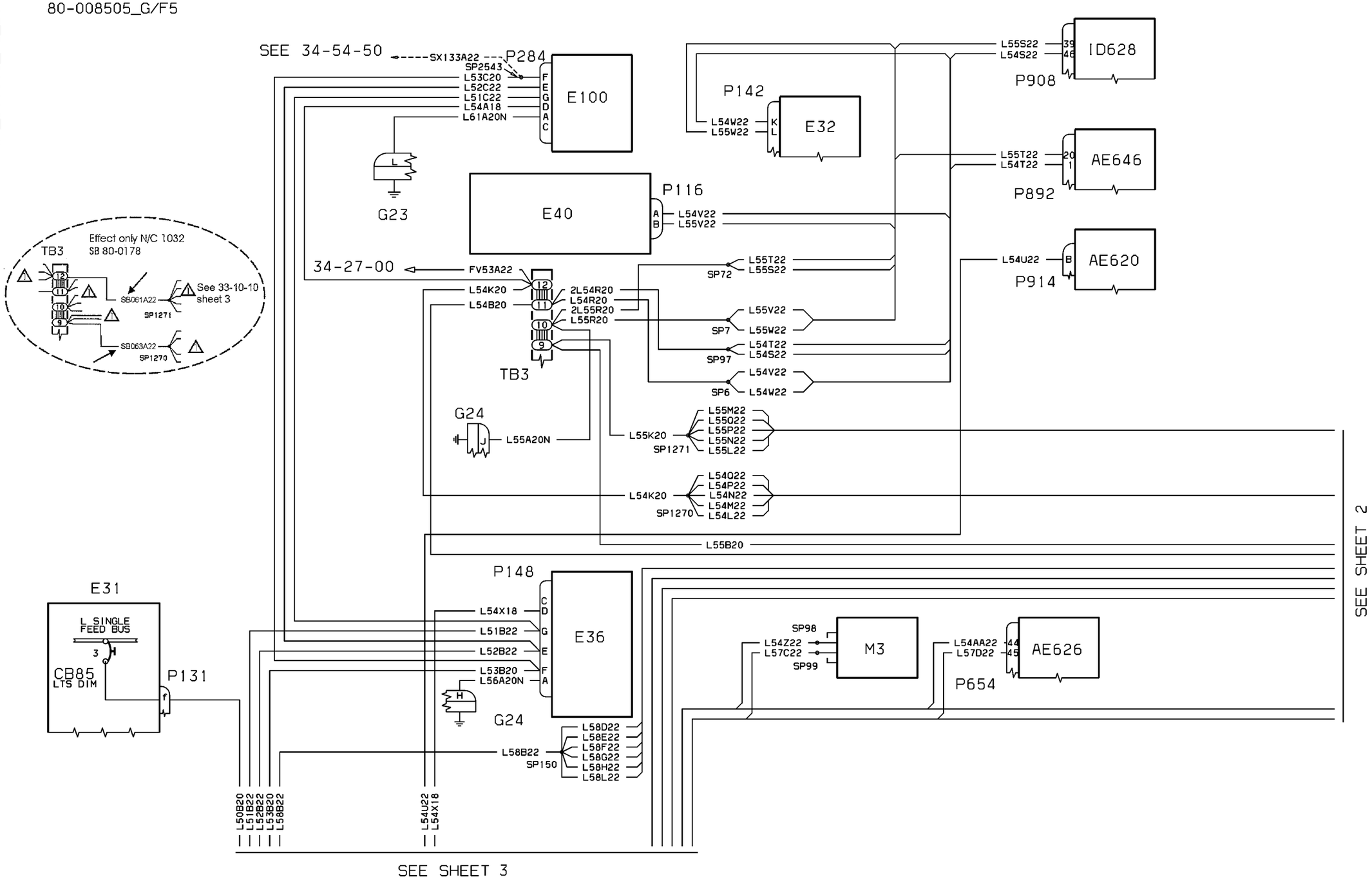


| EFFECTIVITY: 1023-1104 | FLIGHT COMPARTMENT Instrument Panel Lights 28Volt |
|---|---|

**33-10-10**

WM_311010_P3_S4

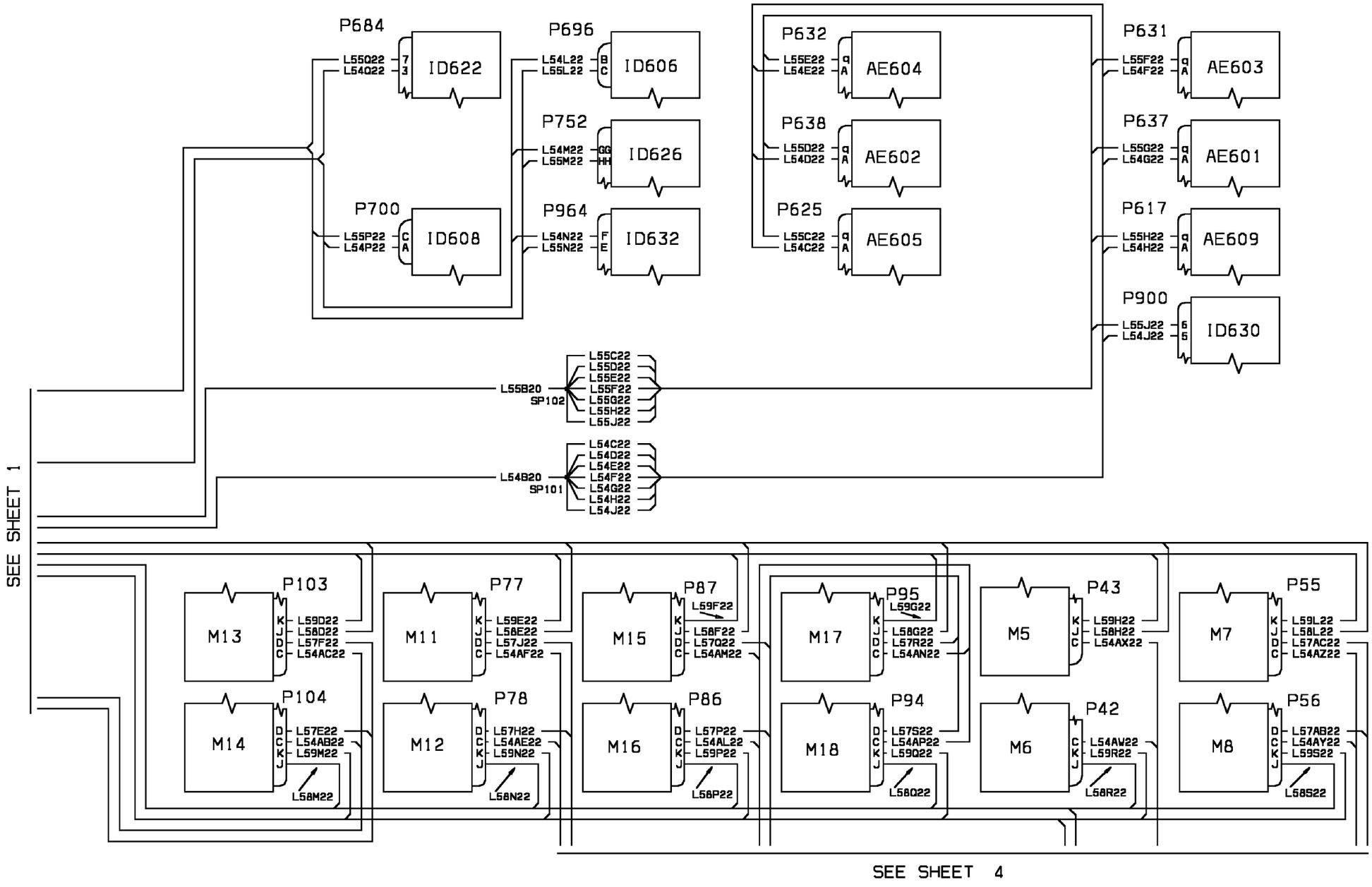

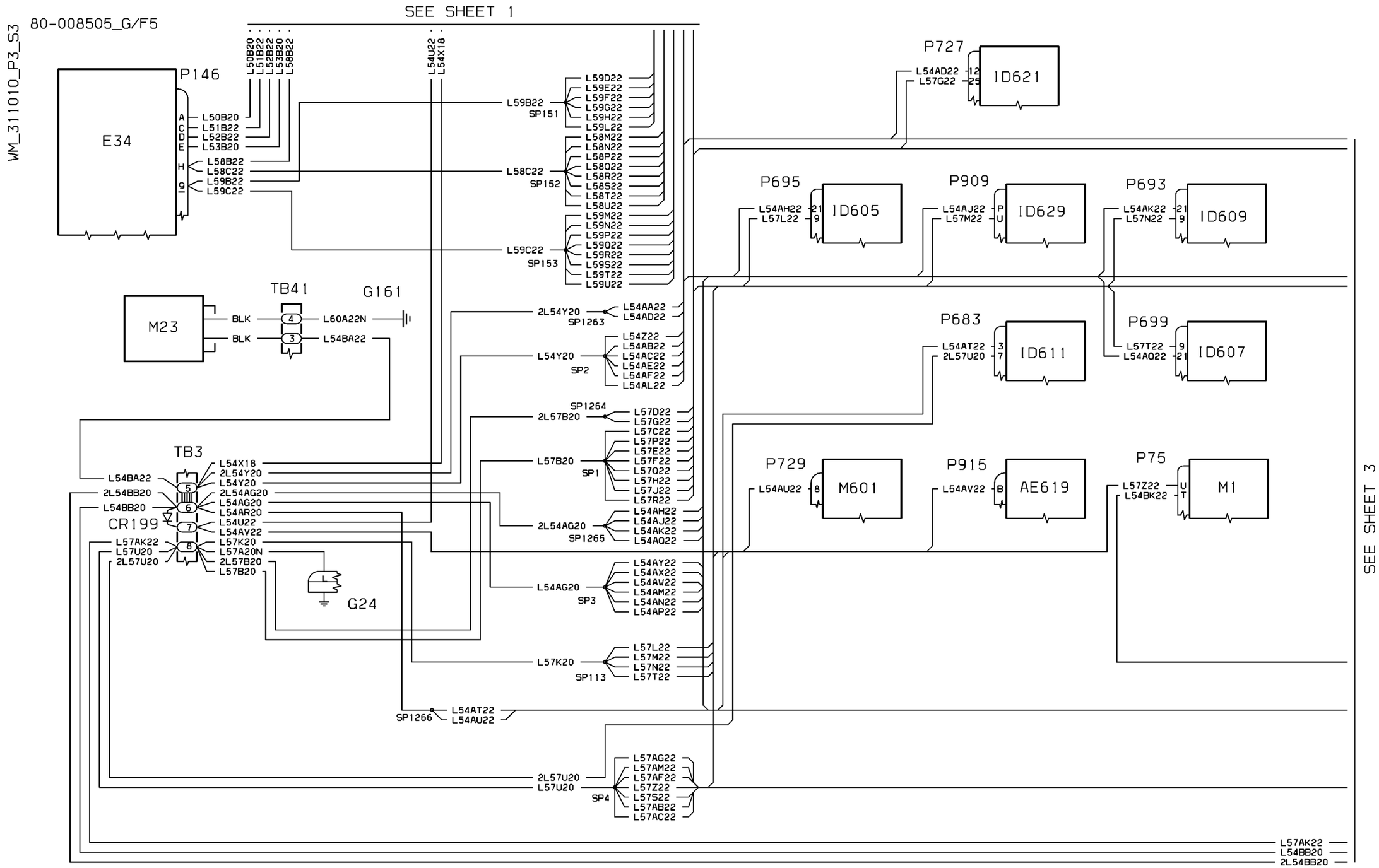
80-008505_G/F5
WM_311010_P3_S3
SEE SHEET 1
SEE SHEET 3
P146
E34
A L50B20
C L51B22
D L52B22
E L53B20
H L58B22
Q L58C22
L59B22
L59C22
L50B20
L51B22
L52B22
L53B20
L58B22
L54U22
L54X18
L59B22
SP151
L59D22
L59E22
L59F22
L59G22
L59H22
L59L22
L58C22
SP152
L58M22
L58N22
L58P22
L58Q22
L58R22
L58S22
L58T22
L58U22
L59C22
SP153
L59M22
L59N22
L59P22
L59Q22
L59R22
L59S22
L59T22
L59U22
TB41
G161
M23
BLK
BLK
4
3
L60A22N
L54BA22
2L54Y20
SP1263
L54AA22
L54AD22
L54Y20
SP2
L54Z22
L54AB22
L54AC22
L54AE22
L54AF22
L54AL22
SP1264
2L57B20
L57D22
L57G22
L57C22
L57P22
L57E22
L57F22
L57Q22
L57H22
L57J22
L57R22
L57B20
SP1
TB3
CR199
5
6
7
8
L54X18
2L54Y20
L54Y20
2L54AG20
L54AG20
L54AR20
L54U22
L54AV22
L57K20
L57A20N
2L57B20
L57B20
L54BA22
2L54BB20
L54BB20
L57AK22
L57U20
2L57U20
G24
2L54AG20
SP1265
L54AH22
L54AJ22
L54AK22
L54AQ22
L54AG20
SP3
L54AY22
L54AX22
L54AW22
L54AM22
L54AN22
L54AP22
L57K20
SP113
L57L22
L57M22
L57N22
L57T22
SP1266
L54AT22
L54AU22
2L57U20
L57U20
SP4
L57AG22
L57AM22
L57AF22
L57Z22
L57S22
L57AB22
L57AC22
P727
L54AD22
L57G22
12
25
ID621
P695
L54AH22
L57L22
21
9
ID605
P909
L54AJ22
L57M22
P
U
ID629
P693
L54AK22
L57N22
21
9
ID609
P683
L54AT22
2L57U20
3
7
ID611
P699
L57T22
L54AQ22
9
21
ID607
P729
L54AU22
8
M601
P915
L54AV22
B
AE619
P75
L57Z22
L54BK22
U
T
M1
L57AK22
L54BB20
2L54BB20

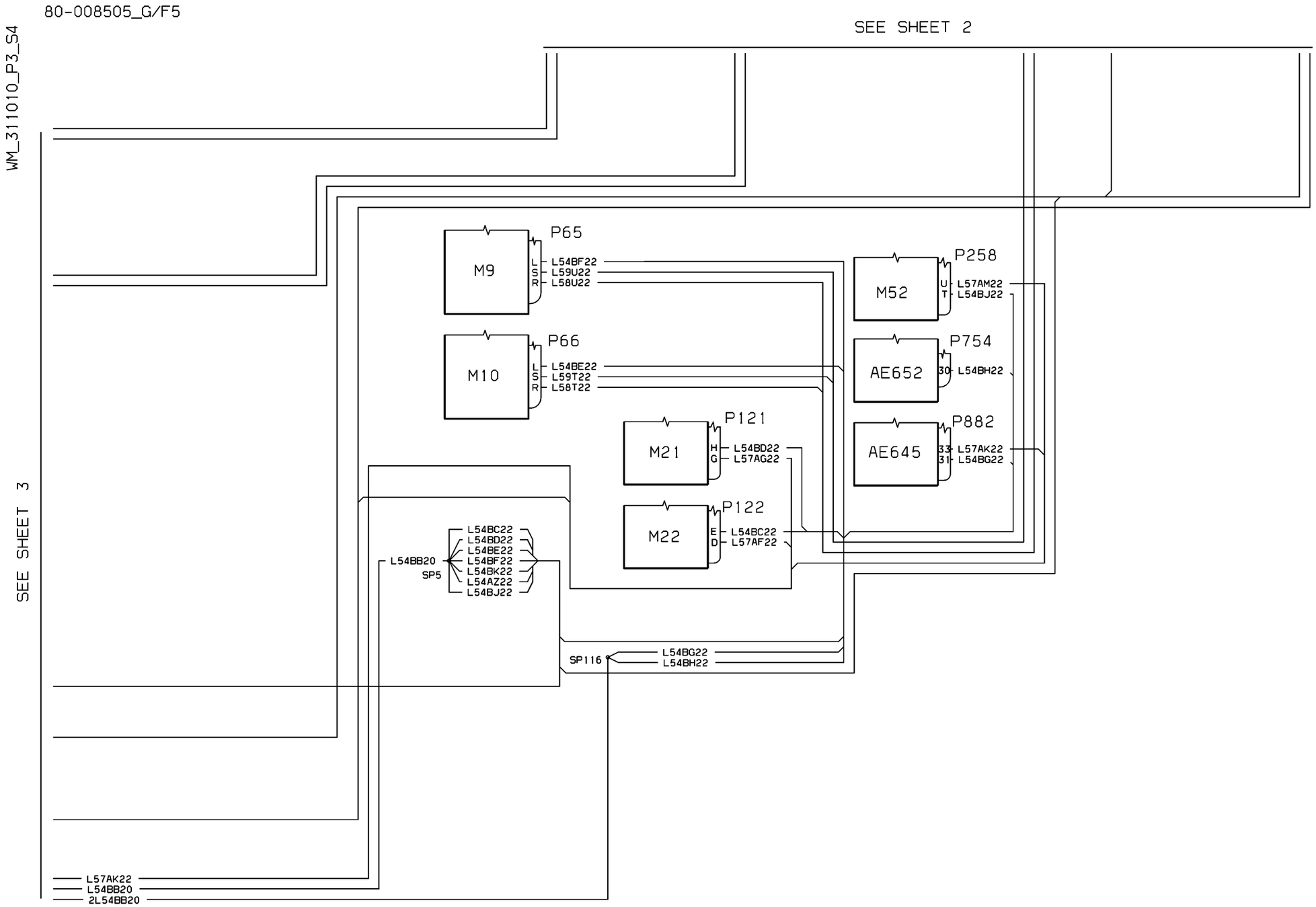
80-008505_G/F5
WM_311010_P3_S4
SEE SHEET 2
SEE SHEET 3
P65
M9
L54BF22
L59U22
L58U22
P66
M10
L54BE22
L59T22
L58T22
P121
M21
L54BD22
L57AG22
P122
M22
L54BC22
L57AF22
L54BB20
SP5
L54BC22
L54BD22
L54BE22
L54BF22
L54BK22
L54AZ22
L54BJ22
SP116
L54BG22
L54BH22
P258
M52
L57AM22
L54BJ22
P754
AE652
L54BH22
P882
AE645
L57AK22
L54BG22
L57AK22
L54BB20
2L54BB20

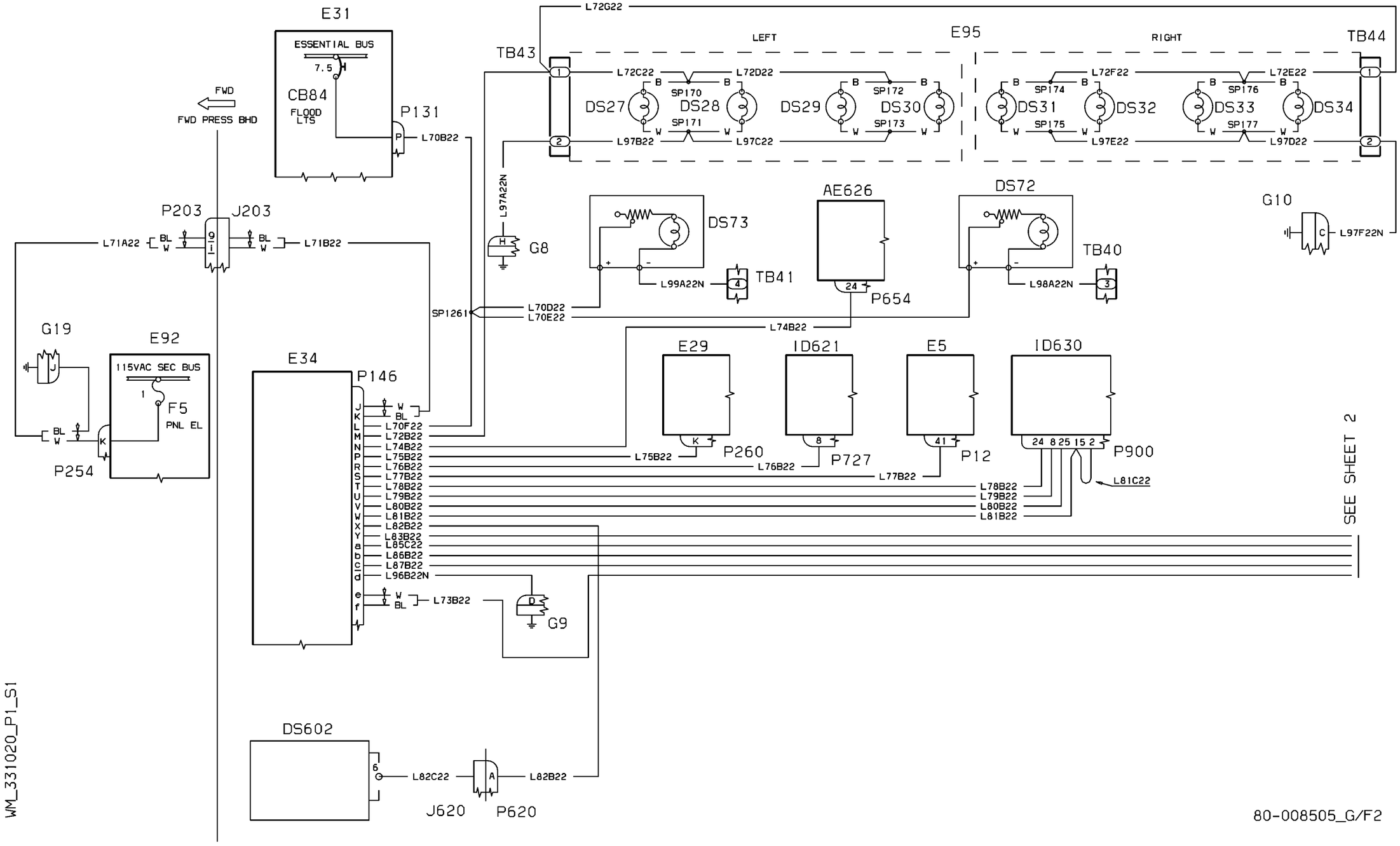


| EFFECTIVITY: 1004-1009 | FLIGHT COMPARTMENT<br>Instrument Panel Lights 115Volt |
|---|---|

**33-10-20**

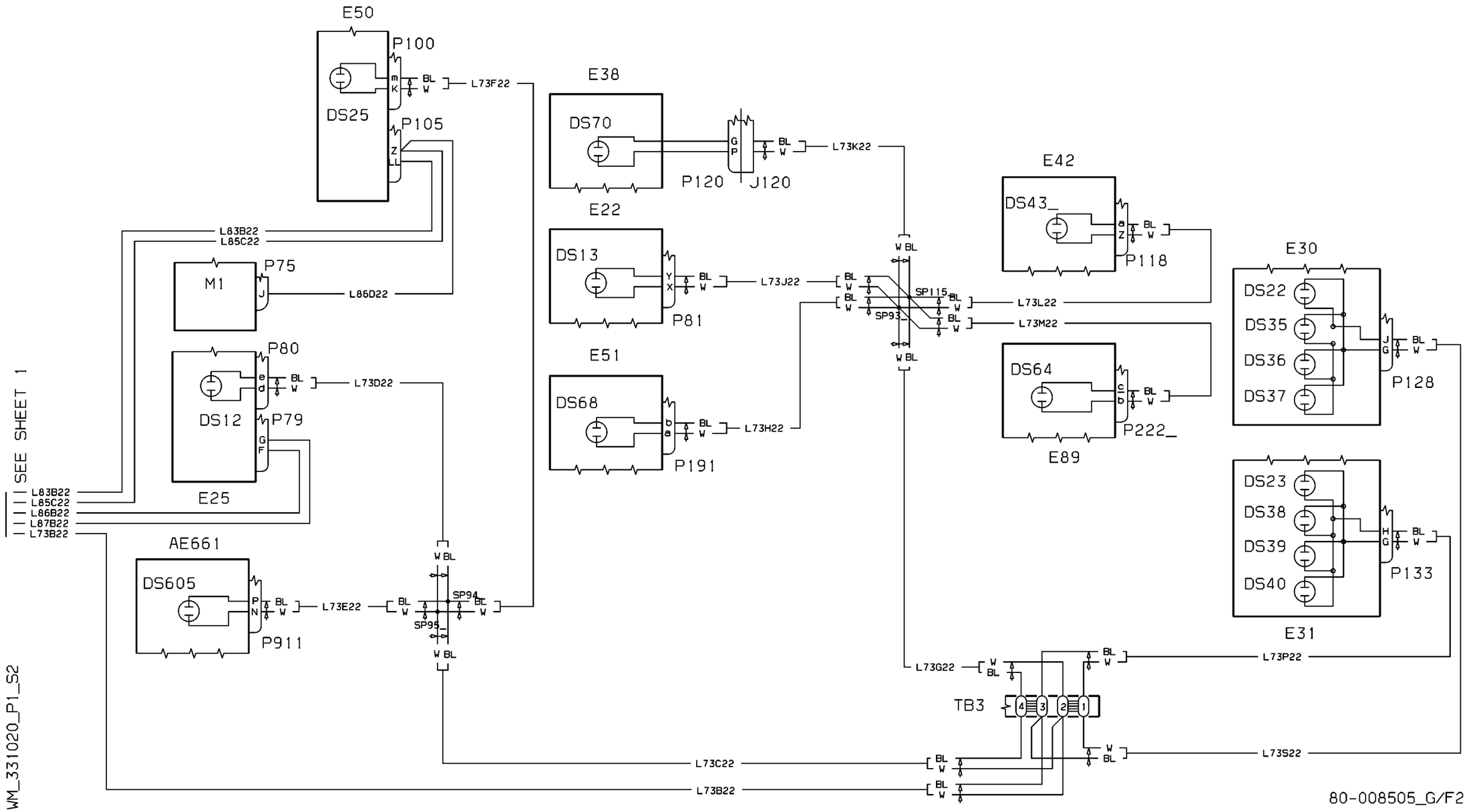


| EFFECTIVITY: | FLIGHT COMPARTMENT |
|---|---|
| 1004-1009 | Instrument Panel Lights 115Volt |

**33-10-20**

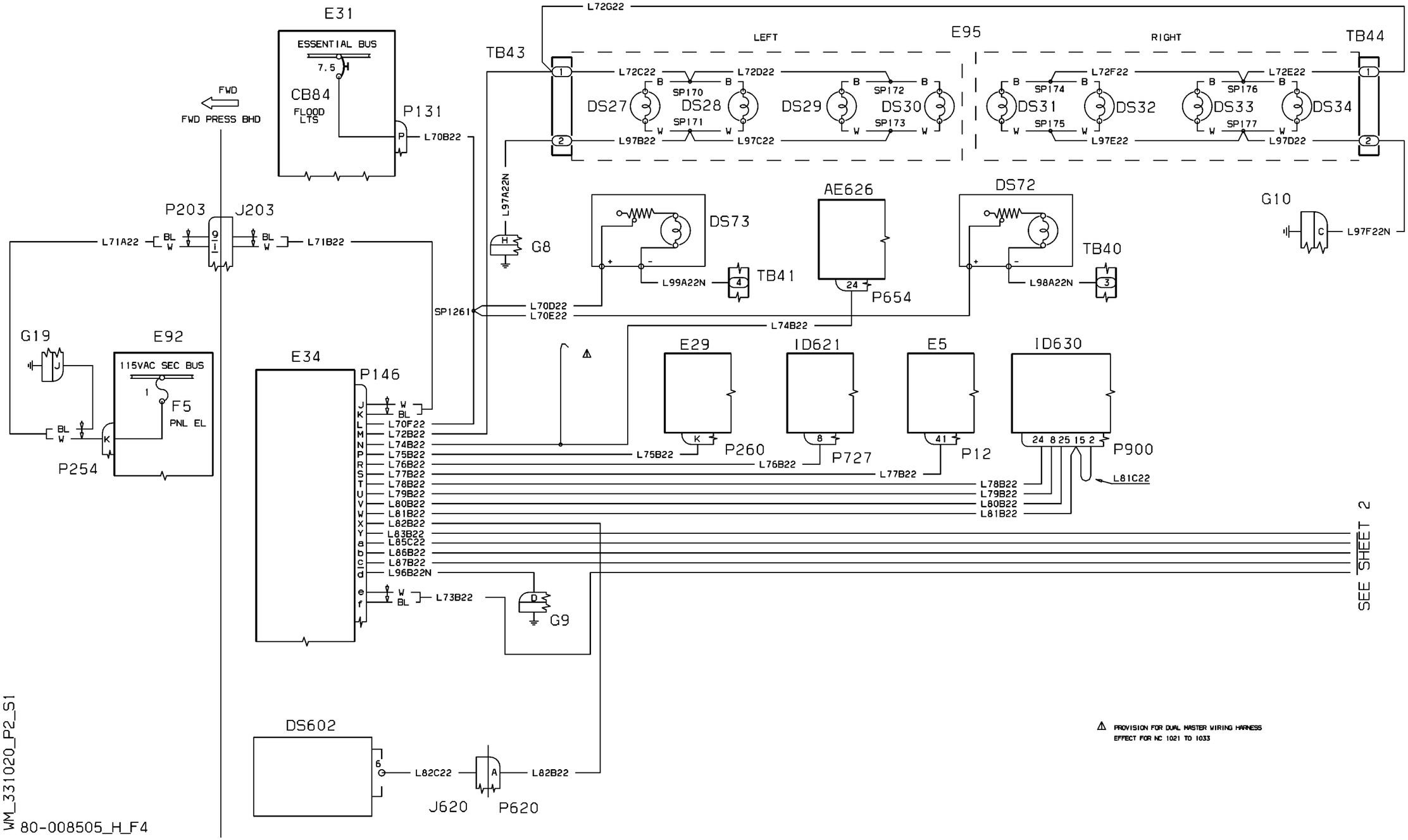


| EFFECTIVITY: | FLIGHT COMPARTMENT |
|---|---|
| 1010-1033 | Instrument Panel Lights 115Volt |

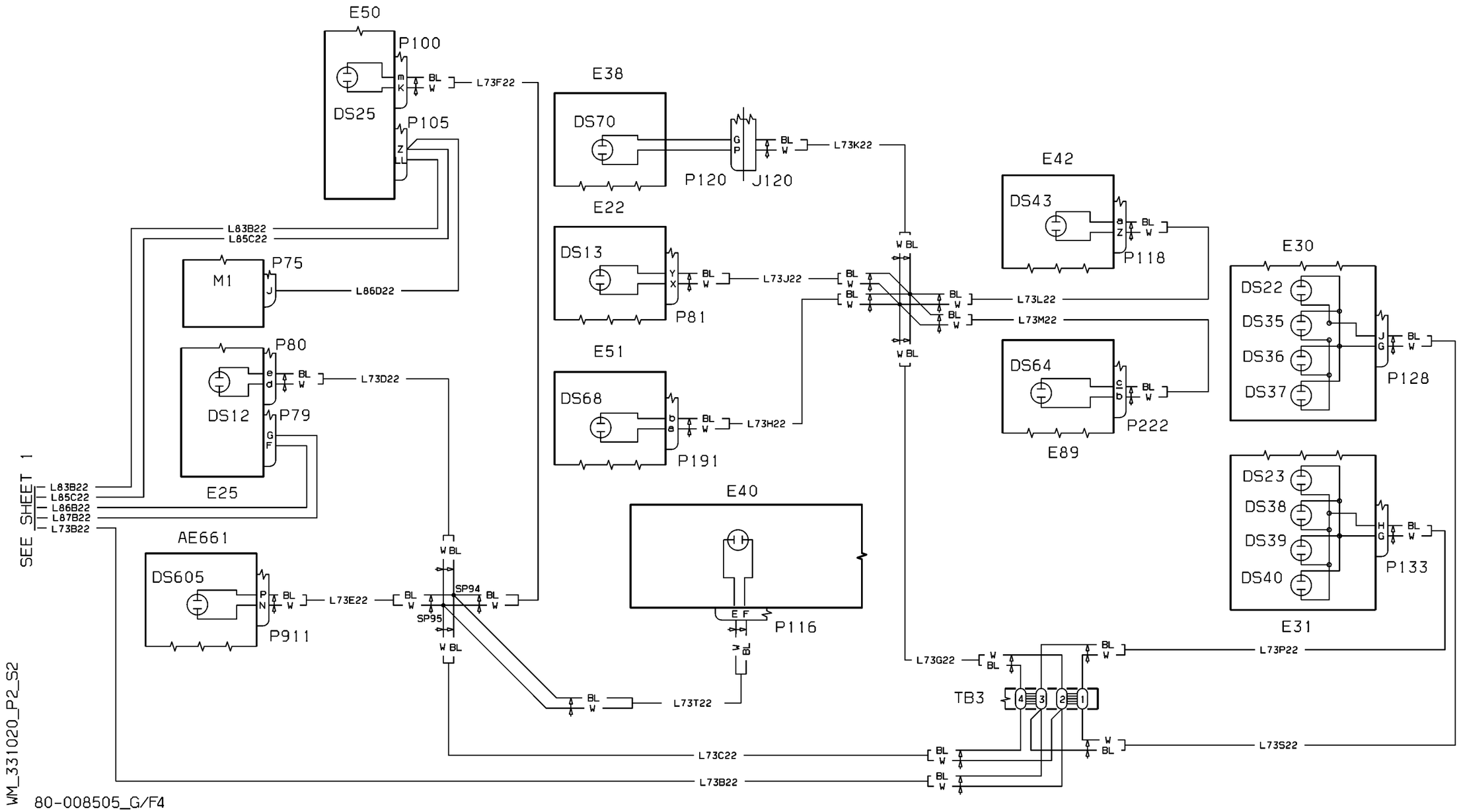
E50
P100
DS25
P105
L73F22
E38
DS70
P120
J120
L73K22
E42
DS43
P118
E22
DS13
P81
L73J22
L73L22
L73M22
E30
DS22
DS35
DS36
DS37
P128
E51
DS68
P191
L73H22
DS64
P222
E89
L83B22
L85C22
M1
P75
L86D22
P80
DS12
P79
L73D22
E25
SEE SHEET 1
L83B22
L85C22
L86B22
L87B22
L73B22
AE661
DS605
P911
L73E22
SP94
SP95
E40
P116
L73T22
DS23
DS38
DS39
DS40
P133
E31
L73G22
TB3
L73P22
L73S22
L73C22
L73B22
WM_331020_P2_S2
80-008505_G/F4

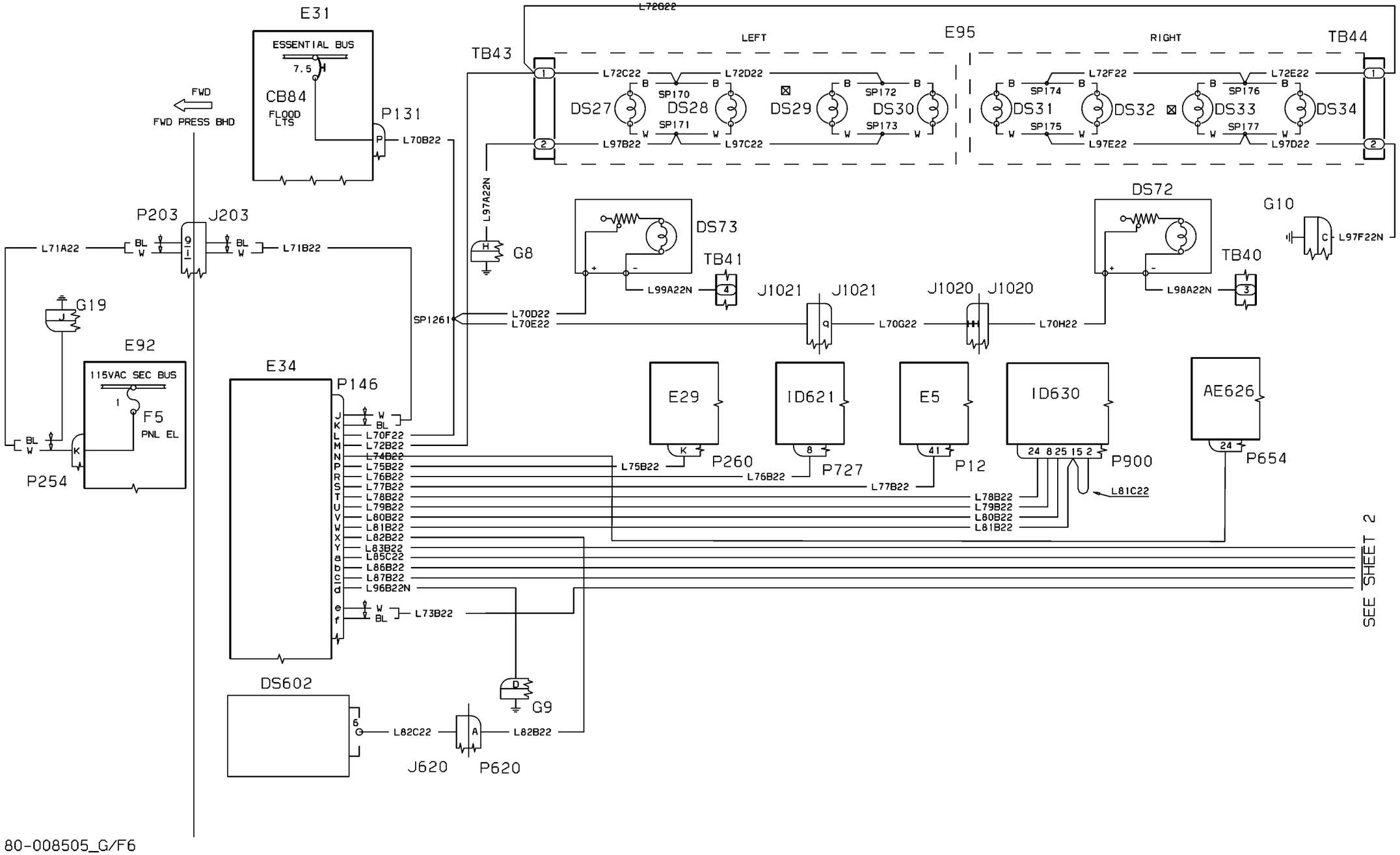
E31
ESSENTIAL BUS
7.5
CB84
FLOOD LTS
P131
FWD
FWD PRESS BHD
L70B22
TB43
L72G22
LEFT
E95
RIGHT
TB44
L72C22
L72D22
L72F22
L72E22
SP170
SP172
SP174
SP176
DS27
DS28
DS29
DS30
DS31
DS32
DS33
DS34
SP171
SP173
SP175
SP177
L97B22
L97C22
L97E22
L97D22
P203
J203
L71A22
L71B22
L97A22N
G8
DS73
TB41
DS72
TB40
G10
L97F22N
L99A22N
L98A22N
G19
E92
115VAC SEC BUS
F5
PNL EL
P254
SP1261
L70D22
L70E22
J1021
J1020
L70G22
L70H22
E34
P146
E29
ID621
E5
ID630
AE626
P260
P727
P12
P900
P654
L75B22
L76B22
L77B22
L78B22
L79B22
L80B22
L81B22
L81C22
L70F22
L72B22
L74B22
L73B22
DS602
G9
L82C22
L82B22
J620
P620
SEE SHEET 2
WM_331020_P3_S1
80-008505_G/F6

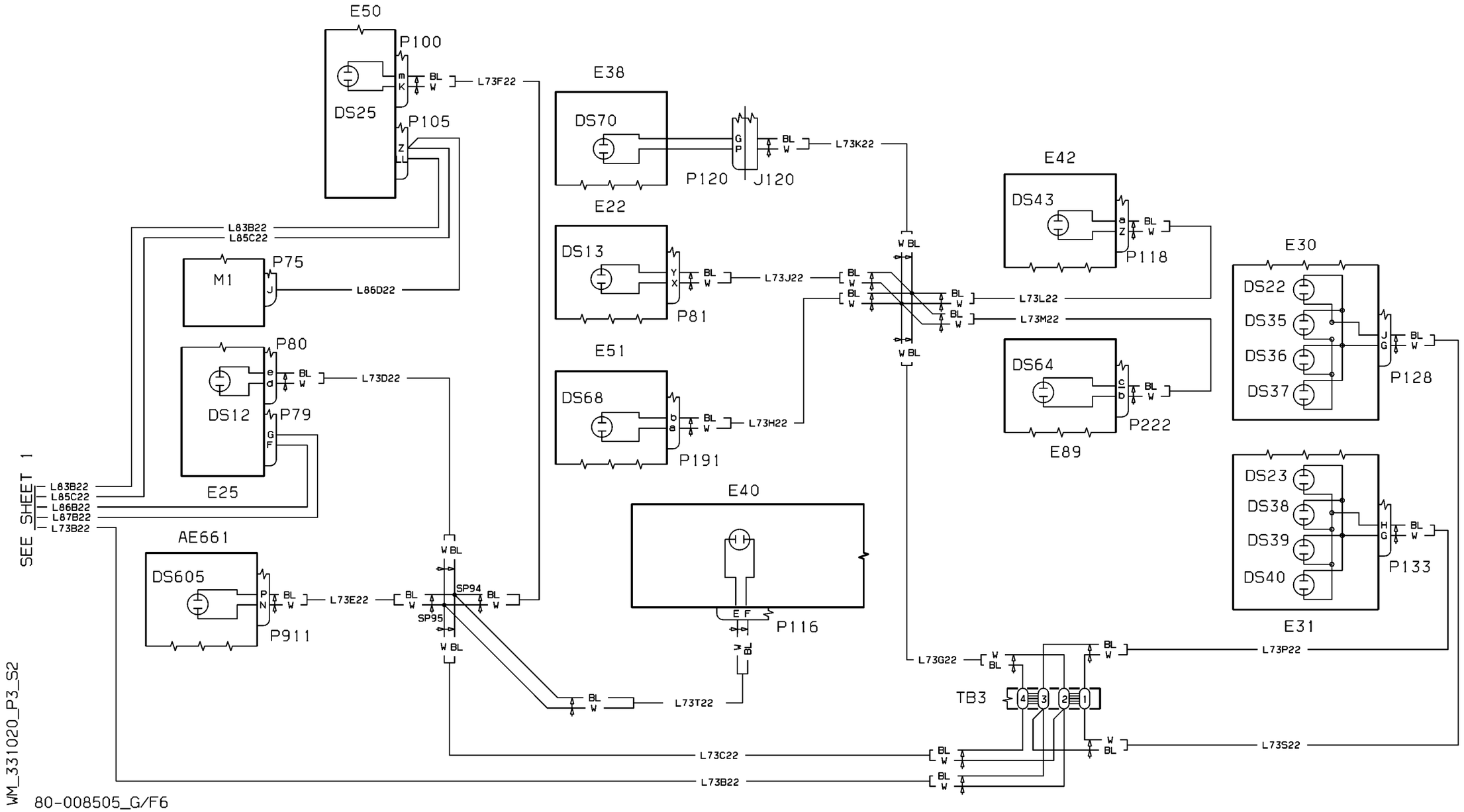


| EFFECTIVITY: 1034-1104 | FLIGHT COMPARTMENT<br>Instrument Panel Lights 115Volt |
|---|---|

**33-10-20**

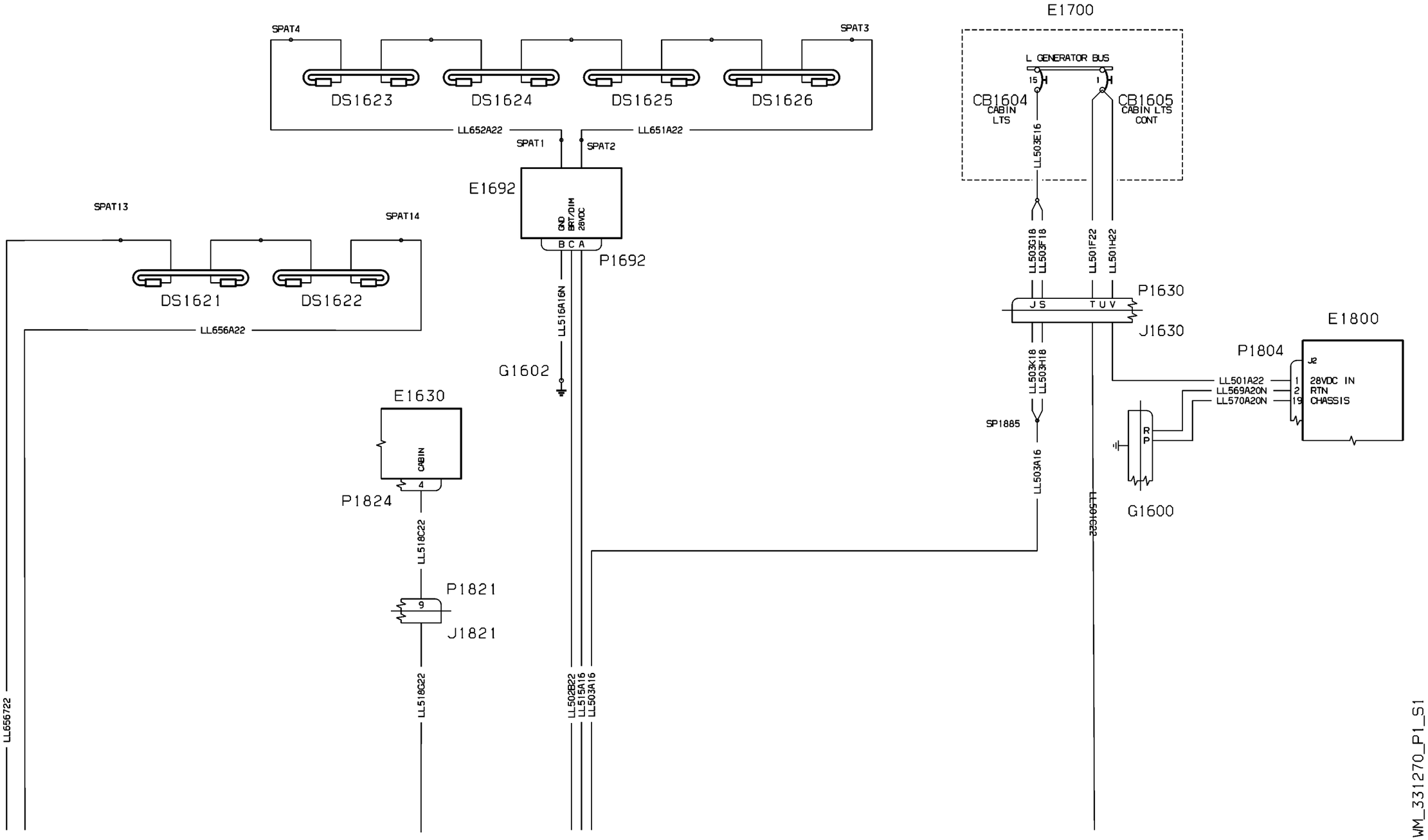


| EFFECTIVITY: | FLIGHT COMPARTMENT |
|---|---|
| 1032-1032 | Cabin Lights (Option 19) |

**33-12-00**

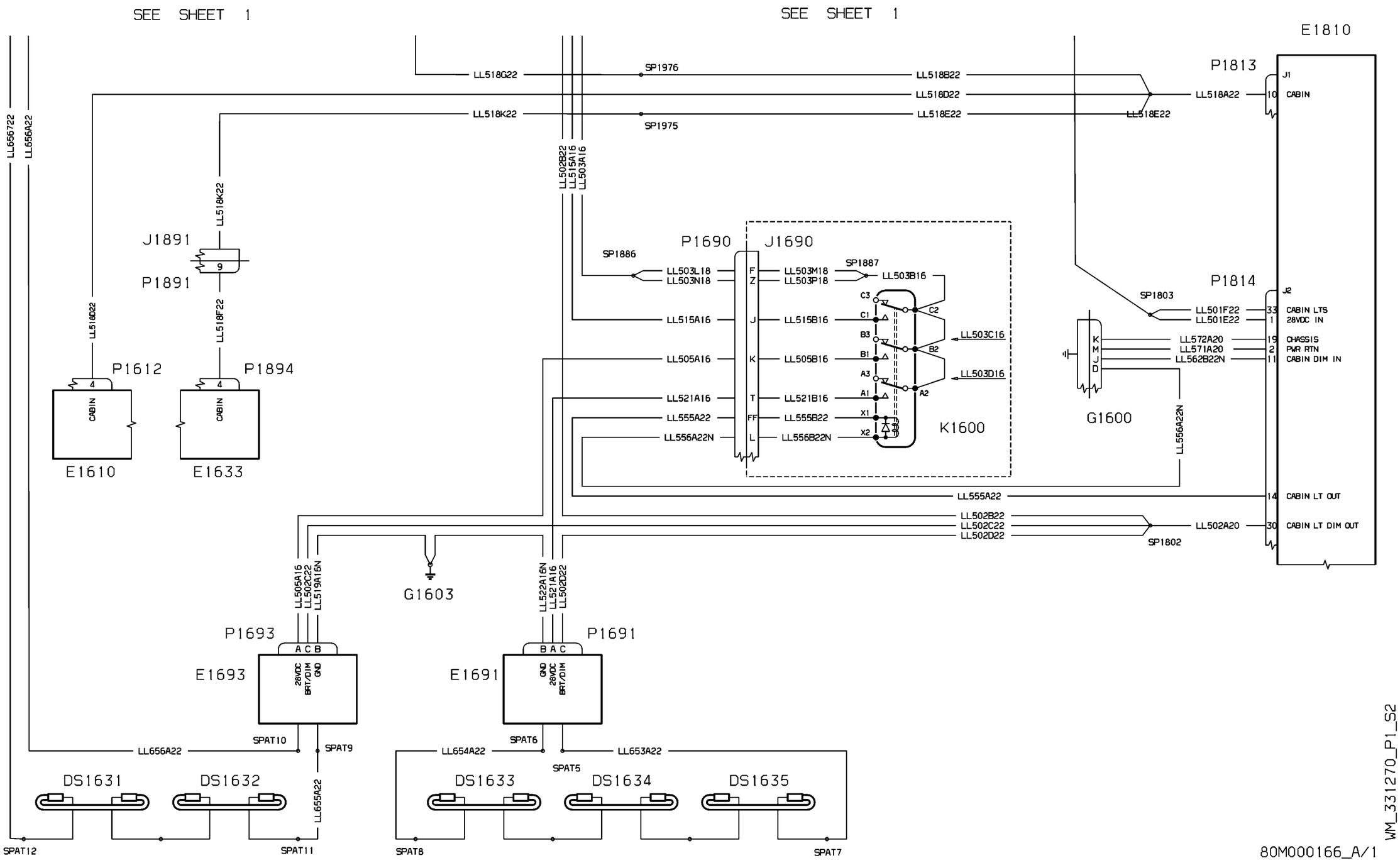


| EFFECTIVITY: | FLIGHT COMPARTMENT |
|---|---|
| 1032-1032 | Cabin Lights (Option 19) |

**33-12-00**

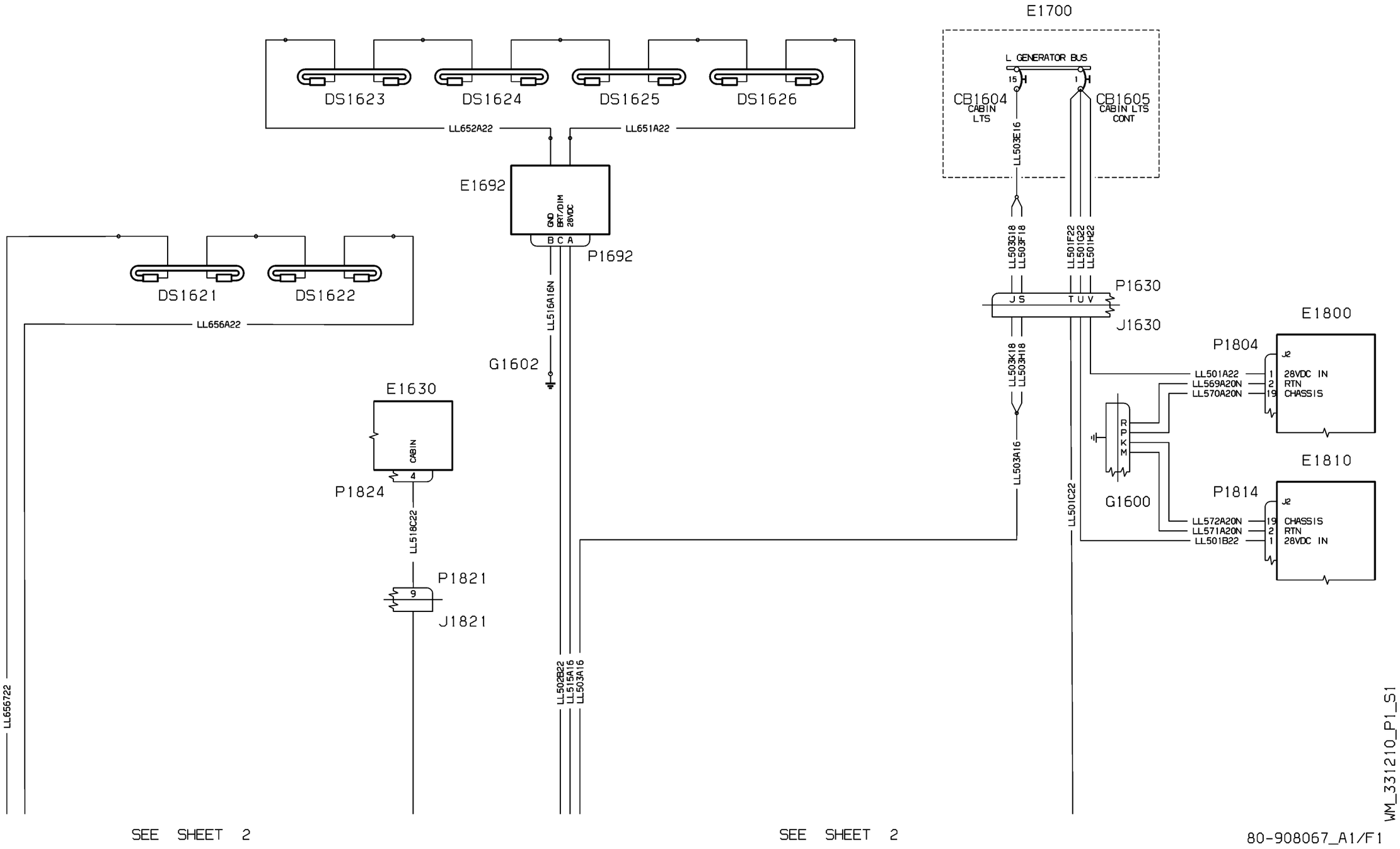


| EFFECTIVITY: | FLIGHT COMPARTMENT |
|---|---|
| 1034 | Cabin Lights (Opt.1) |

**33-12-10**

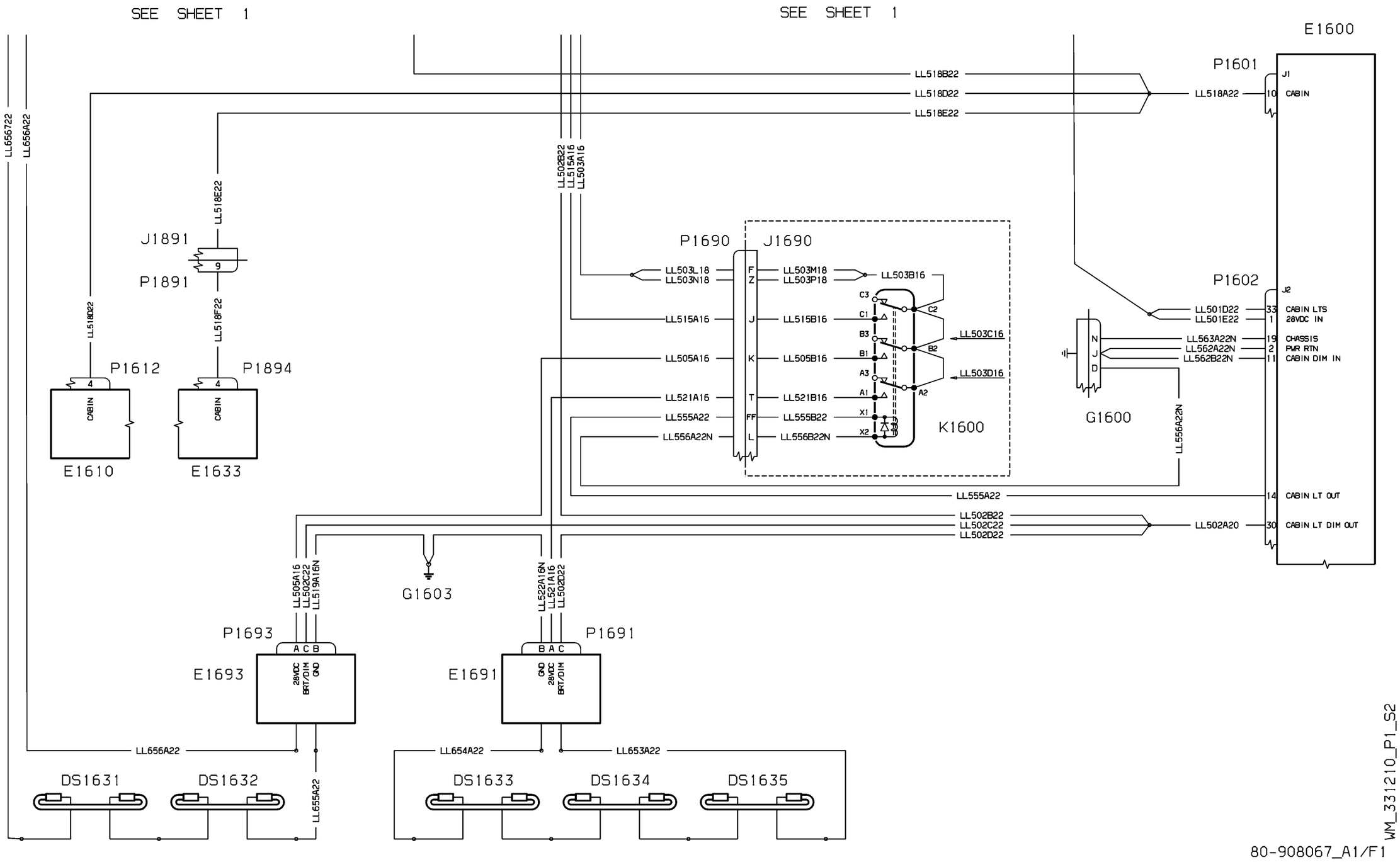


WM_331210_P1_S2

80-908067_A1/F1

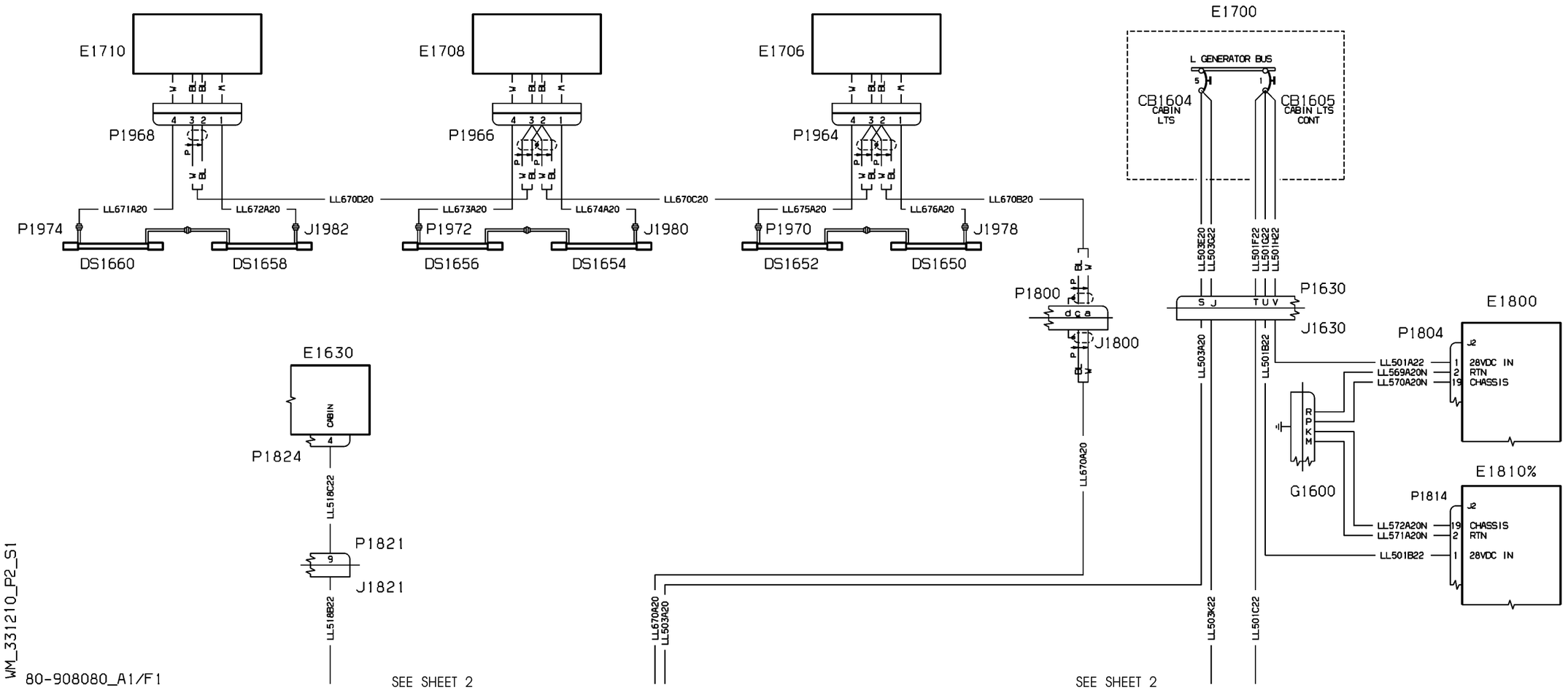


| EFFECTIVITY: | FLIGHT COMPARTMENT |
|---|---|
| 1035,1045 | Cabin Lights (Opt.2) |

**33-12-10**

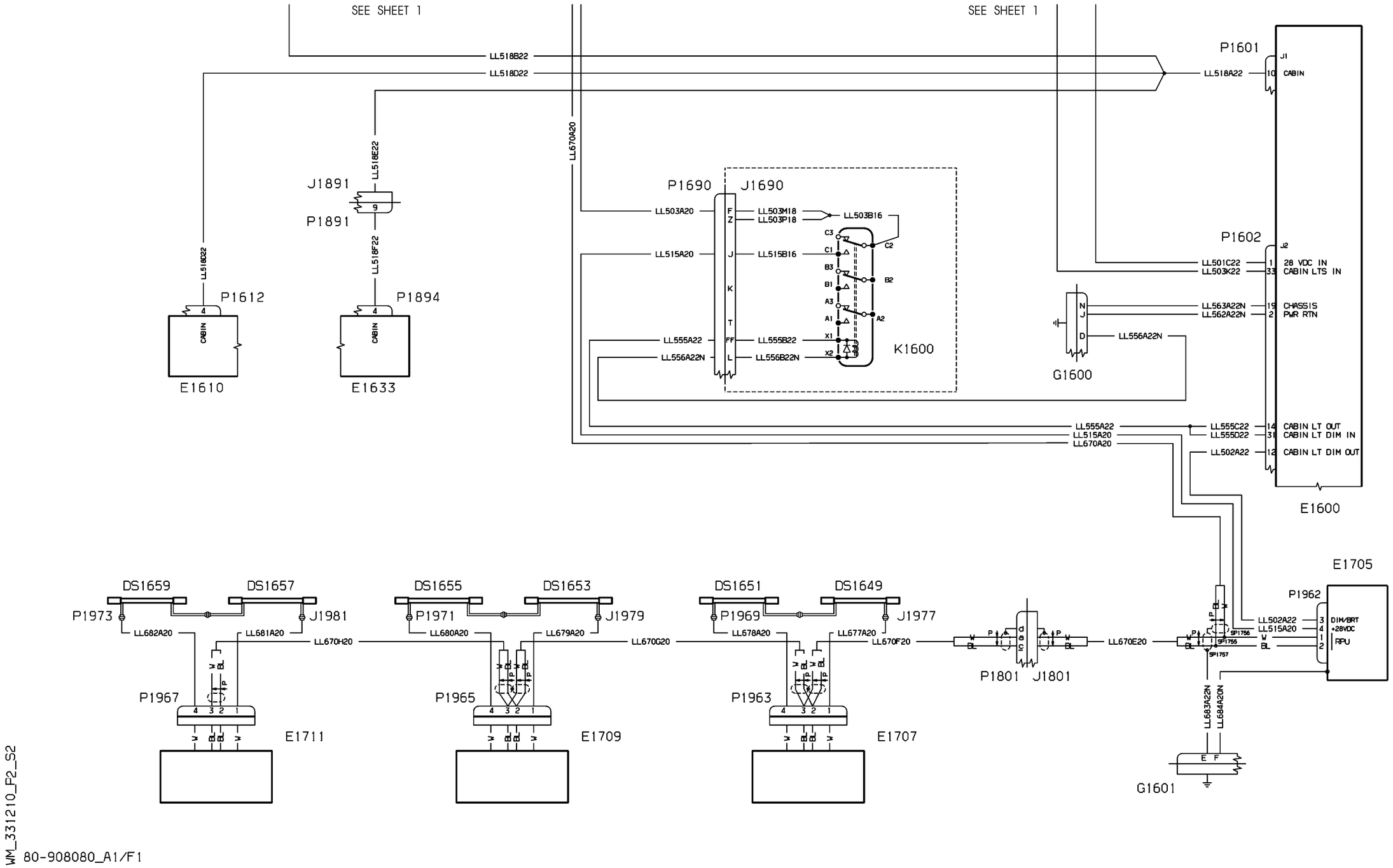


| EFFECTIVITY: | FLIGHT COMPARTMENT |
|---|---|
| 1035,1045 | Cabin Lights (Opt.2) |

**33-12-10**

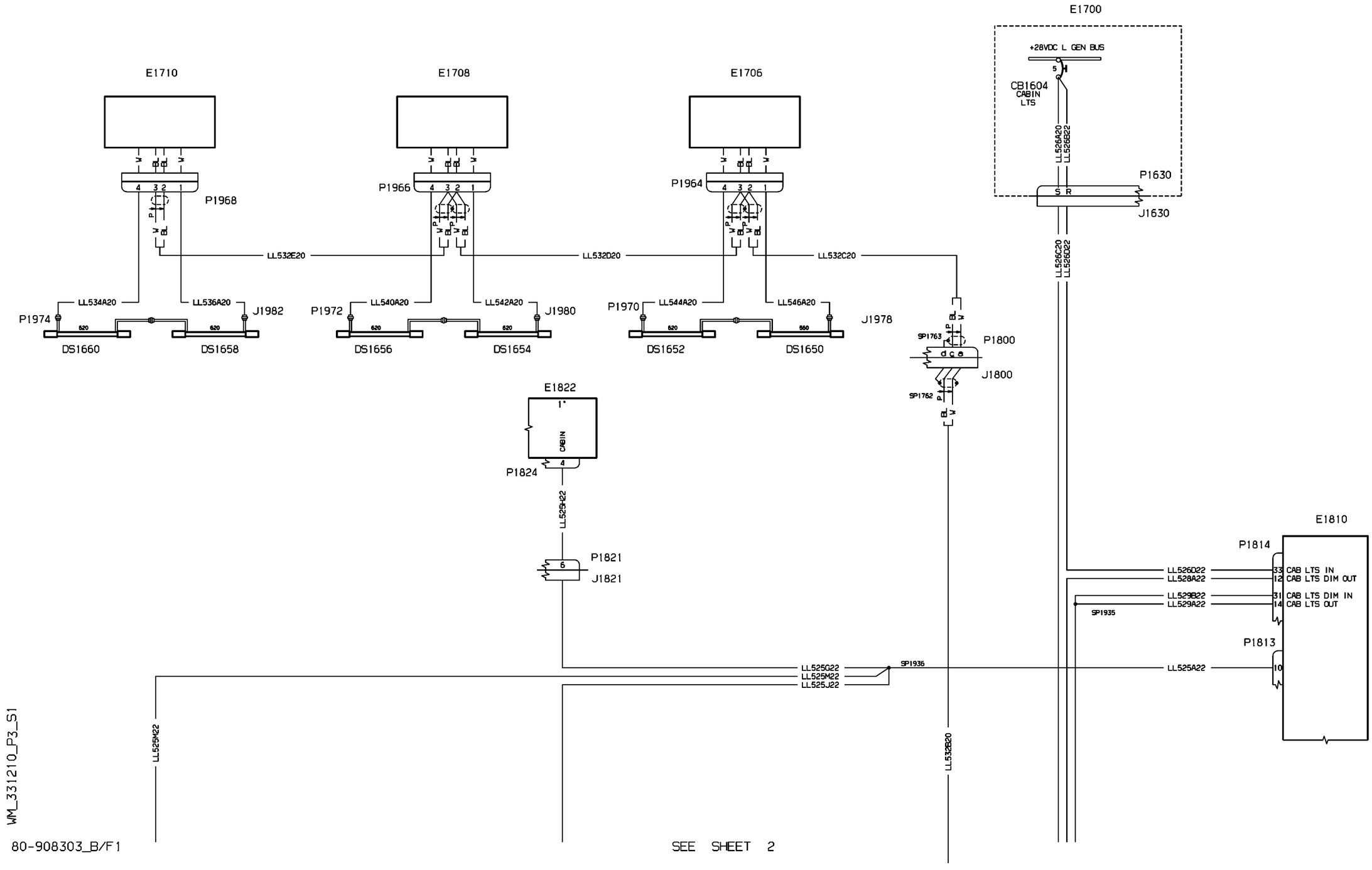


| EFFECTIVITY: | FLIGHT COMPARTMENT<br>Cabin Lights (Opt. 1 - 2 ) |
|---|---|

**33-12-10**

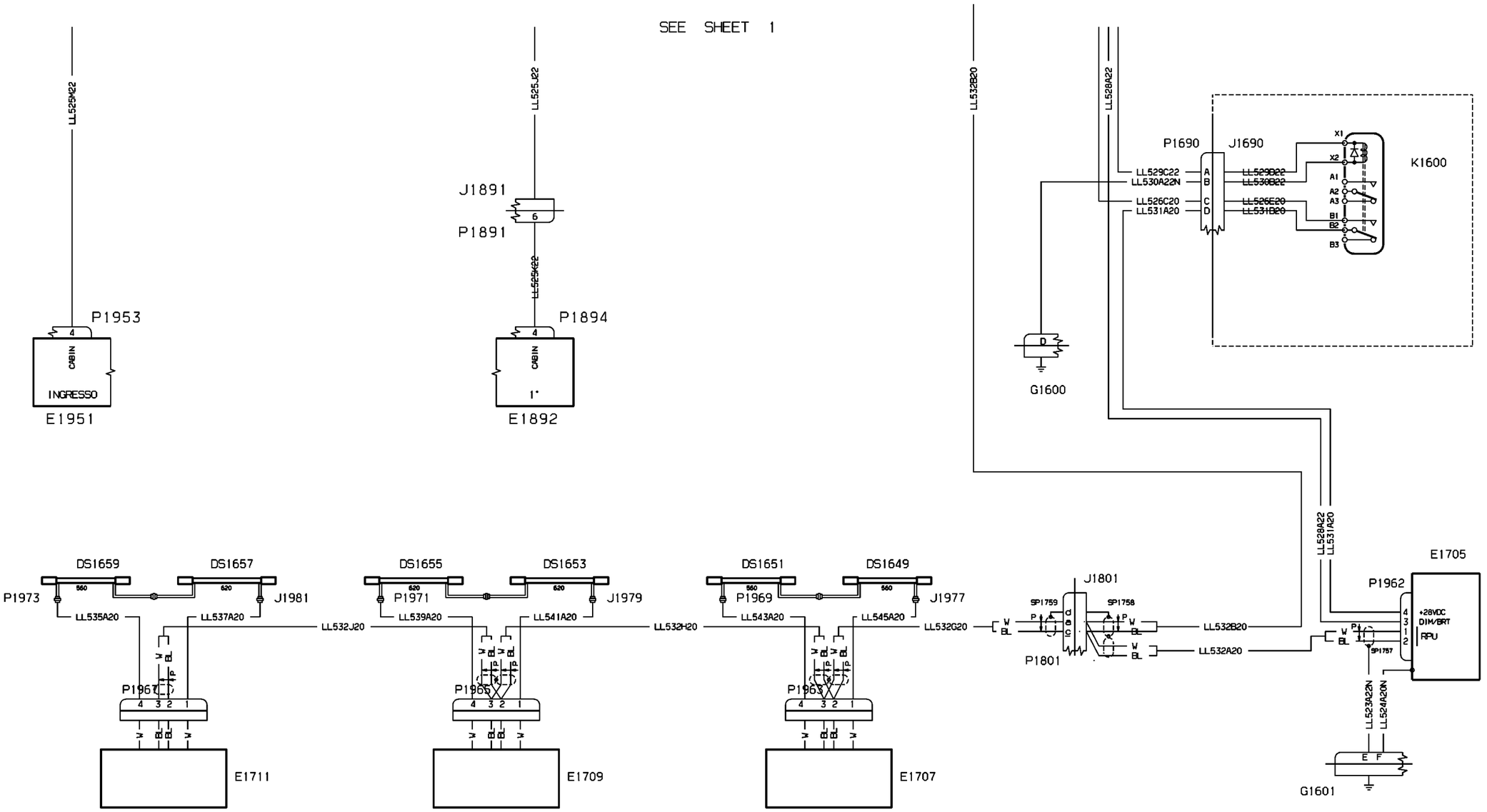


WM_331210_P3_S2

80-908303_B/F1

| EFFECTIVITY: | FLIGHT COMPARTMENT<br>Cabin Lights (Opt. 1 - 2 ) |
|---|---|

80-908035_A/F1

WM_331230_P1_S1

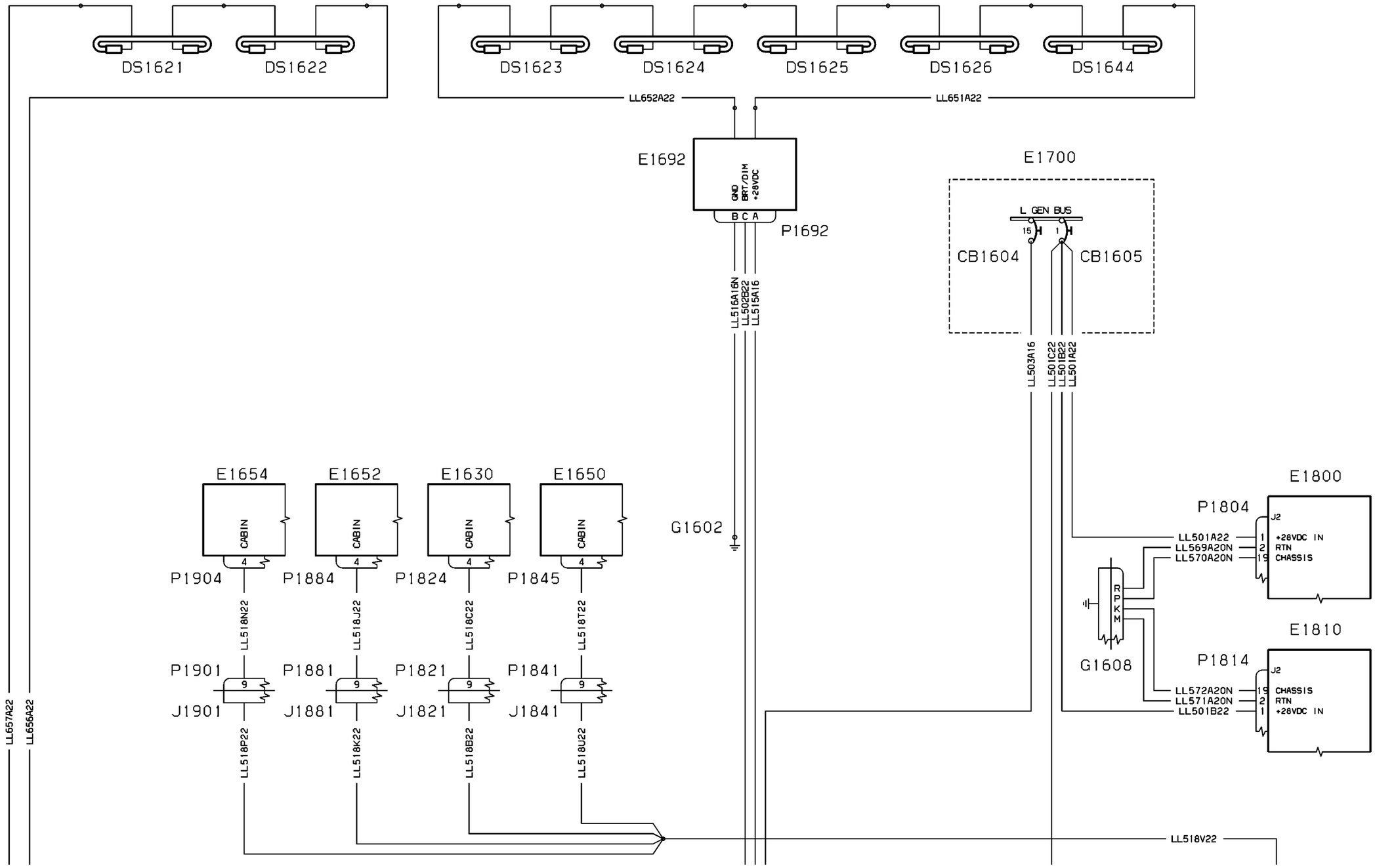


| EFFECTIVITY: | FLIGHT COMPARTMENT<br>Cabin Lights (Opt.8) |
|---|---|

**33-12-30**

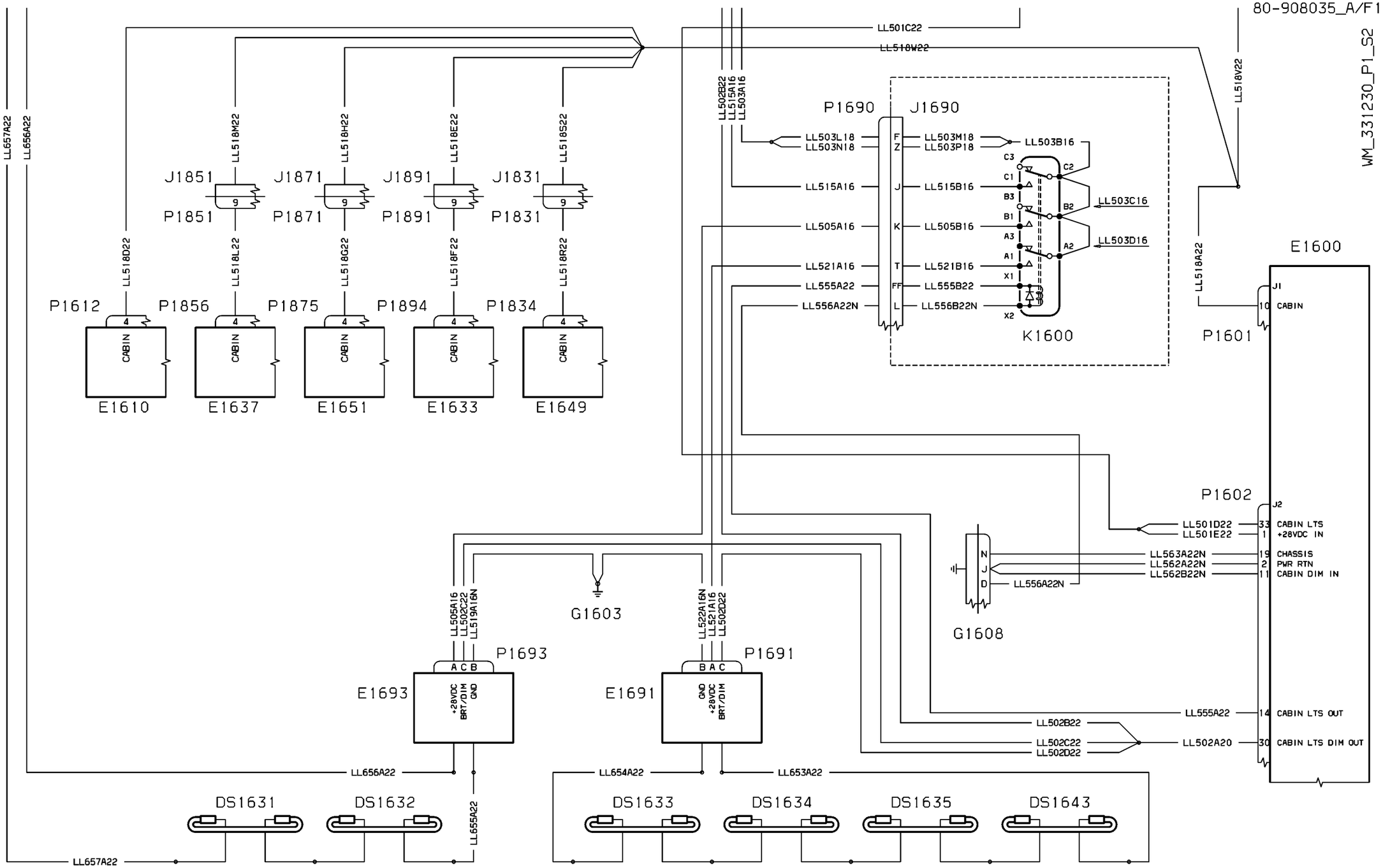


| EFFECTIVITY: | FLIGHT COMPARTMENT<br>Cabin Lights (Opt.8) |
|---|---|

**33-12-30**

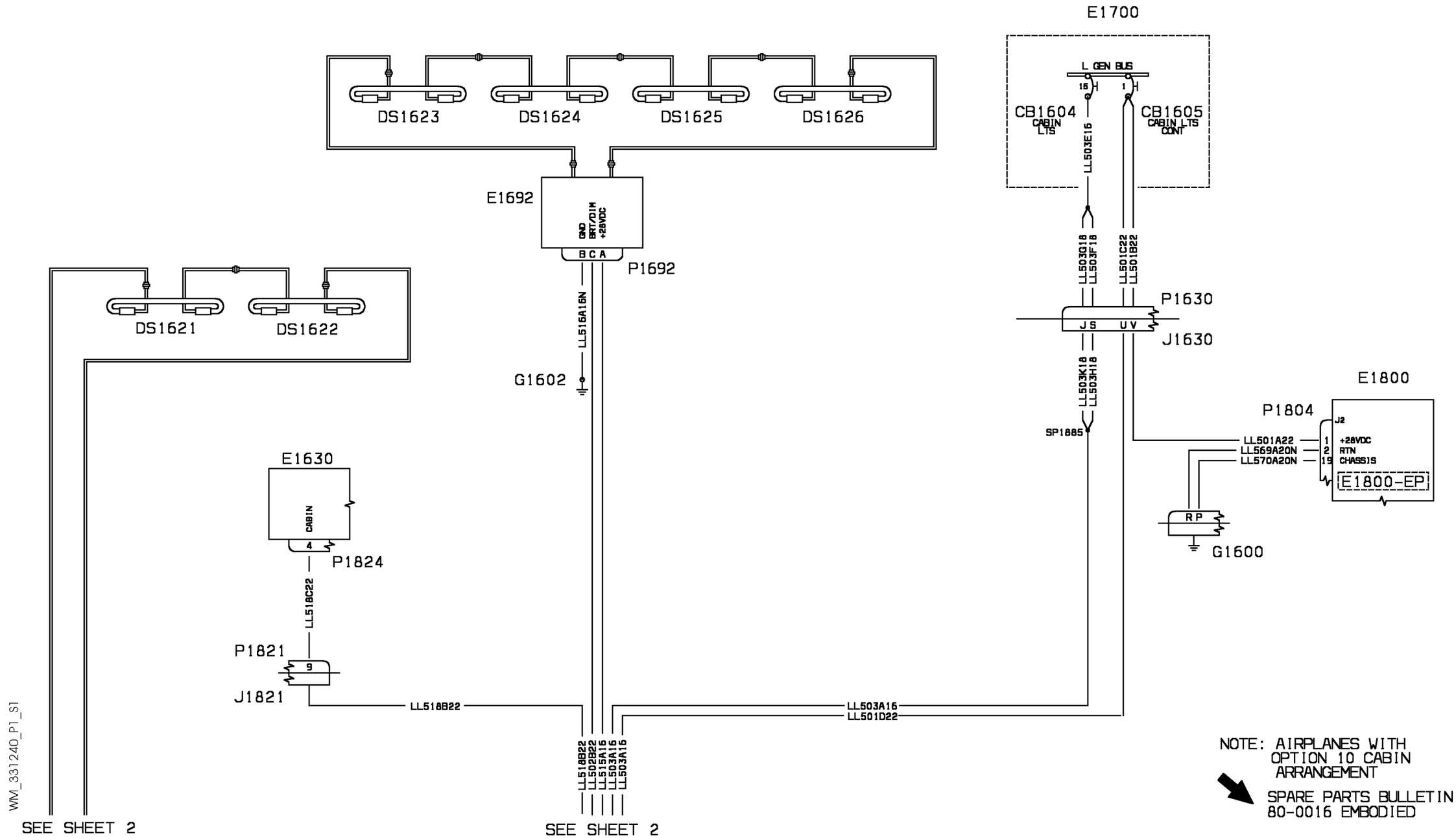


| EFFECTIVITY: | FLIGHT COMPARTMENT<br>Cabin Lights (OPT.10 AMI) |
|---|---|

**33-12-40**

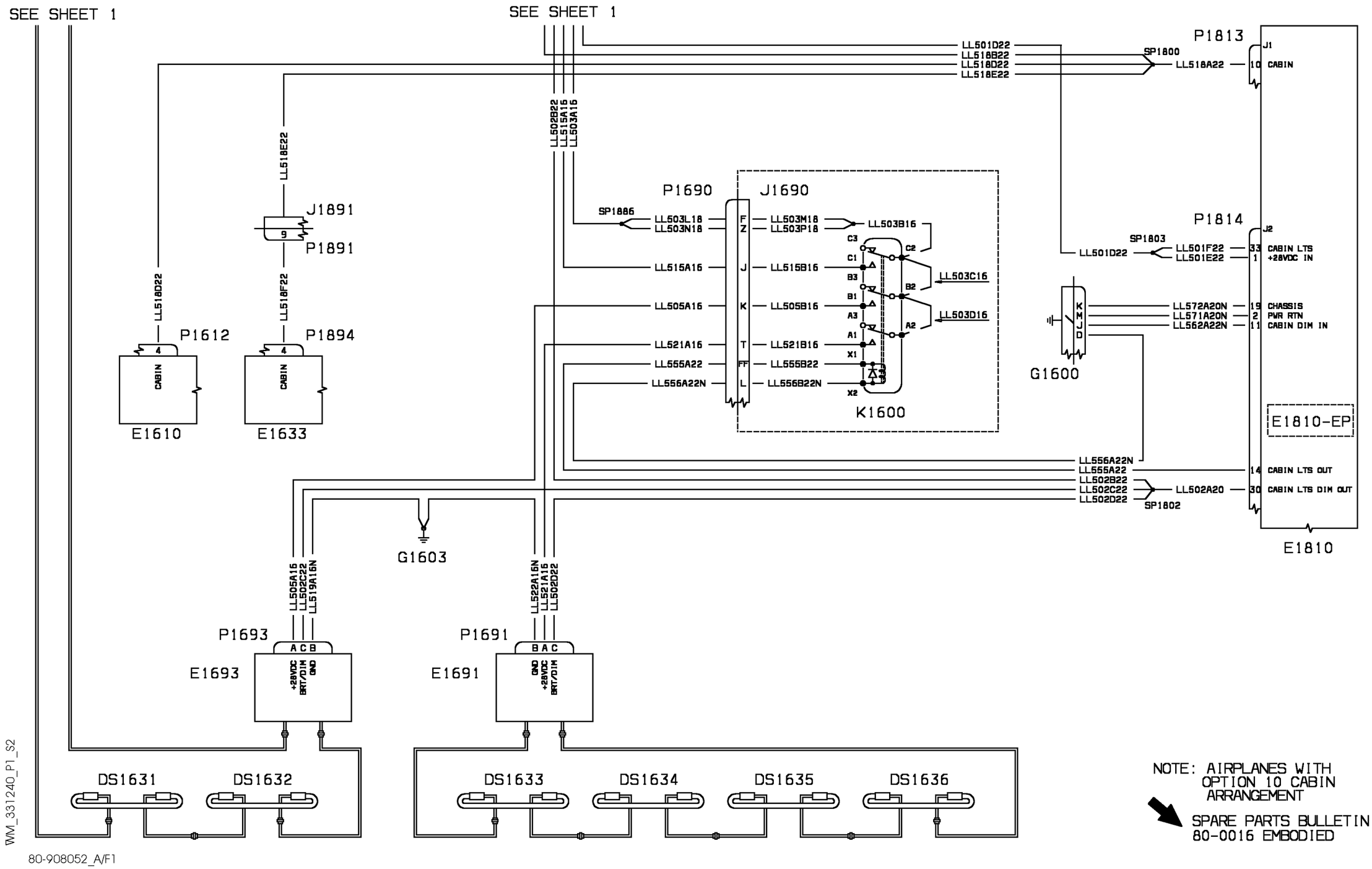
SEE SHEET 1
SEE SHEET 1
LL501D22
LL518B22
LL518D22
LL518E22
SP1800
P1813
J1
LL518A22
10
CABIN
LL502B22
LL515A16
LL503A16
LL518E22
J1891
9
P1891
LL518D22
LL518F22
P1612
P1894
4
CABIN
E1610
E1633
P1690
J1690
SP1886
LL503L18
LL503N18
F
Z
LL503M18
LL503P18
LL503B16
C3
C2
C1
B3
B2
B1
A3
A2
A1
X1
X2
LL503C16
LL503D16
LL515A16
J
LL515B16
LL505A16
K
LL505B16
LL521A16
T
LL521B16
LL555A22
FF
LL555B22
LL556A22N
L
LL556B22N
K1600
P1814
J2
SP1803
LL501D22
LL501F22
LL501E22
33
CABIN LTS
1
+28VDC IN
G1600
K
M
J
D
LL572A20N
LL571A20N
LL562A22N
19
CHASSIS
2
PWR RTN
11
CABIN DIM IN
E1810-EP
LL556A22N
LL555A22
LL502B22
LL502C22
LL502D22
LL502A20
SP1802
14
CABIN LTS OUT
30
CABIN LTS DIM OUT
E1810
G1603
LL505A15
LL502C22
LL519A16N
LL522A16N
LL521A15
LL502D22
P1693
P1691
A C B
B A C
E1693
E1691
+28VDC
BRT/DIM
GND
DS1631
DS1632
DS1633
DS1634
DS1635
DS1636
NOTE: AIRPLANES WITH OPTION 10 CABIN ARRANGEMENT
SPARE PARTS BULLETIN 80-0016 EMBODIED
WM_331240_P1_S2
80-908052_A/F1

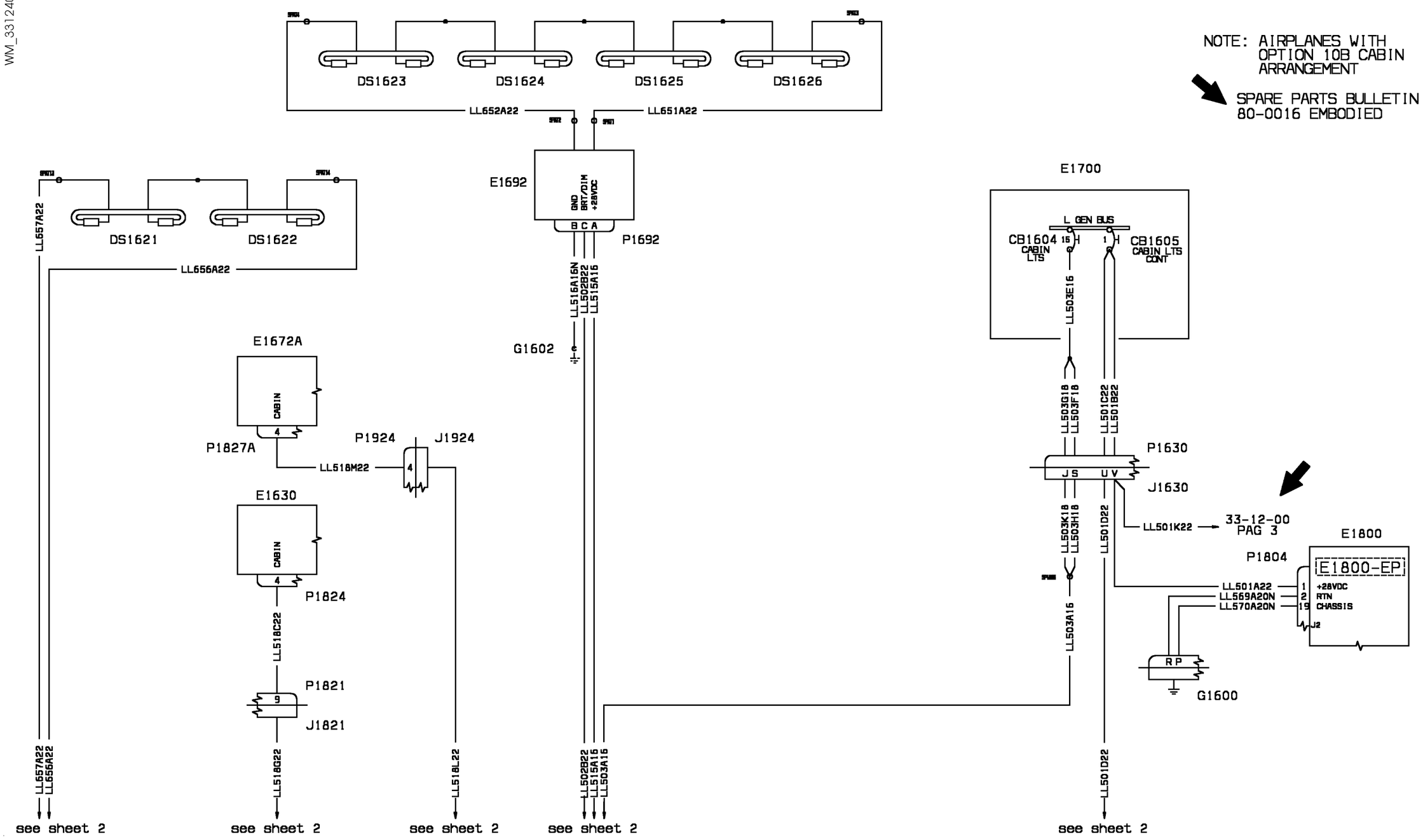
DS1623
DS1624
DS1625
DS1626
LL652A22
LL651A22
E1692
GND
BRT/DIM
+28VDC
B C A
P1692
LL516A16N
LL502B22
LL515A16
G1602
DS1621
DS1622
LL557A22
LL656A22
E1672A
CABIN
4
P1827A
P1924
J1924
LL518M22
E1630
CABIN
4
P1824
LL518C22
P1821
9
J1821
LL518G22
LL518L22
LL557A22
LL656A22
see sheet 2
see sheet 2
see sheet 2
see sheet 2
NOTE: AIRPLANES WITH OPTION 10B CABIN ARRANGEMENT
SPARE PARTS BULLETIN 80-0016 EMBODIED
E1700
L GEN BUS
CB1604
CABIN LTS
15 H
1 H
CB1605
CABIN LTS CONT
LL503E16
LL503G18
LL503F18
LL501C22
LL501B22
P1630
J1630
J S
U V
LL503K18
LL503H18
LL503A16
LL501D22
LL501K22
33-12-00
PAG 3
E1800
P1804
E1800-EP
LL501A22
LL569A20N
LL570A20N
1 +28VDC
2 RTN
19 CHASSIS
J2
R P
G1600
LL502B22
LL515A16
LL503A16
LL501D22
see sheet 2
see sheet 2

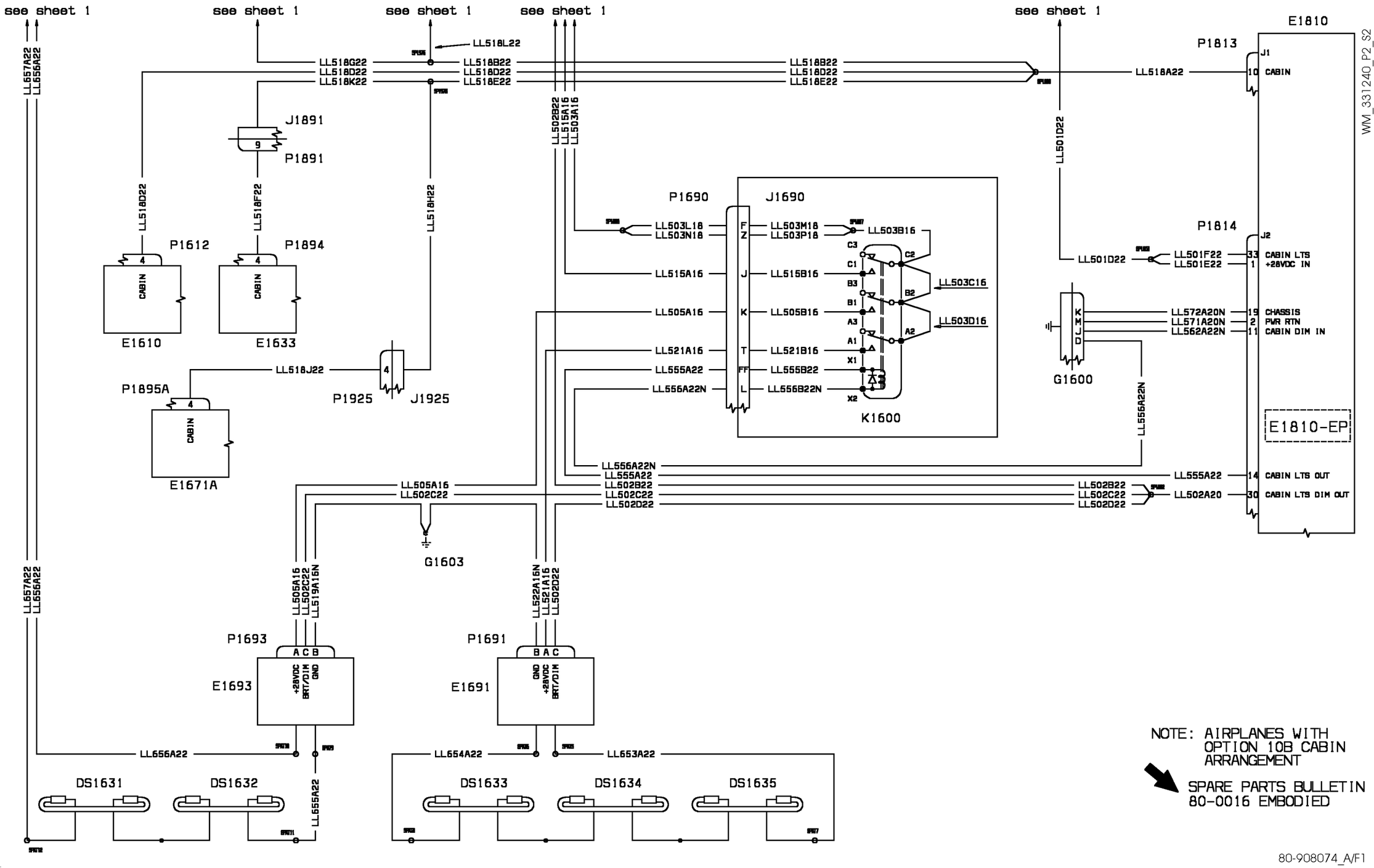


NOTE: AIRPLANES WITH OPTION 10B CABIN ARRANGEMENT

SPARE PARTS BULLETIN 80-0016 EMBODIED

80-908074_A/F1

80-908315_A/F1

WM_331240_P3_S1

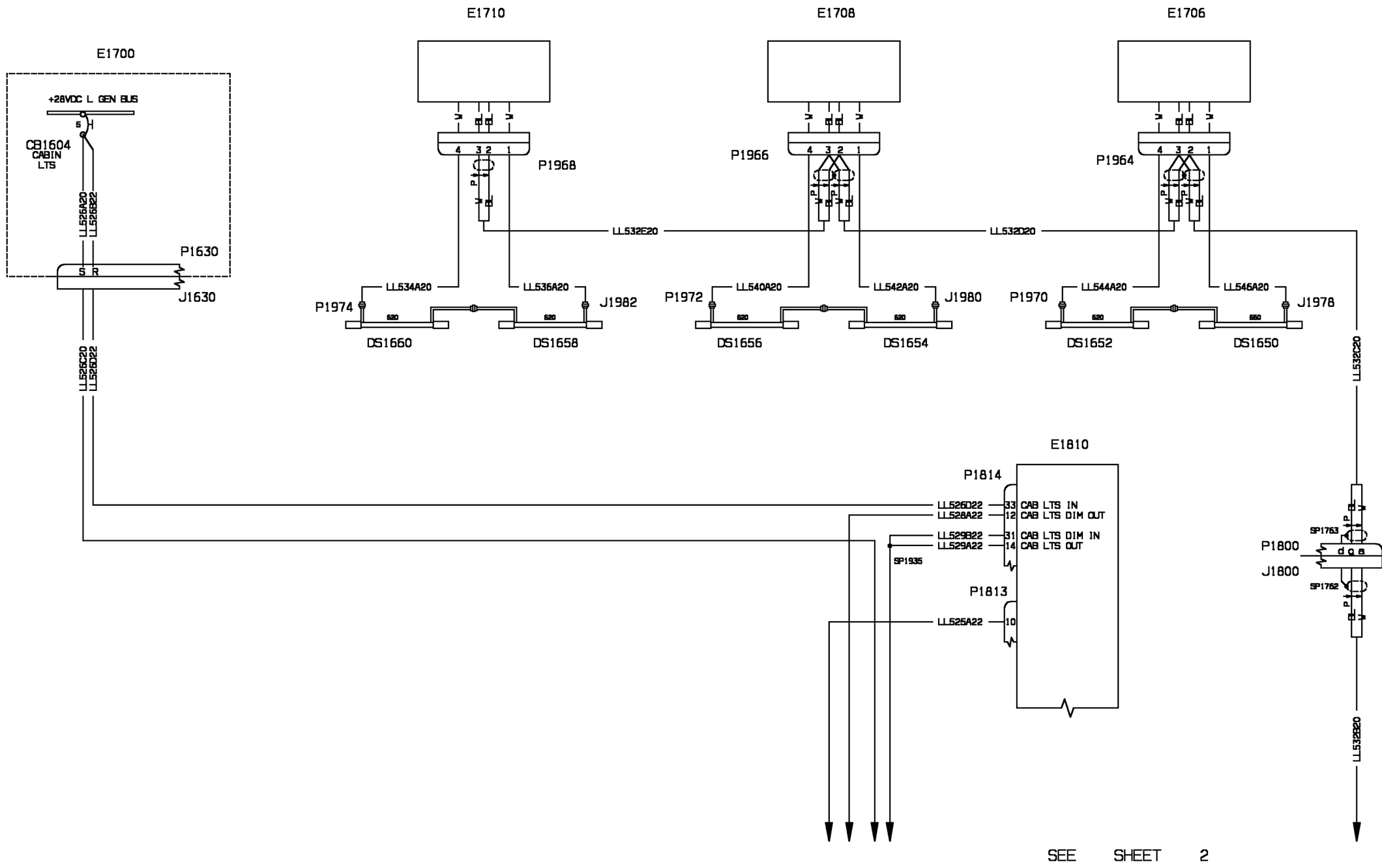


| EFFECTIVITY: | FLIGHT COMPARTMENT |
|---|---|
| 1041,1047,1053,1058, 1071,1075,1078,1082, 1082,1087,1094,1096 | Cabin Lights (Opt. 10 SMA) |

**33-12-40**

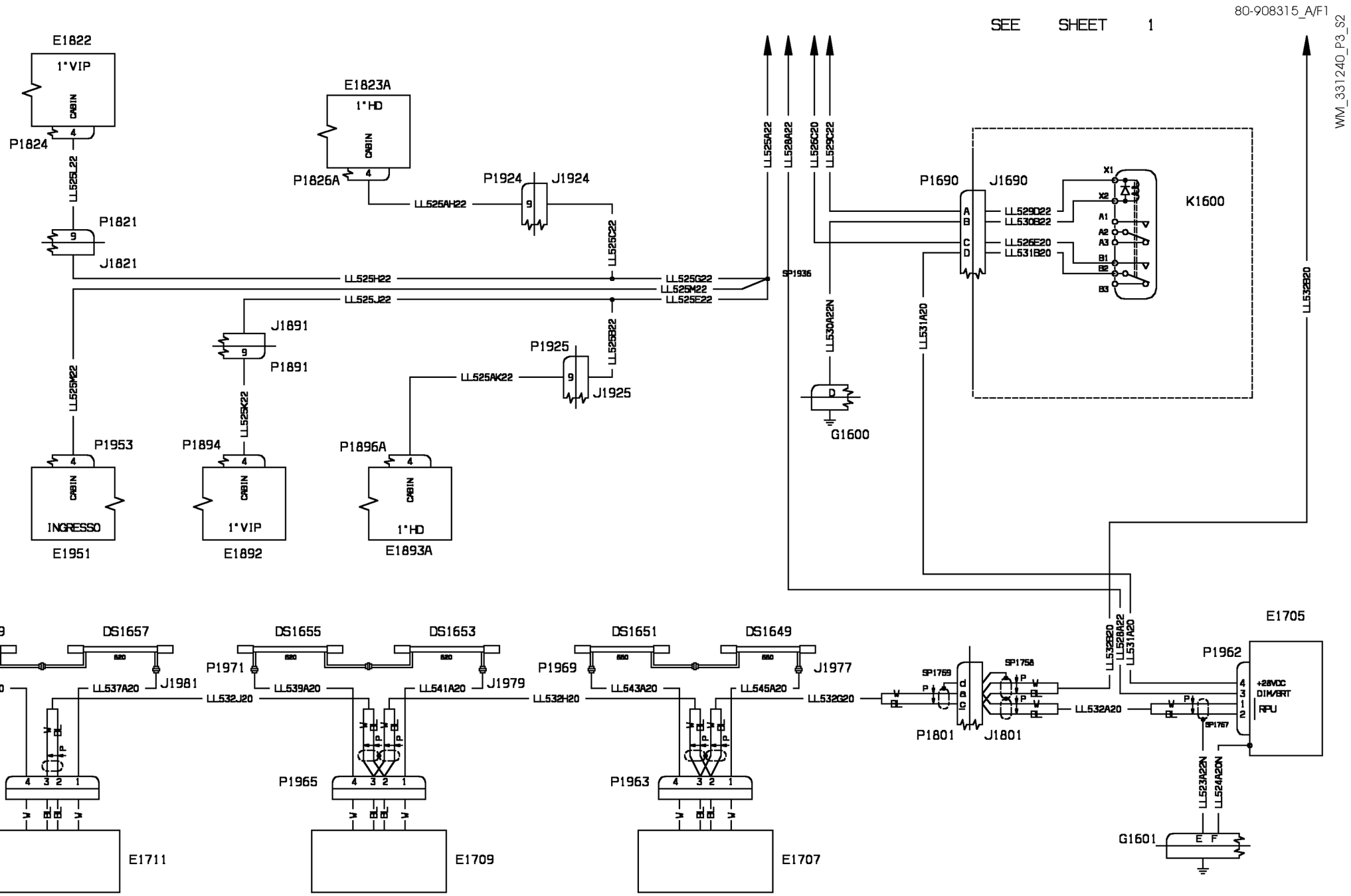


| EFFECTIVITY: | FLIGHT COMPARTMENT |
|---|---|
| 1041,1047,1053,1058, 1071,1075,1078,1082, 1082,1087,1094,1096 | Cabin Lights (Opt. 10 SMA) |

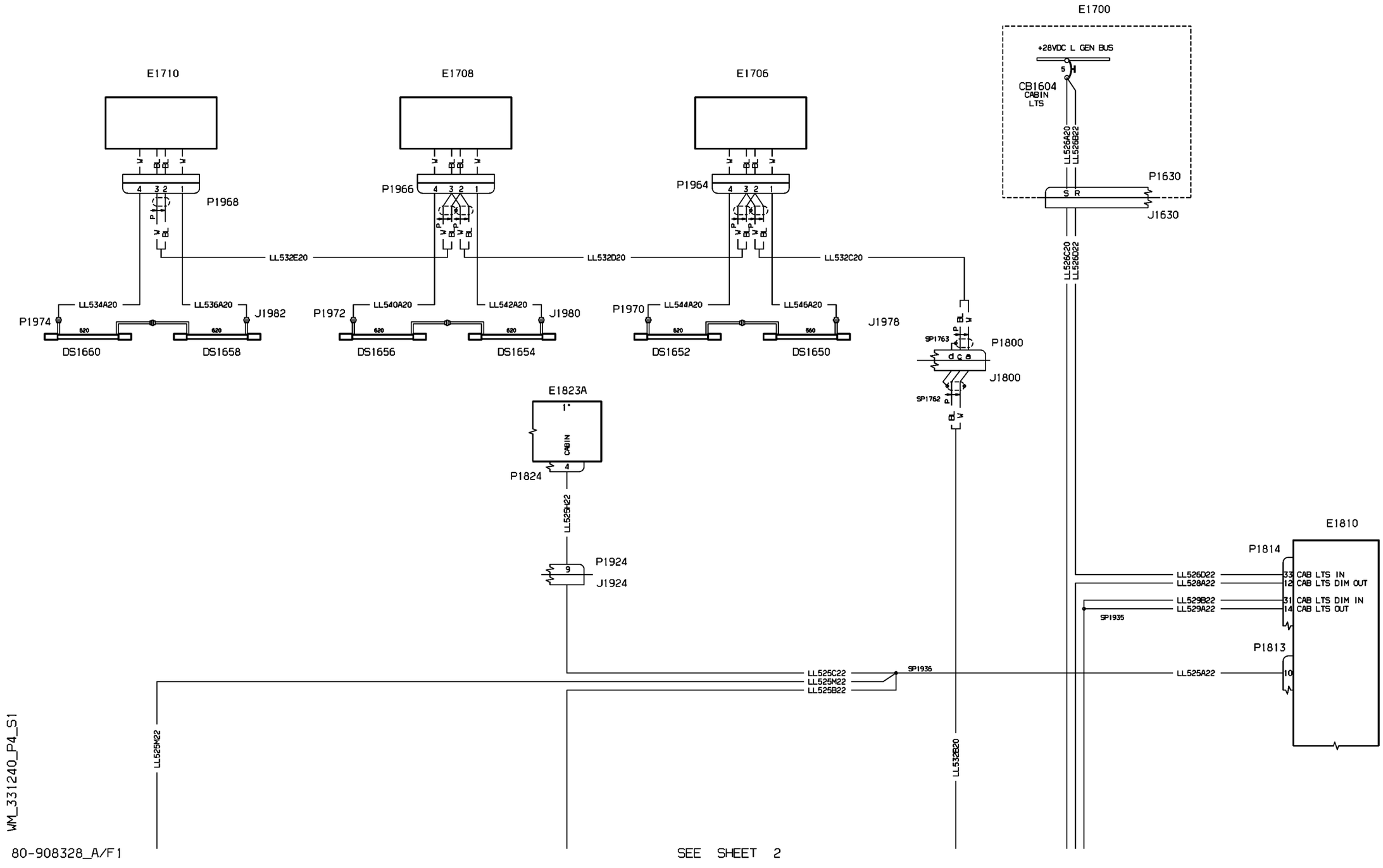


| EFFECTIVITY: | FLIGHT COMPARTMENT |
|---|---|
| 1076,1085,1090 | Cabin Lights (Opt. 10 M.M. ) |

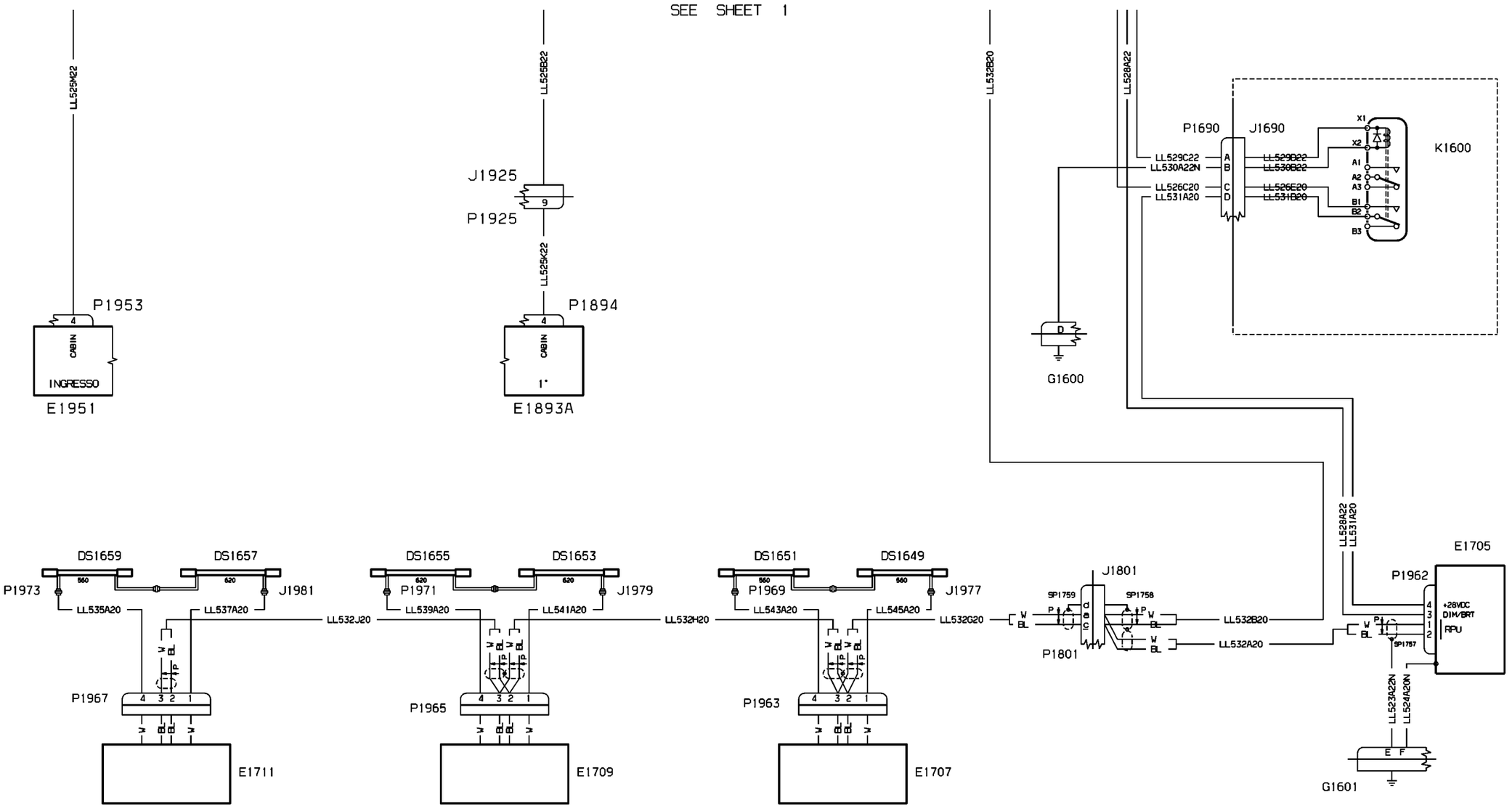


WM_331240_P4_S2

80-908328_A/F1

| EFFECTIVITY: | FLIGHT COMPARTMENT |
|---|---|
| 1076,1085,1090 | Cabin Lights (Opt. 10 M.M. ) |

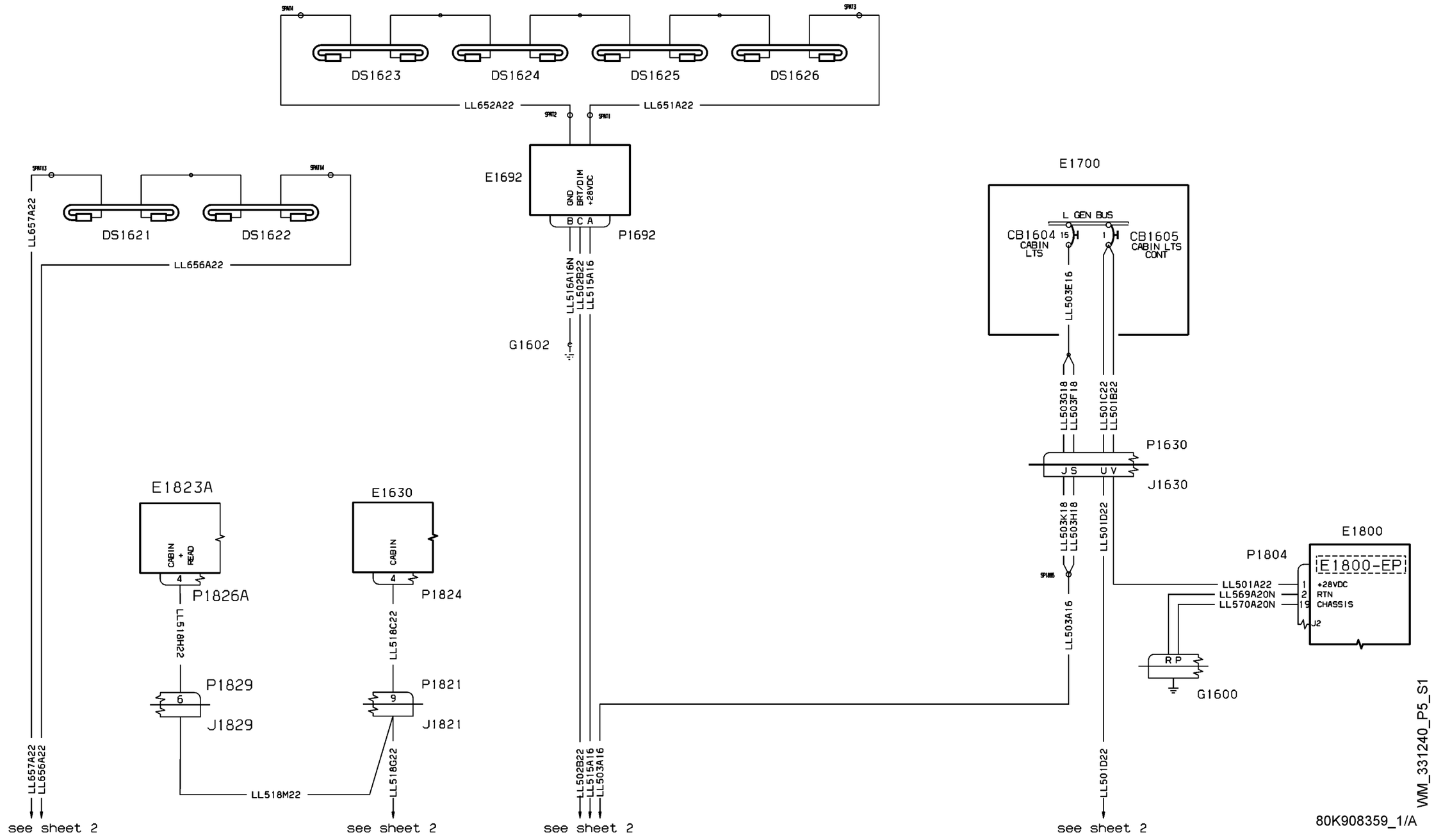


| EFFECTIVITY: | FLIGHT COMPARTMENT |
|---|---|
| 1023-1025,1028-1030 | Cabin Lights Upgrade (Opt. 10 AMI ) |

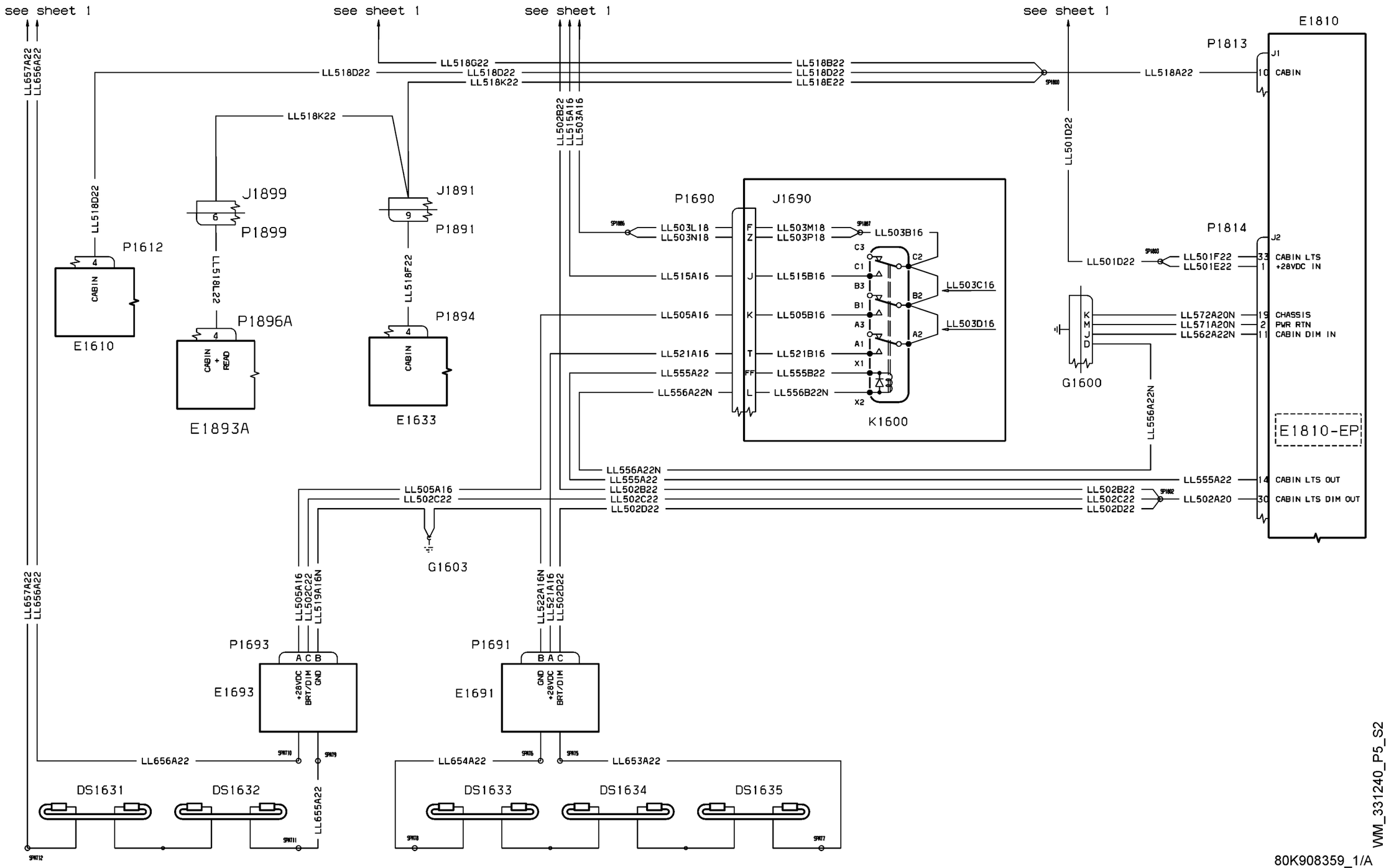


WM_331240_P5_S2

80K908359_1/A

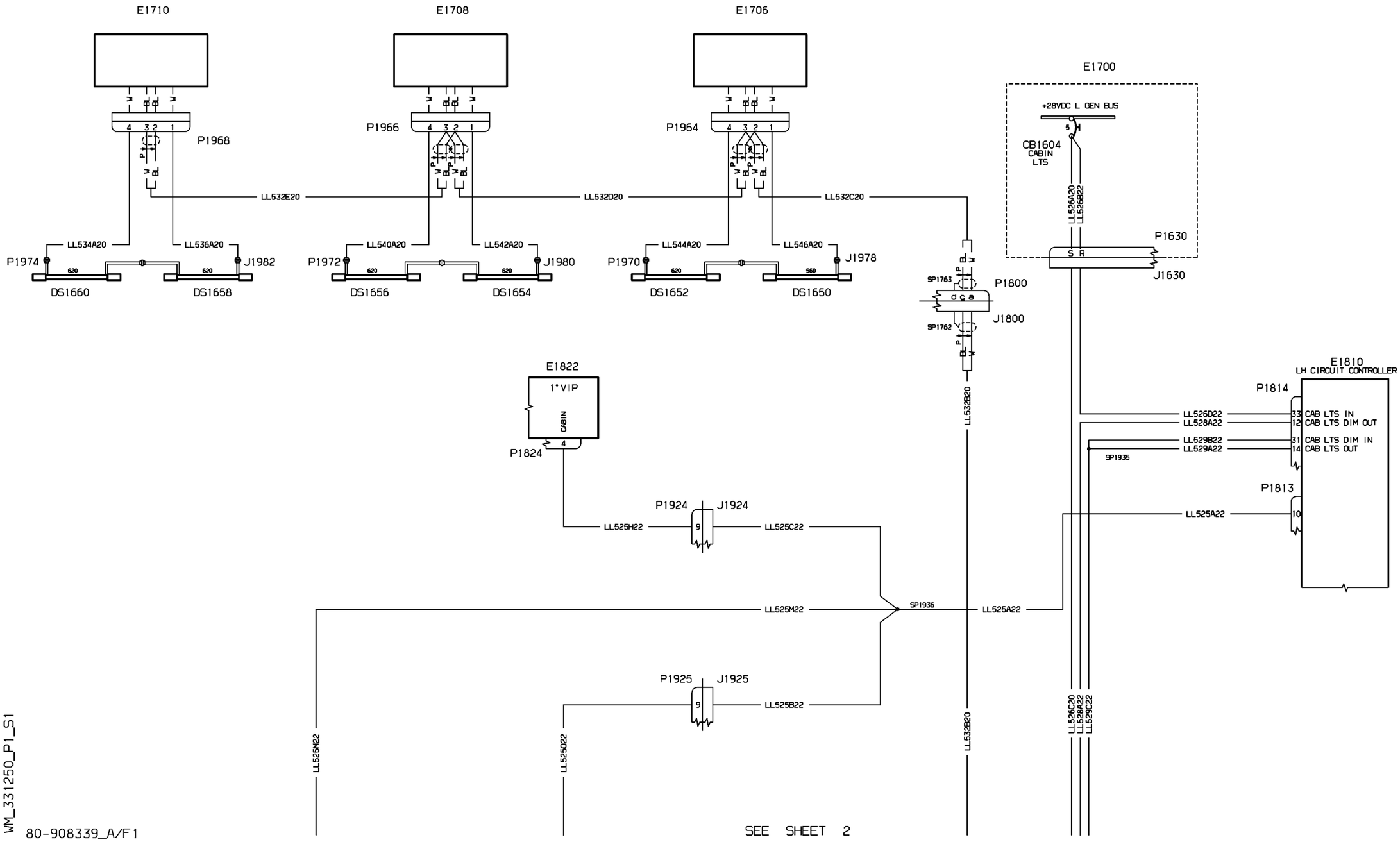


WM_331250_P1_S1

80-908339_A/F1

| EFFECTIVITY: | FLIGHT COMPARTMENT<br>Cabin Lights (Opt. 20 ) |
|---|---|

**33-12-50**

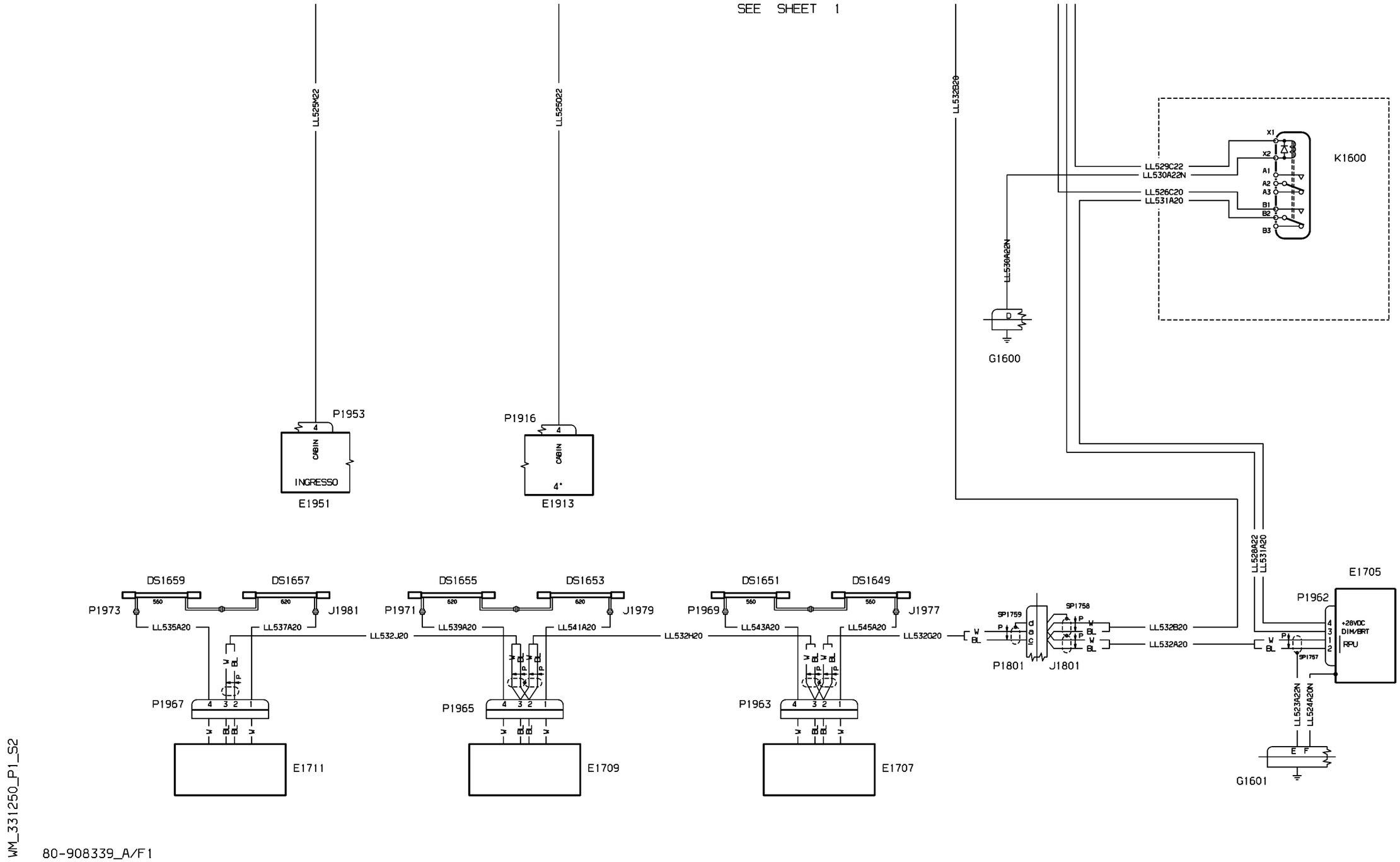


WM_331250_P1_S2

80-908339_A/F1

| EFFECTIVITY: | FLIGHT COMPARTMENT<br>Cabin Lights (Opt. 20 ) |
|---|---|

**33-12-50**

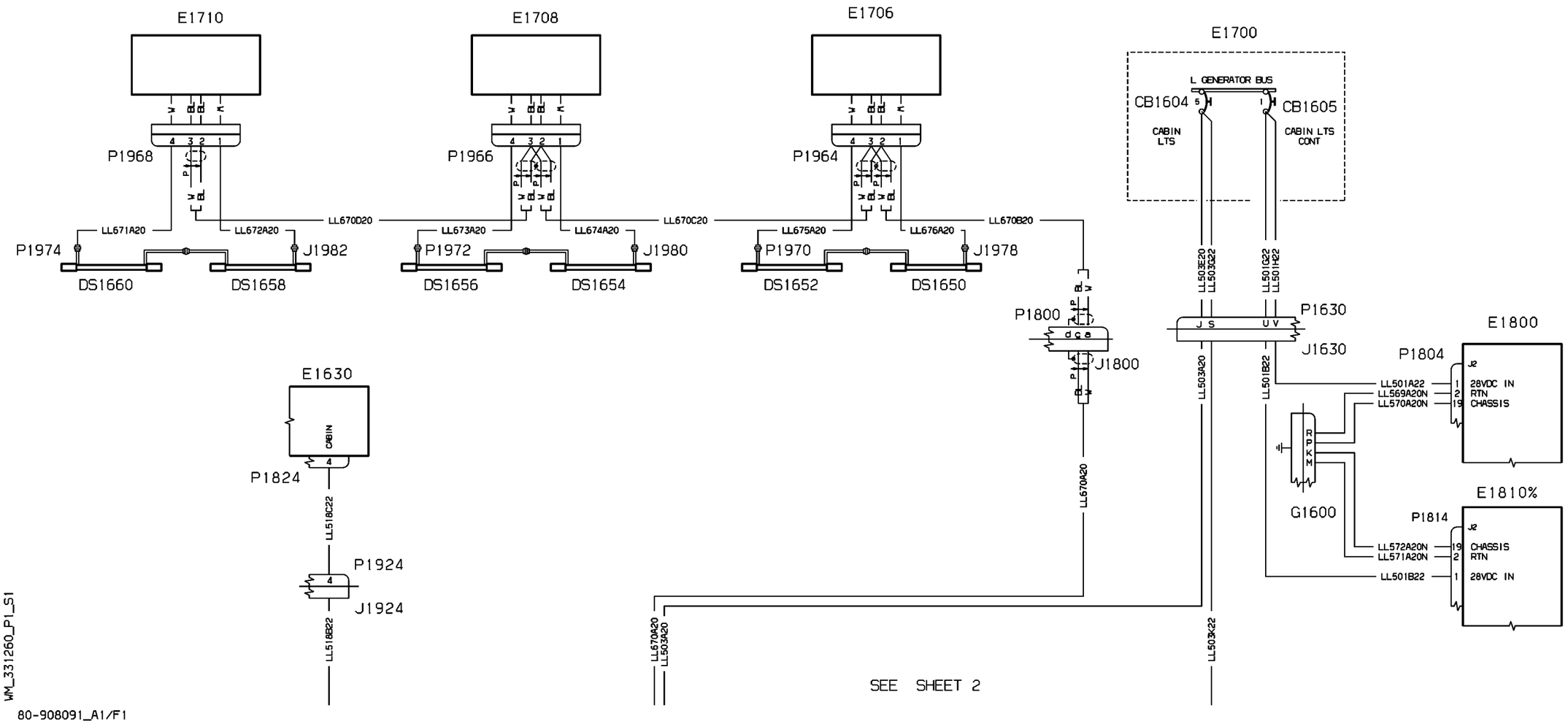


| EFFECTIVITY: | FLIGHT COMPARTMENT<br>Cabin Lights (Opt. 17 ) |
|---|---|

**33-12-60**

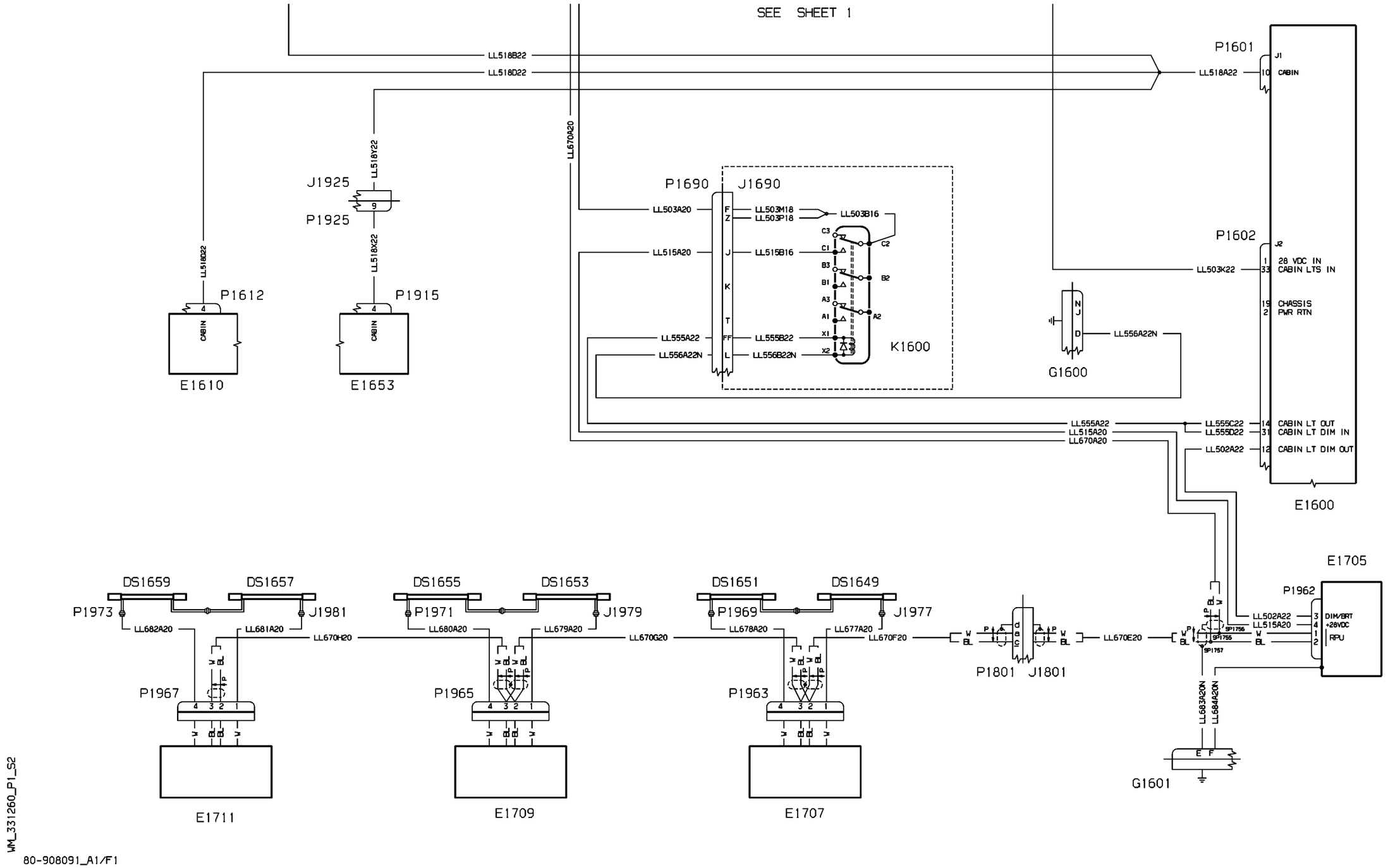


WM_331260_P1_S2

80-908091_A1/F1

| EFFECTIVITY: | FLIGHT COMPARTMENT<br>Cabin Lights (Opt. 17 ) |
|---|---|

**33-12-60**

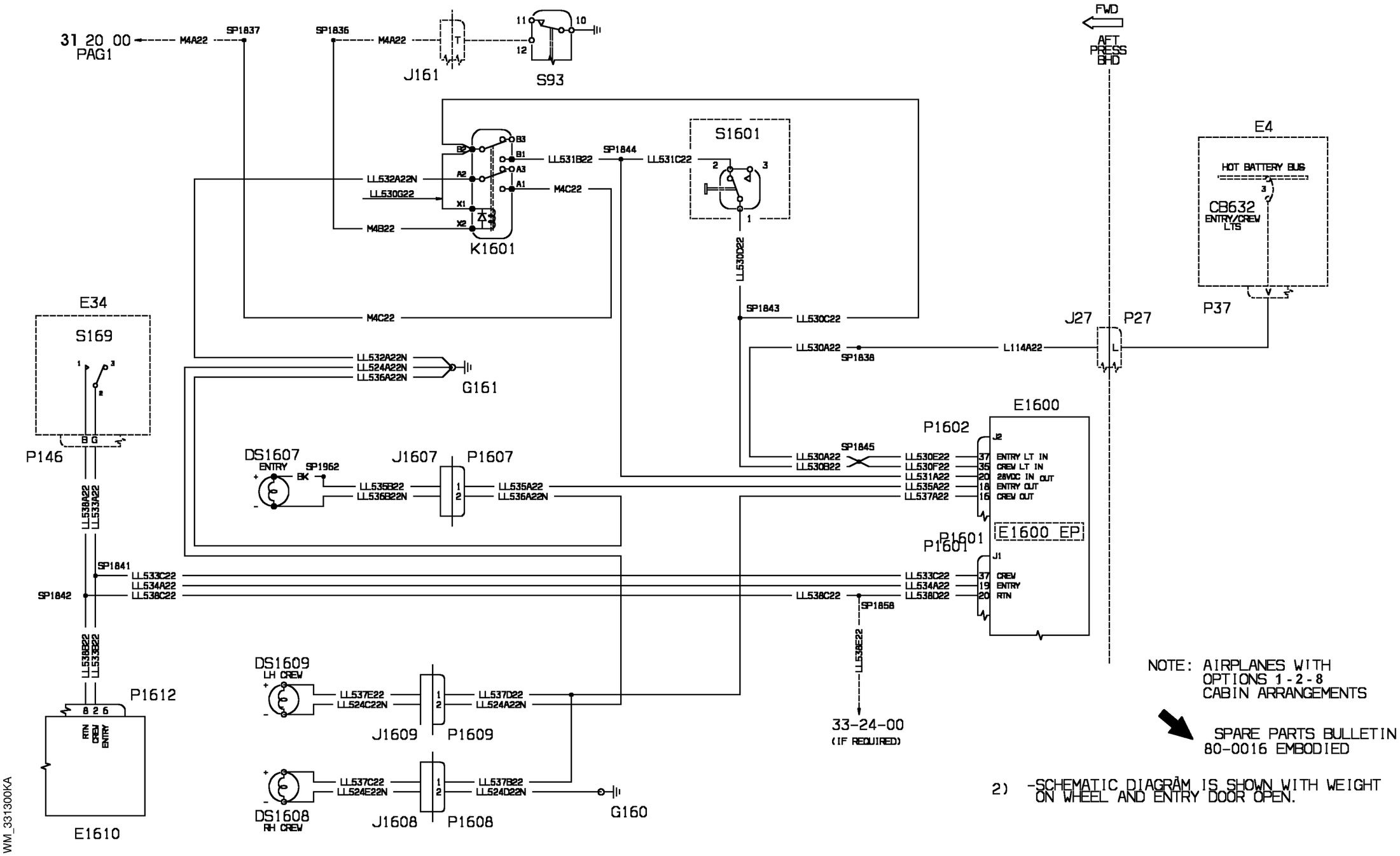
31 20 00
PAG1
M4A22
SP1837
SP1836
M4A22
J161
S93
FWD
AFT PRESS BHD
E4
HOT BATTERY BUS
CB632
ENTRY/CREW LTS
P37
S1601
SP1844
LL531B22
LL531C22
K1601
LL532A22N
LL530G22
M4B22
M4C22
LL530D22
SP1843
LL530C22
J27
P27
L114A22
SP1838
LL530A22
E34
S169
P146
LL532A22N
LL524A22N
LL536A22N
G161
E1600
P1602
SP1845
LL530E22
LL530F22
LL531A22
LL535A22
LL537A22
ENTRY LT IN
CREW LT IN
28VDC IN OUT
ENTRY OUT
CREW OUT
E1600 EP
P1601
DS1607
ENTRY
SP1962
BK
LL535B22
LL536B22N
J1607
P1607
LL538A22
LL533A22
SP1841
SP1842
LL533C22
LL534A22
LL538C22
CREW
ENTRY
RTN
SP1858
LL538E22
33-24-00
(IF REQUIRED)
LL538B22
LL533B22
P1612
RTN
CREW
ENTRY
E1610
DS1609
LH CREW
LL537E22
LL524C22N
J1609
P1609
LL537D22
LL524A22N
DS1608
RH CREW
LL537C22
LL524E22N
J1608
P1608
LL537B22
LL524D22N
G160
NOTE: AIRPLANES WITH OPTIONS 1-2-8 CABIN ARRANGEMENTS
SPARE PARTS BULLETIN 80-0016 EMBODIED
2) -SCHEMATIC DIAGRAM IS SHOWN WITH WEIGHT ON WHEEL AND ENTRY DOOR OPEN.
WM_331300KA

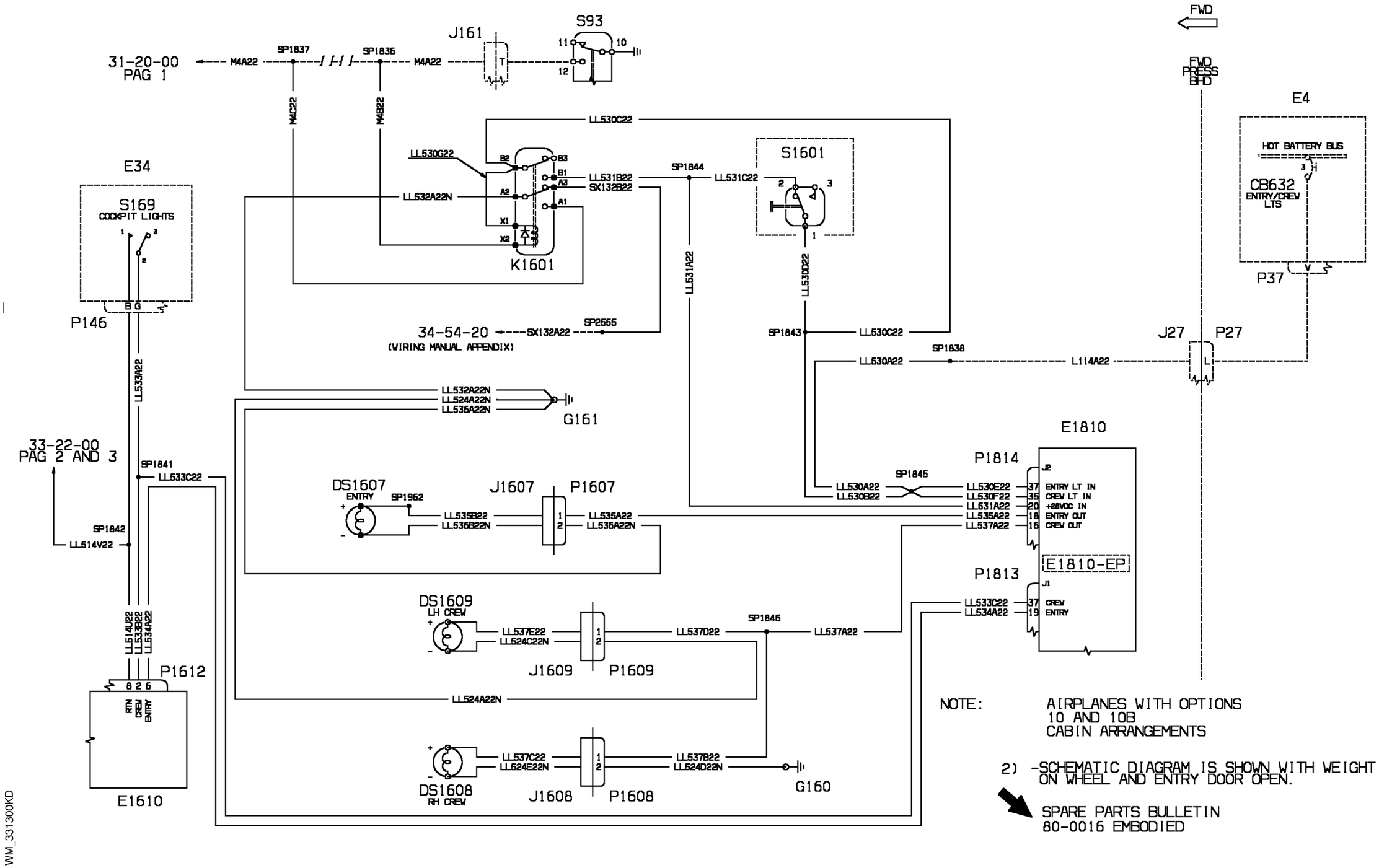
31-20-00
PAG 1
M4A22
SP1837
SP1836
M4A22
J161
S93
11
10
12
M4C22
M4B22
LL530C22
LL530G22
B2
B3
B1
A3
A2
A1
X1
X2
K1601
LL531B22
SX132B22
SP1844
LL531C22
S1601
2
3
1
LL532A22N
LL531A22
LL530D22
E34
S169
COCKPIT LIGHTS
1
3
2
B G
P146
34-54-20
(WIRING MANUAL APPENDIX)
SX132A22
SP2555
SP1843
LL530C22
LL530A22
SP1838
L114A22
J27
P27
L
LL532A22N
LL524A22N
LL536A22N
G161
E1810
P1814
J2
SP1845
LL530E22
LL530F22
LL531A22
LL535A22
LL537A22
37 ENTRY LT IN
35 CREW LT IN
20 +28VDC IN
18 ENTRY OUT
16 CREW OUT
LL530B22
E1810-EP
P1813
J1
LL533C22
LL534A22
37 CREW
19 ENTRY
33-22-00
PAG 2 AND 3
SP1841
LL533C22
SP1842
LL514V22
DS1607
ENTRY
SP1962
LL535B22
LL536B22N
J1607
P1607
1
2
LL535A22
LL536A22N
LL514U22
LL533B22
LL534A22
P1612
8 2 6
RTN
CREW
ENTRY
E1610
DS1609
LH CREW
LL537E22
LL524C22N
J1609
P1609
LL537D22
SP1845
LL537A22
LL524A22N
DS1608
RH CREW
LL537C22
LL524E22N
J1608
P1608
LL537B22
LL524D22N
G160
FWD
FWD
PRESS
BHD
E4
HOT BATTERY BUS
3
1
CB632
ENTRY/CREW
LTS
P37
V
NOTE:
AIRPLANES WITH OPTIONS
10 AND 10B
CABIN ARRANGEMENTS
2) -SCHEMATIC DIAGRAM IS SHOWN WITH WEIGHT
ON WHEEL AND ENTRY DOOR OPEN.
SPARE PARTS BULLETIN
80-0016 EMBODIED
WM_331300KD

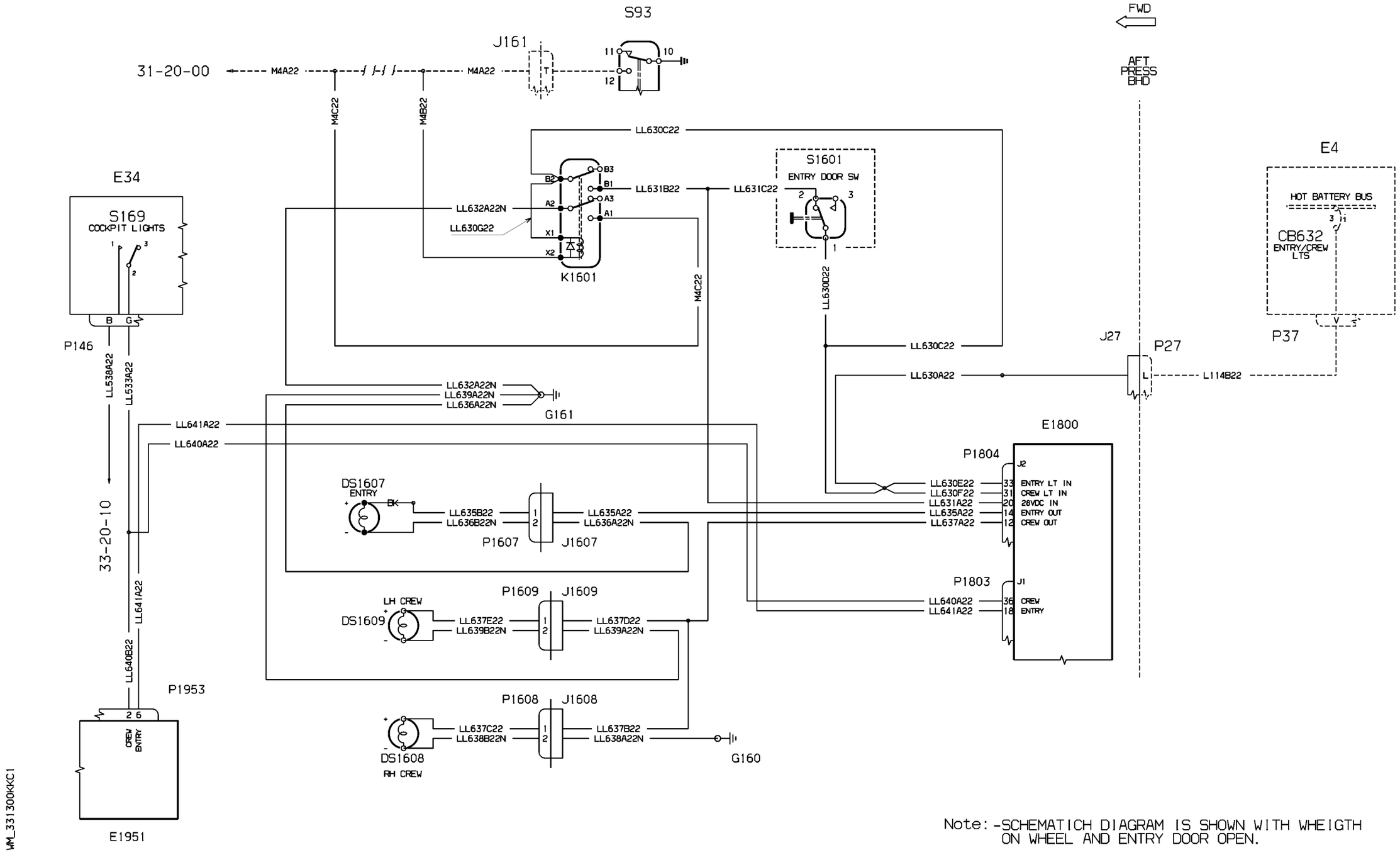


Note: -SCHEMATICH DIAGRAM IS SHOWN WITH WHEIGTH ON WHEEL AND ENTRY DOOR OPEN.

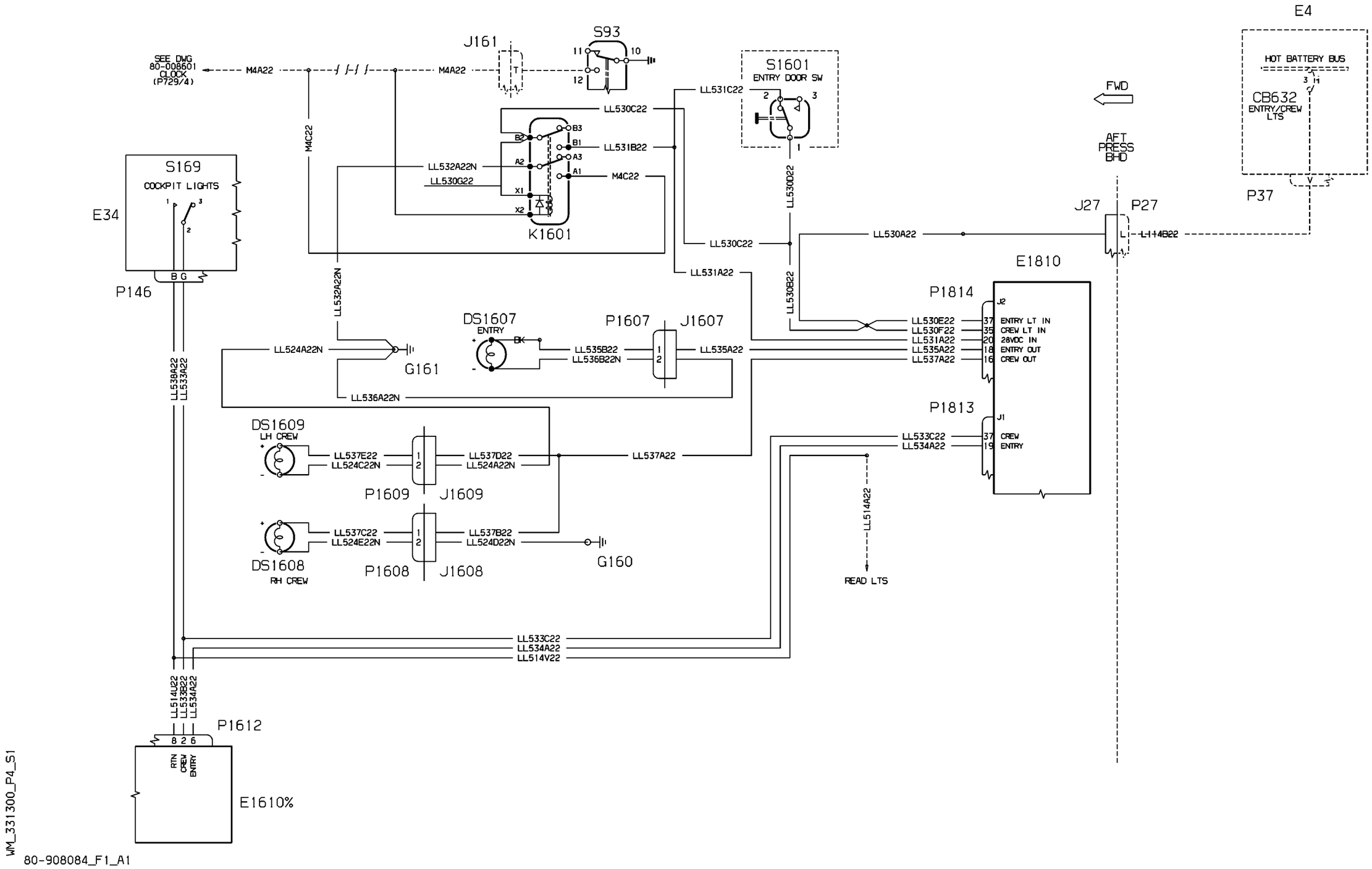


WM_331300_P4_S1

80-908084_F1_A1

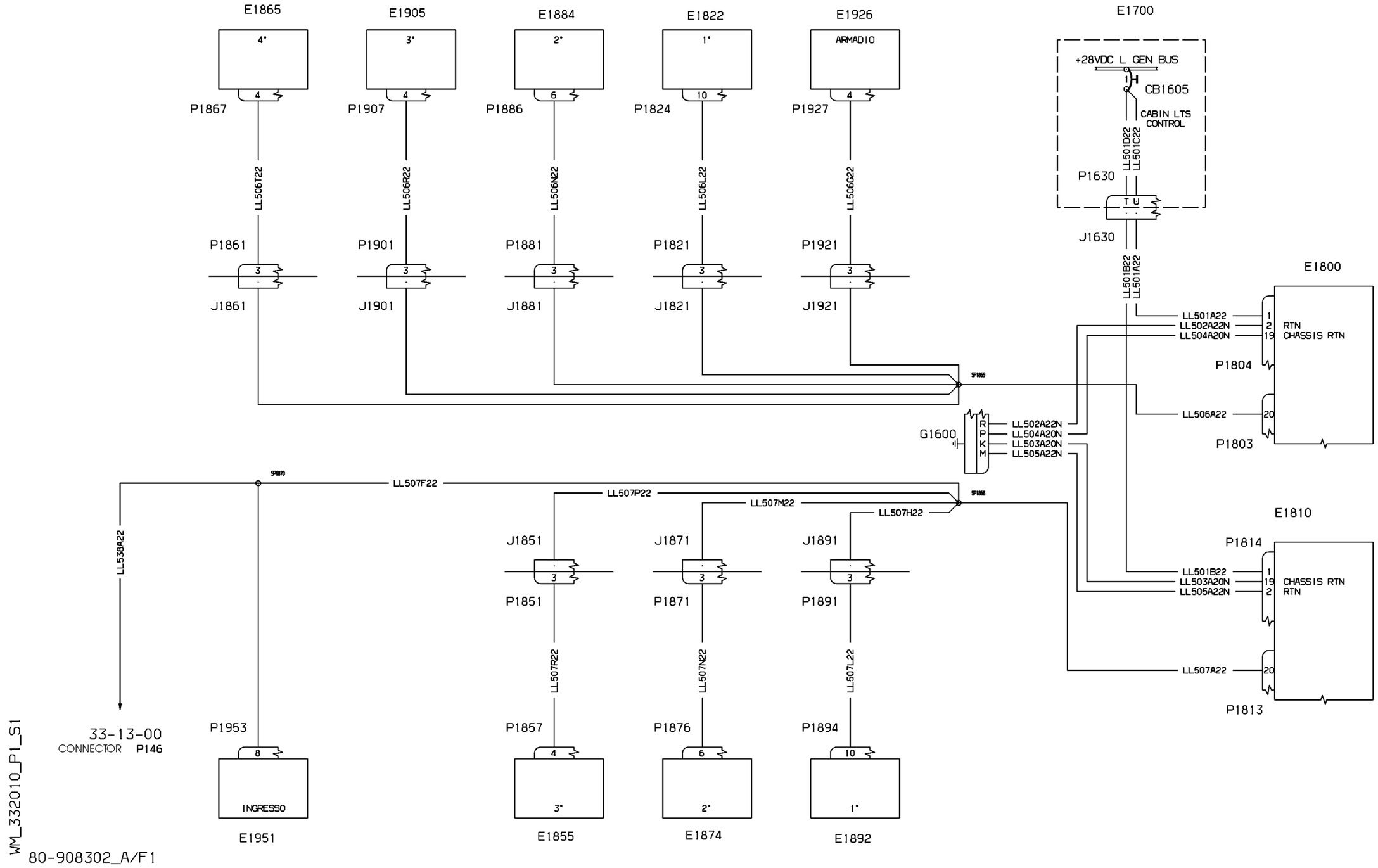


| EFFECTIVITY: | PASSENGER COMPARTMENT<br>Circuit CTRL pwr & return (OPT 1 & 19) |
|---|---|

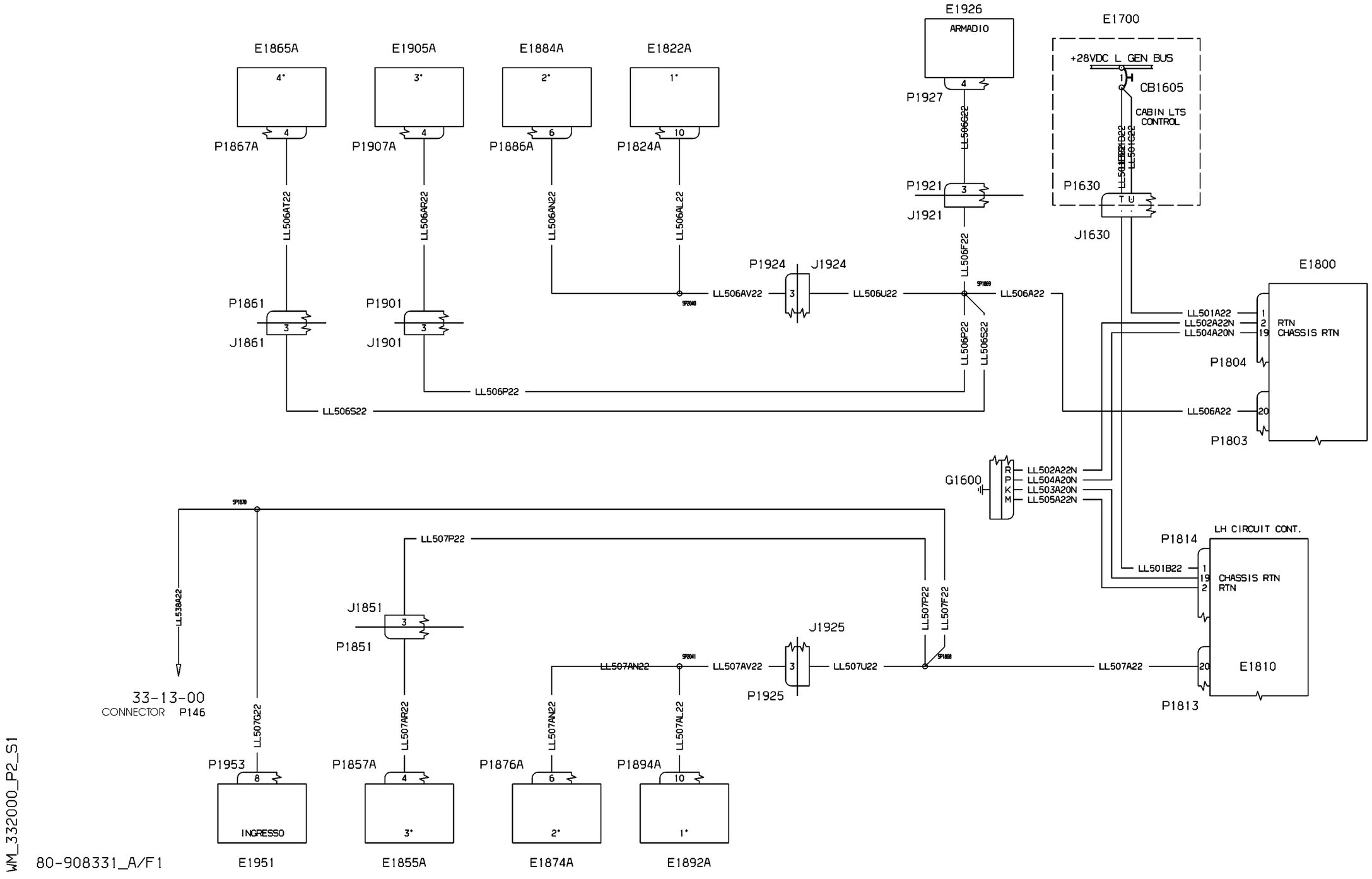
E1865A
E1905A
E1884A
E1822A
E1926
ARMADIO
E1700
+28VDC L GEN BUS
CB1605
CABIN LTS CONTROL
P1867A
P1907A
P1886A
P1824A
P1927
P1630
J1630
LL506AT22
LL506AR22
LL506AN22
LL506AL22
LL506G22
P1921
J1921
LL506F22
P1924
J1924
LL506AV22
LL506U22
LL506A22
P1861
J1861
P1901
J1901
LL506P22
LL506S22
E1800
LL501A22
LL502A22N
LL504A20N
RTN
CHASSIS RTN
P1804
P1803
G1600
LL502A22N
LL504A20N
LL503A20N
LL505A22N
LH CIRCUIT CONT.
P1814
LL501B22
CHASSIS RTN
RTN
E1810
P1813
LL507P22
LL507F22
J1925
P1925
LL507AN22
LL507AV22
LL507U22
LL507A22
J1851
P1851
LL538A22
33-13-00
CONNECTOR P146
LL507G22
LL507AR22
LL507AN22
LL507AL22
P1953
P1857A
P1876A
P1894A
INGRESSO
E1951
E1855A
E1874A
E1892A
WM_332000_P2_S1
80-908331_A/F1

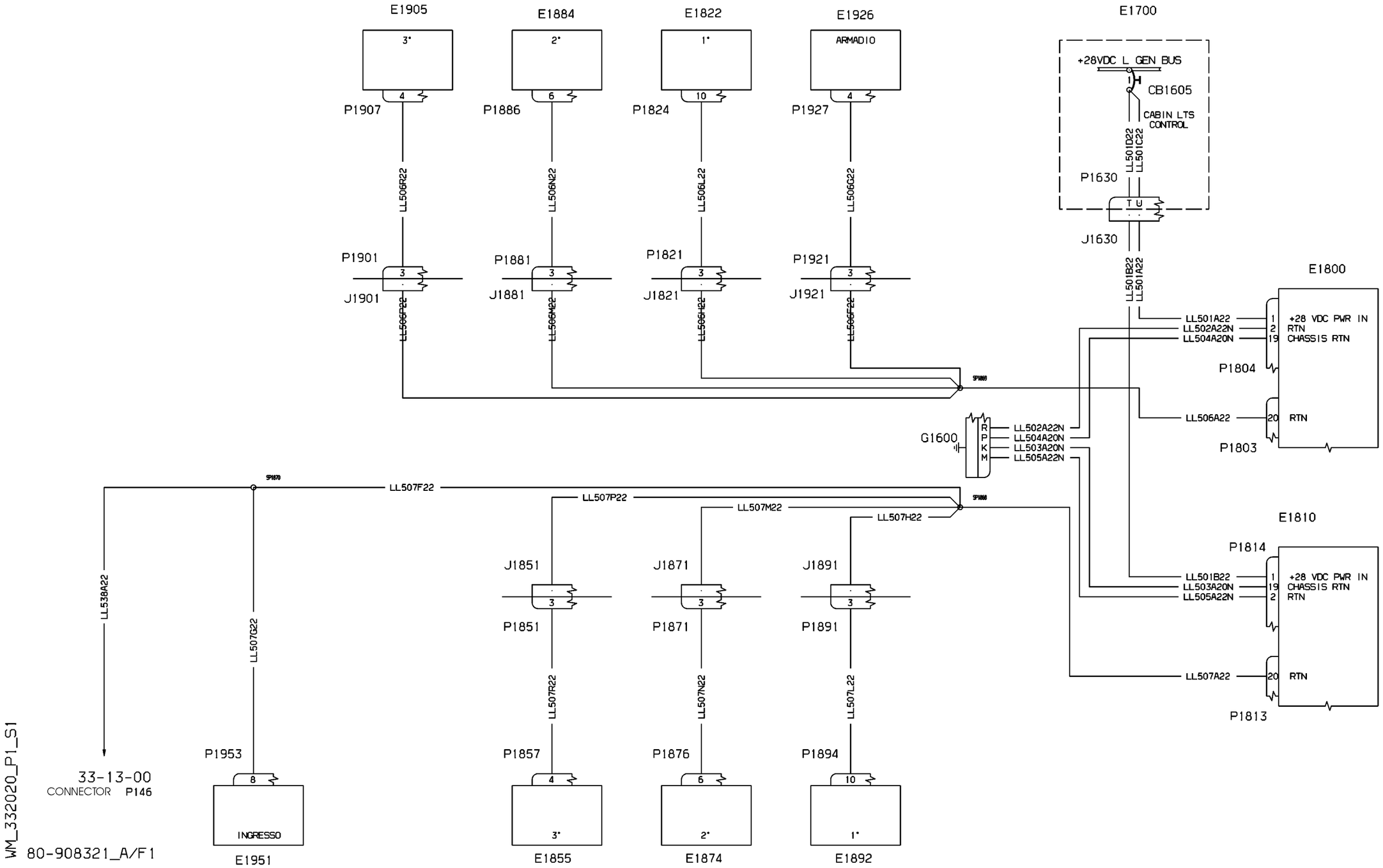


| EFFECTIVITY: | PASSENGER COMPARTMENT<br>Circuit CTRL pwr & return (OPT 2) |
|---|---|

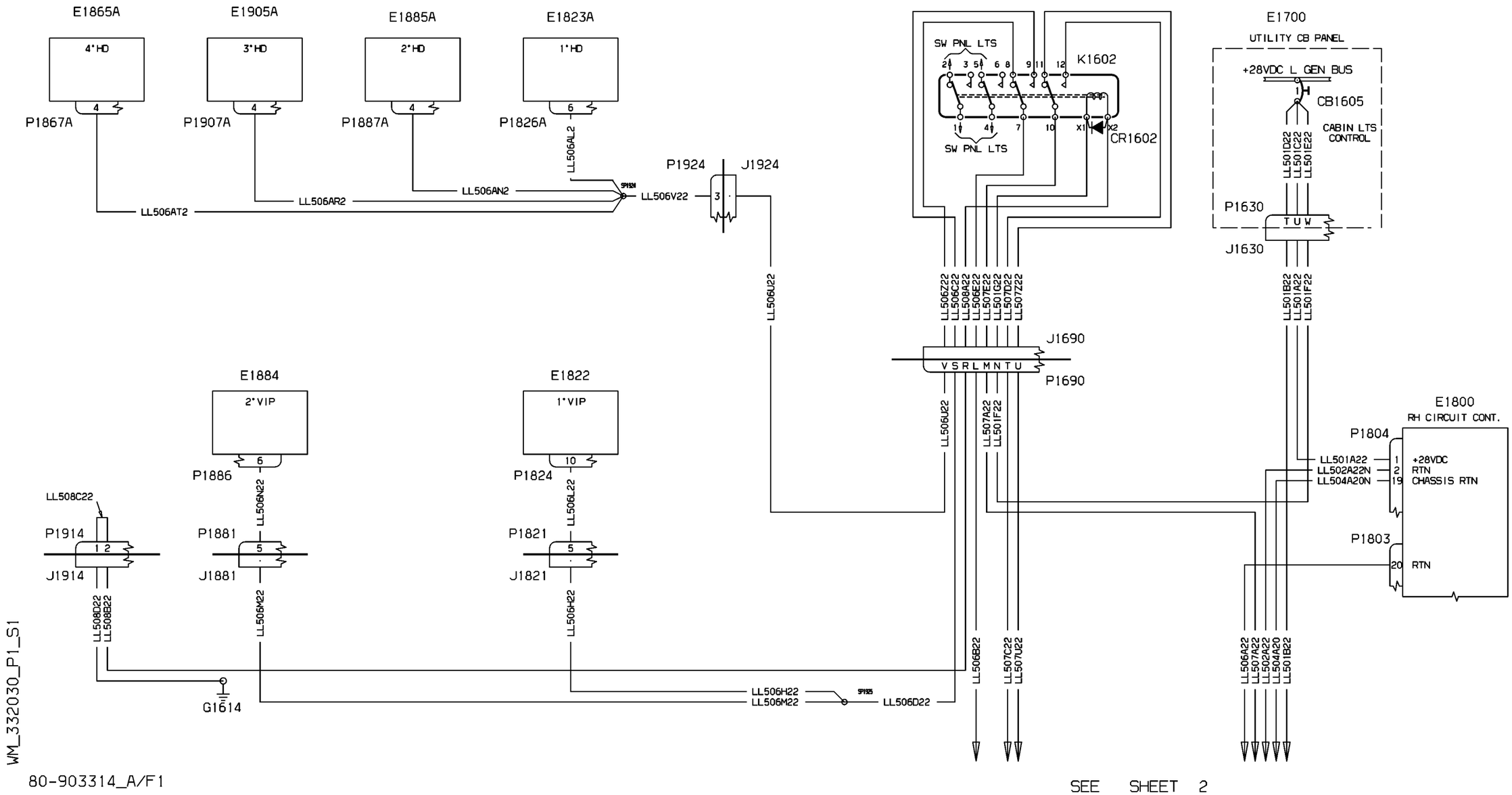


| EFFECTIVITY: | PASSENGER COMPARTMENT<br>Circuit CTRL pwr & return (OPT 10 ) |
|---|---|

**33-20-30**

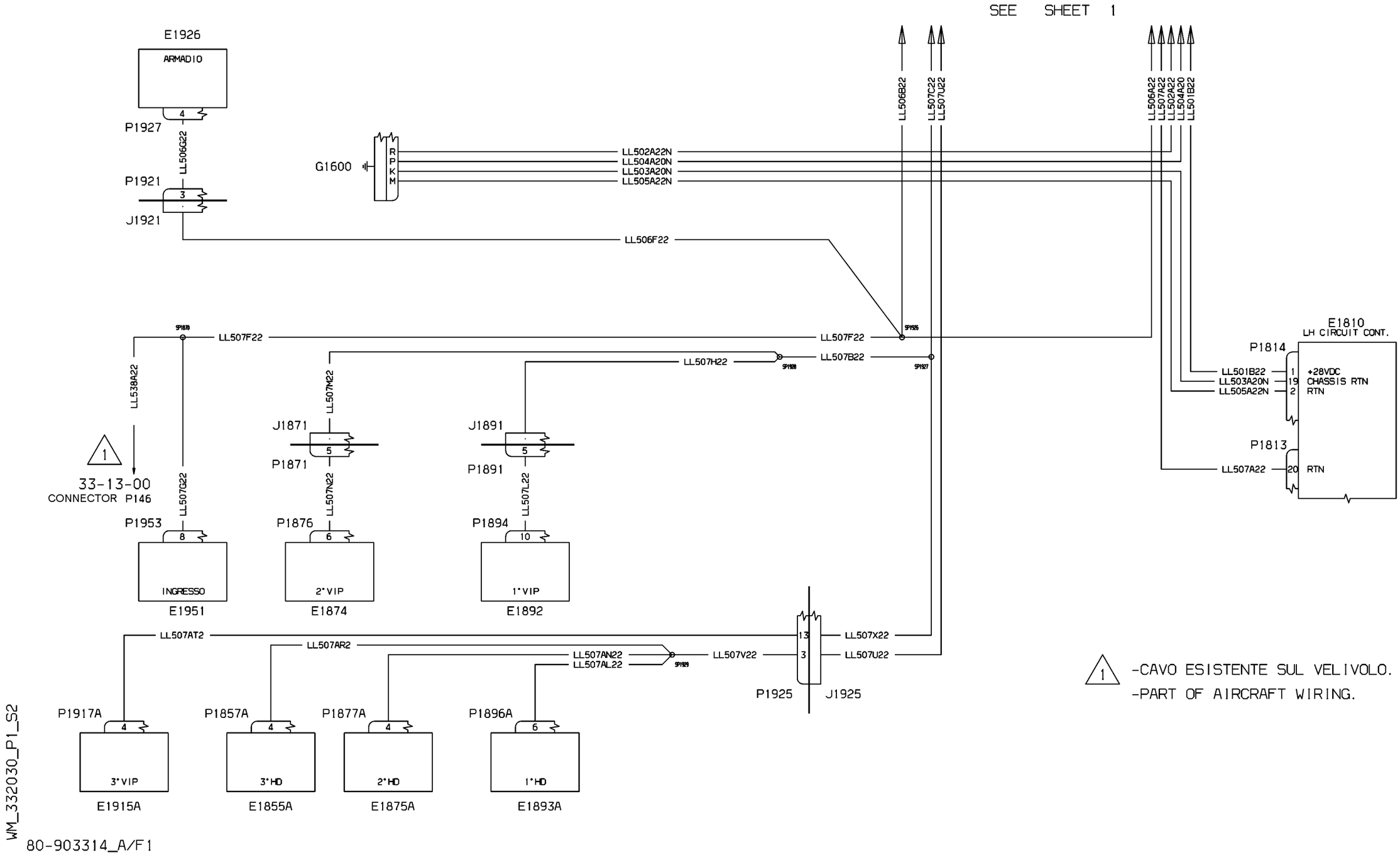


1 -CAVO ESISTENTE SUL VELIVOLO.
-PART OF AIRCRAFT WIRING.

| EFFECTIVITY: | PASSENGER COMPARTMENT<br>Circuit CTRL pwr & return (OPT 10 ) |
|---|---|

**33-20-30**

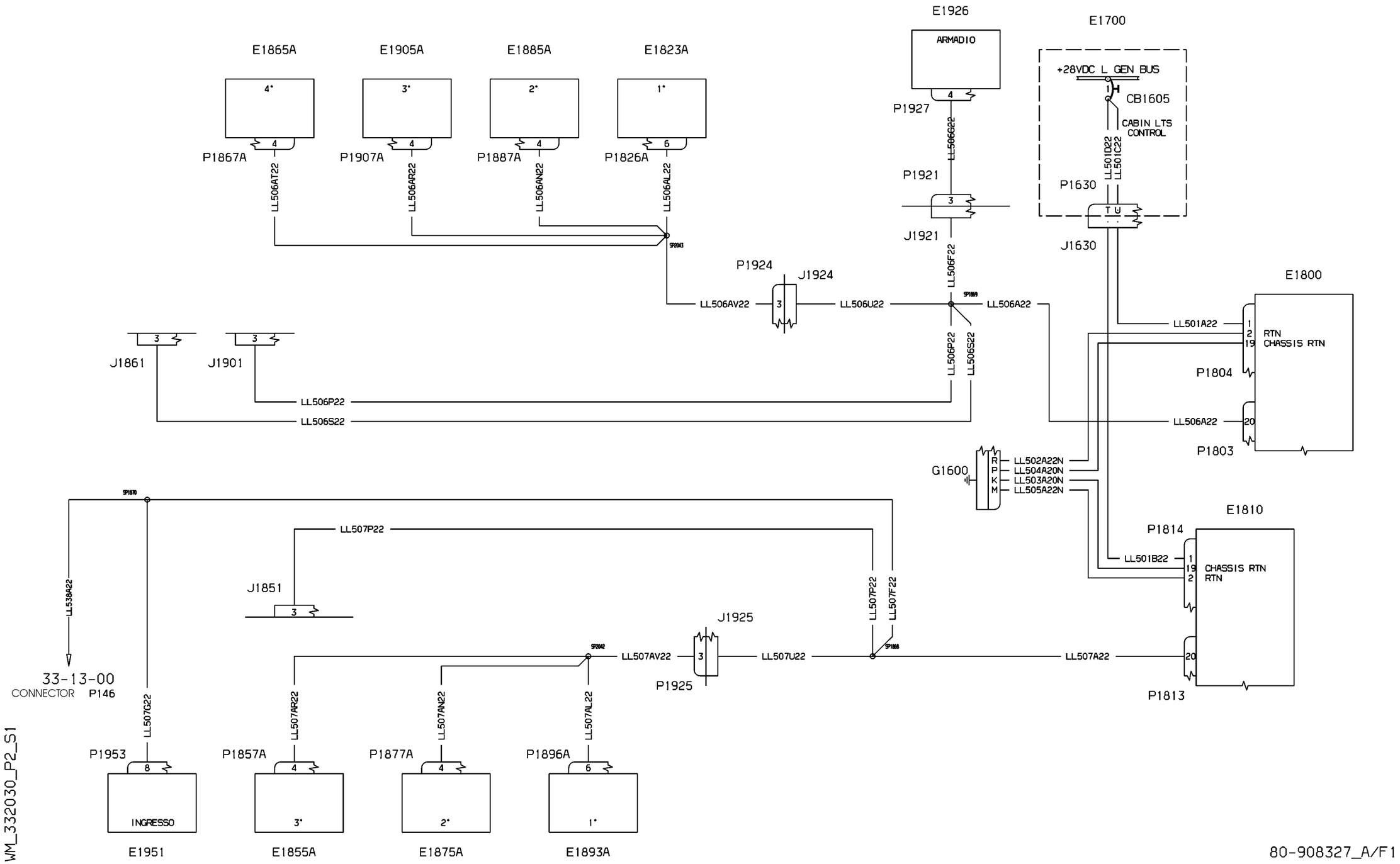
E1865A
E1905A
E1885A
E1823A
E1926
ARMADIO
E1700
+28VDC L GEN BUS
CB1605
CABIN LTS CONTROL
P1867A
P1907A
P1887A
P1826A
P1927
P1921
P1630
J1921
J1630
LL506AT22
LL506AR22
LL506AN22
LL506AL22
LL506G22
LL501D22
LL501C22
SP2043
P1924
J1924
LL506AV22
LL506U22
LL506F22
LL506A22
SP1869
E1800
LL501A22
RTN
CHASSIS RTN
P1804
P1803
J1861
J1901
LL506P22
LL506S22
G1600
LL502A22N
LL504A20N
LL503A20N
LL505A22N
SP1870
LL538A22
LL507P22
J1851
E1810
P1814
LL501B22
CHASSIS RTN
RTN
J1925
LL507P22
LL507F22
SP2042
LL507AV22
LL507U22
LL507A22
P1925
P1813
33-13-00
CONNECTOR P146
LL507G22
LL507AR22
LL507AN22
LL507AL22
P1953
P1857A
P1877A
P1896A
INGRESSO
3°
2°
1°
E1951
E1855A
E1875A
E1893A
WM_332030_P2_S1
80-908327_A/F1

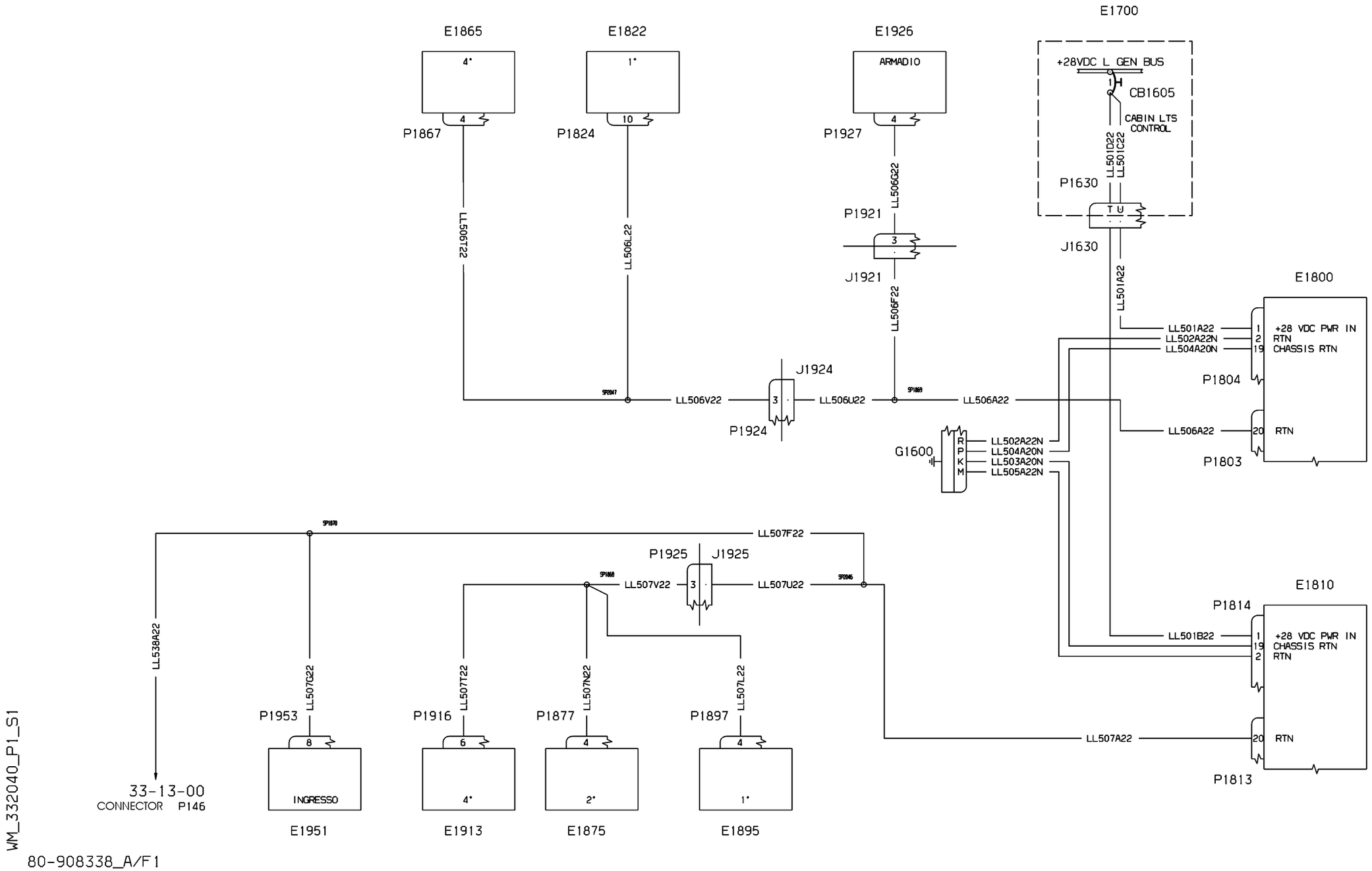


| EFFECTIVITY: | PASSENGER COMPARTMENT<br>Circuit CTRL pwr & return (OPT 20) |
|---|---|

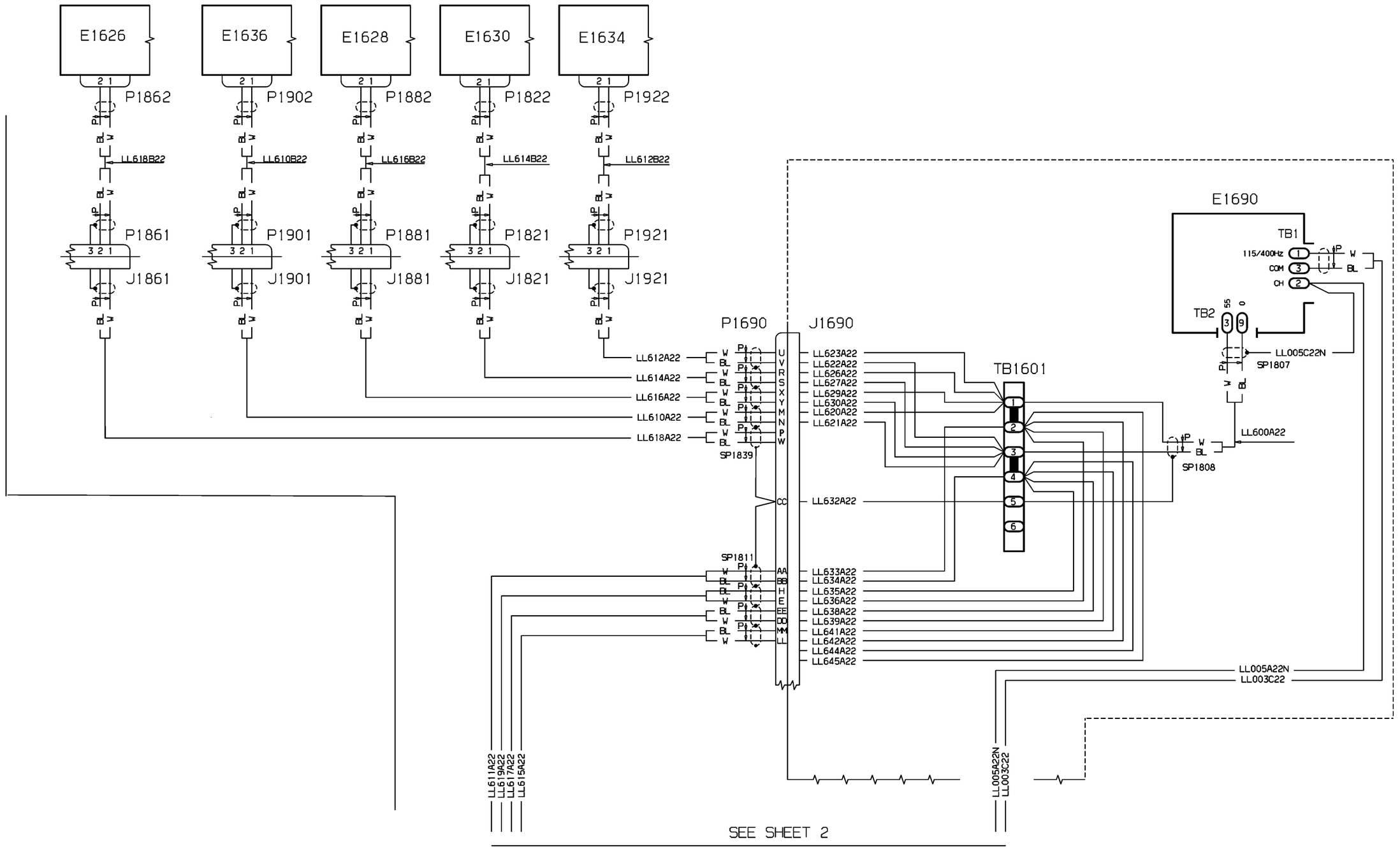


WM_332110_P1_S1

80-908066_A/F1

| EFFECTIVITY: 1034-1034 | PASSENGER COMPARTMENT<br>Switch Panel Lights (Opt.1 ) |
|---|---|

**33-21-10**

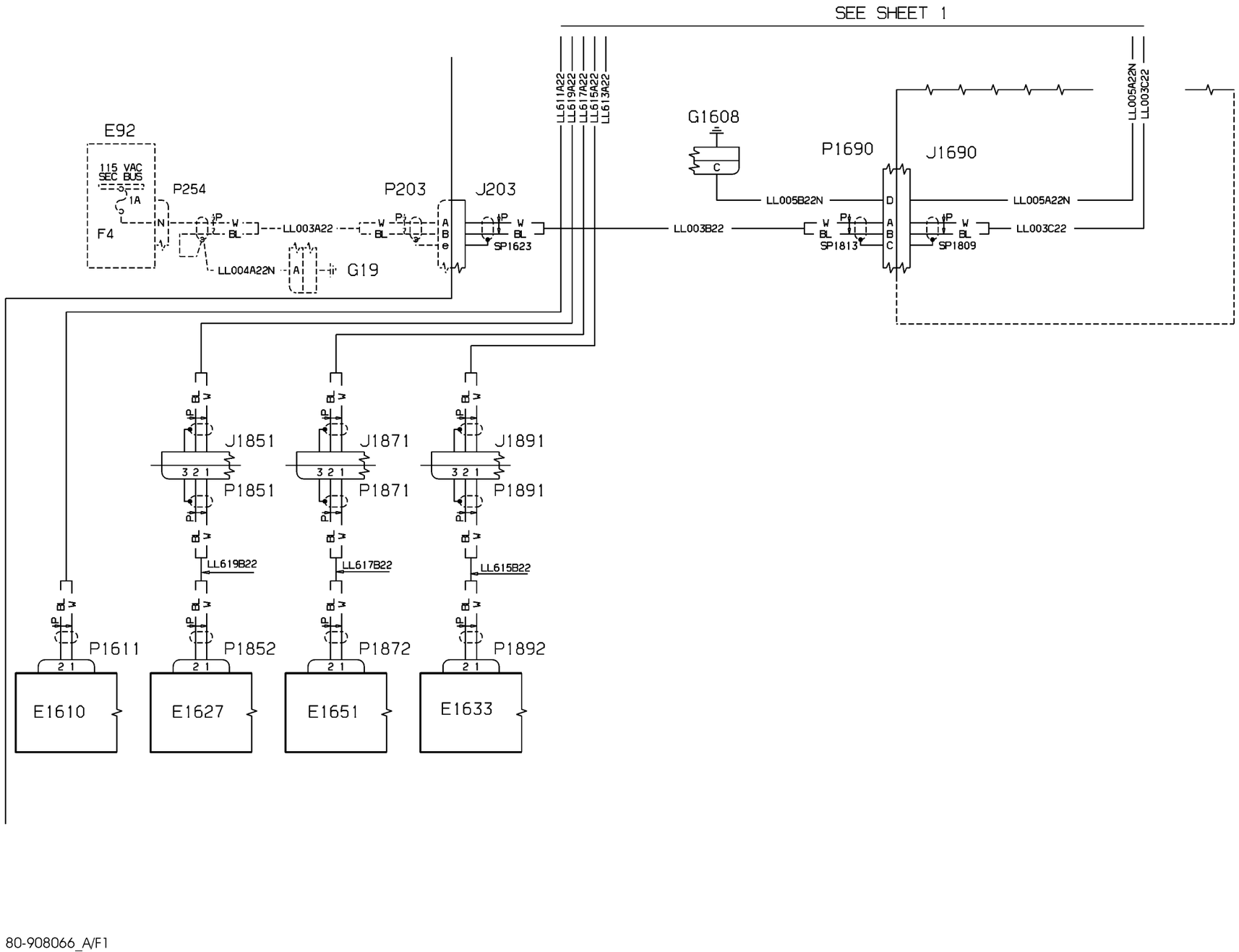
SEE SHEET 1
E92
115 VAC SEC BUS
1A
F4
P254
P203
J203
LL003A22
LL004A22N
G19
SP1623
LL003B22
G1608
C
LL005B22N
P1690
J1690
LL005A22N
LL003C22
SP1813
SP1809
LL611A22
LL619A22
LL617A22
LL615A22
LL613A22
J1851
J1871
J1891
P1851
P1871
P1891
LL619B22
LL617B22
LL615B22
P1611
P1852
P1872
P1892
E1610
E1627
E1651
E1633
WM_332110_P1_S2
80-908066_A/F1

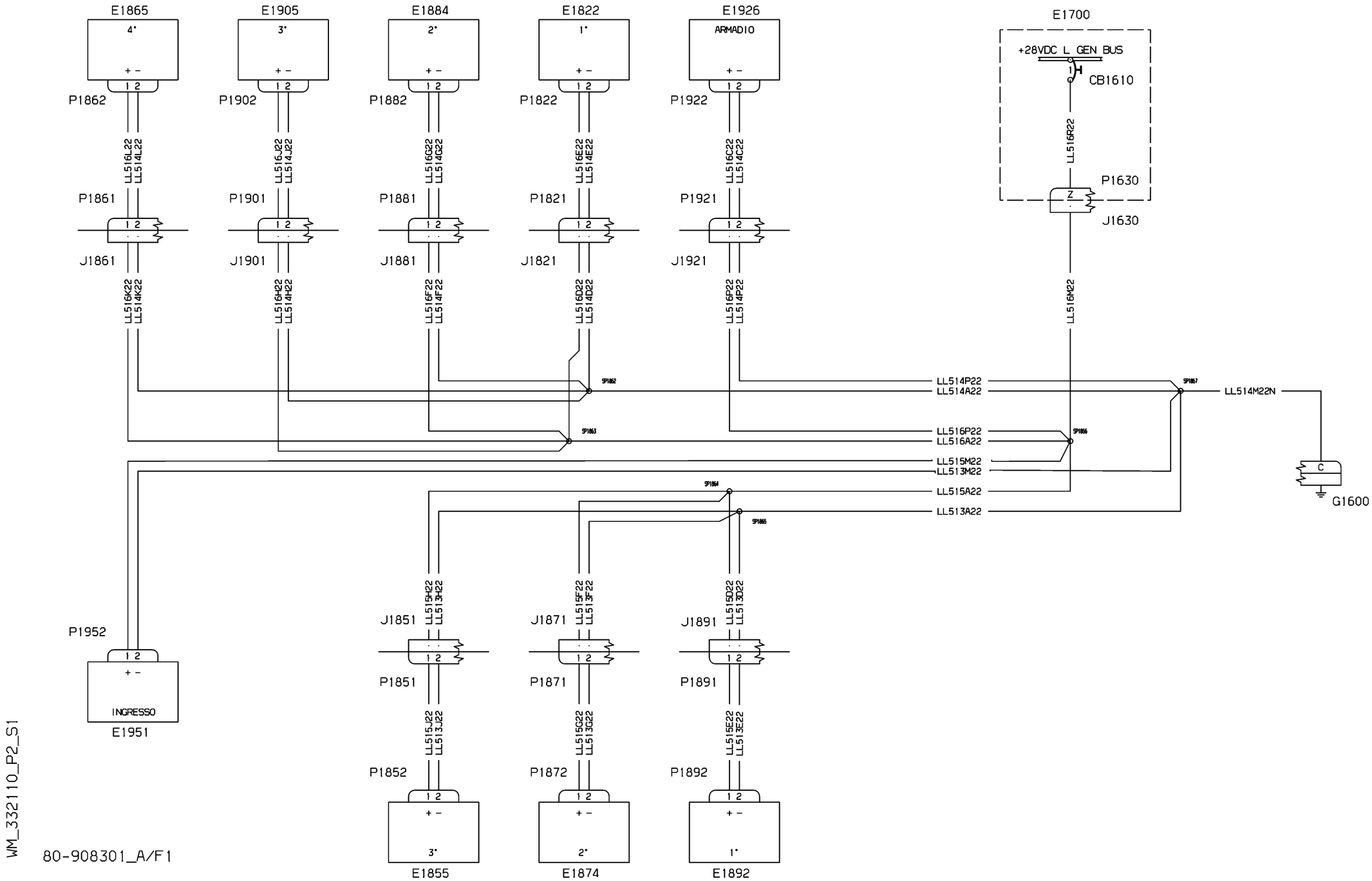


WM_332110_P2_S1

80-908301_A/F1

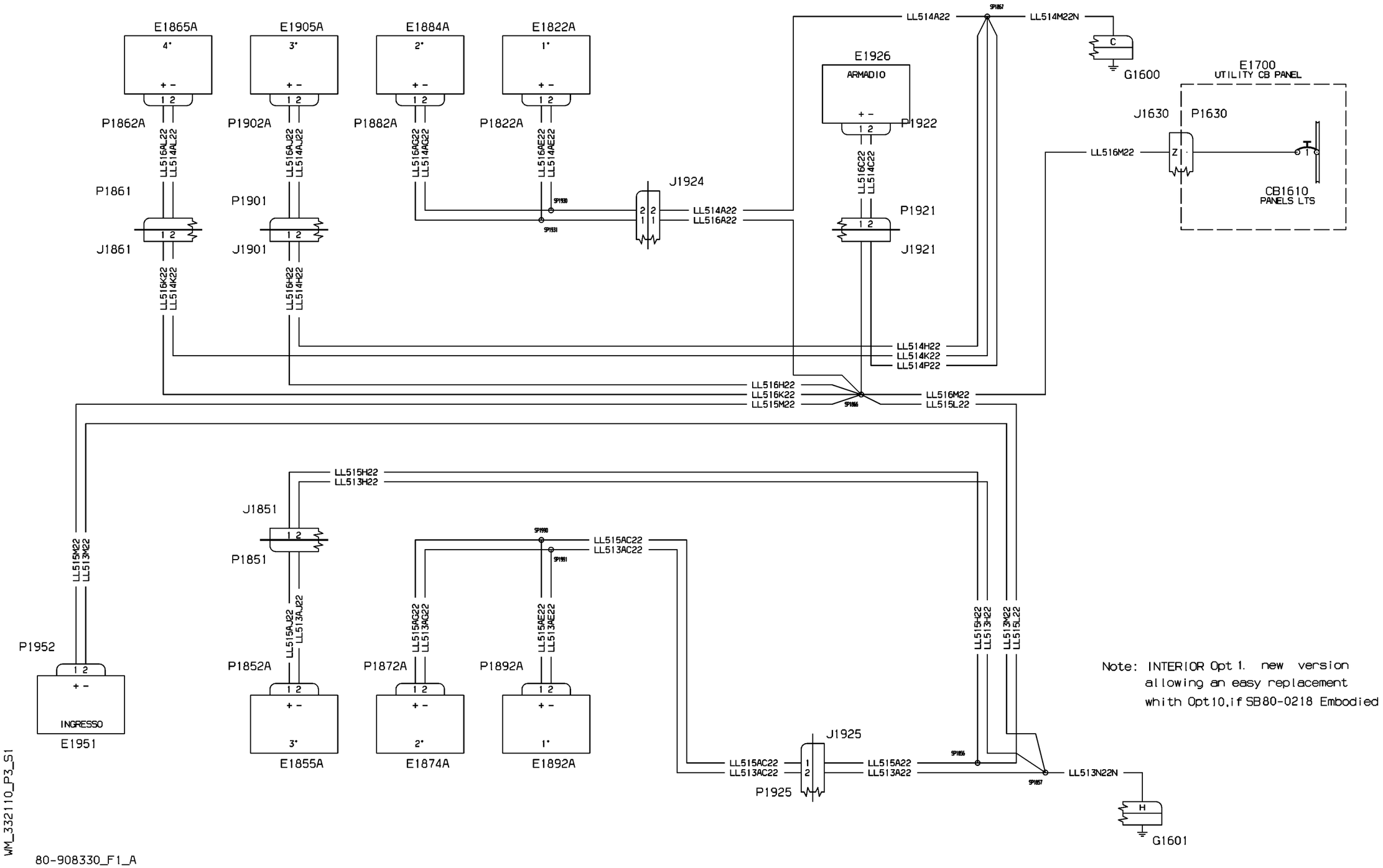
E1865A
E1905A
E1884A
E1822A
P1862A
P1902A
P1882A
P1822A
P1861
P1901
J1861
J1901
J1924
P1921
J1921
E1926
ARMADIO
P1922
G1600
E1700
UTILITY CB PANEL
J1630
P1630
CB1610
PANELS LTS
LL514A22
LL514M22N
LL516M22
LL514H22
LL514K22
LL514P22
LL516H22
LL516K22
LL515M22
LL515L22
LL516A22
LL514C22
LL516C22
J1851
P1851
P1852A
P1872A
P1892A
P1952
E1951
E1855A
E1874A
E1892A
J1925
P1925
LL515H22
LL513H22
LL515AC22
LL513AC22
LL513M22
LL513N22N
G1601
Note: INTERIOR Opt 1. new version
allowing an easy replacement
whith Opt10,if SB80-0218 Embodied
WM_332110_P3_S1
80-908330_F1_A

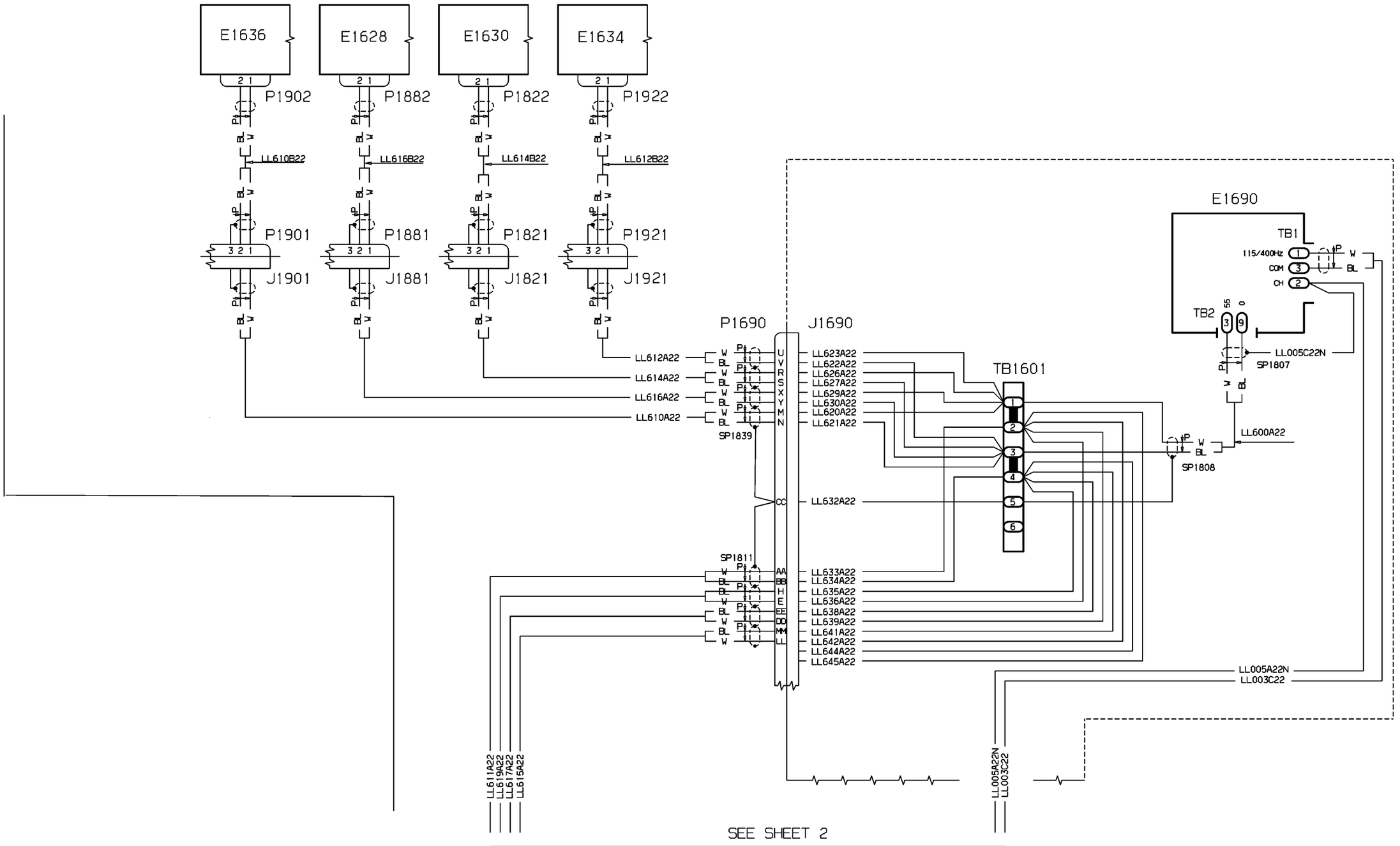


WM_332120_P1_S1

80-908079_A/F1

| EFFECTIVITY: | PASSENGER COMPARTMENT |
|---|---|
| 1035,1045 | Switch Panel Lights (Opt.2) |

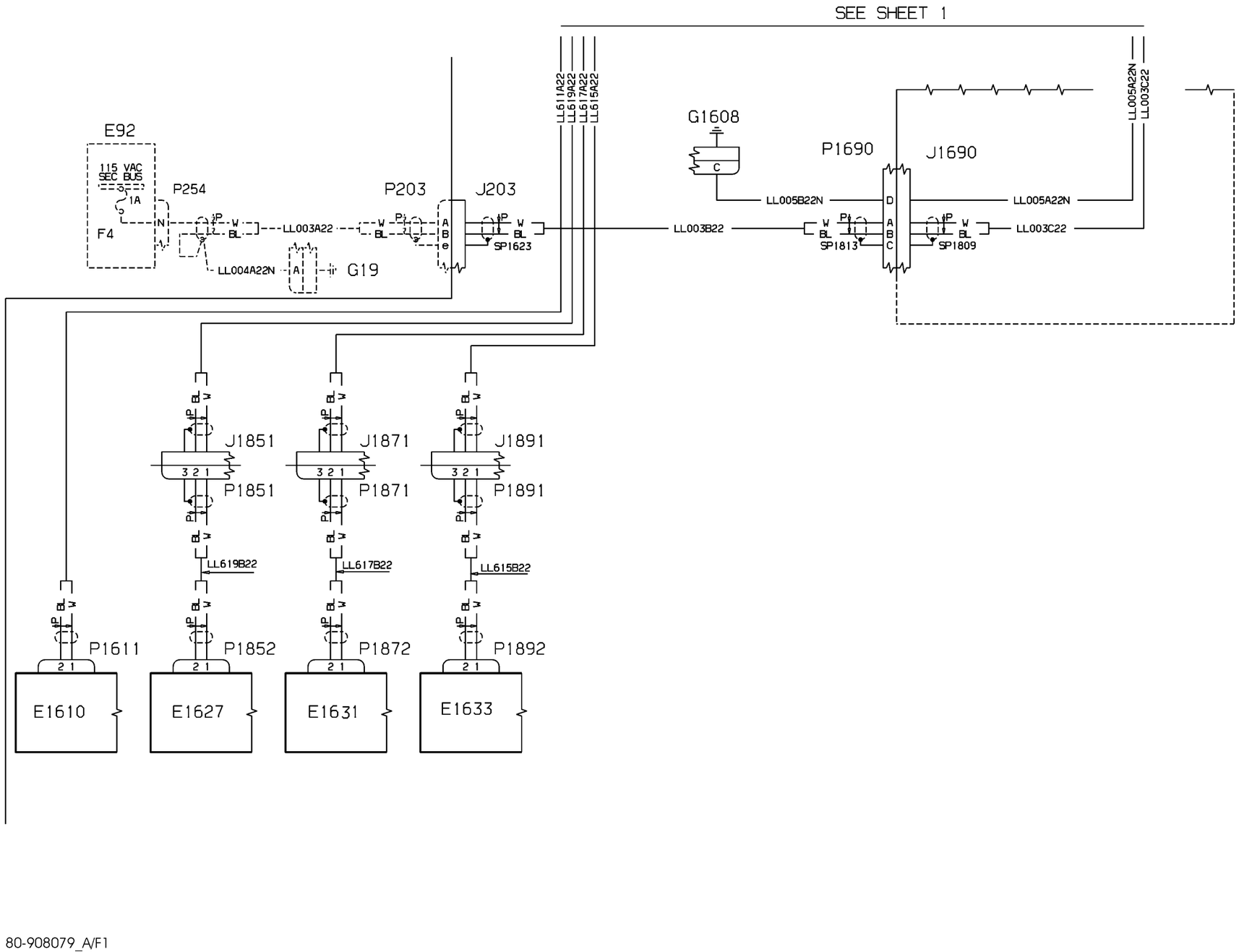
SEE SHEET 1
E92
115 VAC SEC BUS
1A
F4
P254
P203
J203
LL003A22
LL004A22N
G19
LL003B22
G1608
C
LL005B22N
P1690
J1690
LL005A22N
LL003C22
SP1623
SP1813
SP1809
LL611A22
LL619A22
LL617A22
LL615A22
J1851
J1871
J1891
P1851
P1871
P1891
LL619B22
LL617B22
LL615B22
P1611
P1852
P1872
P1892
E1610
E1627
E1631
E1633
WM_332120_P1_S2
80-908079_A/F1

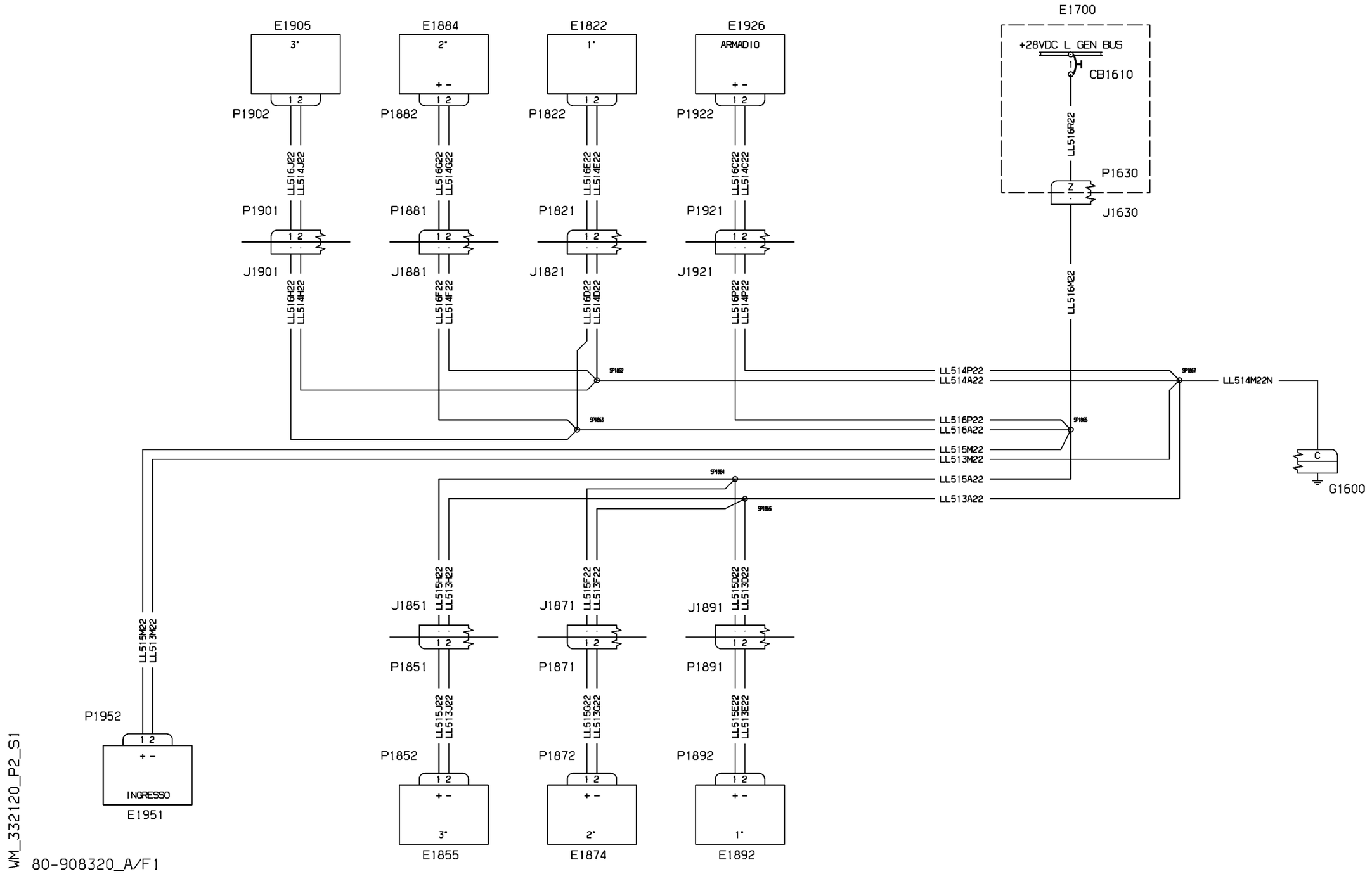


| EFFECTIVITY: | PASSENGER COMPARTMENT<br>Switch Panel Lights (Opt.2) |
|---|---|

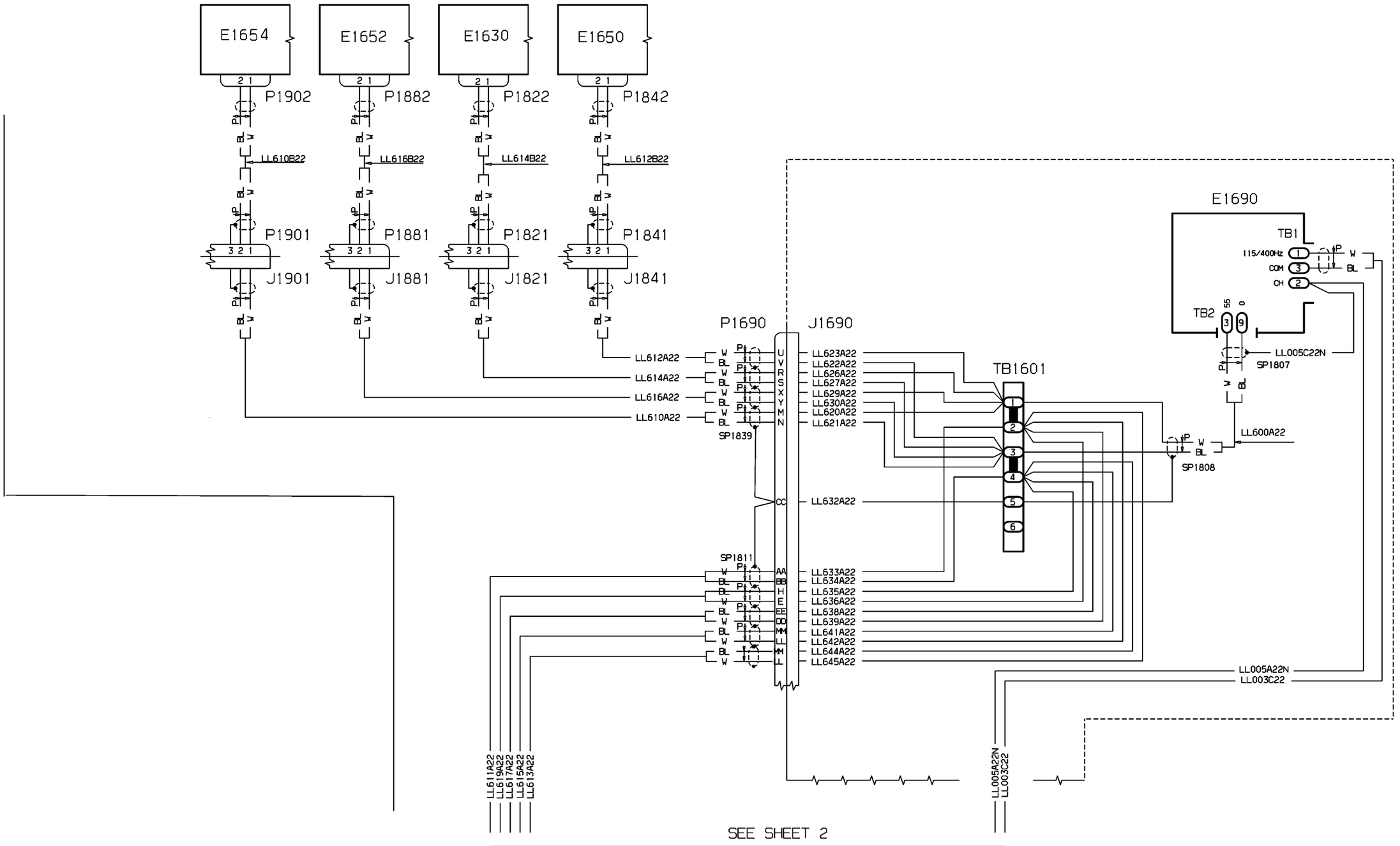


WM_332140_P1_S1

80-908034_A/F1

| EFFECTIVITY: | PASSENGER COMPARTMENT<br>Switch Panel Lights (Opt.8) |
|---|---|

**33-21-40**

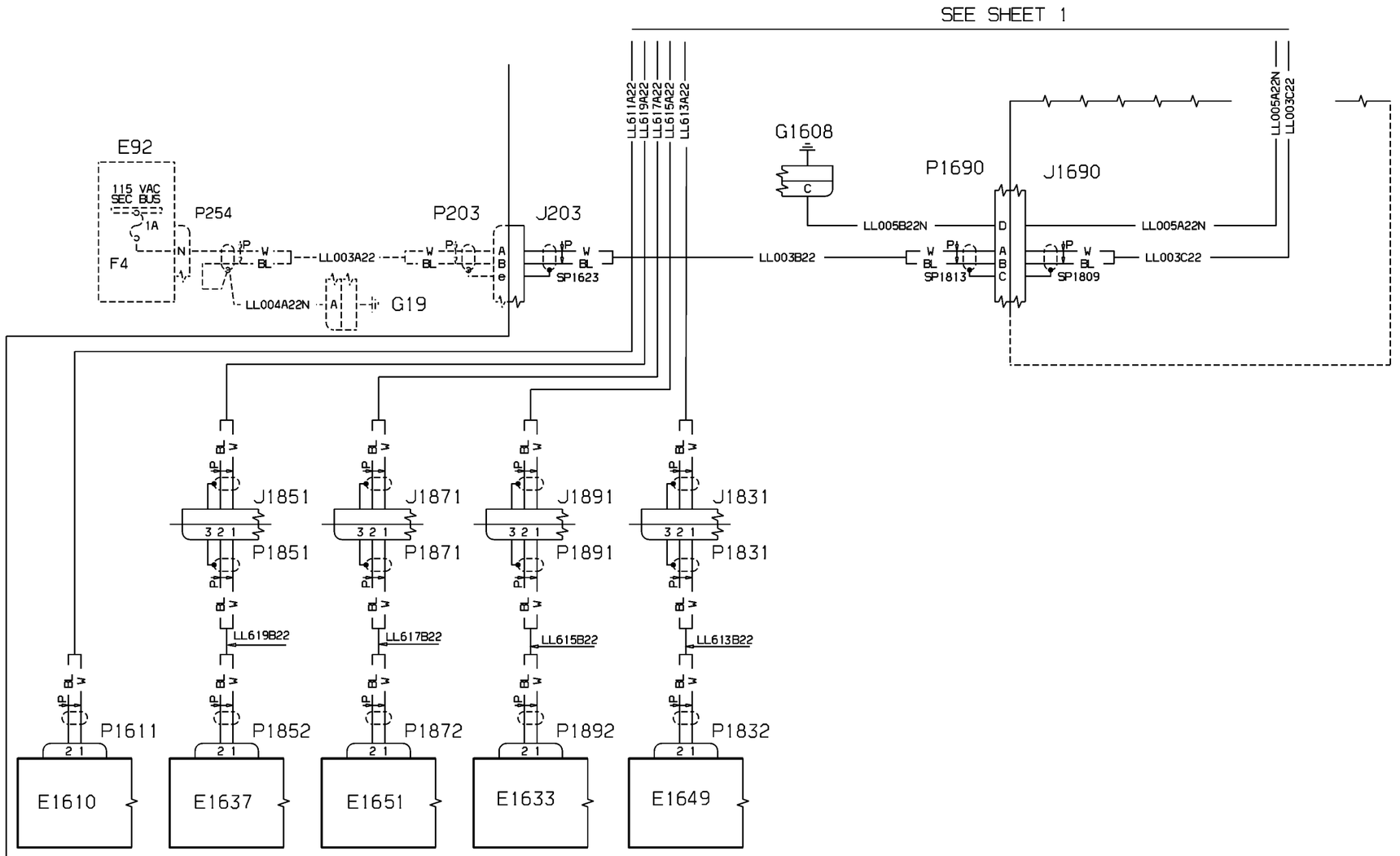


80-908034_A/F1

| EFFECTIVITY: | PASSENGER COMPARTMENT<br>Switch Panel Lights (Opt.8) |
|---|---|

**33-21-40**

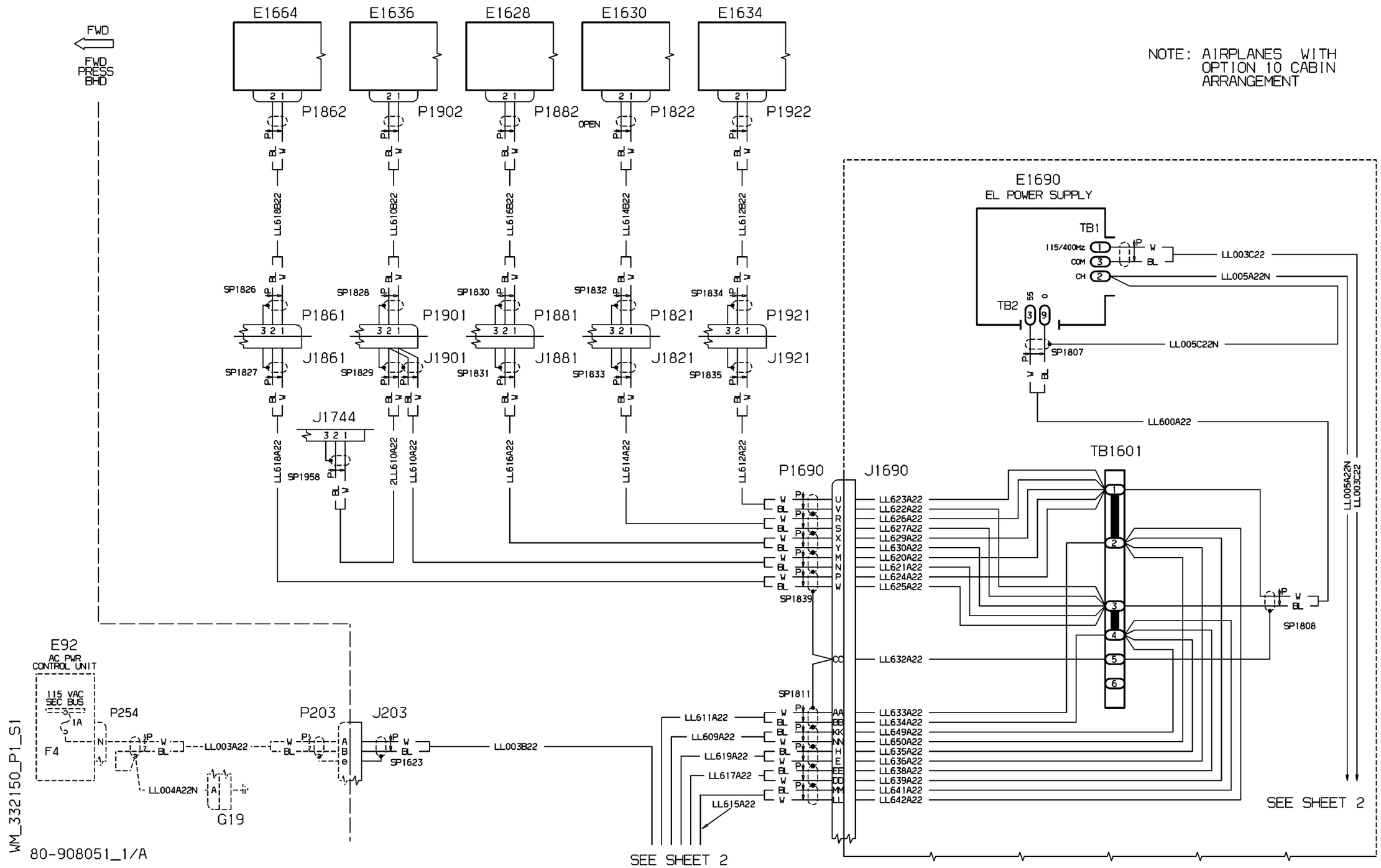


NOTE: AIRPLANES WITH OPTION 10 CABIN ARRANGEMENT

| EFFECTIVITY: | PASSENGER COMPARTMENT |
|---|---|
| 1023-1025,1028-1030 | Switch Panel Lights (Opt.10 AMI ) |

**33-21-50**

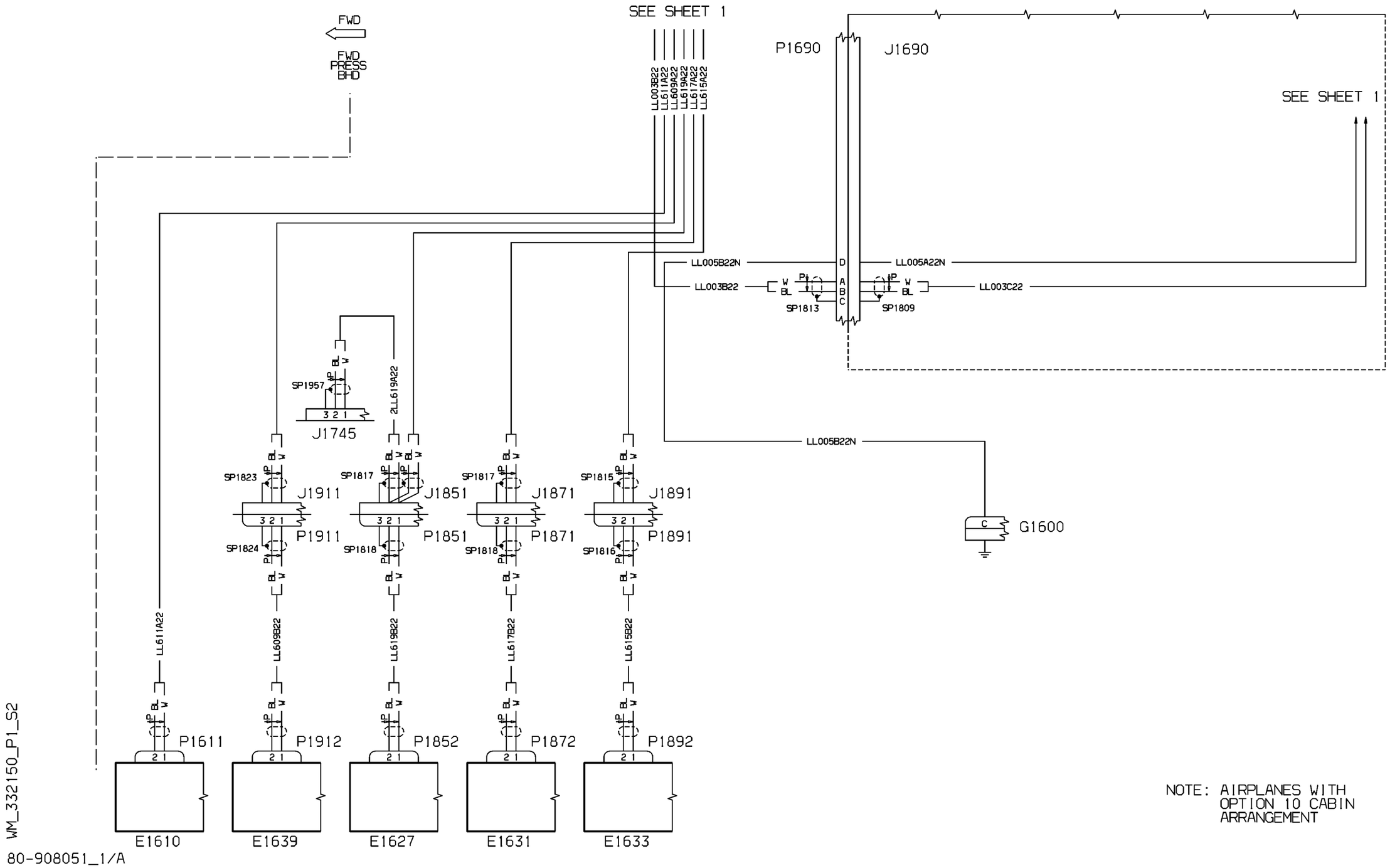
SEE SHEET 1
FWD
FWD
PRESS
BHD
LL003B22
LL611A22
LL609A22
LL619A22
LL617A22
LL615A22
P1690
J1690
SEE SHEET 1
LL005B22N
LL005A22N
LL003B22
LL003C22
SP1813
SP1809
SP1957
2LL619A22
J1745
LL005B22N
SP1823
SP1817
SP1817
SP1815
J1911
J1851
J1871
J1891
P1911
P1851
P1871
P1891
SP1824
SP1818
SP1818
SP1816
G1600
LL611A22
LL609B22
LL619B22
LL617B22
LL615B22
P1611
P1912
P1852
P1872
P1892
E1610
E1639
E1627
E1631
E1633
WM_332150_P1_S2
80-908051_1/A
NOTE: AIRPLANES WITH OPTION 10 CABIN ARRANGEMENT

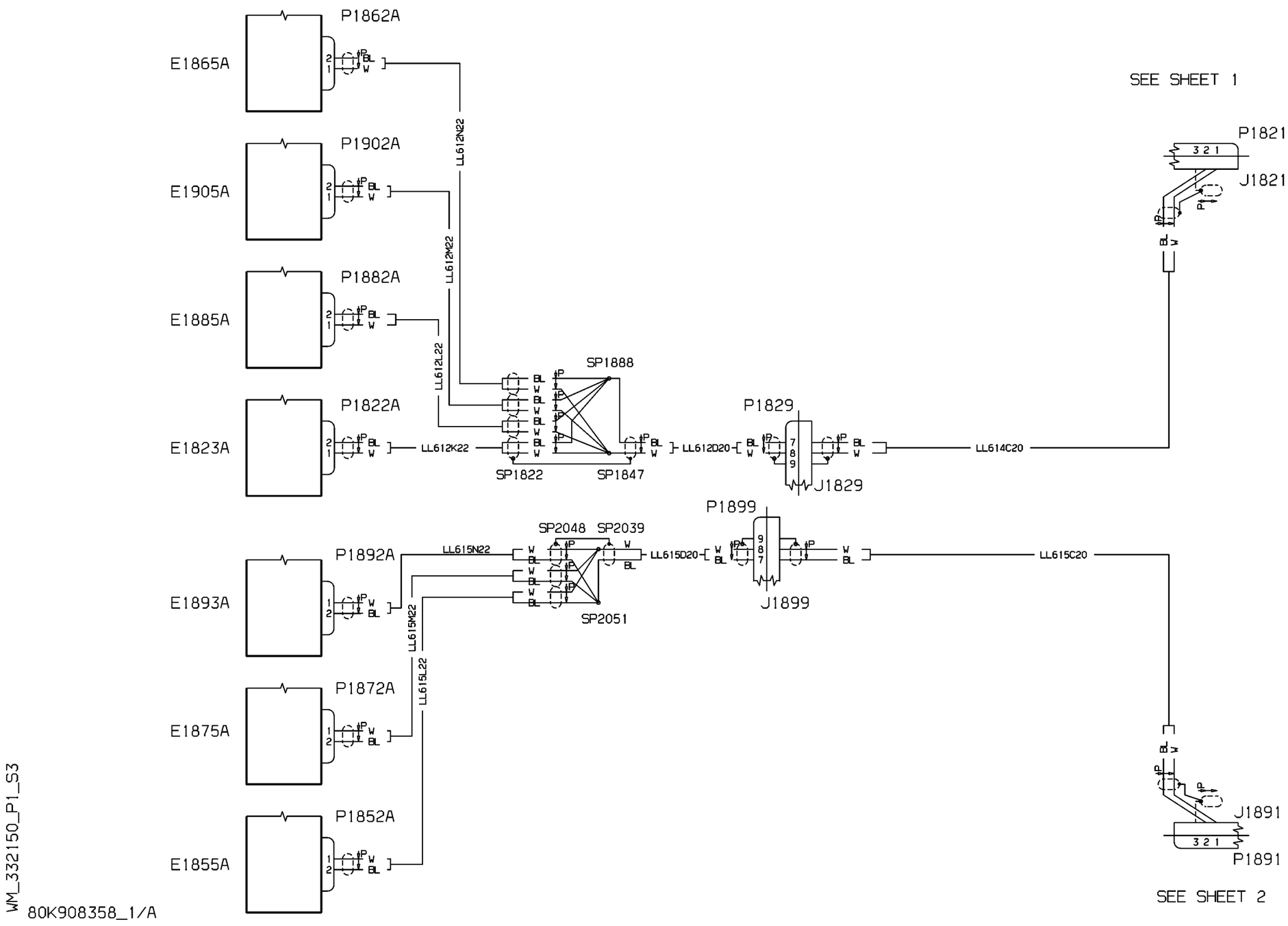


| EFFECTIVITY: | PASSENGER COMPARTMENT |
|---|---|
| 1023-1025,1028-1030 | Switch Panel Lights Upgrade (Opt. 10 AMI) |

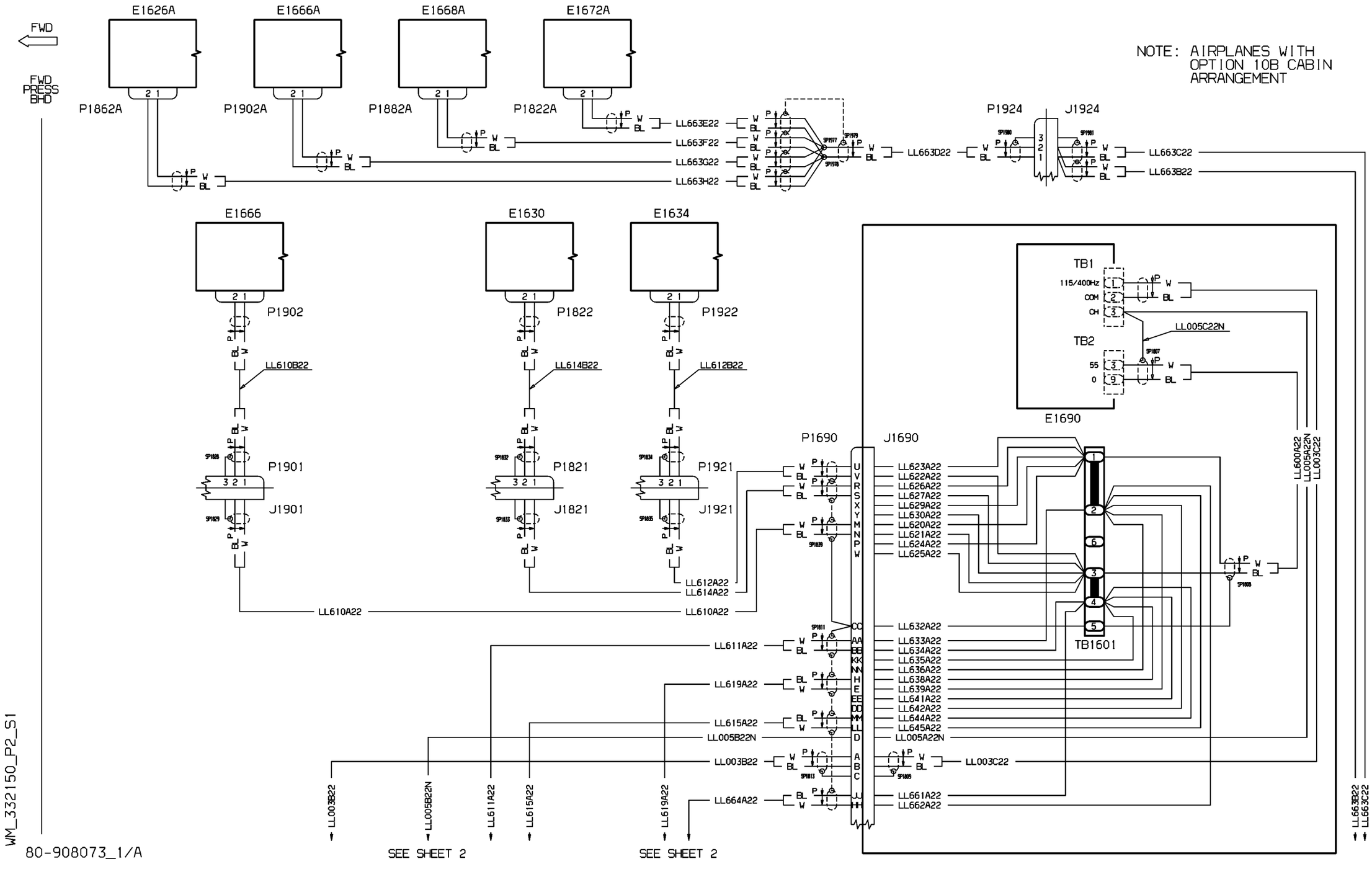


| EFFECTIVITY: 1026,1027,1031 | PASSENGER COMPARTMENT<br>Switch Panel Lights (Opt.10 E.I. ) |
|---|---|

**33-21-50**

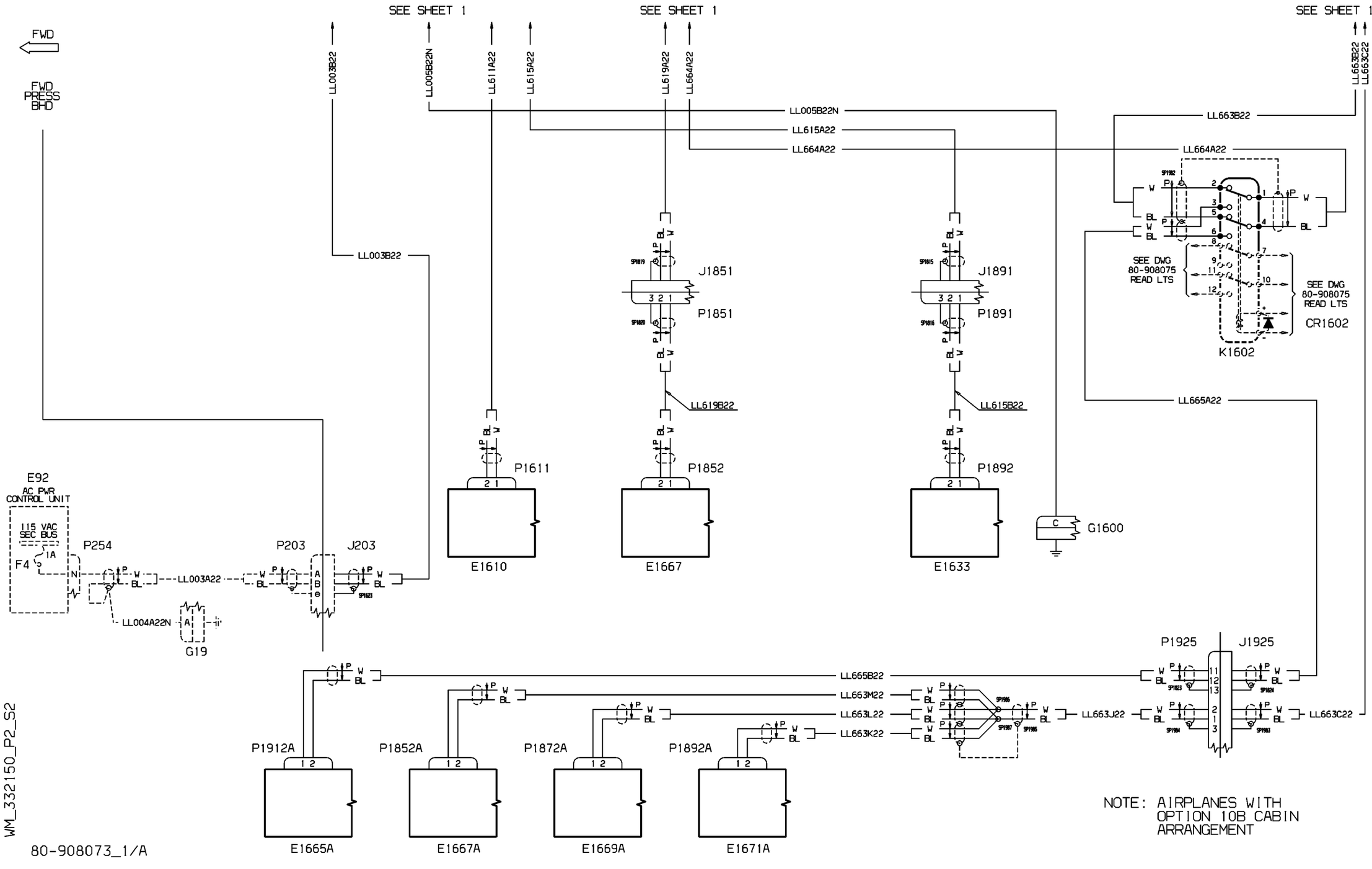
SEE SHEET 1
SEE SHEET 1
SEE SHEET 1
FWD
FWD PRESS BHD
LL003B22
LL005B22N
LL611A22
LL615A22
LL619A22
LL664A22
LL663B22
LL663C22
LL003B22
LL005B22N
LL615A22
LL664A22
LL663B22
LL665A22
J1851
P1851
J1891
P1891
LL619B22
LL615B22
P1611
P1852
P1892
E1610
E1667
E1633
G1600
SP1602
K1602
SEE DWG 80-908075 READ LTS
SEE DWG 80-908075 READ LTS
CR1602
E92
AC PWR CONTROL UNIT
115 VAC SEC BUS
1A
F4
P254
P203
J203
LL003A22
LL004A22N
G19
P1925
J1925
LL665B22
LL663M22
LL663L22
LL663K22
LL663J22
LL663C22
P1912A
P1852A
P1872A
P1892A
E1665A
E1667A
E1669A
E1671A
WM_332150_P2_S2
80-908073_1/A
NOTE: AIRPLANES WITH OPTION 10B CABIN ARRANGEMENT

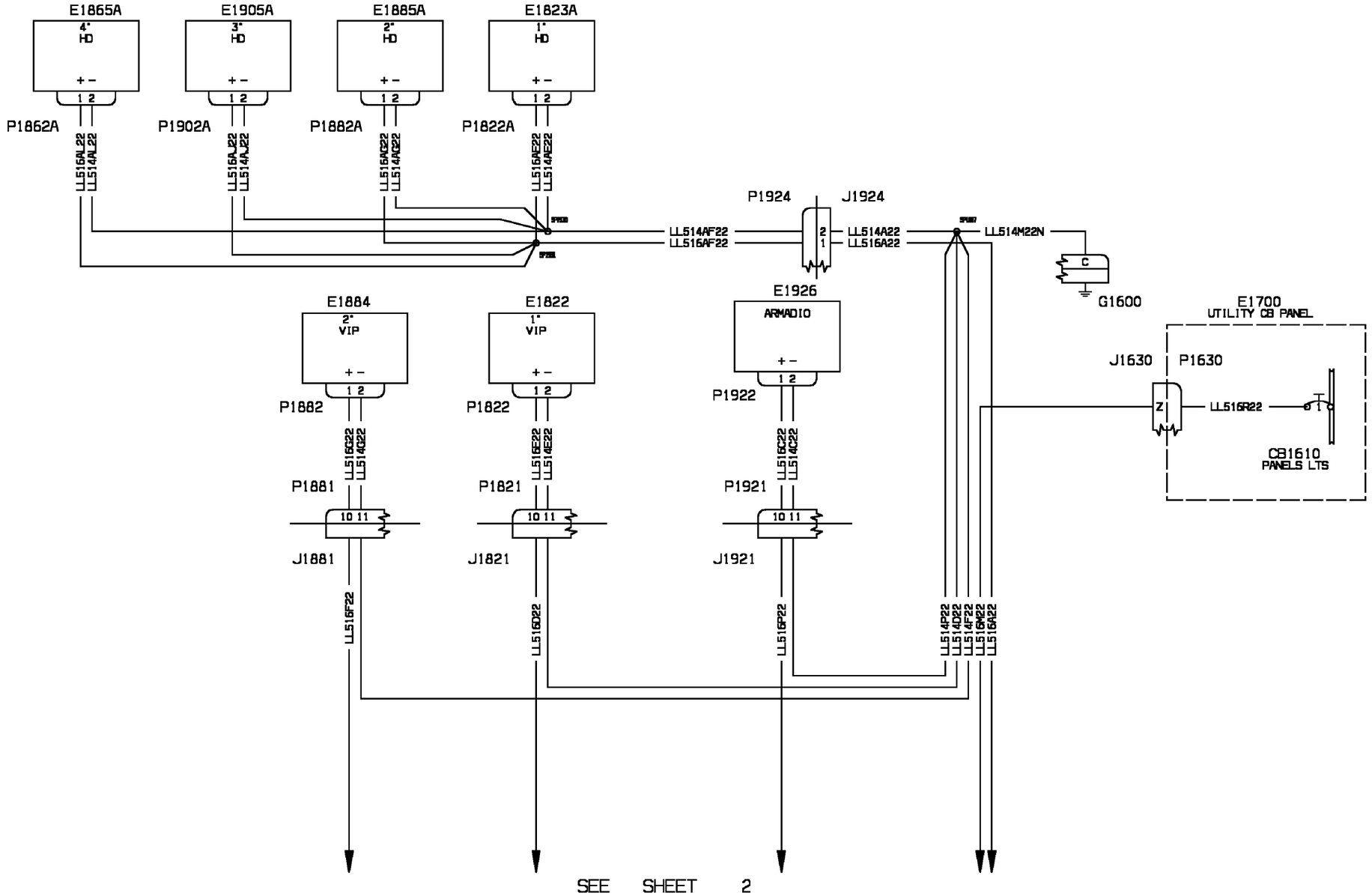


WM_332150_P3_S1

80-908313_A/F1

| EFFECTIVITY: | PASSENGER COMPARTMENT |
|---|---|
| 1041,1047,1053,1058, 1071,1075,1078,1082, 1087,1094,1096 | Switch Panel Lights (Opt.10 SMA ) |

**33-21-50**

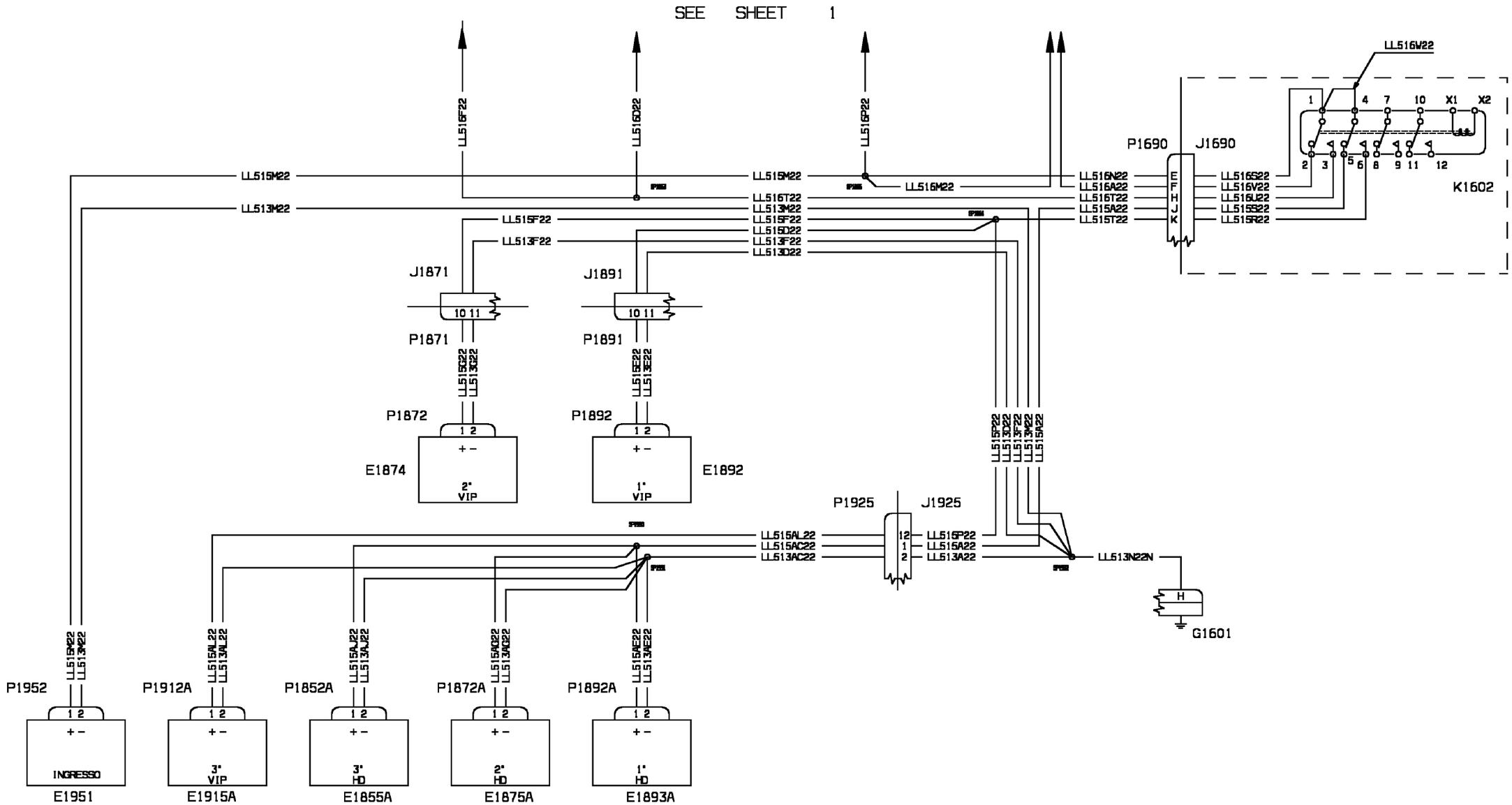


WM_332150_P3_S2

80-908313_A/F1

| | |
|---|---|
| EFFECTIVITY:<br>1041,1047,1053,1058,<br>1071,1075,1078,1082,<br>1087,1094,1096 | PASSENGER COMPARTMENT<br>Switch Panel Lights (Opt.10 SMA ) |

**33-21-50**

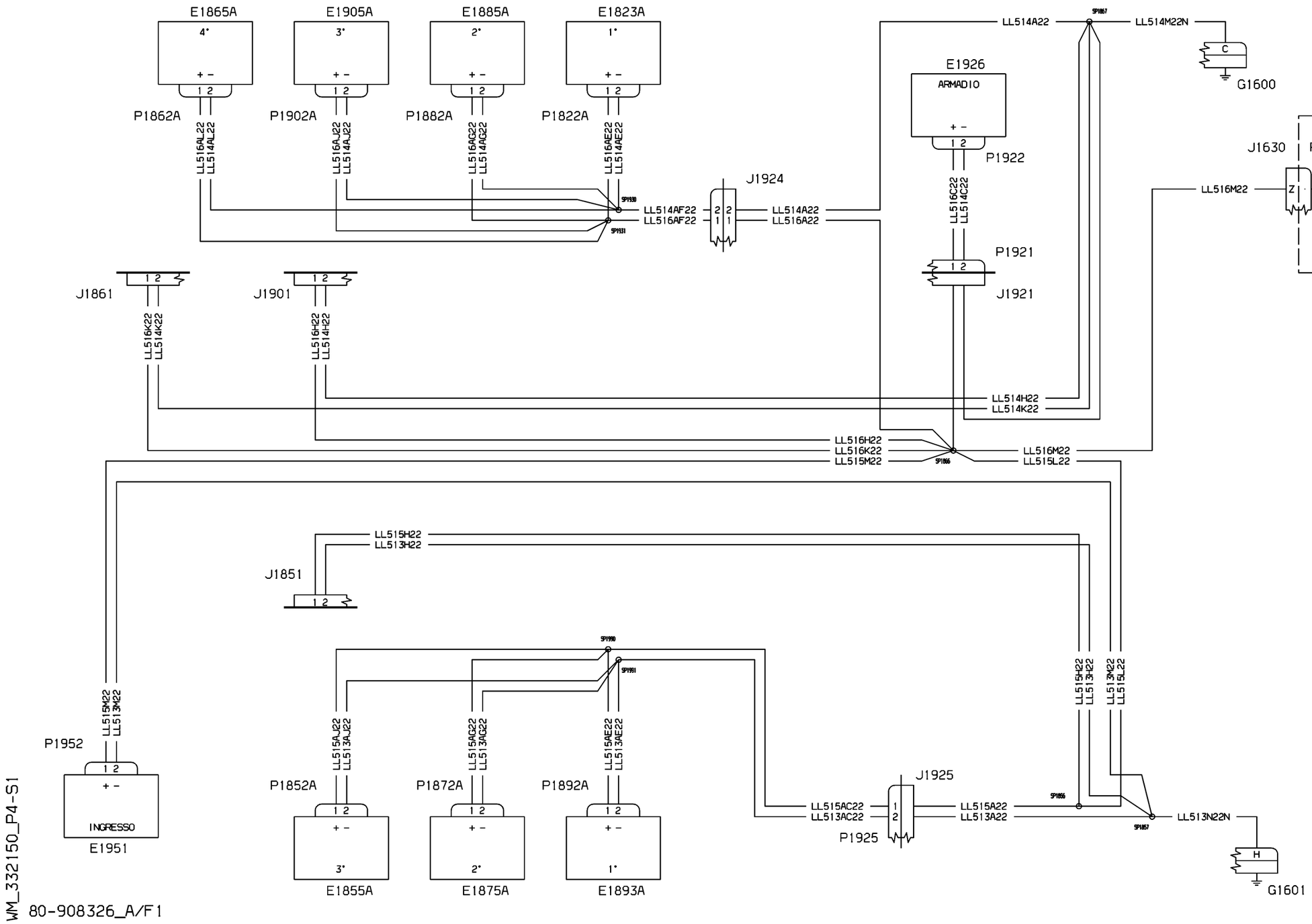


WM_332150_P4-S1
80-908326_A/F1

| EFFECTIVITY: | PASSENGER COMPARTMENT |
|---|---|
| 1076,1085,1090 | Switch Panel Lights (Opt.10 M.M. ) |

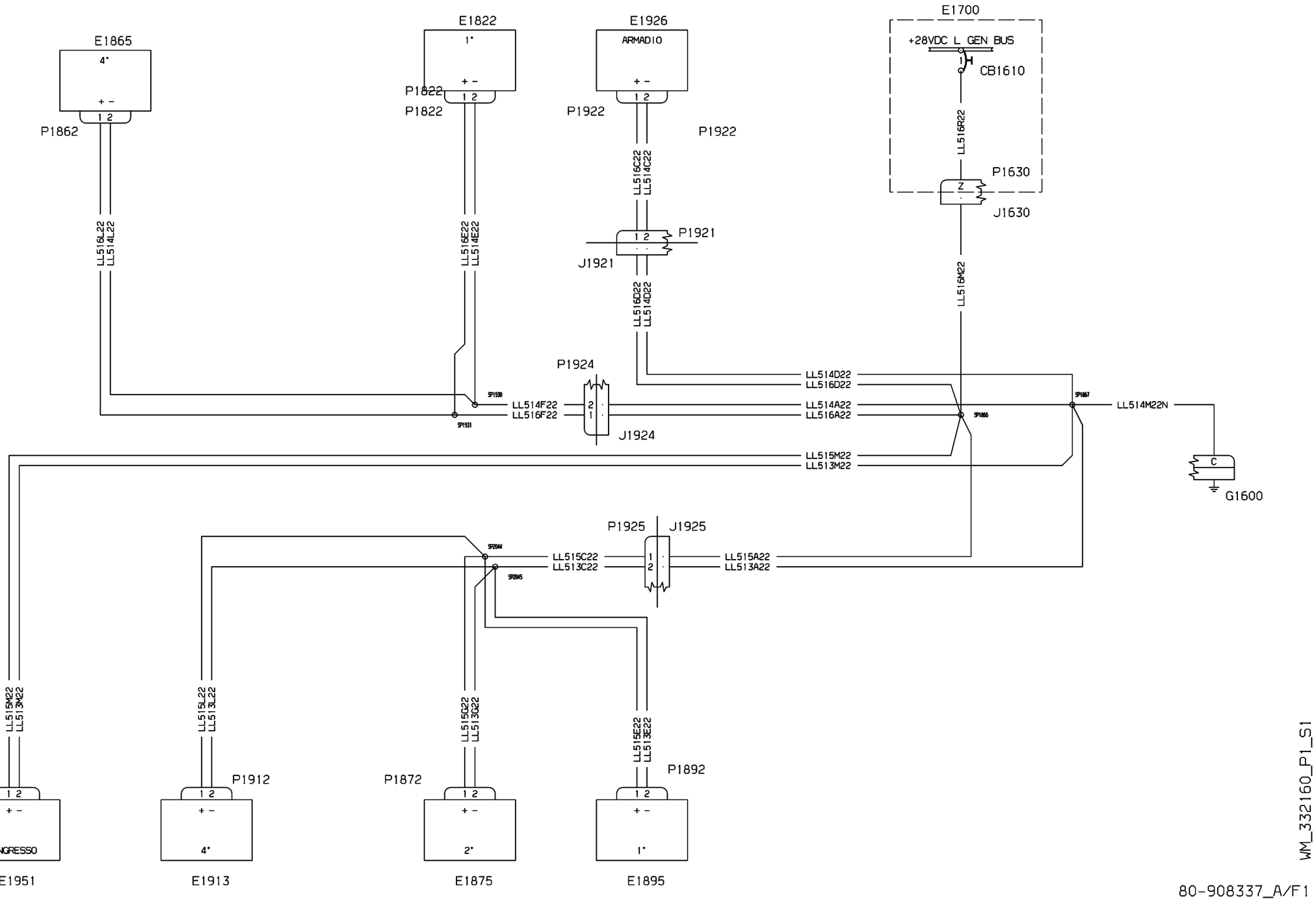


| EFFECTIVITY: | PASSENGER COMPARTMENT<br>Switch Panel Lights (Opt.20) |
|---|---|

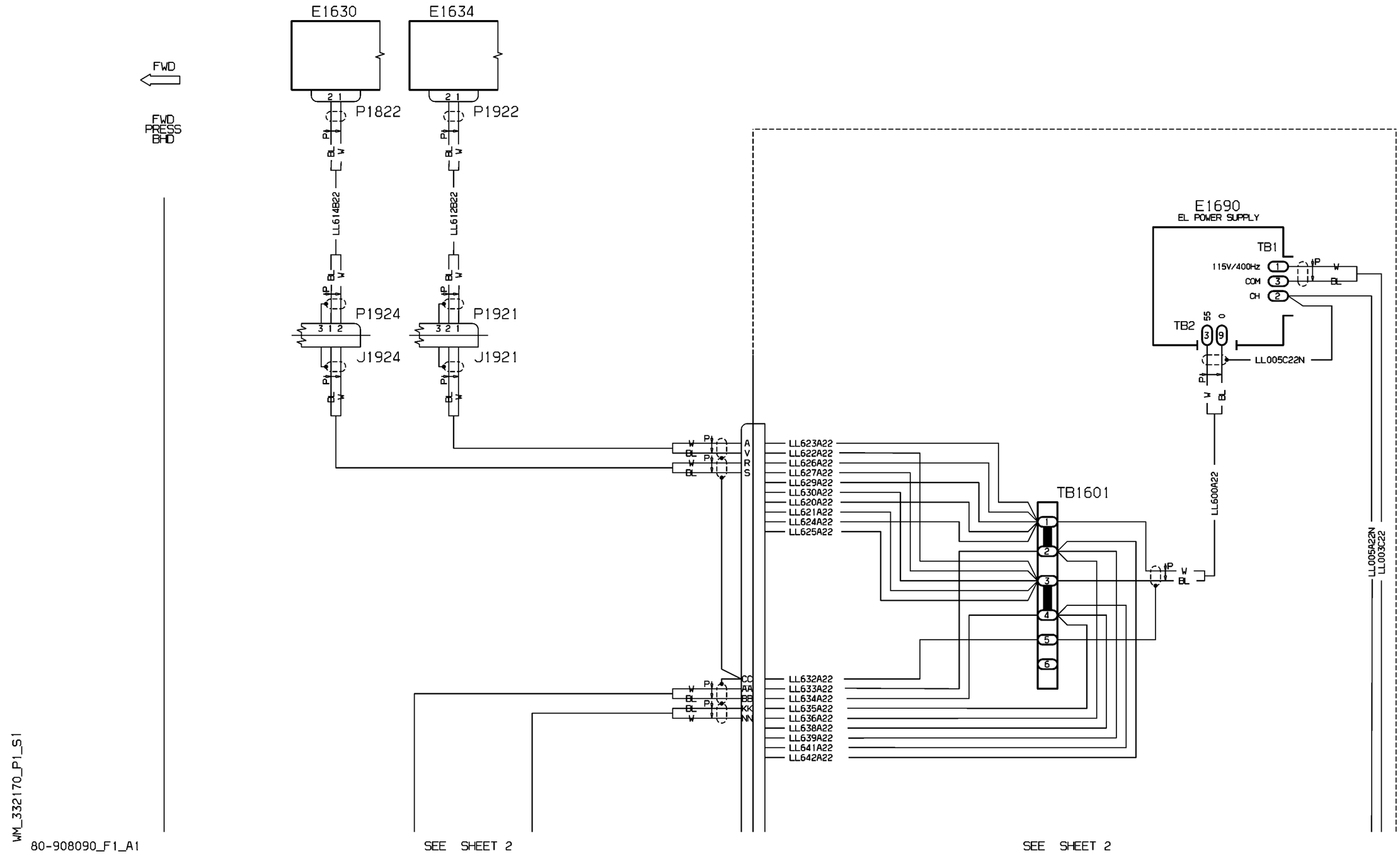


| EFFECTIVITY: | PASSENGER COMPARTMENT<br>Switch Panel Lights (Opt.17) |
|---|---|

**33-21-70**

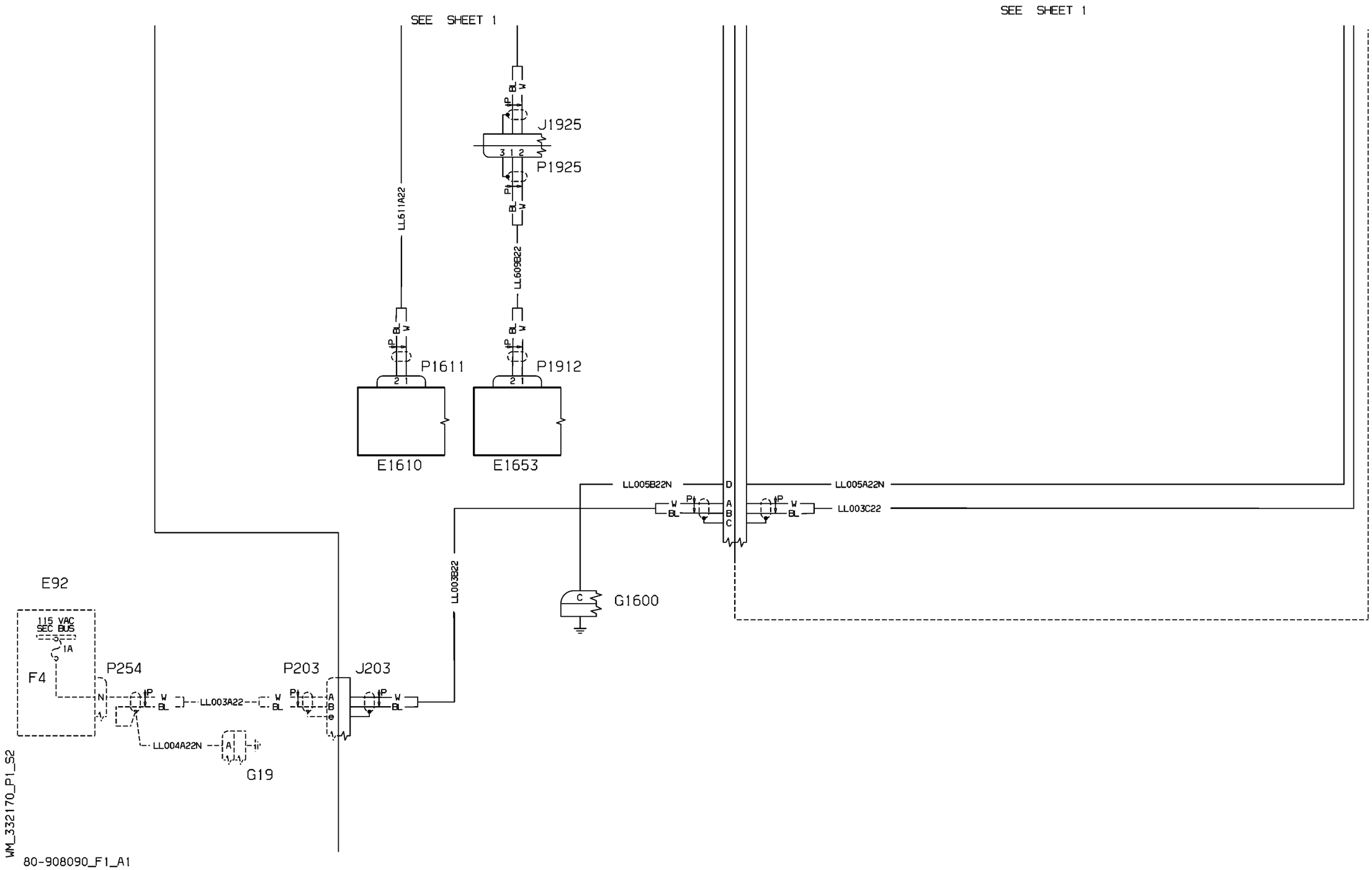
SEE SHEET 1
SEE SHEET 1
J1925
P1925
LL611A22
LL609B22
P1611
P1912
E1610
E1653
LL005B22N
LL005A22N
LL003C22
G1600
LL003B22
E92
115 VAC
SEC BUS
3
1A
F4
P254
P203
J203
LL003A22
LL004A22N
G19
WM_332170_P1_S2
80-908090_F1_A1

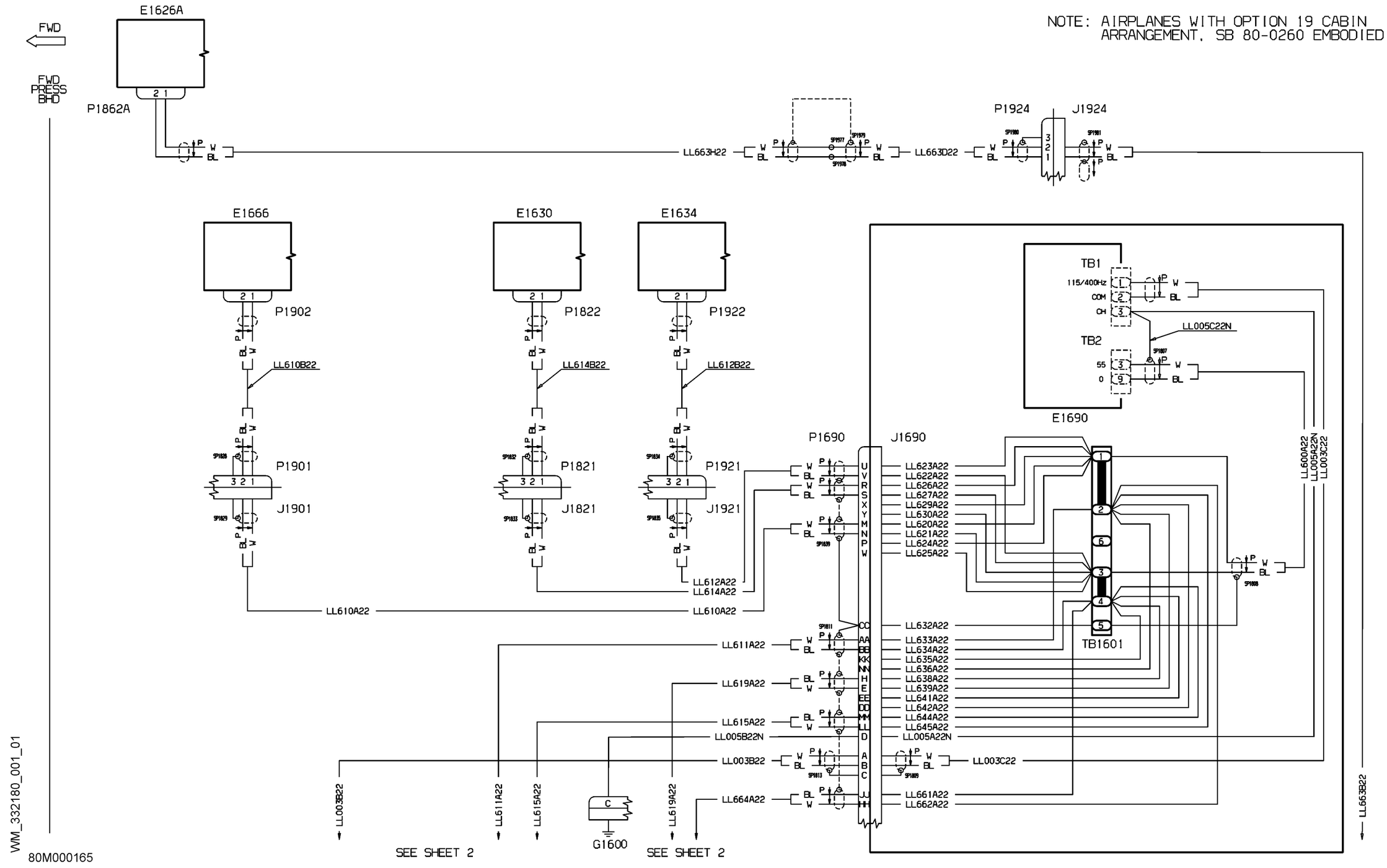


| EFFECTIVITY: | PASSENGER COMPARTMENT |
|---|---|
| 1032-1032 | Switch Panel Lights |

**33-21-80**

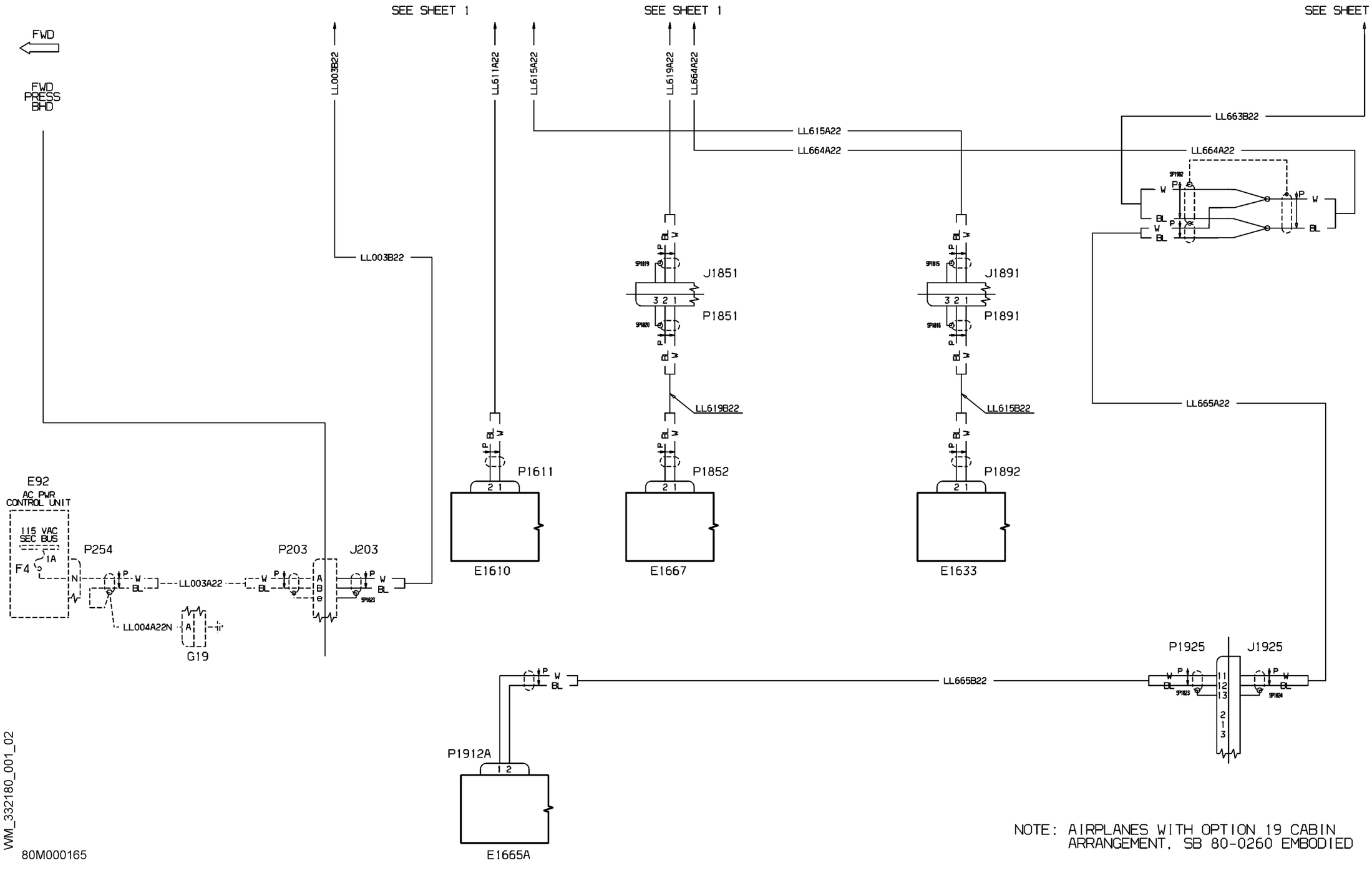


VM_332180_001_02

80M000165

| EFFECTIVITY: | PASSENGER COMPARTMENT |
|---|---|
| 1032-1032 | Switch Panel Lights |

**33-21-80**

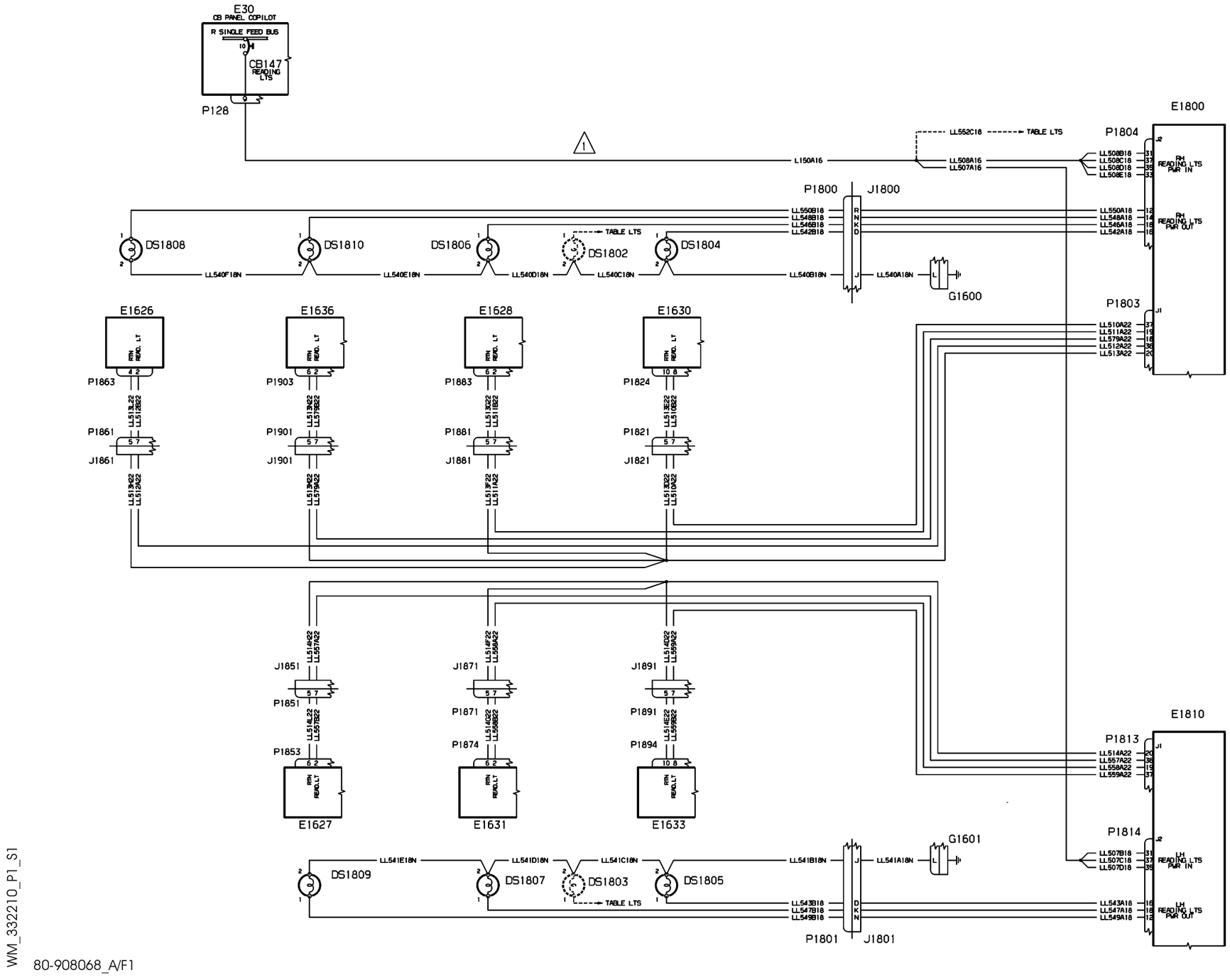


WM_332210_P1_S1

80-908068_A/F1

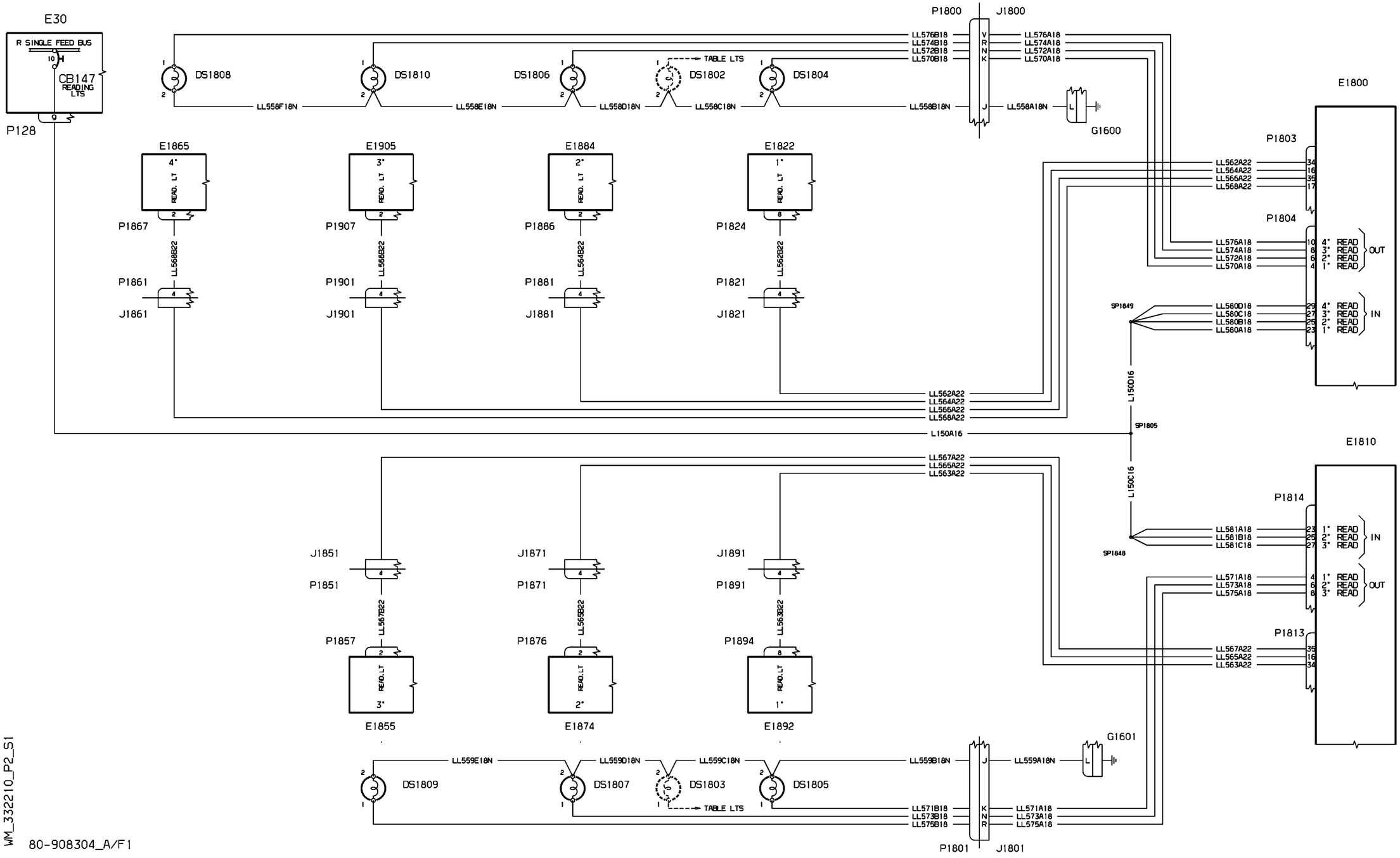


WM_332210_P2_S1

80-908304_A/F1

| EFFECTIVITY: | PASSENGER COMPARTMENT<br>Read Lights (Opt.1- 19 ) |
|---|---|

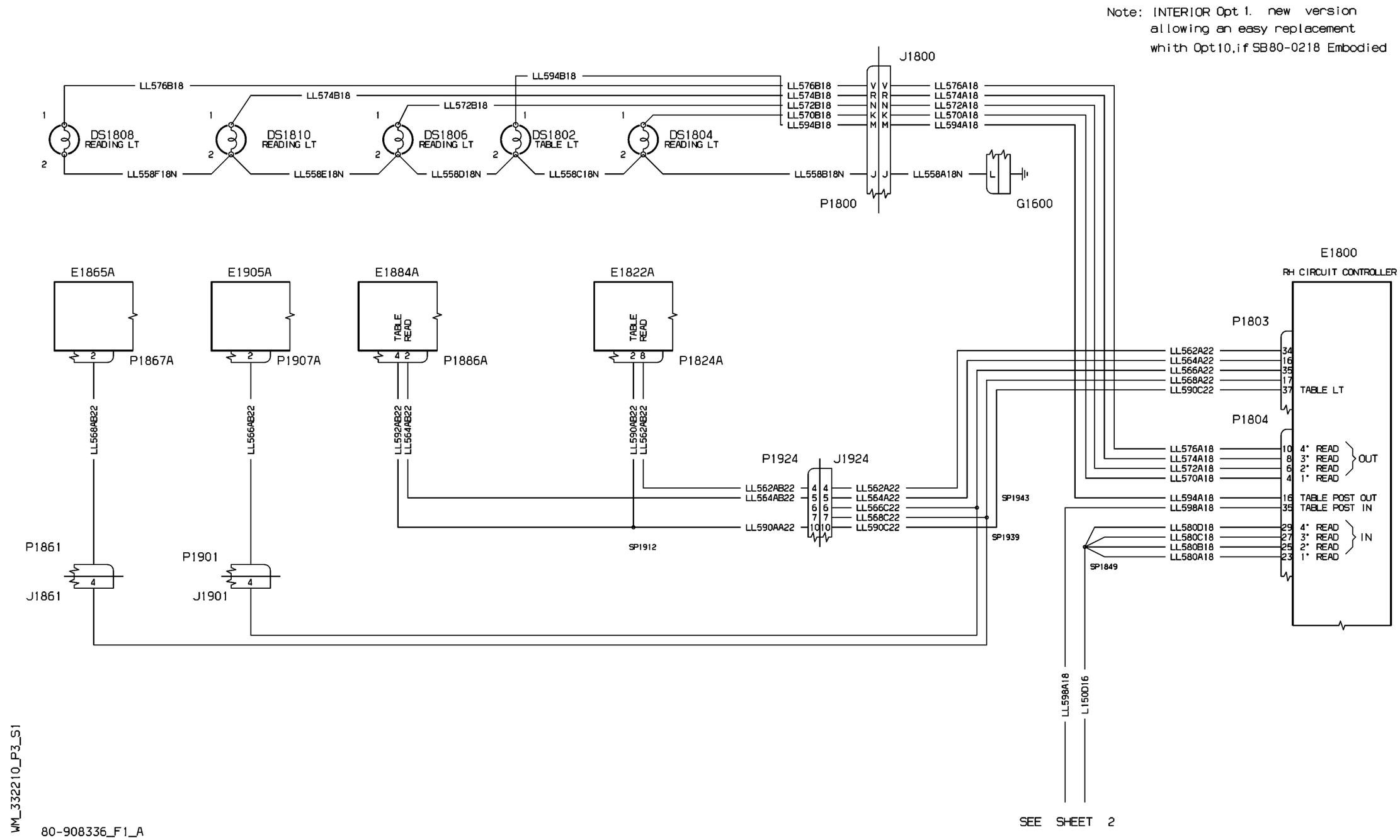


| EFFECTIVITY: | PASSENGER COMPARTMENT<br>Read Lights (Opt.1 - MM) |
|---|---|

**33-22-10**

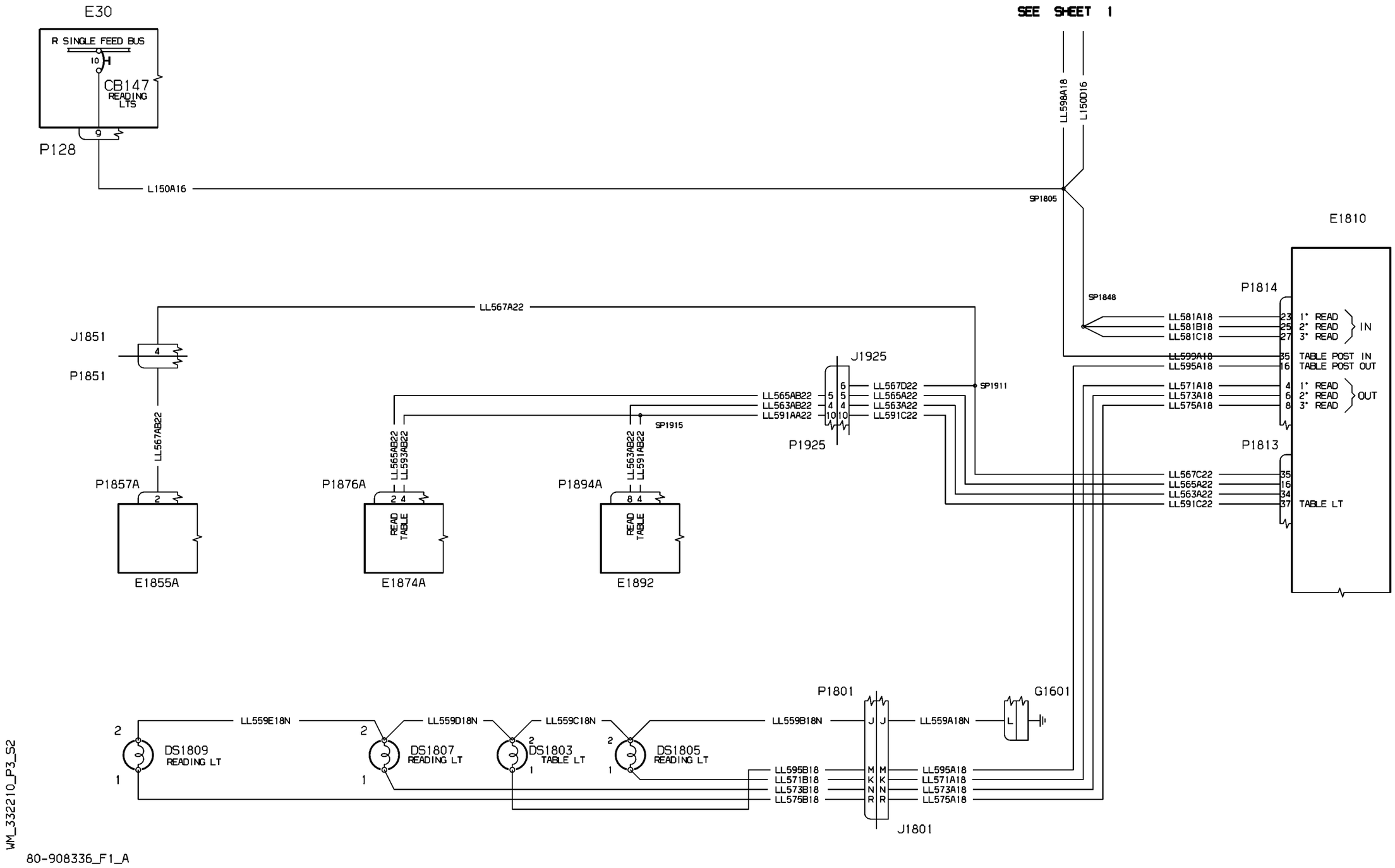
E30
R SINGLE FEED BUS
10
CB147
READING LTS
9
P128
L150A16
SEE SHEET 1
LL598A18
L150D16
SP1805
E1810
P1814
SP1848
LL581A18
LL581B18
LL581C18
23 1° READ
25 2° READ
27 3° READ
IN
LL599A18
LL595A18
35 TABLE POST IN
16 TABLE POST OUT
LL571A18
LL573A18
LL575A18
4 1° READ
6 2° READ
8 3° READ
OUT
P1813
LL567C22
LL565A22
LL563A22
LL591C22
35
16
34
37 TABLE LT
LL567A22
J1851
4
P1851
LL567AB22
P1857A
2
E1855A
J1925
LL565AB22
LL563AB22
LL591AA22
SP1915
6 LL567D22
5 LL565A22
4 LL563A22
10 LL591C22
SP1911
P1925
LL565AB22
LL593AB22
P1876A
2 4
READ TABLE
E1874A
LL563AB22
LL591AB22
P1894A
8 4
READ TABLE
E1892
P1801
G1601
LL559E18N
LL559D18N
LL559C18N
LL559B18N
LL559A18N
DS1809 READING LT
DS1807 READING LT
DS1803 TABLE LT
DS1805 READING LT
LL595B18
LL571B18
LL573B18
LL575B18
LL595A18
LL571A18
LL573A18
LL575A18
J1801
WM_332210_P3_S2
80-908336_F1_A

80M000167_1/A

WM_332210_04_01

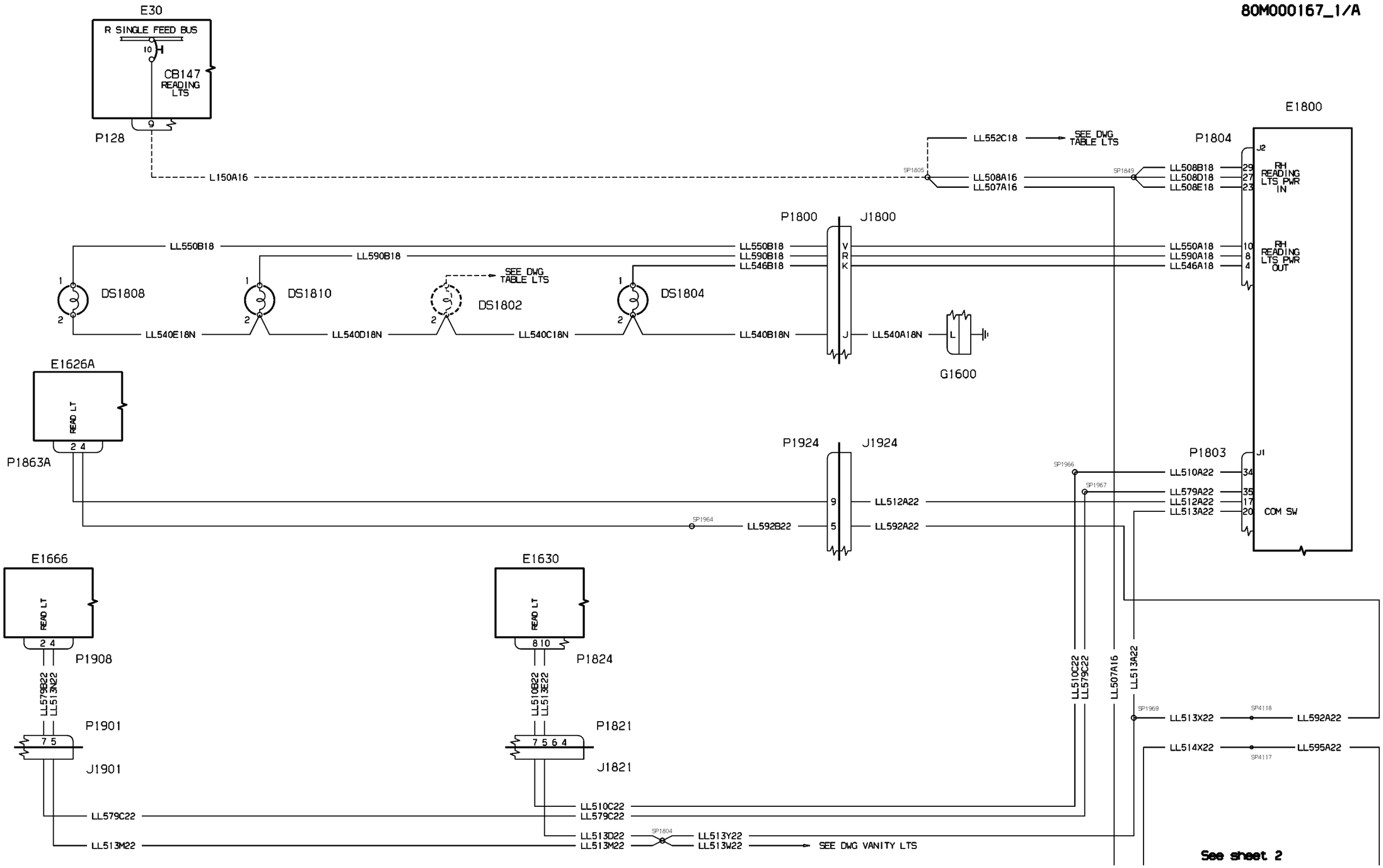


| EFFECTIVITY: | PASSENGER COMPARTMENT |
|---|---|
| 1032-1032 | Reading Lights |

**33-22-10**

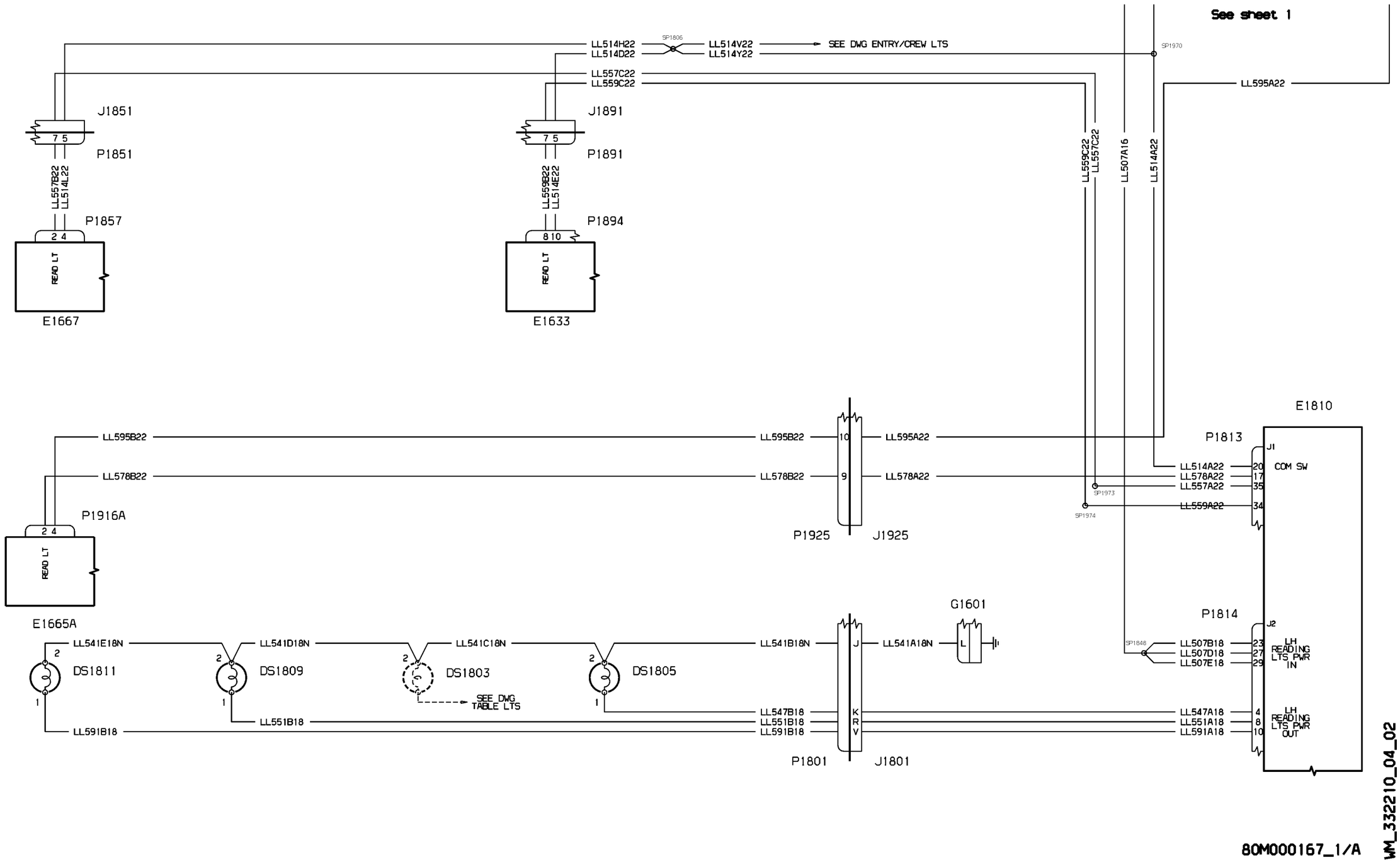
See sheet 1
LL514H22
LL514D22
SP1806
LL514V22
LL514Y22
SEE DWG ENTRY/CREW LTS
SP1970
LL557C22
LL559C22
LL595A22
J1851
P1851
J1891
P1891
LL557B22
LL514L22
LL559B22
LL514E22
P1857
P1894
READ LT
E1667
E1633
LL559C22
LL557C22
LL507A16
LL514A22
E1810
P1813
COM SW
LL595B22
LL578B22
P1916A
READ LT
E1665A
P1925
J1925
LL514A22
LL578A22
LL557A22
LL559A22
SP1973
SP1974
G1601
P1814
LL541E18N
LL541D18N
LL541C18N
LL541B18N
LL541A18N
DS1811
DS1809
DS1803
DS1805
SEE DWG TABLE LTS
LL551B18
LL591B18
LL547B18
P1801
J1801
SP1846
LL507B18
LL507D18
LL507E18
LH READING LTS PWR IN
LL547A18
LL551A18
LL591A18
LH READING LTS PWR OUT
80M000167_1/A
WM_332210_04_02

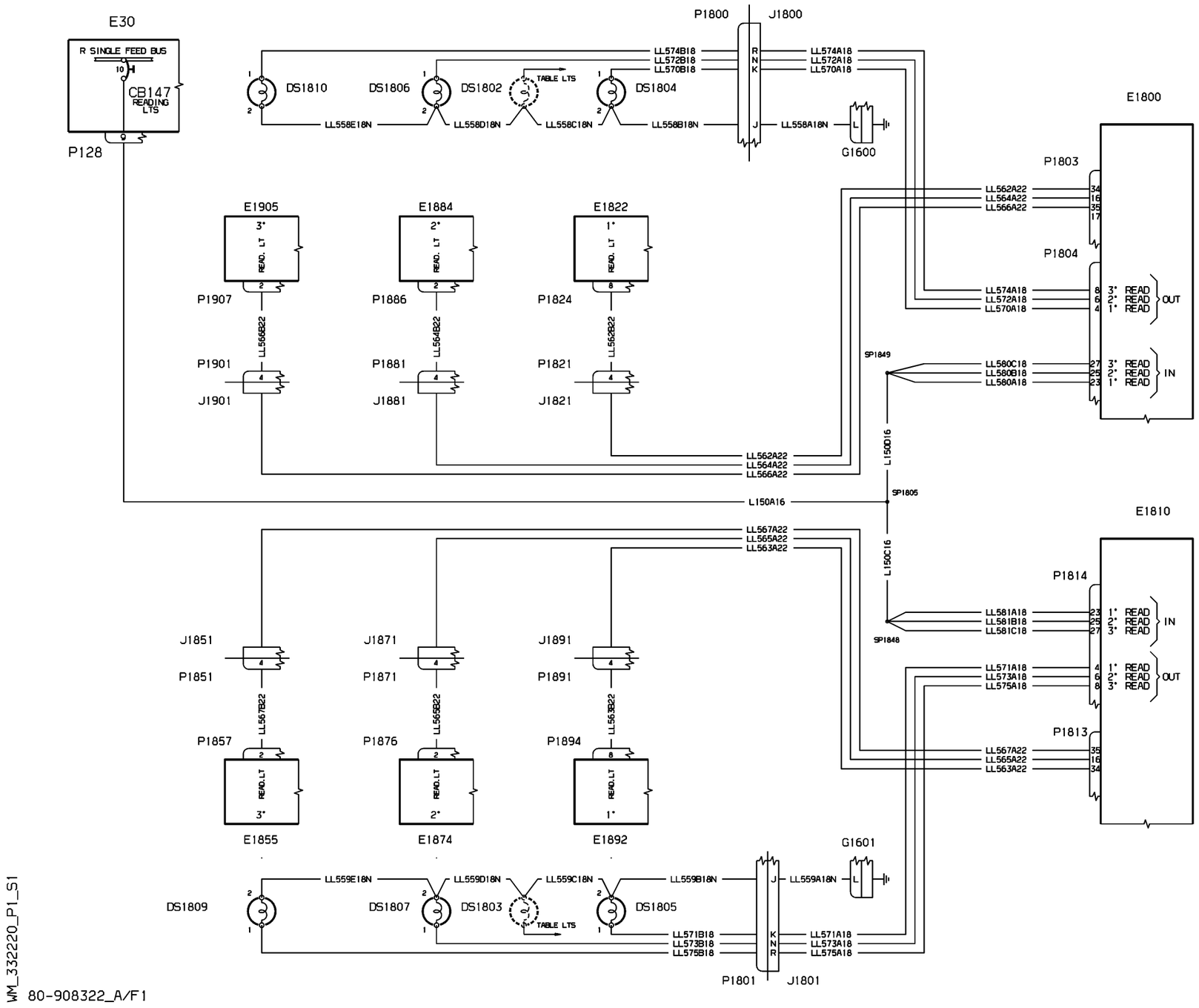


WM_332220_P1_S1

80-908322_A/F1

| EFFECTIVITY: | PASSENGER COMPARTMENT<br>Read Lights (Opt.2) |
|---|---|

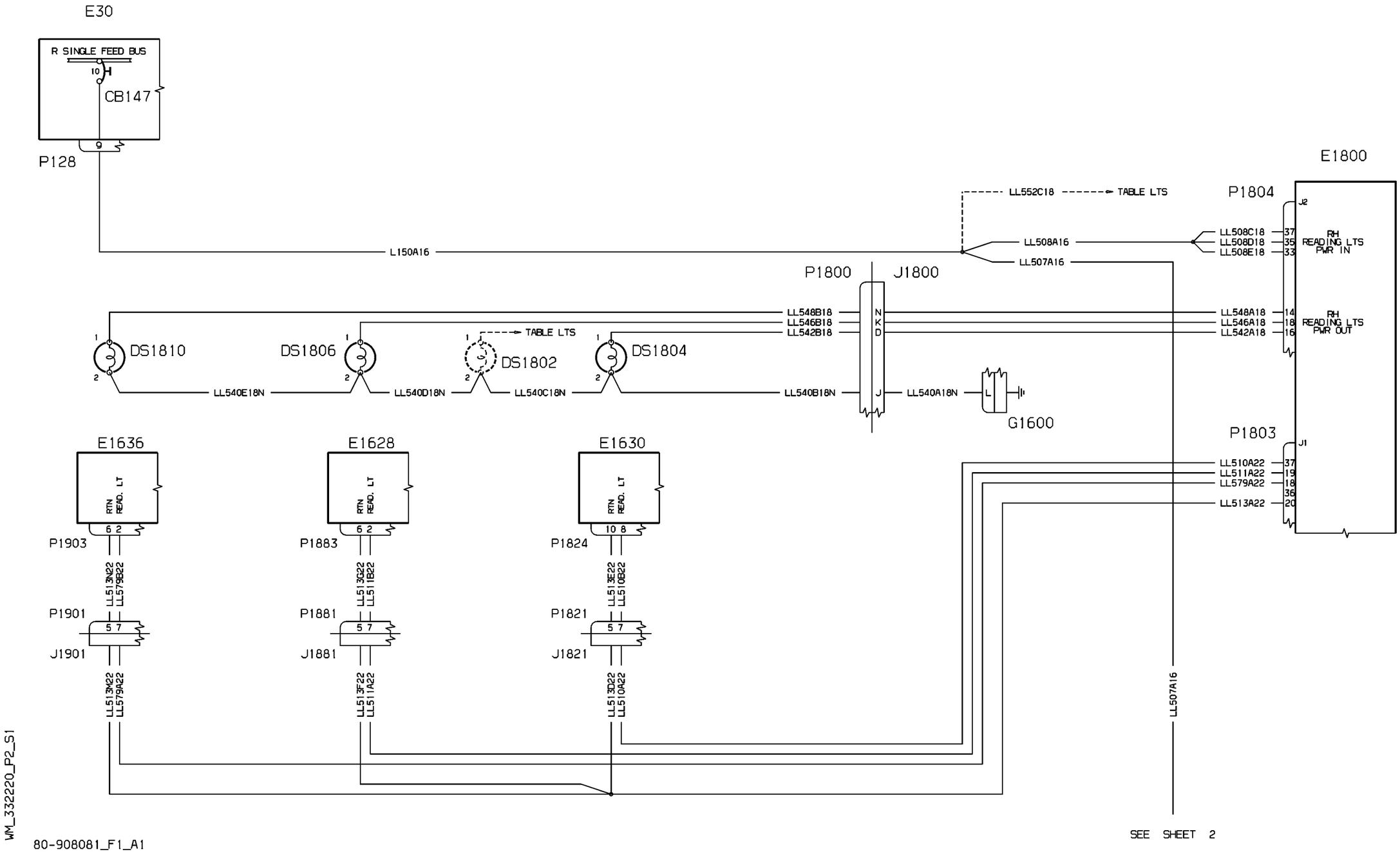


| EFFECTIVITY: 1035,1045 | PASSENGER COMPARTMENT<br>Read Lights (Opt.2 ) |
|---|---|

**33-22-20**

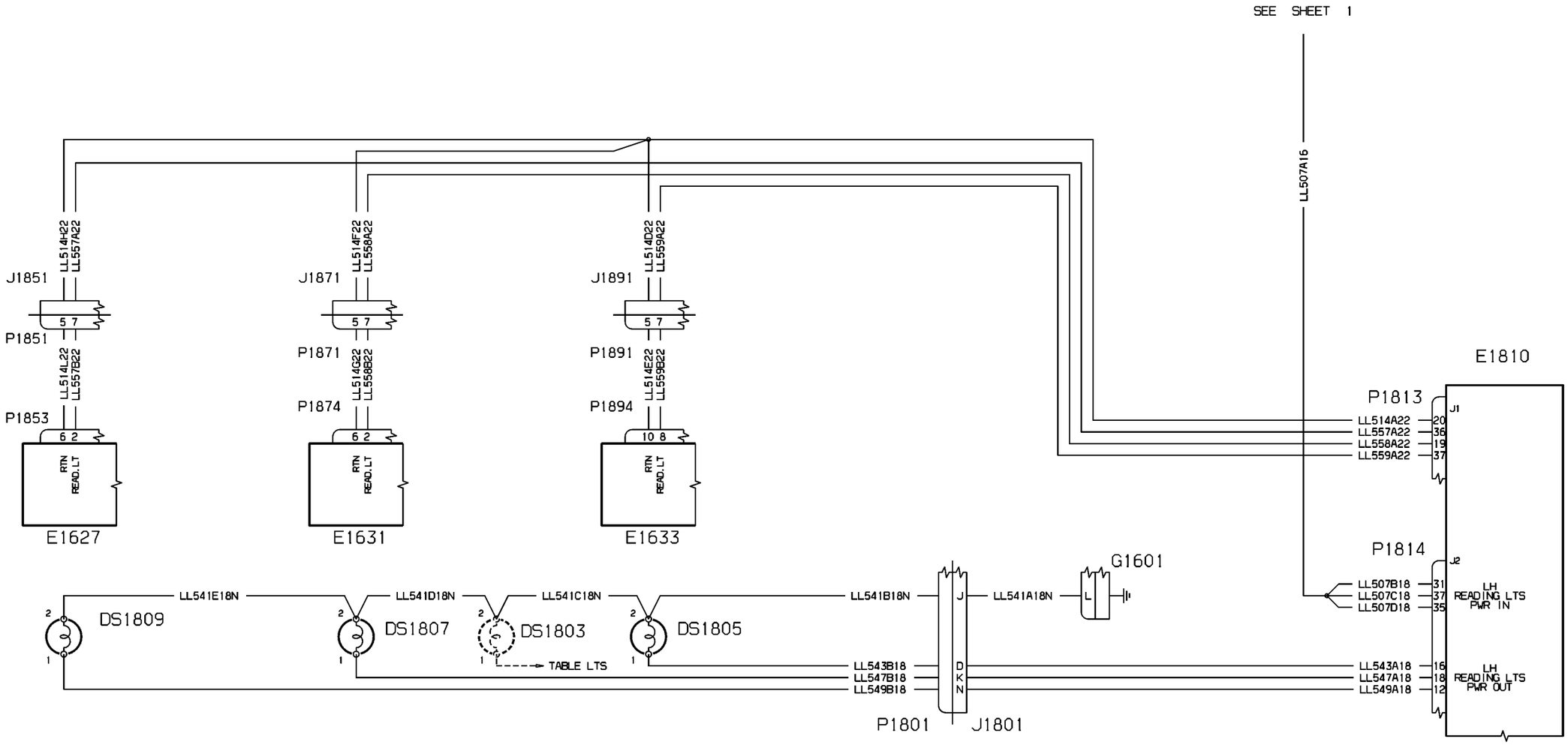


WM_332220_P2_S2

80-908081_F1_A1

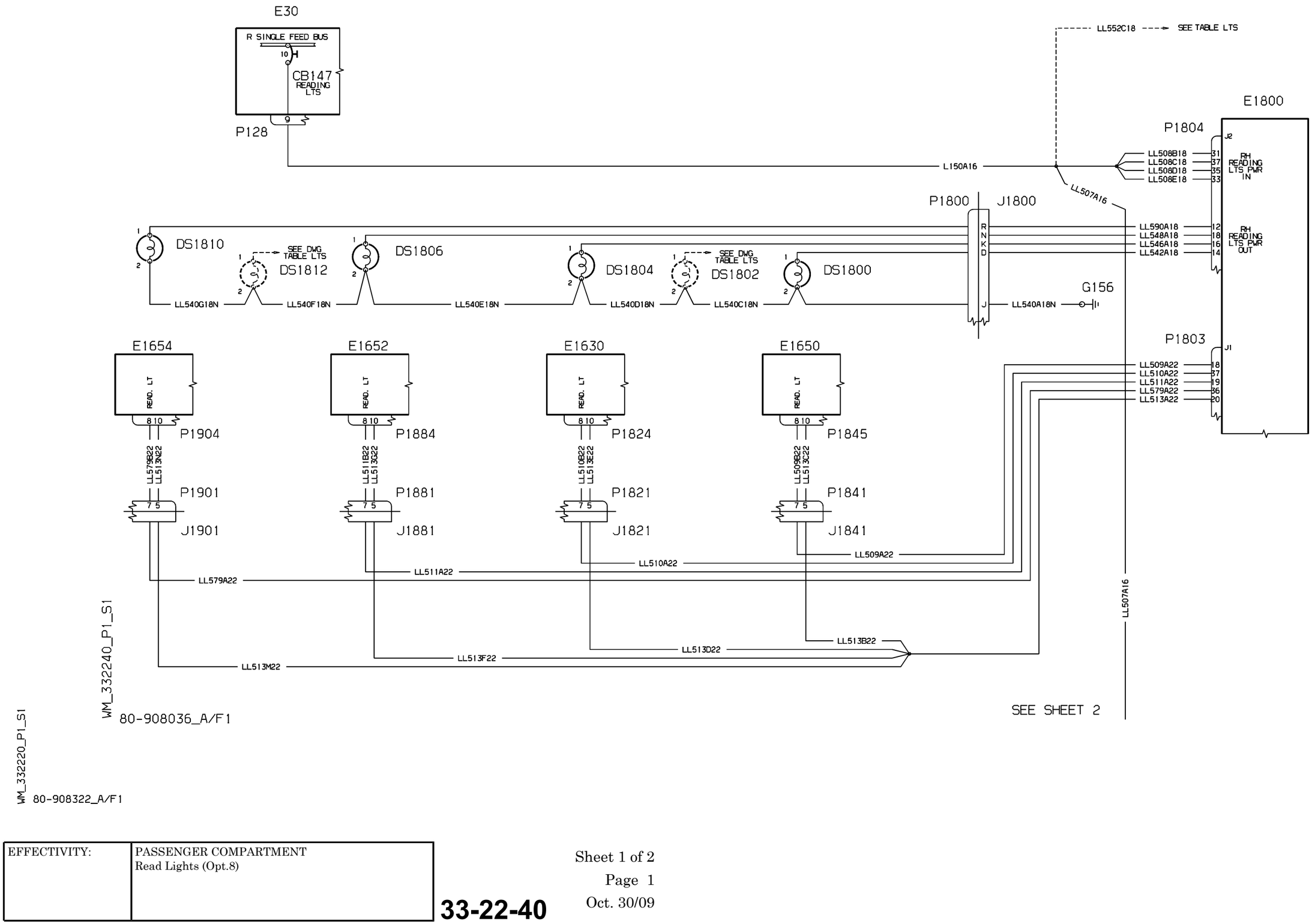


| EFFECTIVITY: | PASSENGER COMPARTMENT<br>Read Lights (Opt.8) |
|---|---|

**33-22-40**

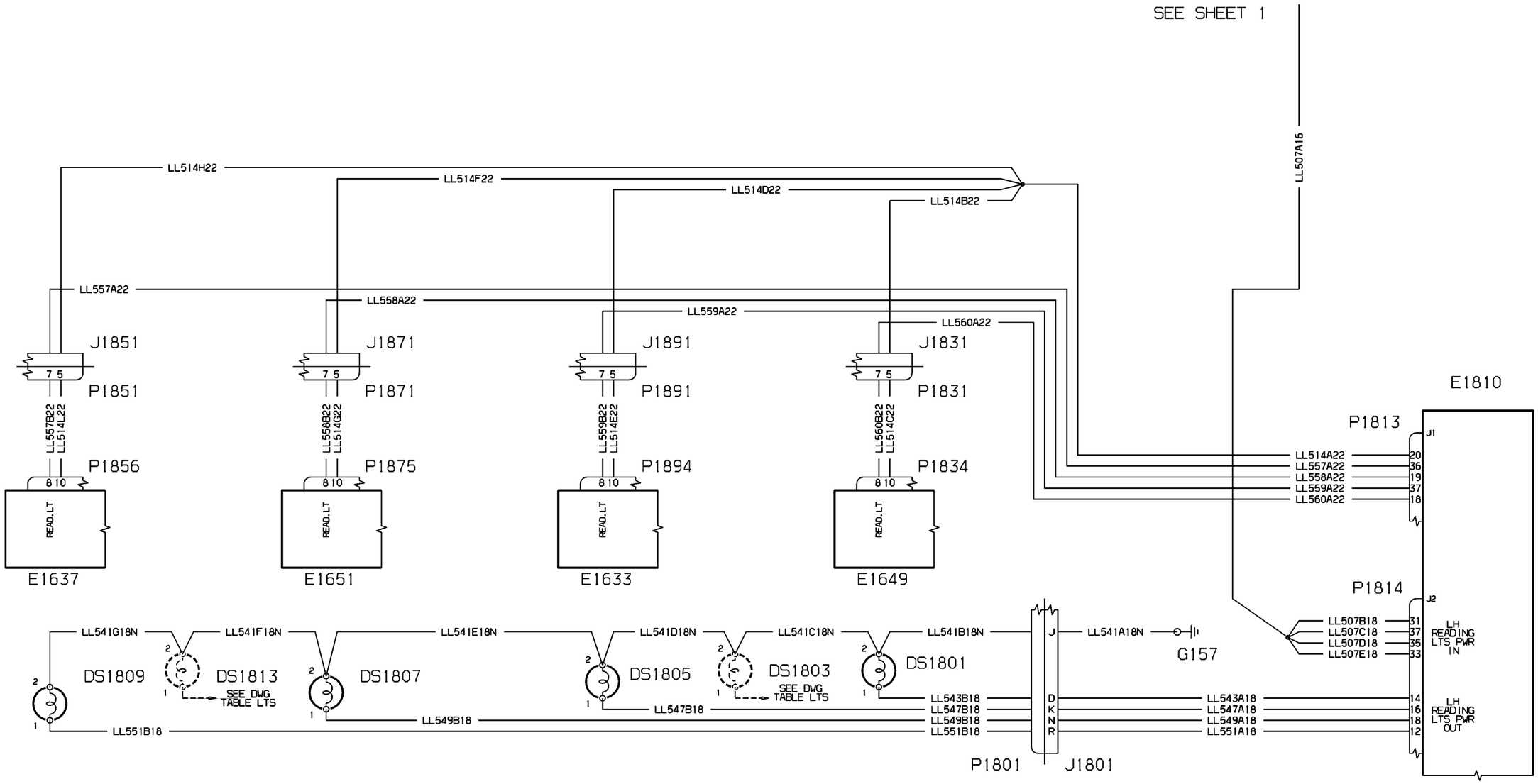


WM_332240_P1_S2

80-908036_A/F1

| EFFECTIVITY: | PASSENGER COMPARTMENT<br>Read Lights (Opt.8) |
|---|---|

**33-22-40**

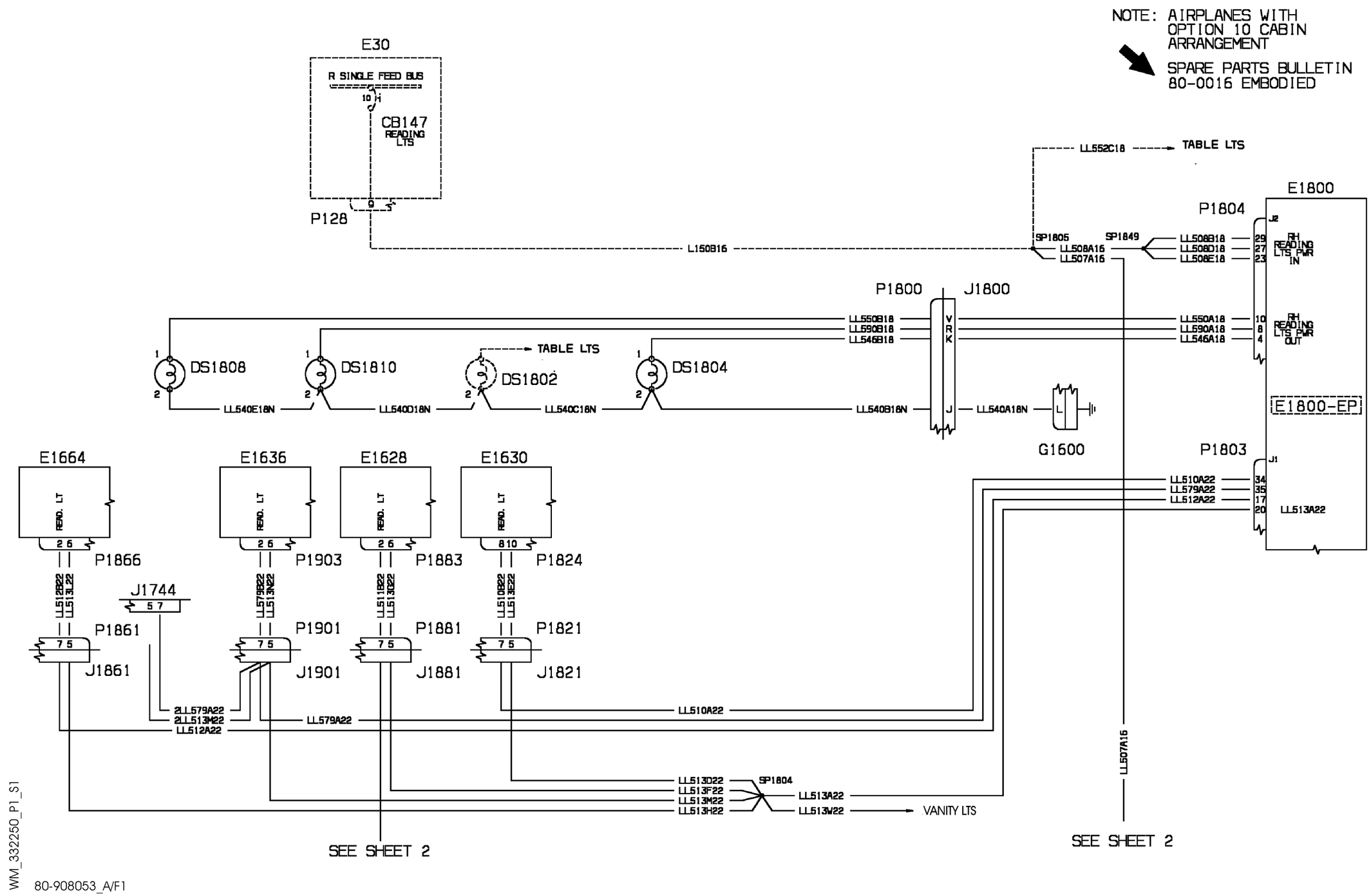


| EFFECTIVITY: 1023-1025,1028-1030 | PASSENGER COMPARTMENT<br>Read Lights (Opt.10 AMI) |
|---|---|

**33-22-50**

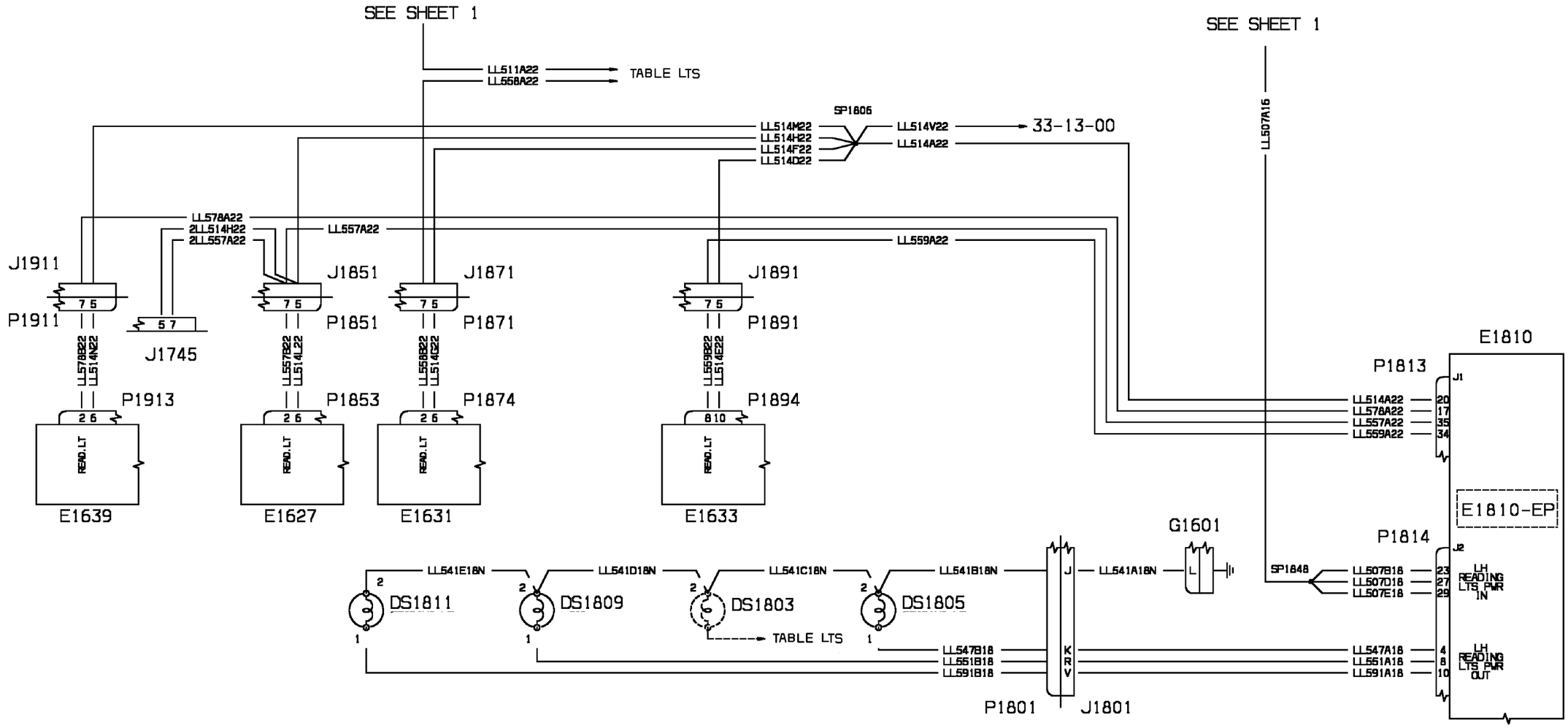


NOTE: AIRPLANES WITH OPTION 10 CABIN ARRANGEMENT

SPARE PARTS BULLETIN 80-0016 EMBODIED

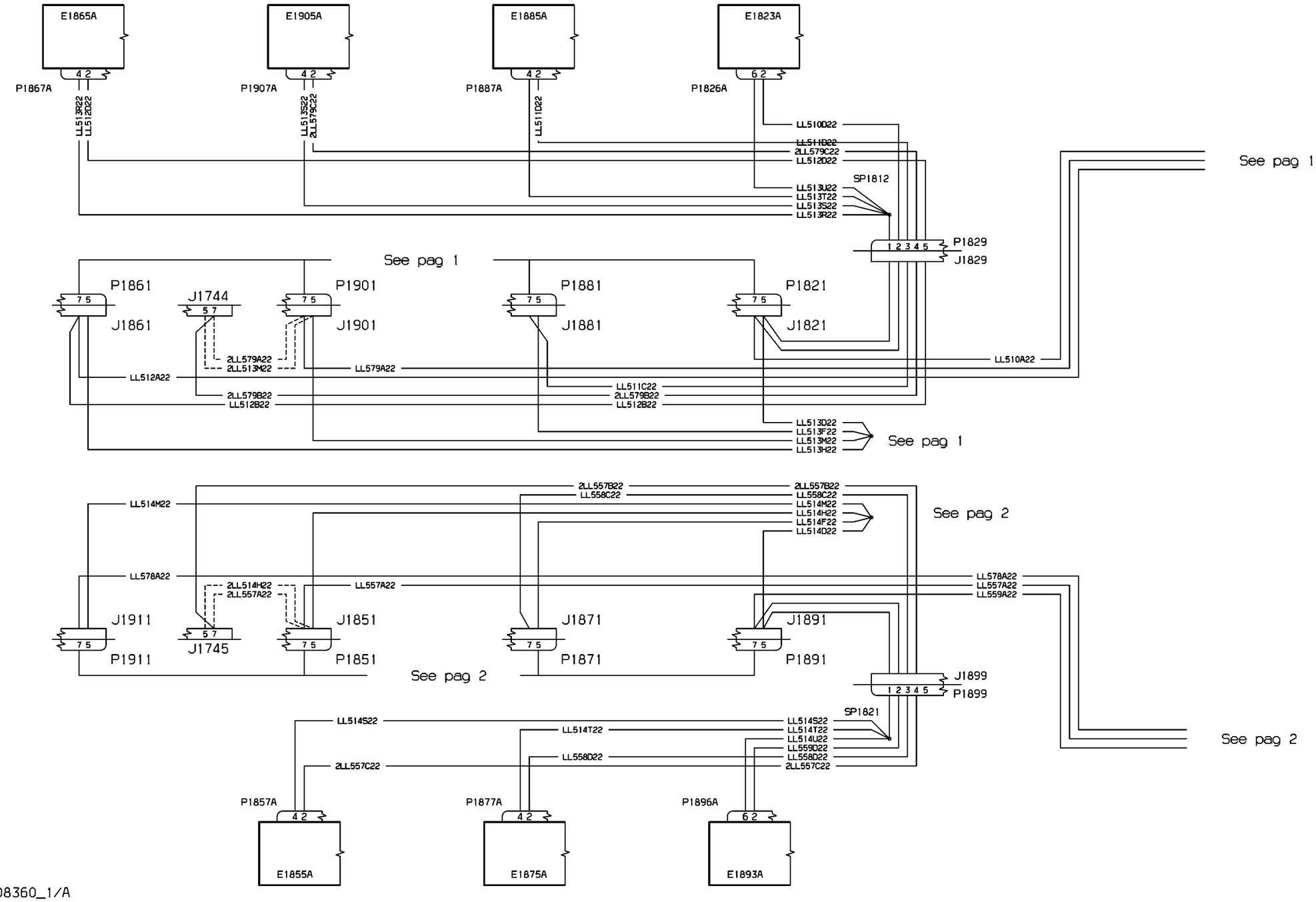


WM_332250_P1_S3

80K908360_1/A

| EFFECTIVITY: | PASSENGER COMPARTMENT |
|---|---|
| 1023-1025,1028-1030 | Read Lights Upgrade (Opt. 10 AMI) |

**33-22-50**

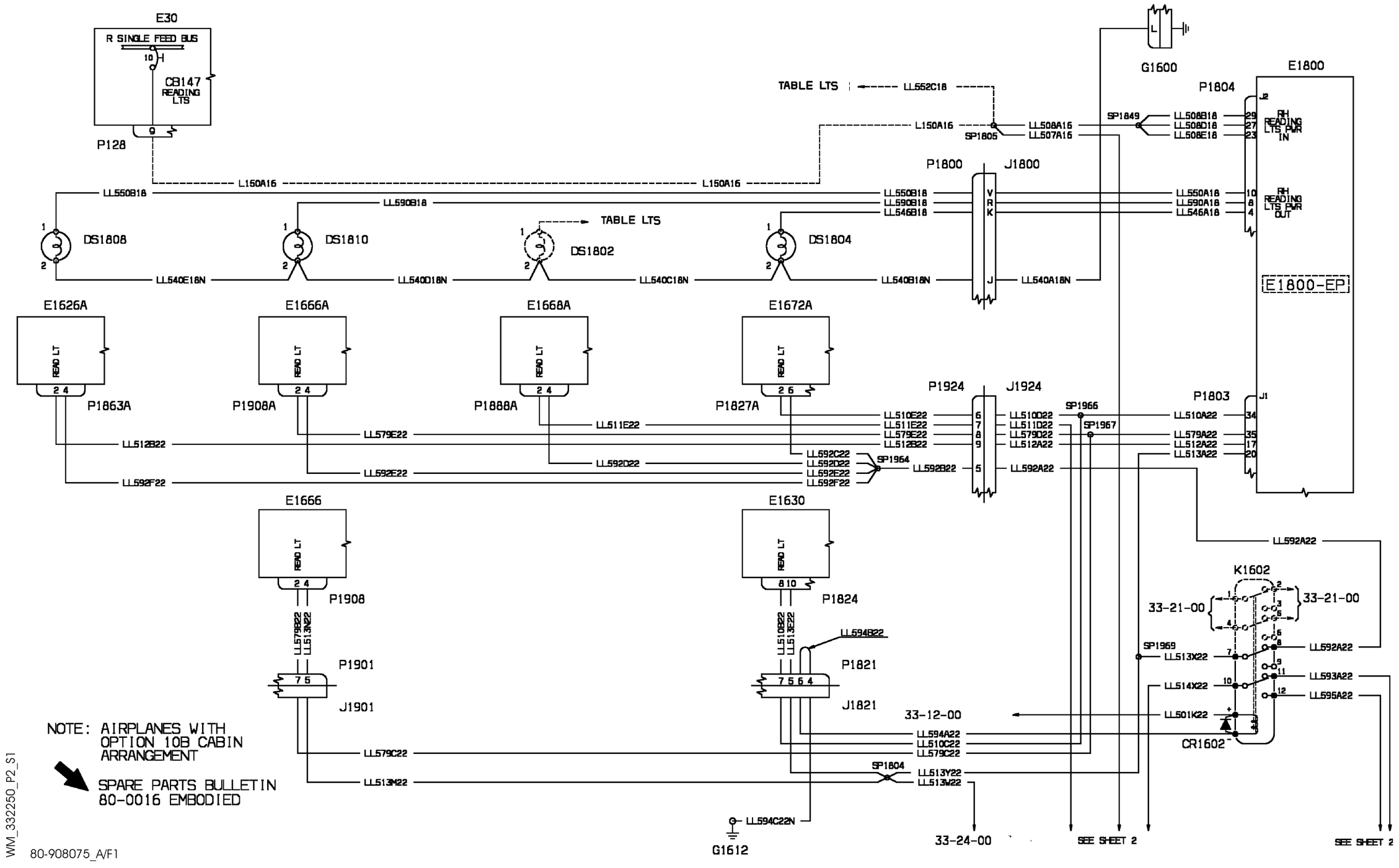


| EFFECTIVITY: | PASSENGER COMPARTMENT |
|---|---|
| 1026-1027,1031 | Read Lights (Opt.10 E.I. ) |

**33-22-50**

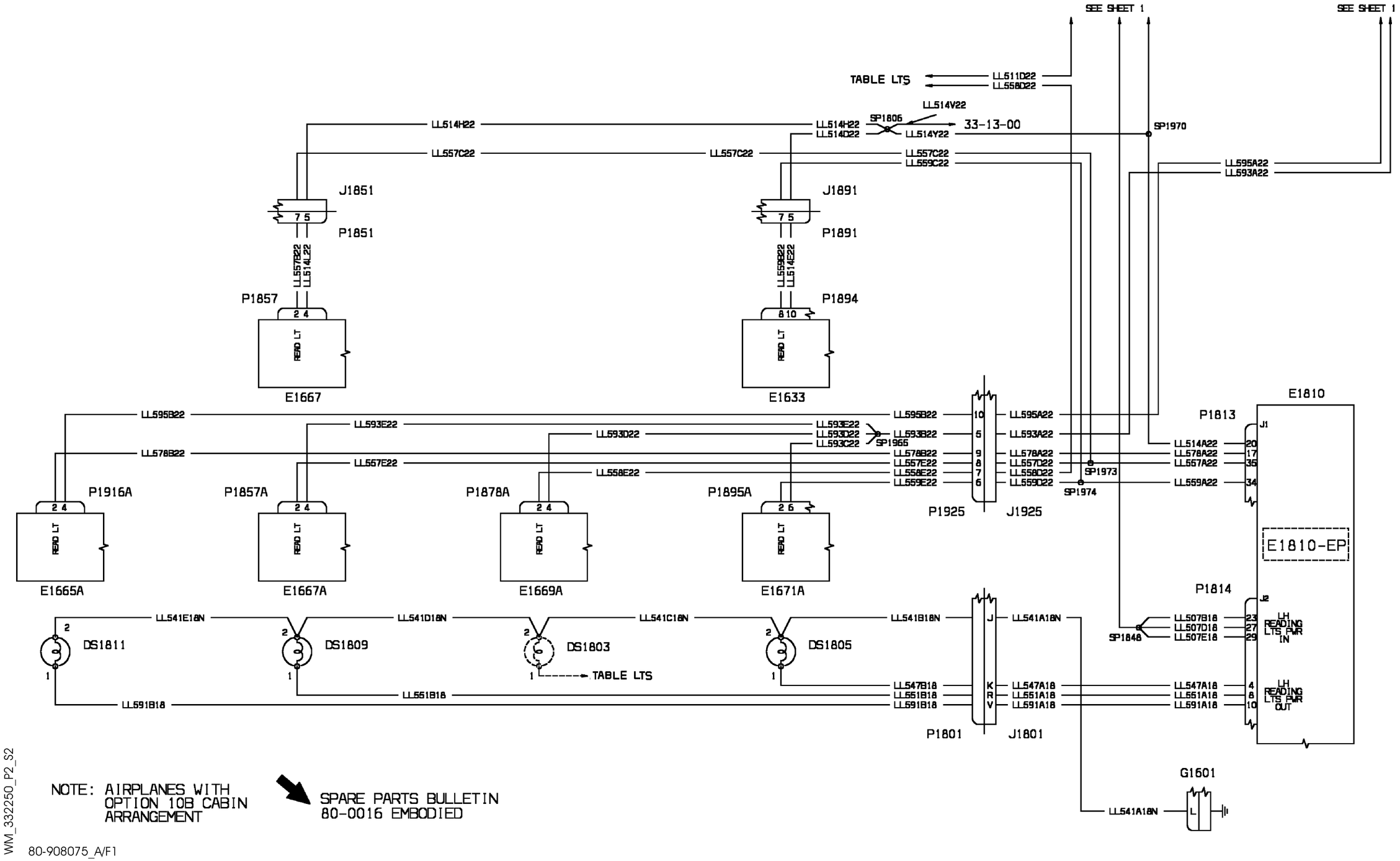


WM_332250_P2_S2

80-908075_A/F1

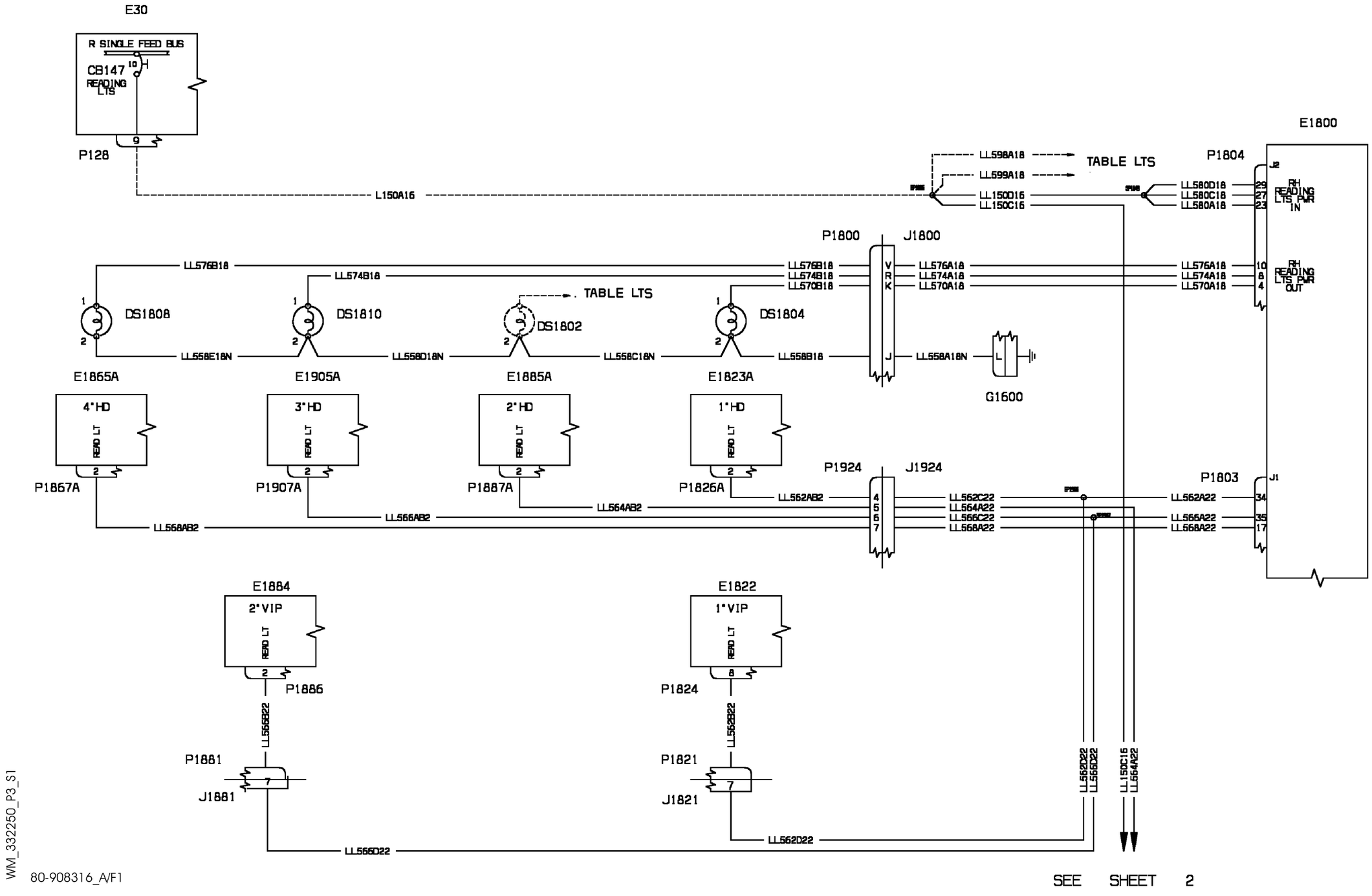


WM_332250_P3_S1

80-908316_A/F1

| EFFECTIVITY: | PASSENGER COMPARTMENT |
|---|---|
| 1041,1047,1053,1058, 1071,1075,1078,1082, 1087,1094,1096 | Read Lights (Opt.10 SMA ) |

**33-22-50**

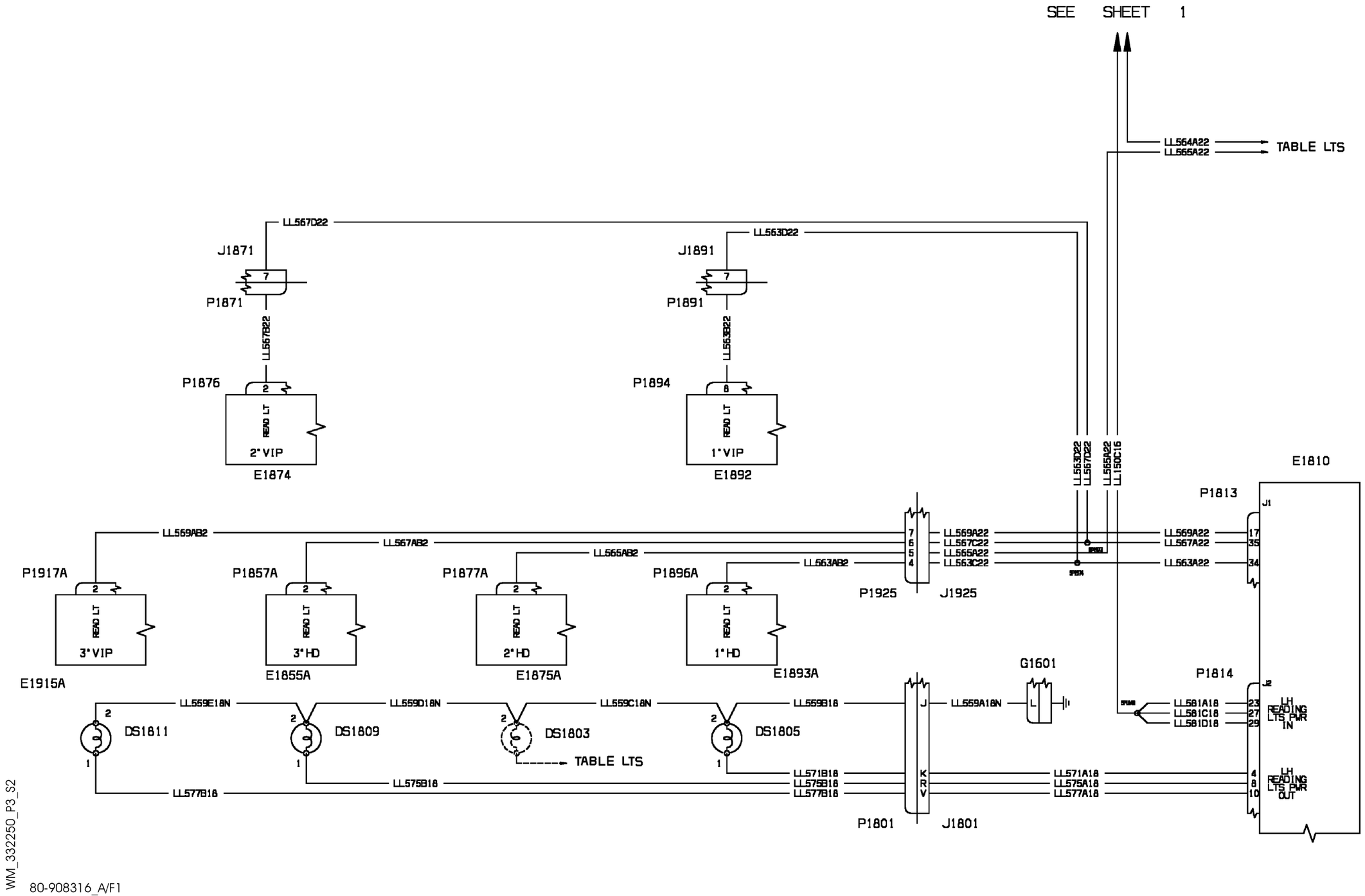


| EFFECTIVITY: | PASSENGER COMPARTMENT |
|---|---|
| 1041,1047,1053,1058, 1071,1075,1078,1082, 1087,1094,1096 | Read Lights (Opt.10 SMA ) |

**33-22-50**

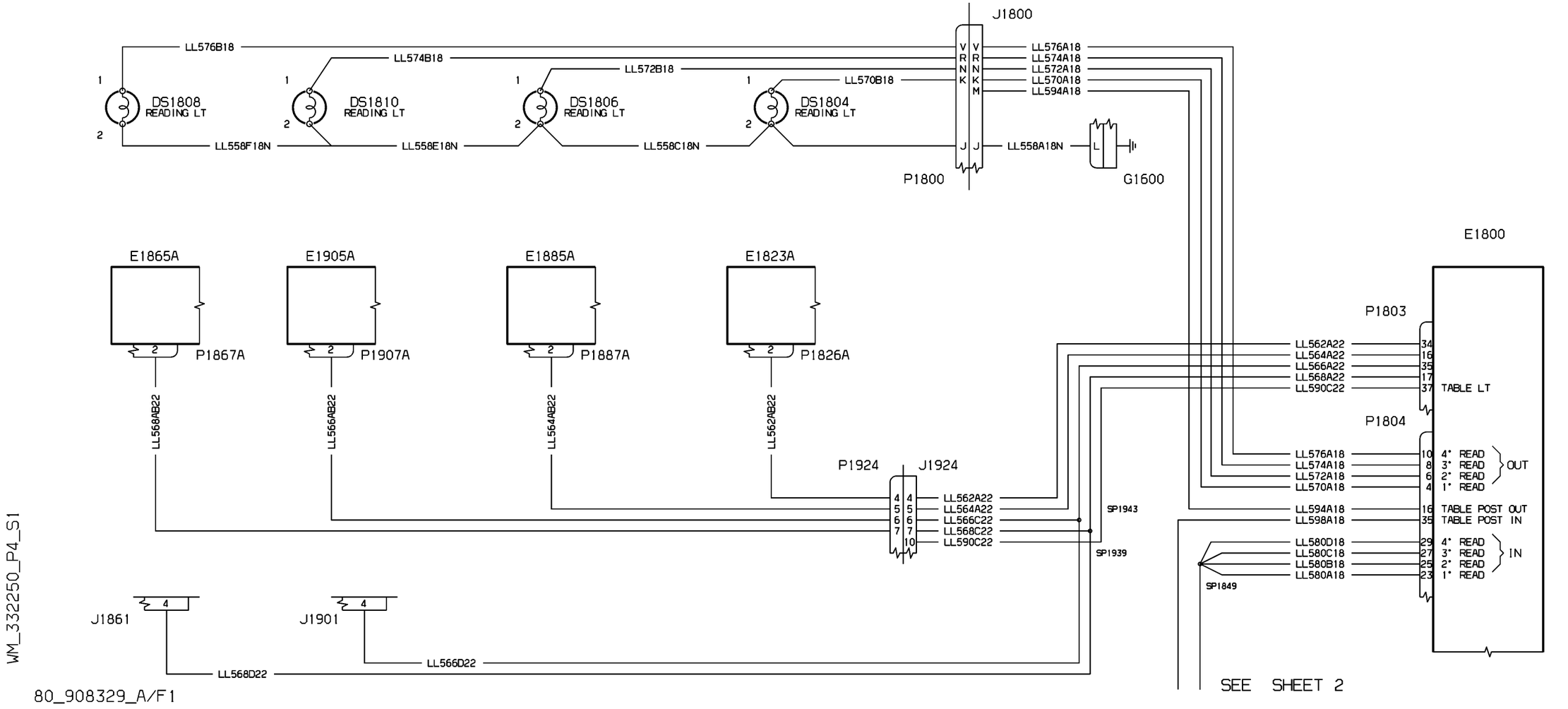


| EFFECTIVITY: 1076,1085,1090 | PASSENGER COMPARTMENT Read Lights (Opt.10 MM ) |
|---|---|

**33-22-50**

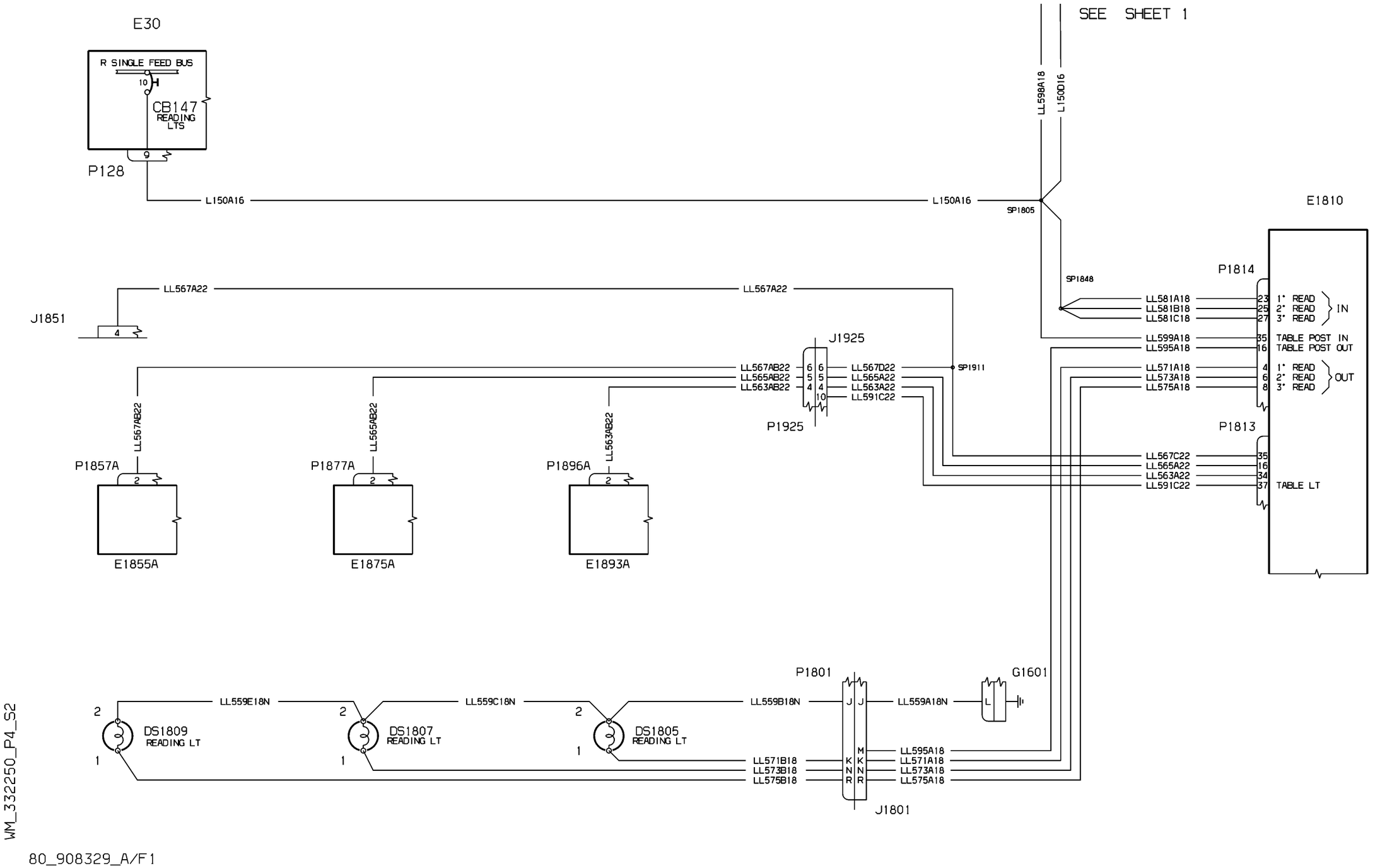


| EFFECTIVITY: 1076,1085,1090 | PASSENGER COMPARTMENT Read Lights (Opt.10 MM ) |
|---|---|

**33-22-50**

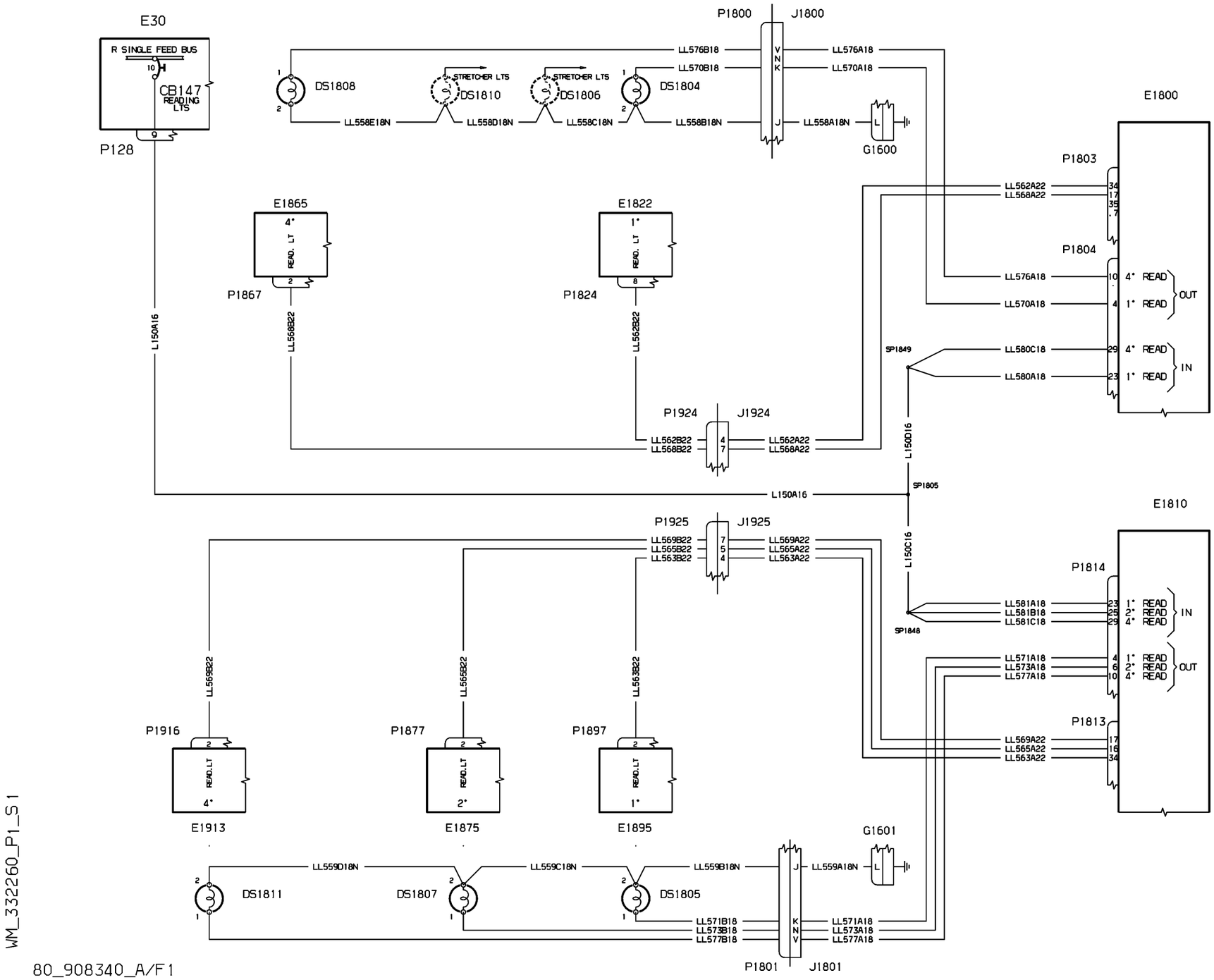


| EFFECTIVITY: | PASSENGER COMPARTMENT<br>Read Lights (Opt. 20 ) |
|---|---|

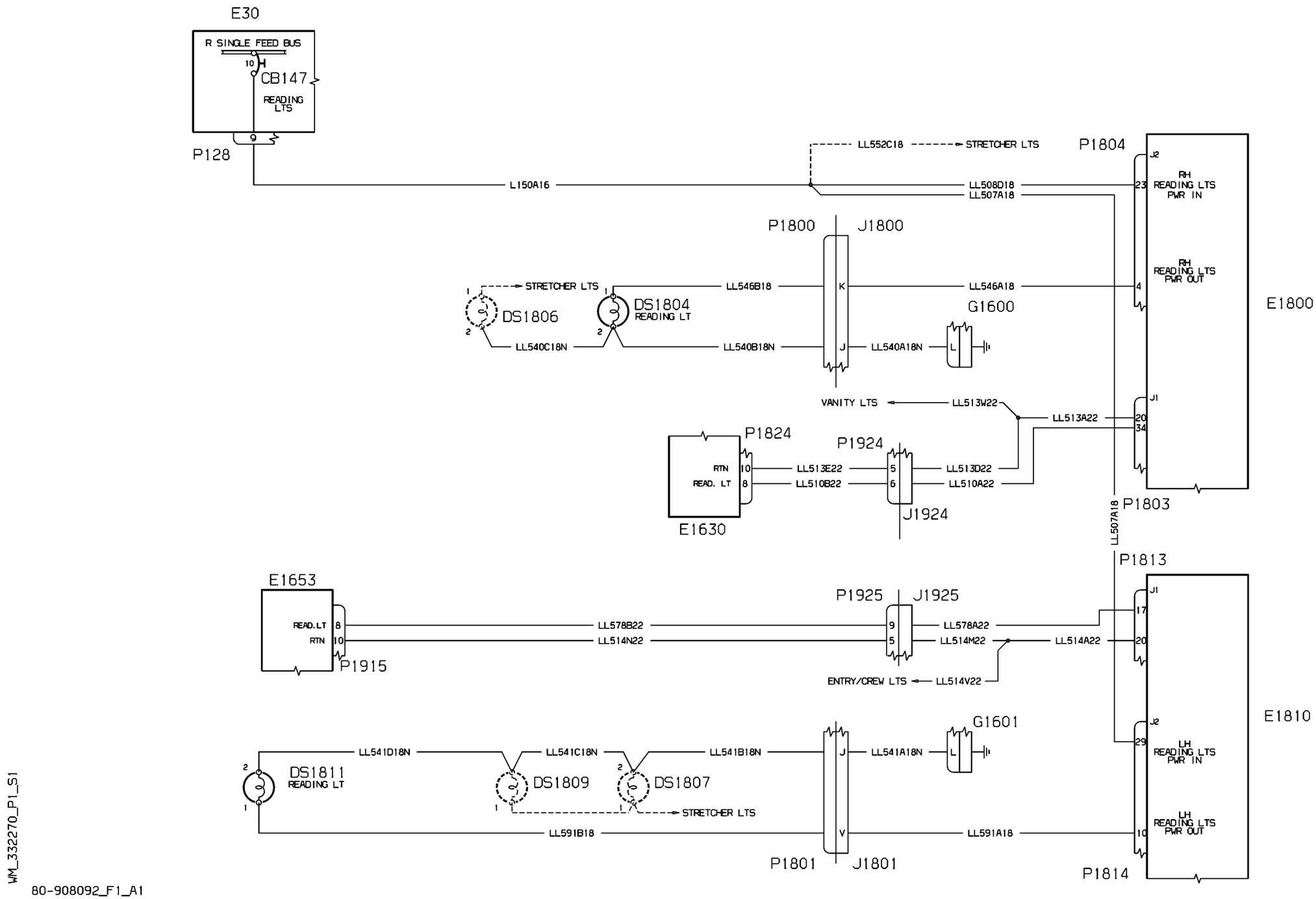


| EFFECTIVITY: | PASSENGER COMPARTMENT<br>Read Lights (Opt. 17 ) |
|---|---|

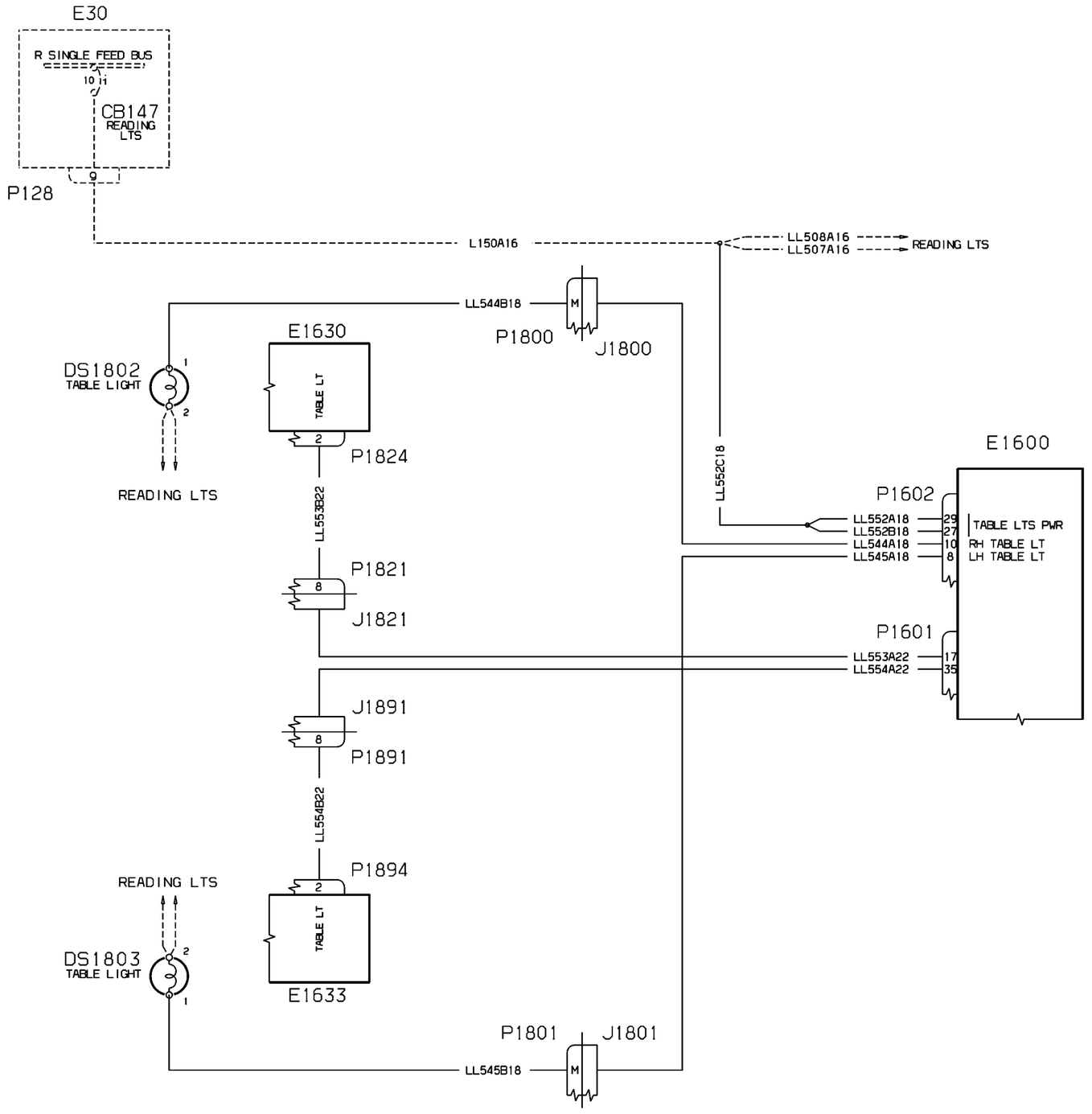


WM_332300_P1_S1

80-908069_A/F1

| EFFECTIVITY: | PASSENGER COMPARTMENT |
|---|---|
| 1034,1035,1045 | Table Lights (Opt.1 - 2) |

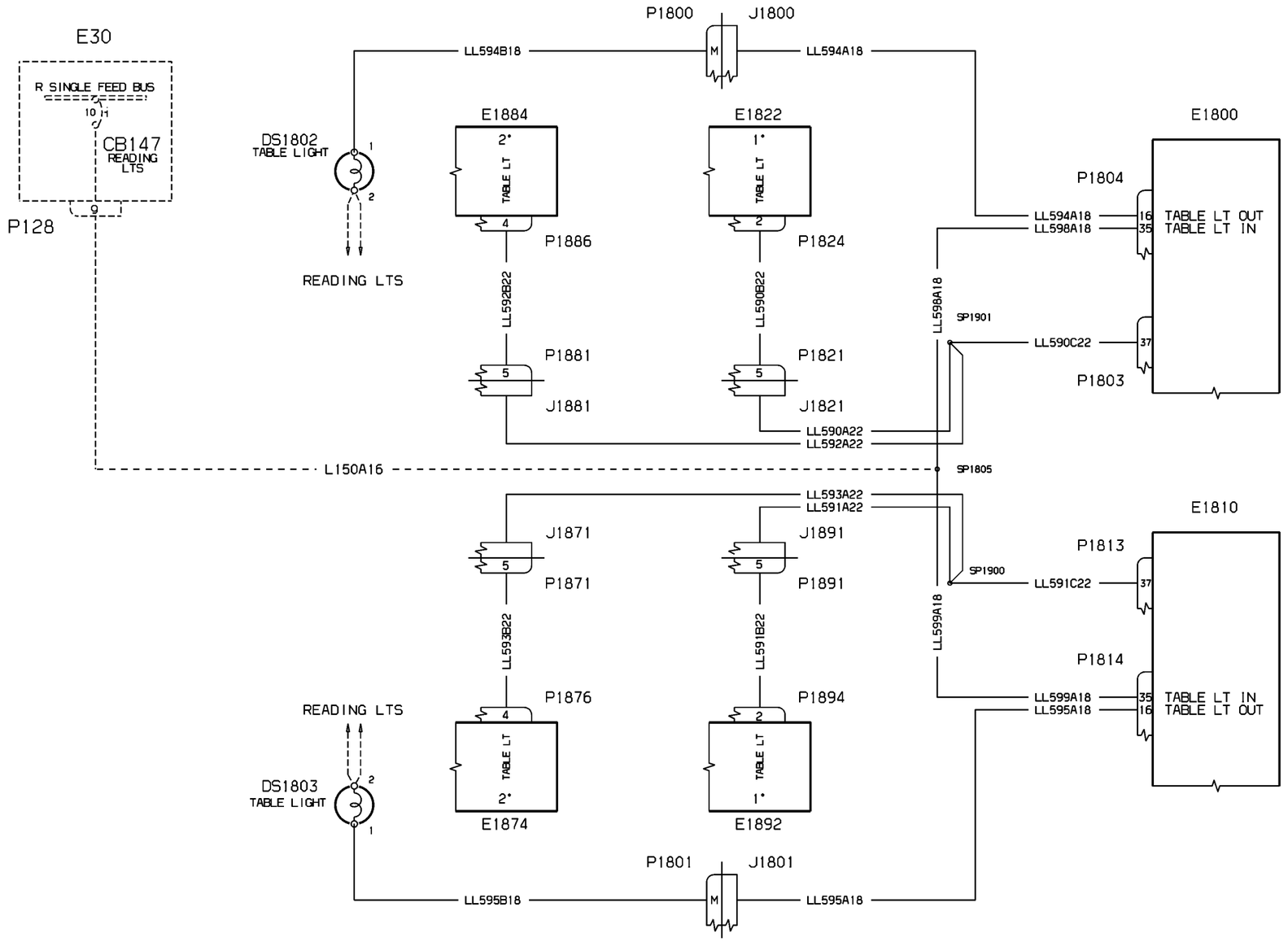


WM_332300_P2_S1

80-908305_A/F1

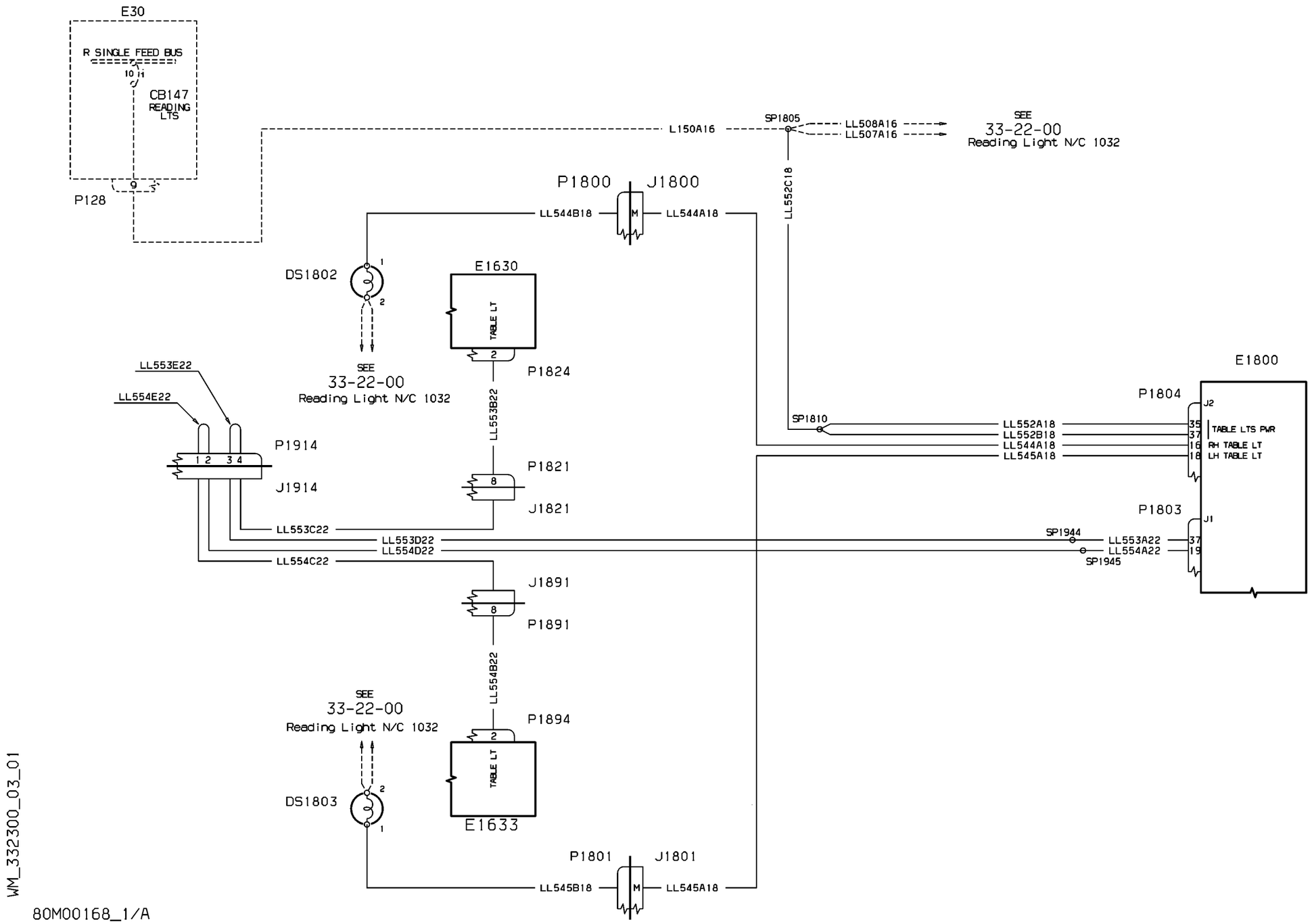


WM_332300_03_01

80M00168_1/A

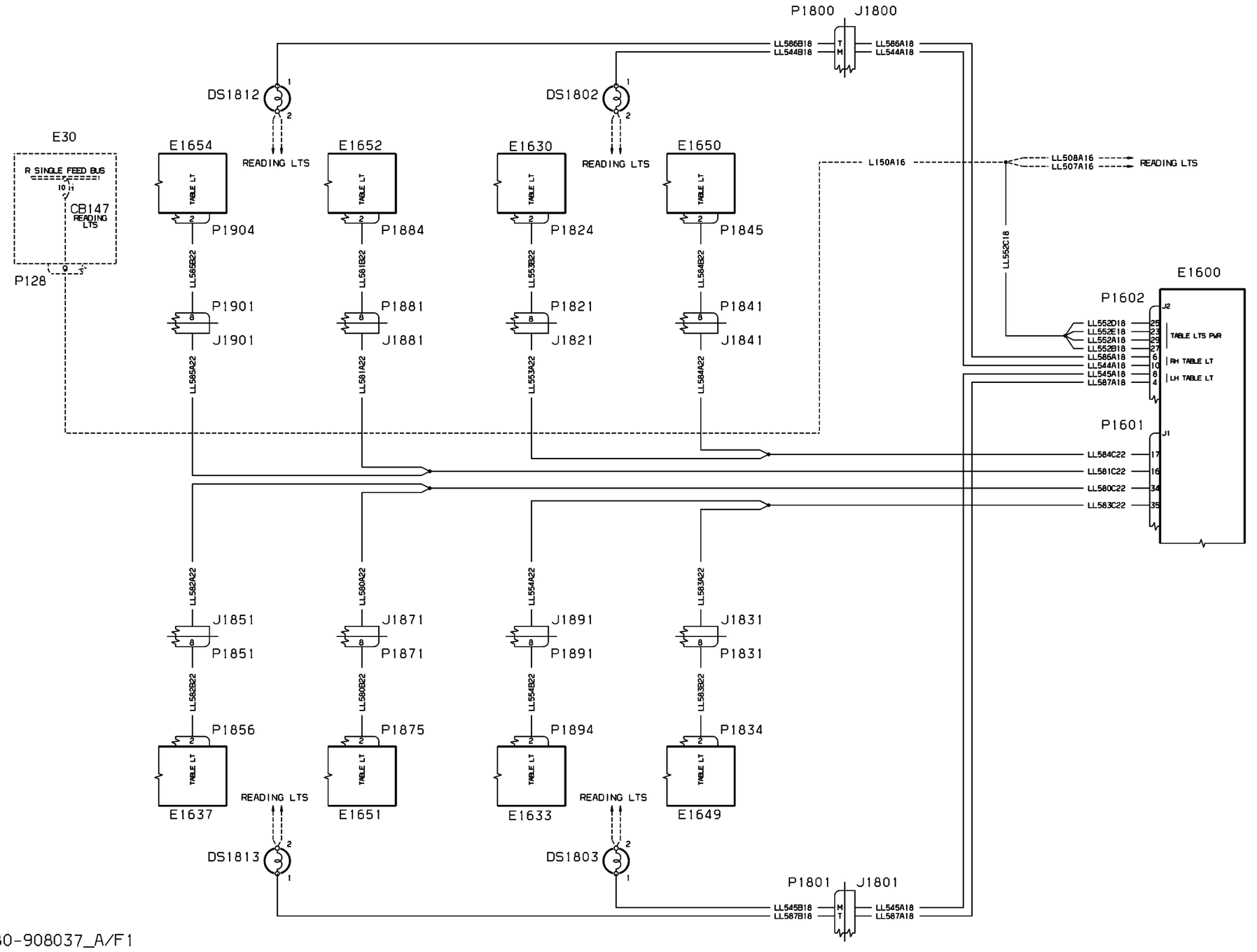


WM_332300_P4_S1

80-908037_A/F1

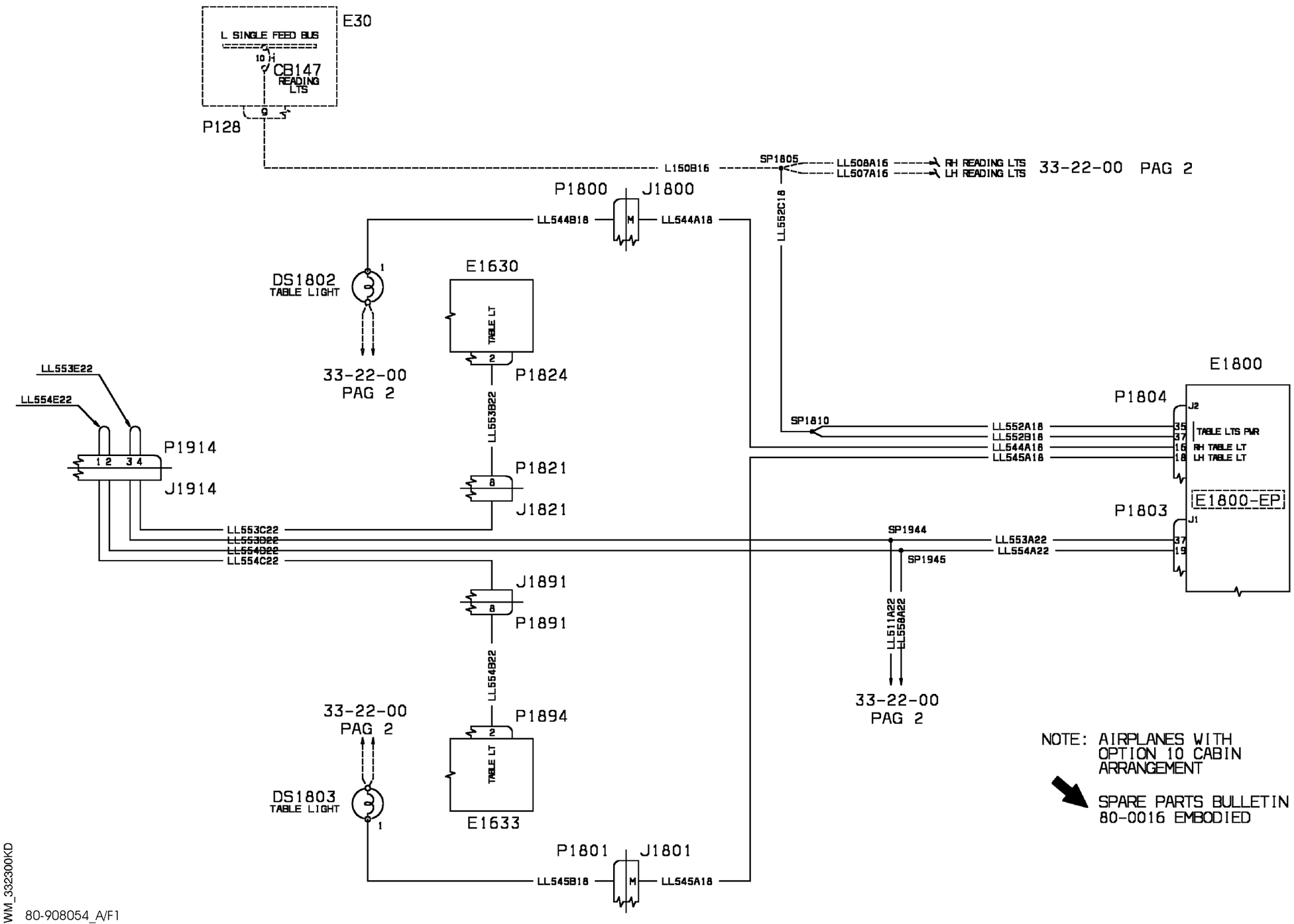


WM_332300KD
80-908054_A/F1

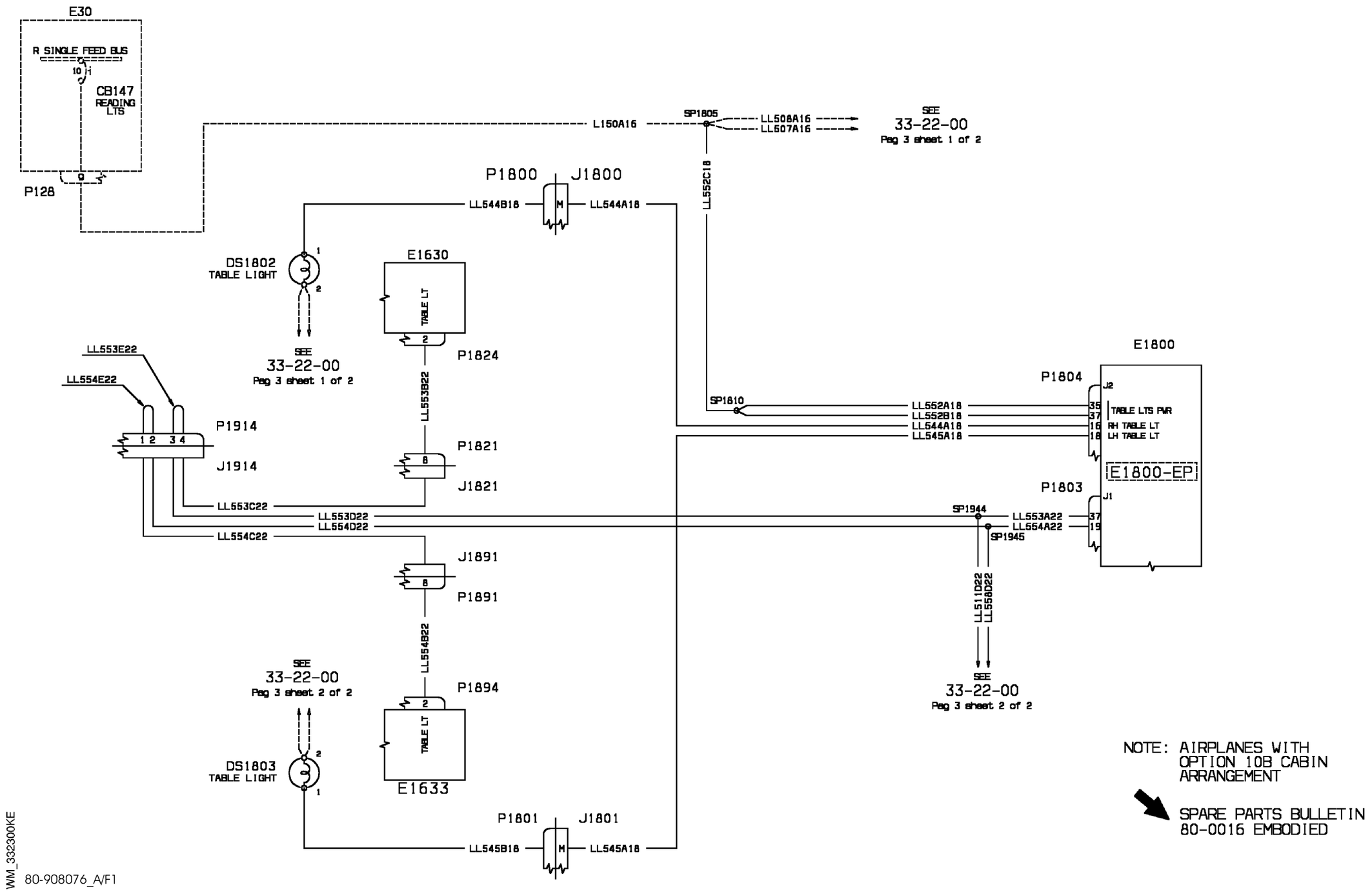


WM_332300KE

80-908076_A/F1

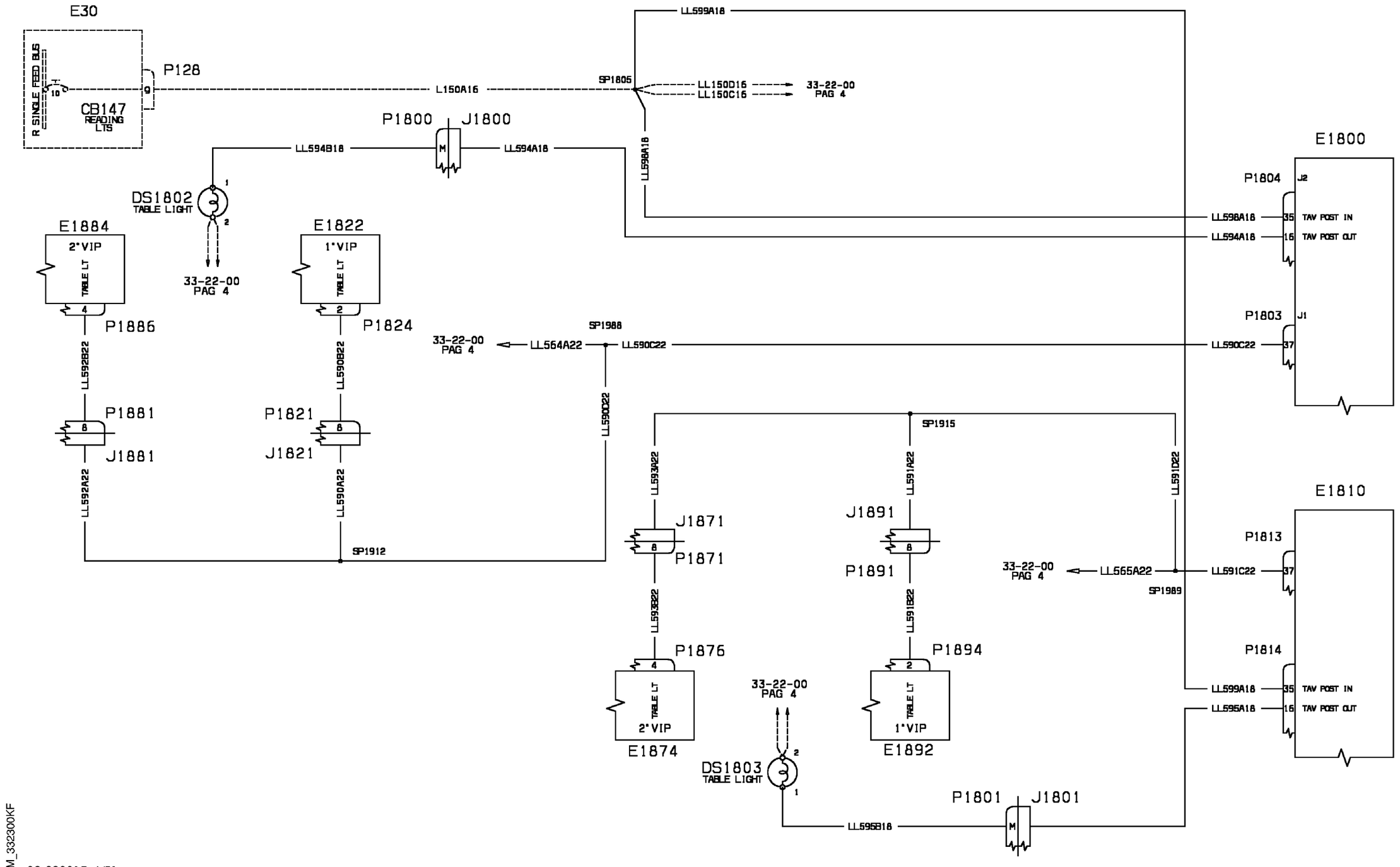


WM_332300KF

80-908317_A/F1

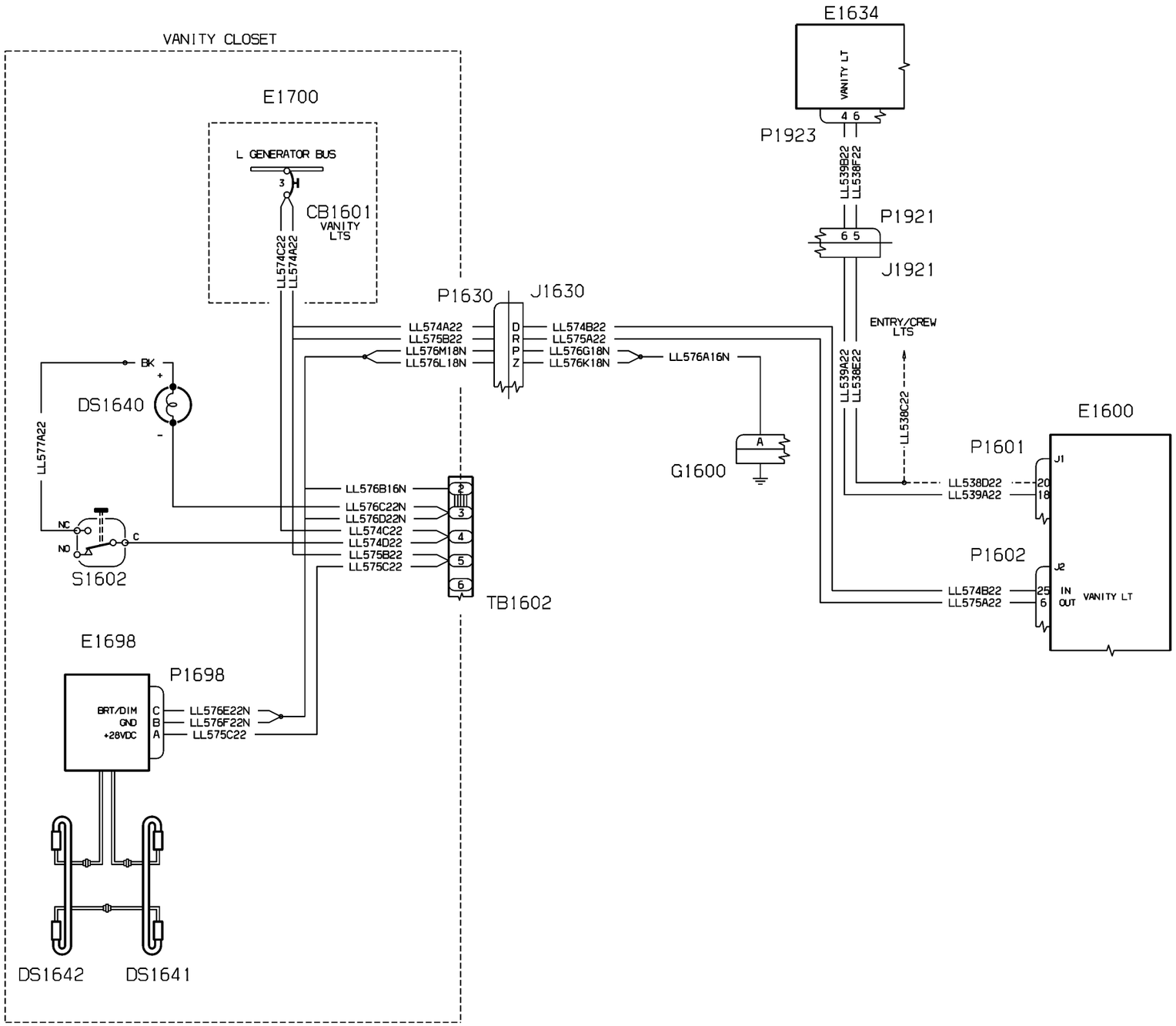


WM_332400_P1_S1

80-908005_B/F1

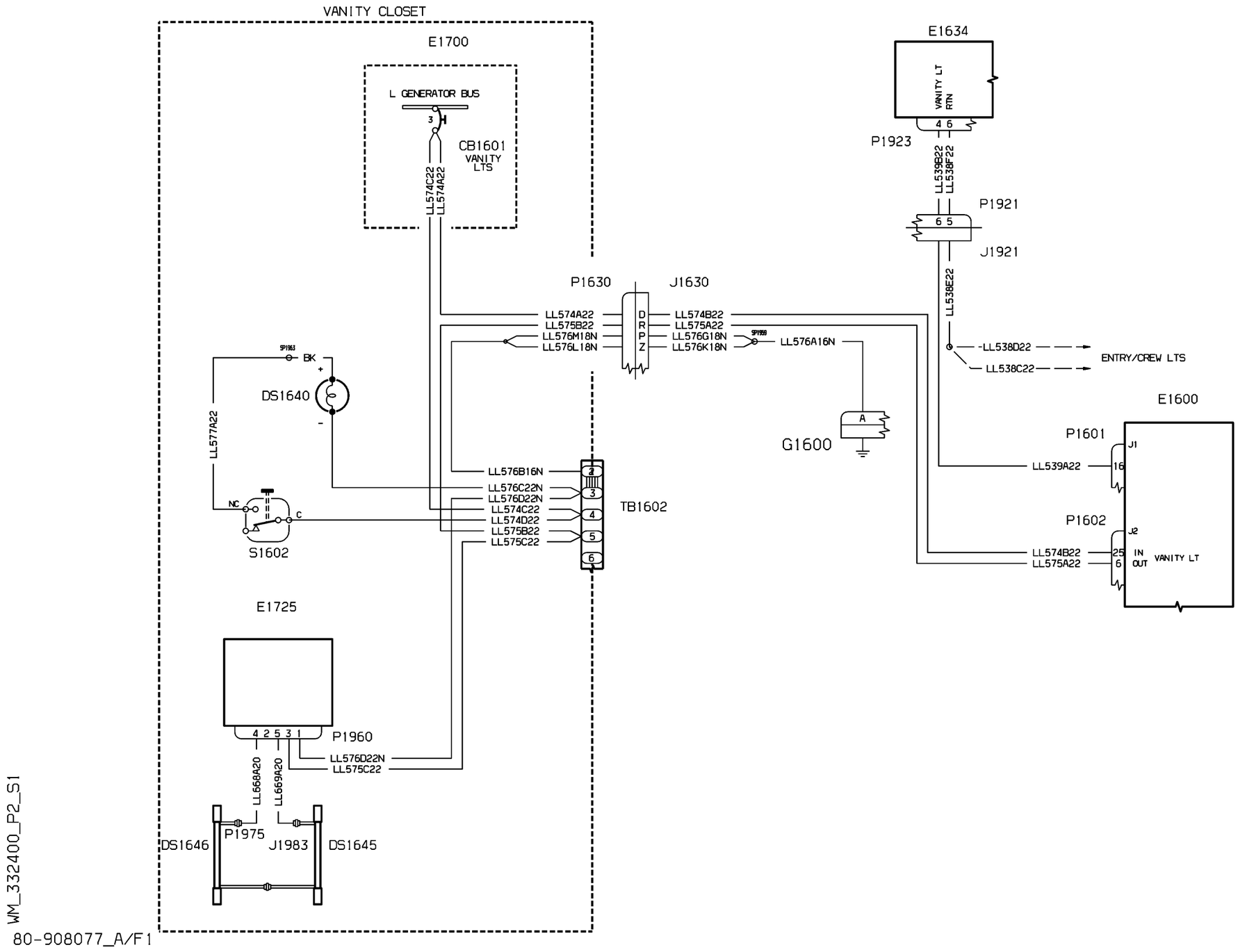


WM_332400_P2_S1

80-908077_A/F1

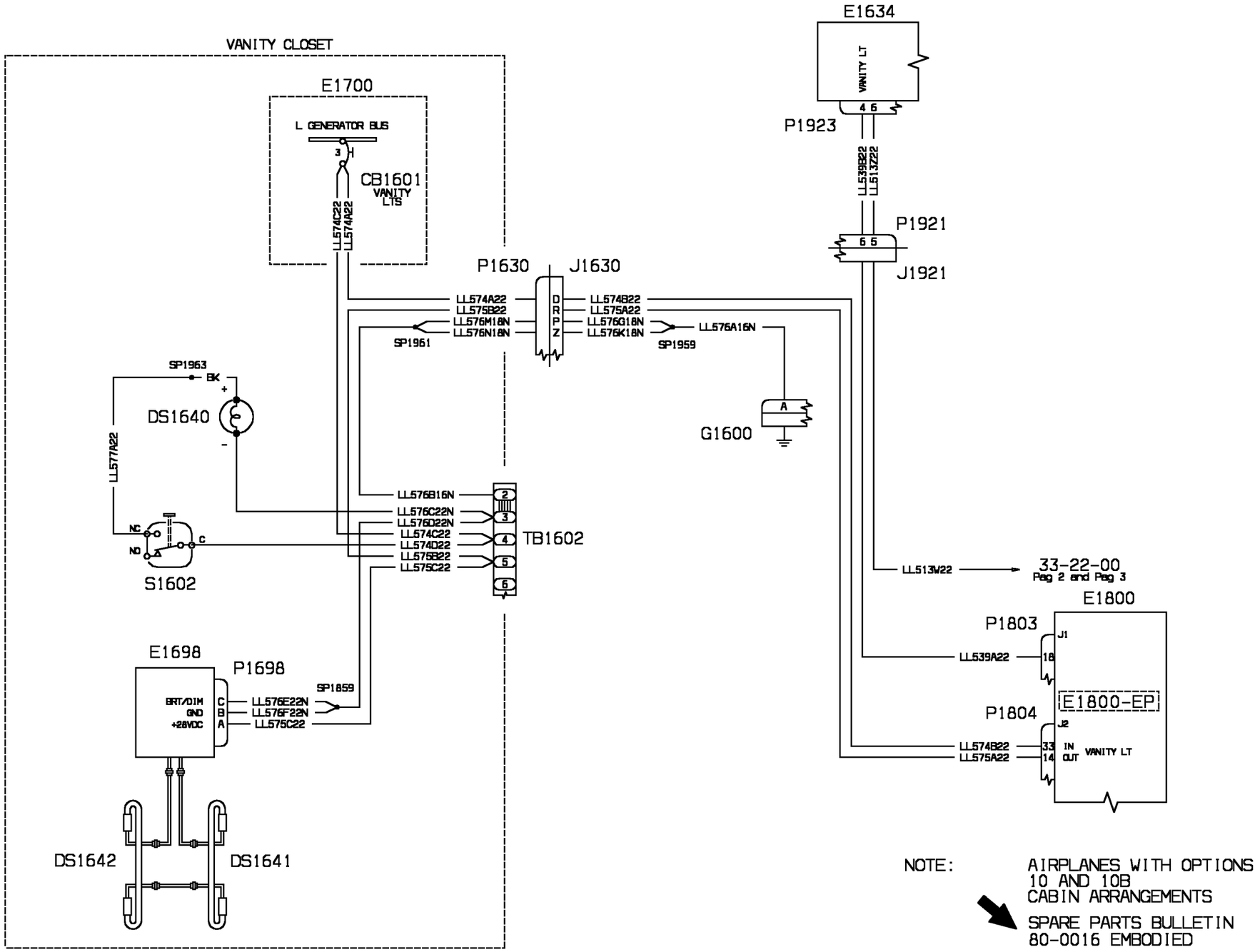


NOTE: AIRPLANES WITH OPTIONS 10 AND 10B CABIN ARRANGEMENTS

SPARE PARTS BULLETIN 80-0016 EMBODIED

WM_332400KD

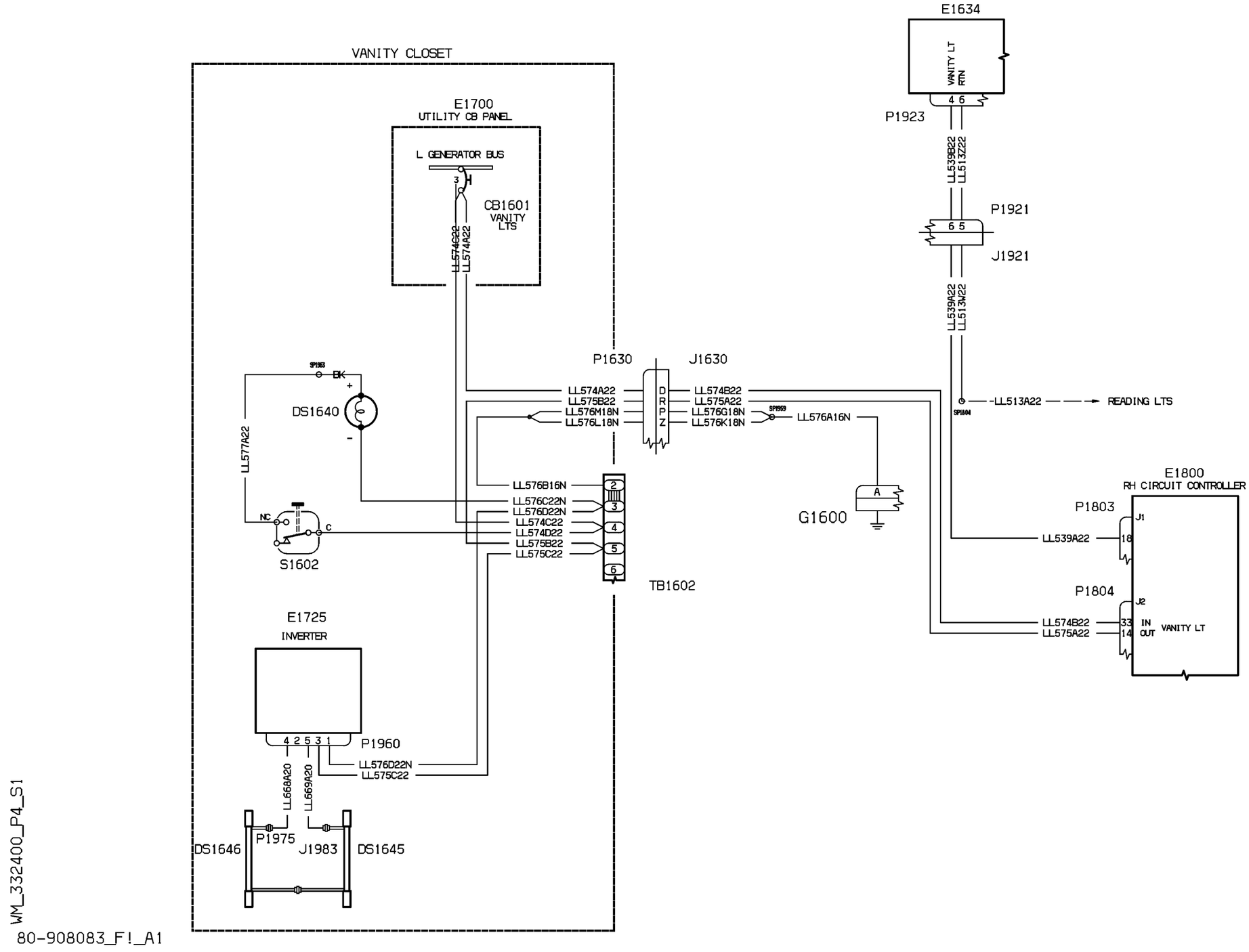
VANITY CLOSET
E1700
UTILITY CB PANEL
L GENERATOR BUS
3
CB1601
VANITY LTS
LL574G22
LL574A22
E1634
VANITY LT RTN
4 6
P1923
LL539B22
LL513Z22
P1921
6 5
J1921
LL539A22
LL513M22
-LL513A22
READING LTS
SP1504
P1630
J1630
LL574A22
LL575B22
LL576M18N
LL576L18N
D
R
P
Z
LL574B22
LL575A22
LL576G18N
LL576K18N
SP1503
LL576A16N
SP1563
BK
+
DS1640
-
LL577A22
NC
C
S1602
LL576B16N
LL576C22N
LL576D22N
LL574C22
LL574D22
LL575B22
LL575C22
2
3
4
5
6
TB1602
G1600
A
E1800
RH CIRCUIT CONTROLLER
P1803
J1
LL539A22
18
P1804
J2
LL574B22
LL575A22
33
14
IN
OUT
VANITY LT
E1725
INVERTER
4 2 5 3 1
P1960
LL576D22N
LL575C22
LL668A20
LL669A20
P1975
J1983
DS1646
DS1645
WM_332400_P4_S1
80-908083_F!_A1

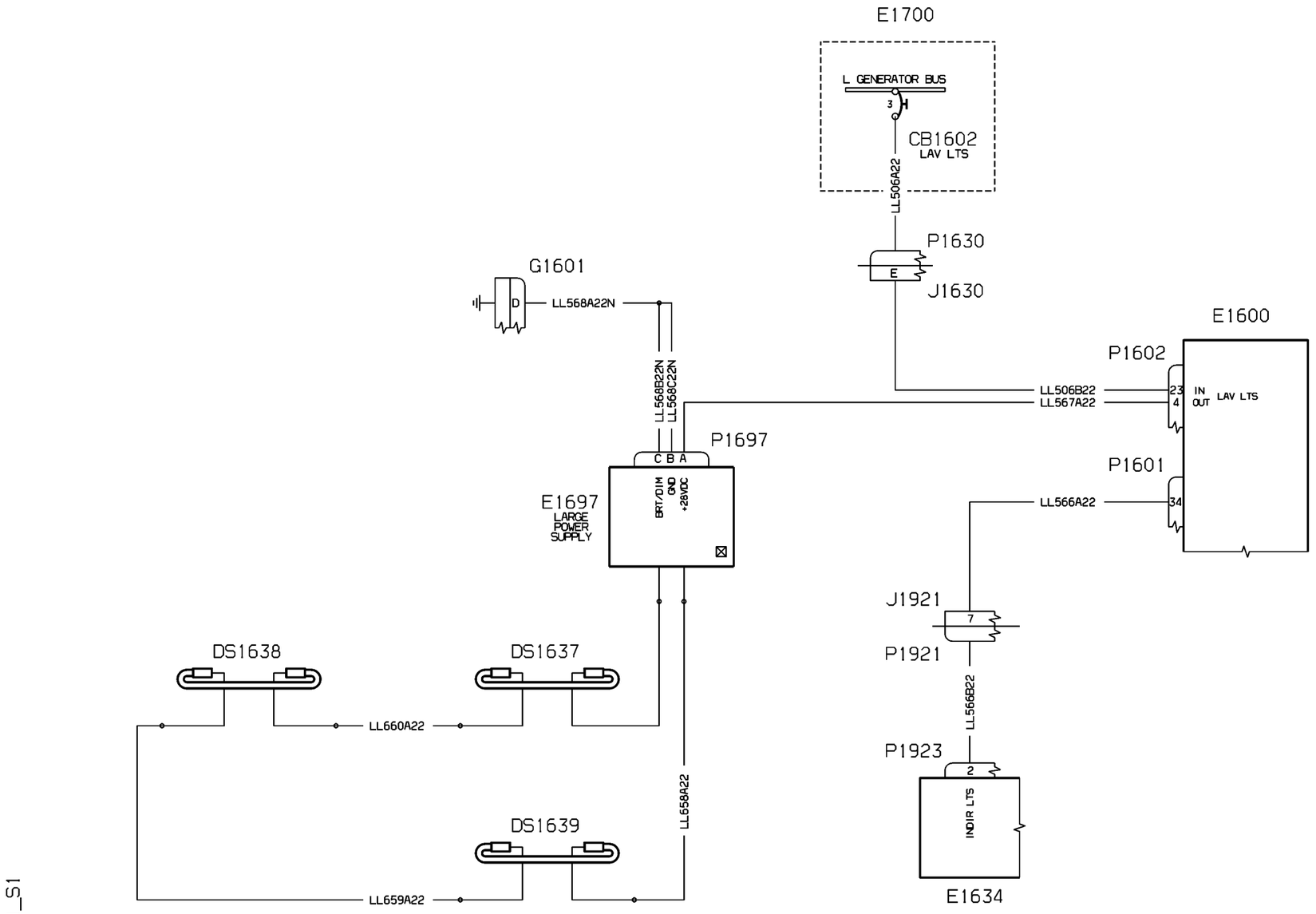


WM_332500_P1_S1

80-908006_B/F1

Note: S/N 1035/1045 embodied option 2

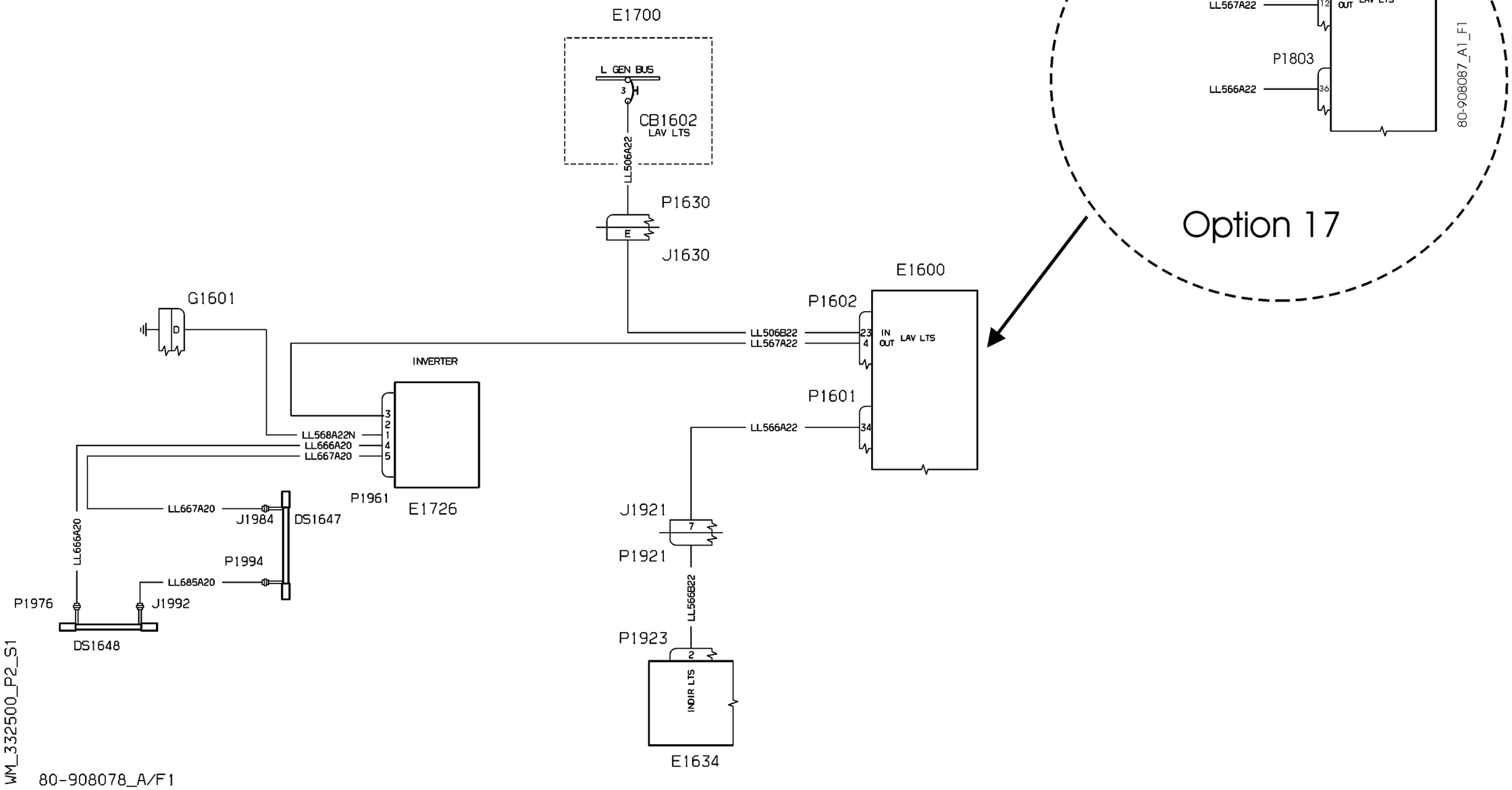

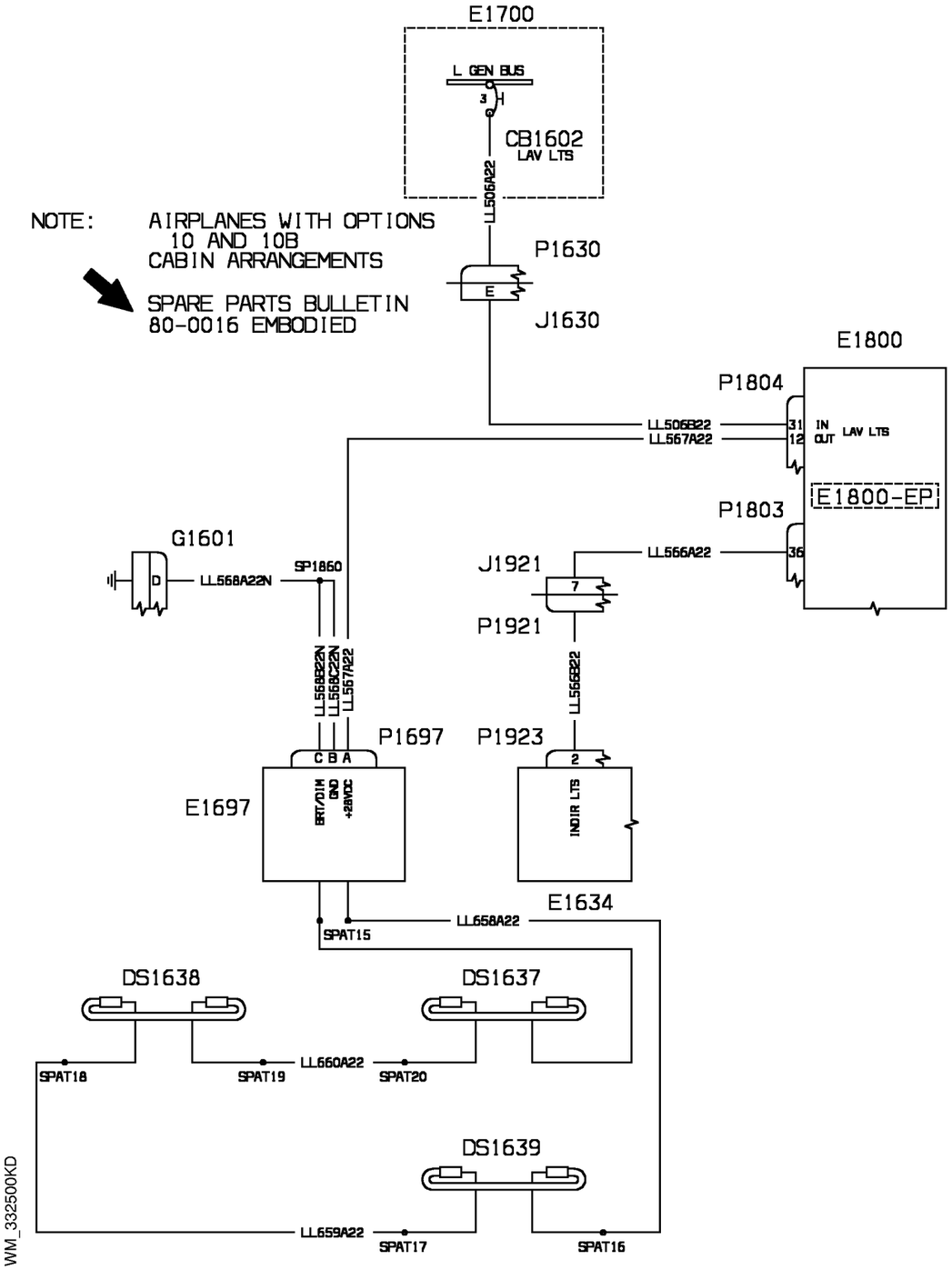


| EFFECTIVITY: 1023-1032 | PASSENGER COMPARTMENT<br>Lavatory Lights (Optional) |
|---|---|

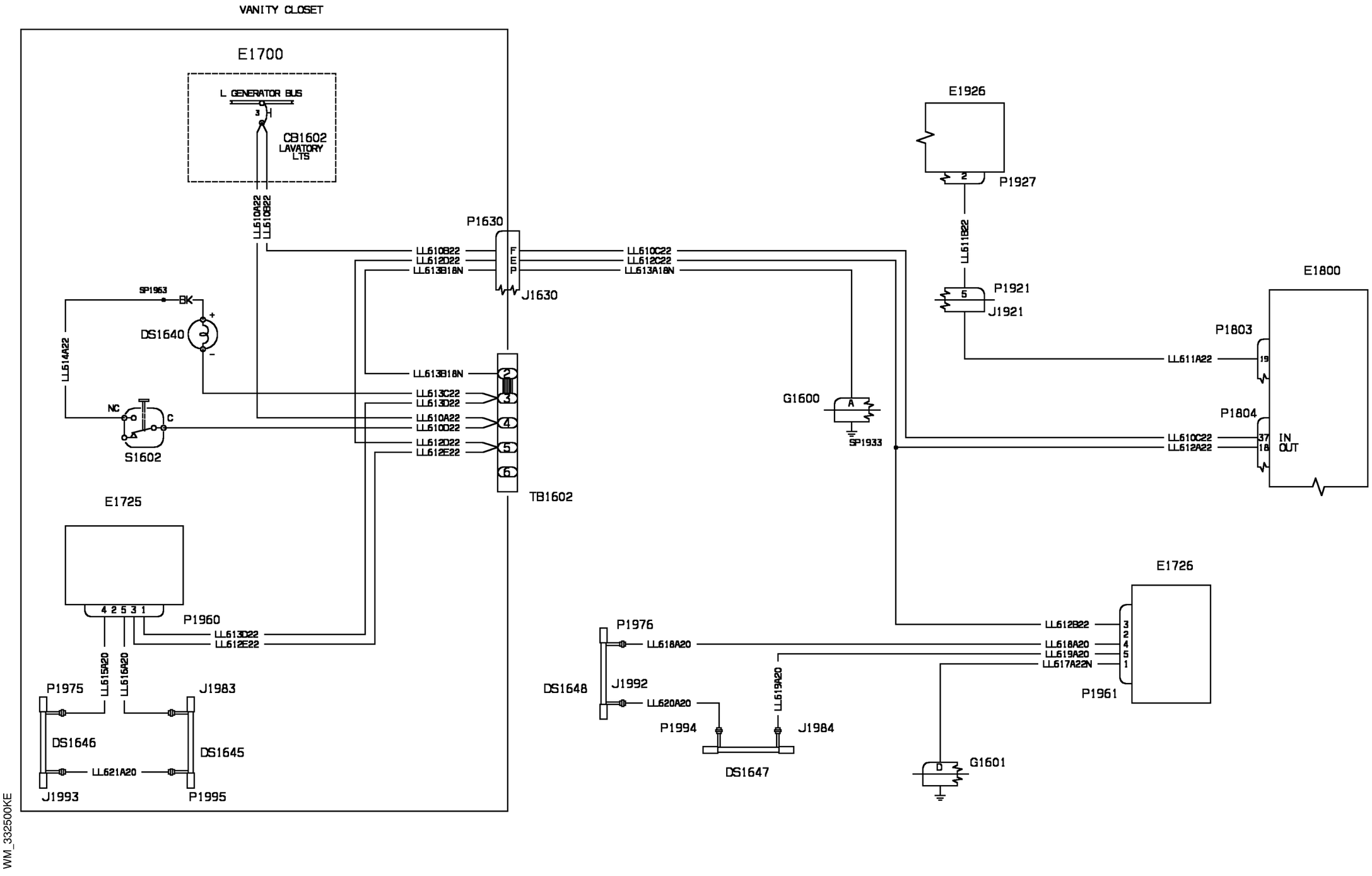
VANITY CLOSET
E1700
L GENERATOR BUS
3
H
CB1602
LAVATORY LTS
LL610A22
LL610B22
P1630
LL610B22
LL612D22
LL613B18N
F
E
P
J1630
LL610C22
LL612C22
LL613A18N
E1926
2
P1927
LL611B22
P1921
5
J1921
E1800
P1803
LL611A22
19
SP1963
BK
DS1640
LL614A22
NC
C
S1602
LL613B18N
LL613C22
LL613D22
LL610A22
LL610D22
LL612D22
LL612E22
2
3
4
5
6
TB1602
G1600
A
SP1933
P1804
LL610C22
LL612A22
37
18
IN
OUT
E1725
4 2 5 3 1
P1960
LL613D22
LL612E22
LL615A20
LL616A20
P1975
J1983
DS1646
DS1645
LL621A20
J1993
P1995
E1726
LL612B22
LL618A20
LL619A20
LL617A22N
3
2
4
5
1
P1961
P1976
LL618A20
DS1648
J1992
LL620A20
LL619A20
P1994
J1984
DS1647
G1601
WM_332500KE

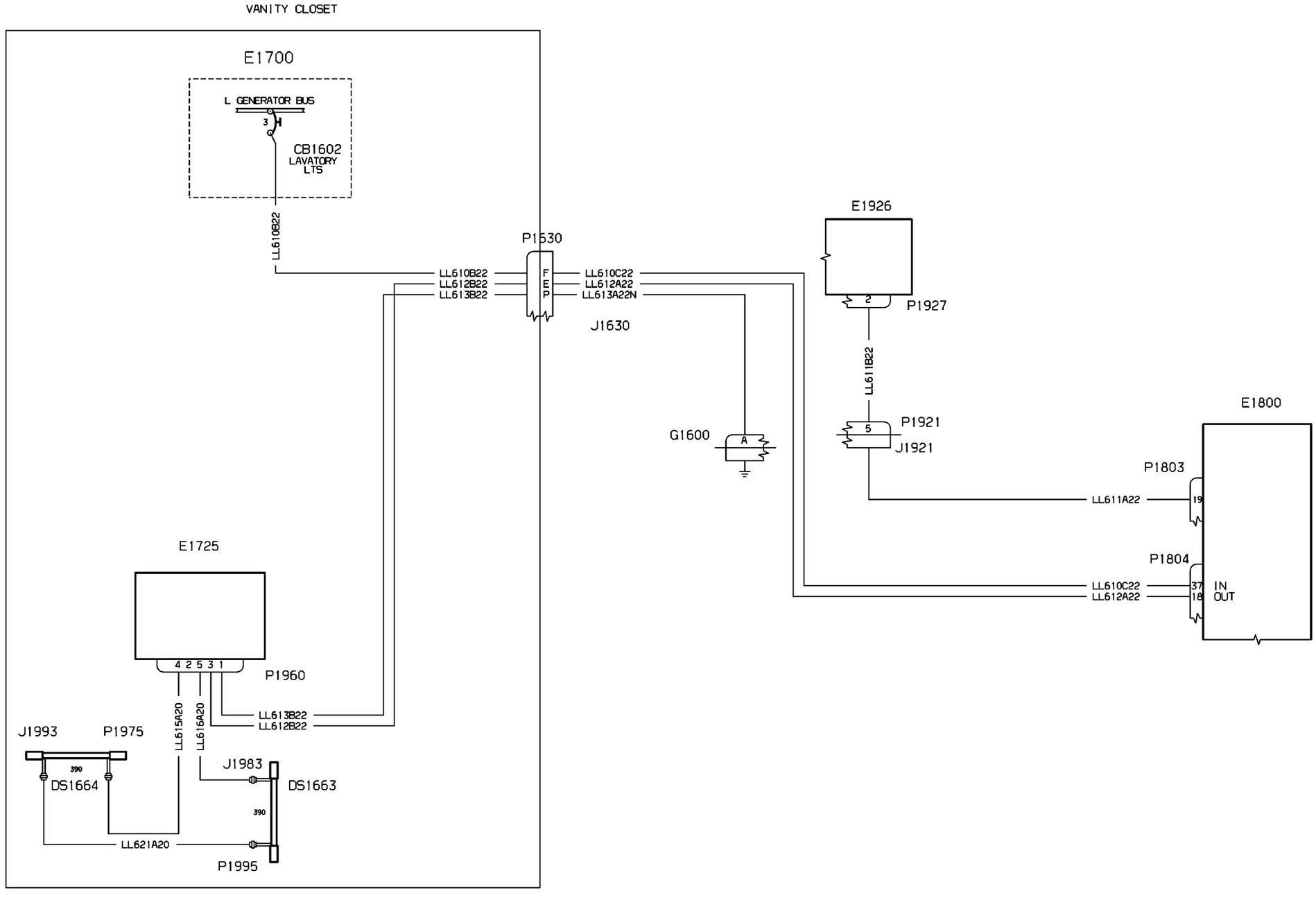
VANITY CLOSET
E1700
L GENERATOR BUS
3
CB1602
LAVATORY
LTS
LL610B22
P1630
LL610B22
LL612B22
LL613B22
F
E
P
LL610C22
LL612A22
LL613A22N
J1630
E1926
2
P1927
LL611B22
P1921
5
J1921
G1600
A
E1800
P1803
LL611A22
19
P1804
LL610C22
LL612A22
37
18
IN
OUT
E1725
4 2 5 3 1
P1960
LL613B22
LL612B22
LL615A20
LL616A20
J1993
P1975
390
DS1664
J1983
DS1663
390
LL621A20
P1995
WM_332500KKC1

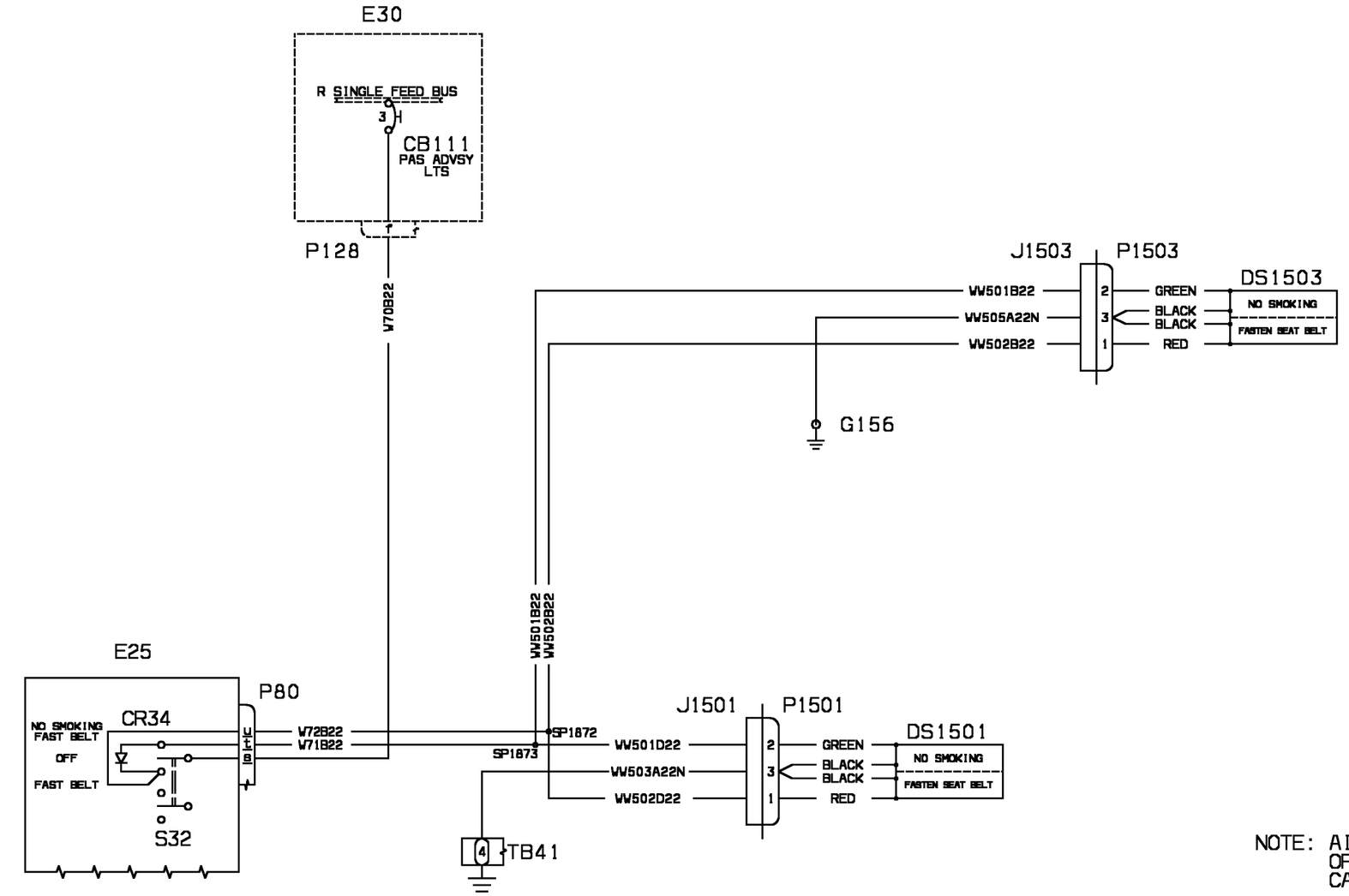


NOTE: AIRPLANES WITH OPTION 5 & 8 CABIN ARRANGEMENT

WM_332600KA

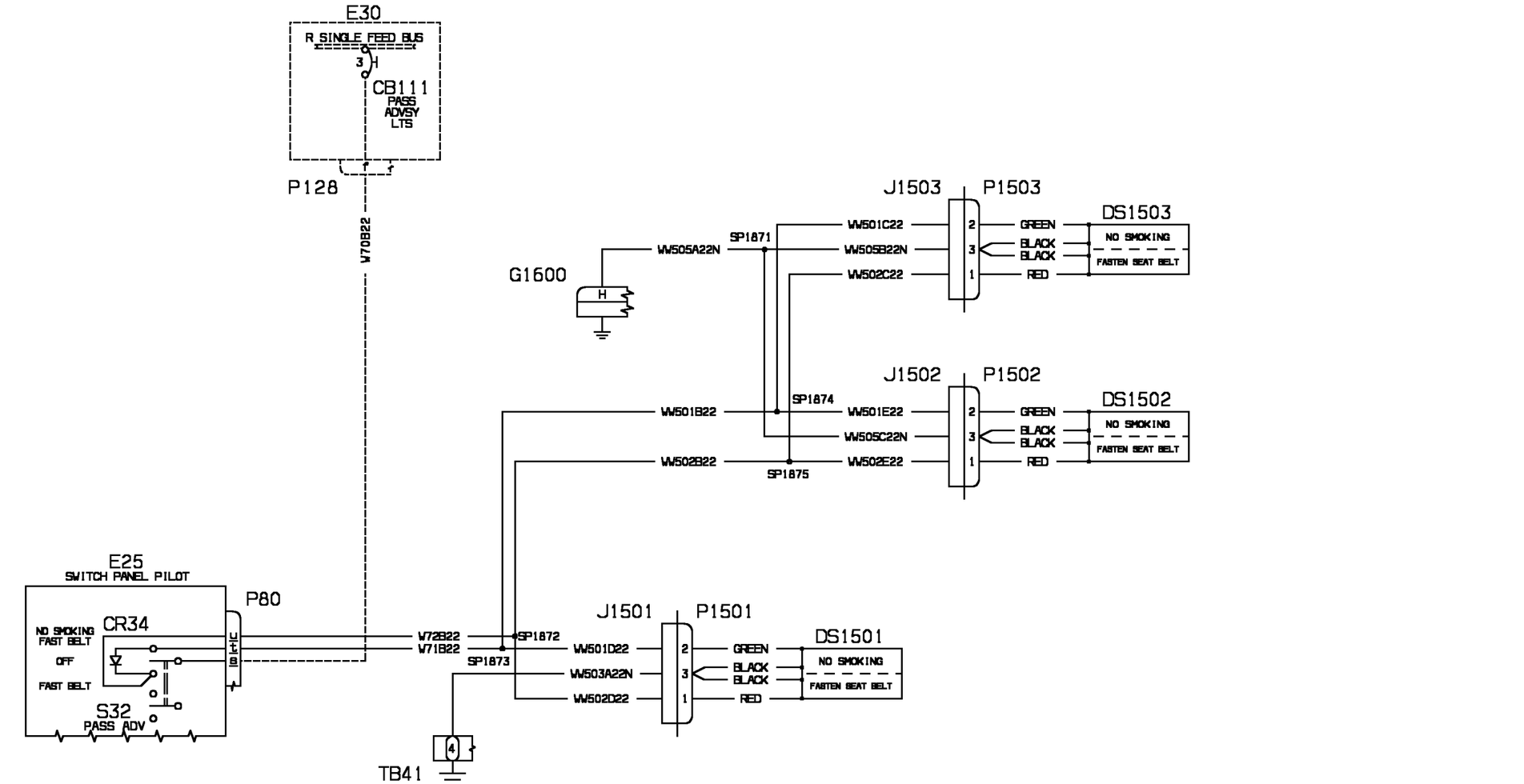


NOTE: AIRPLANES WITH OPTION 10 AND 10B CABIN ARRANGEMENT

WM_332600KD

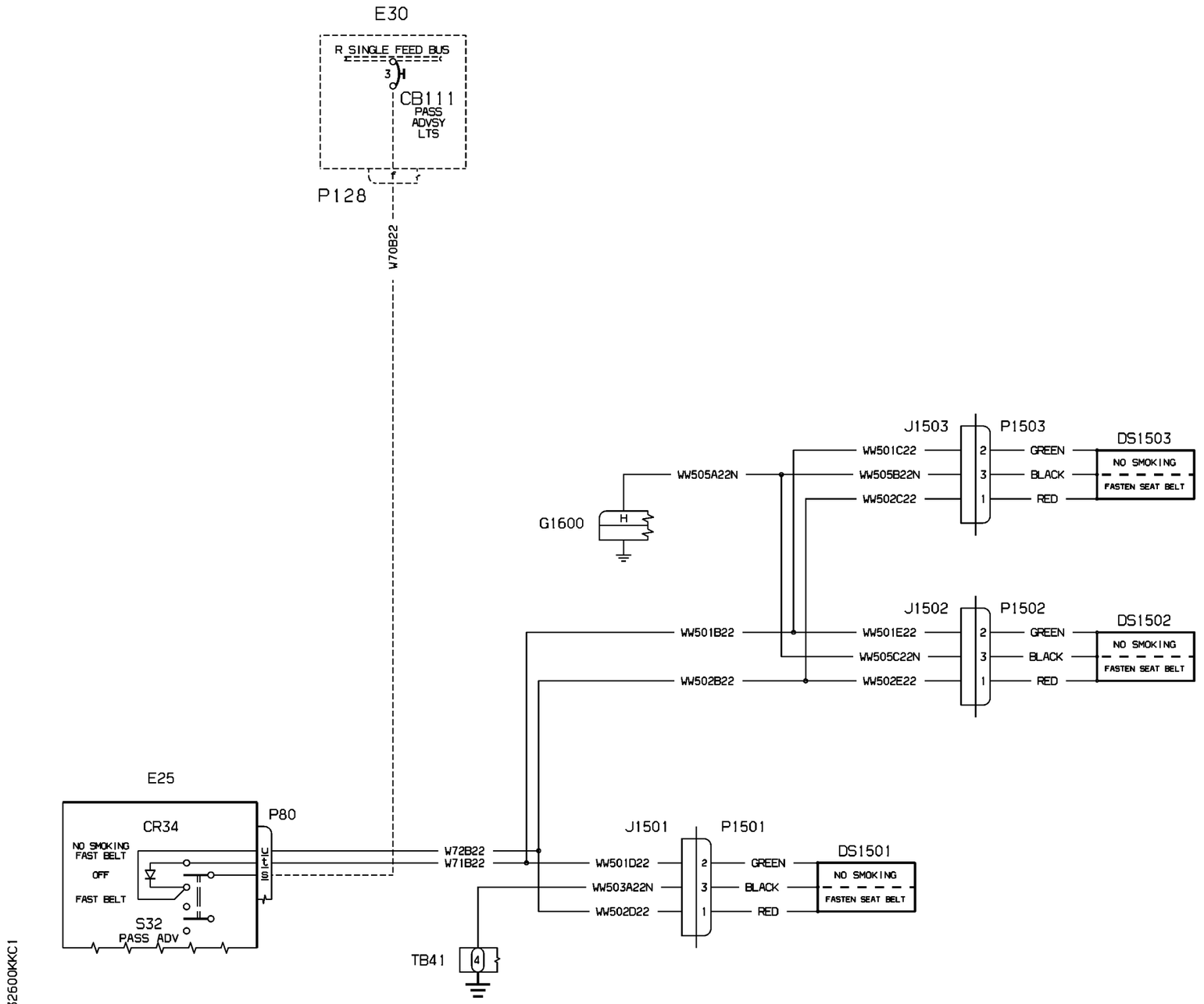
E30
R SINGLE FEED BUS
3
H
CB111
PASS
ADVSY
LTS
P128
W70B22
J1503
P1503
DS1503
WW501C22
WW505A22N
WW505B22N
WW502C22
2
3
1
GREEN
BLACK
RED
NO SMOKING
FASTEN SEAT BELT
G1600
H
J1502
P1502
DS1502
WW501B22
WW501E22
WW505C22N
WW502B22
WW502E22
E25
P80
CR34
NO SMOKING
FAST BELT
OFF
FAST BELT
S32
PASS ADV
W72B22
W71B22
J1501
P1501
DS1501
WW501D22
WW503A22N
WW502D22
TB41
4
WM_332600KKC1

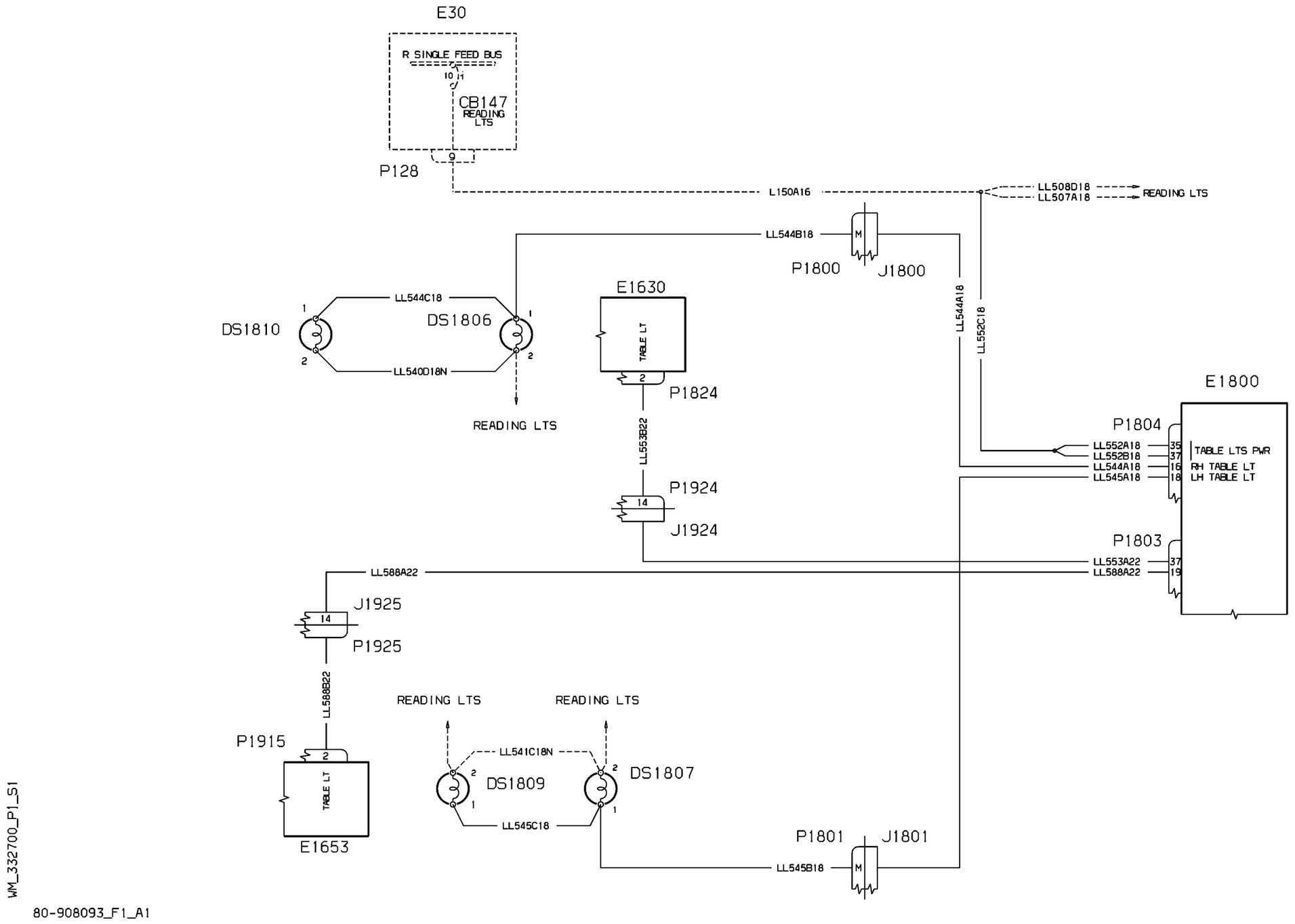
E30
R SINGLE FEED BUS
10 H1
CB147
READING LTS
9
P128
L150A16
LL508D18
LL507A18
READING LTS
LL544B18
M
P1800
J1800
LL544A18
LL552C18
E1630
TABLE LT
2
P1824
LL544C18
DS1810
DS1806
1
2
LL540D18N
READING LTS
LL553B22
P1924
14
J1924
E1800
P1804
LL552A18 35
LL552B18 37
LL544A18 16
LL545A18 18
TABLE LTS PWR
RH TABLE LT
LH TABLE LT
P1803
LL553A22 37
LL588A22 19
LL588A22
J1925
14
P1925
LL588B22
P1915
2
TABLE LT
E1653
READING LTS
READING LTS
LL541C18N
DS1809
DS1807
LL545C18
P1801
J1801
LL545B18
M
WM_332700_P1_S1
80-908093_F1_A1

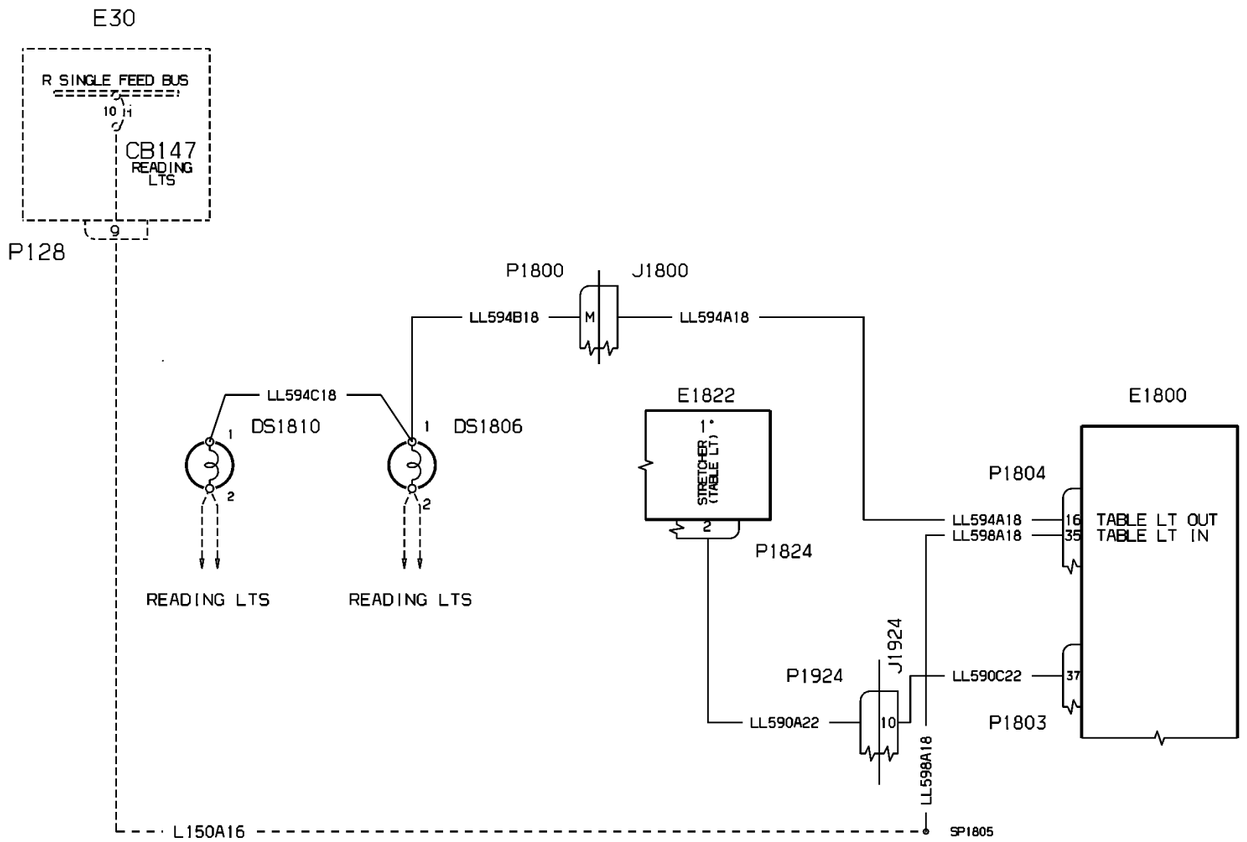


WM_332700_P2_S1

80-908341_A

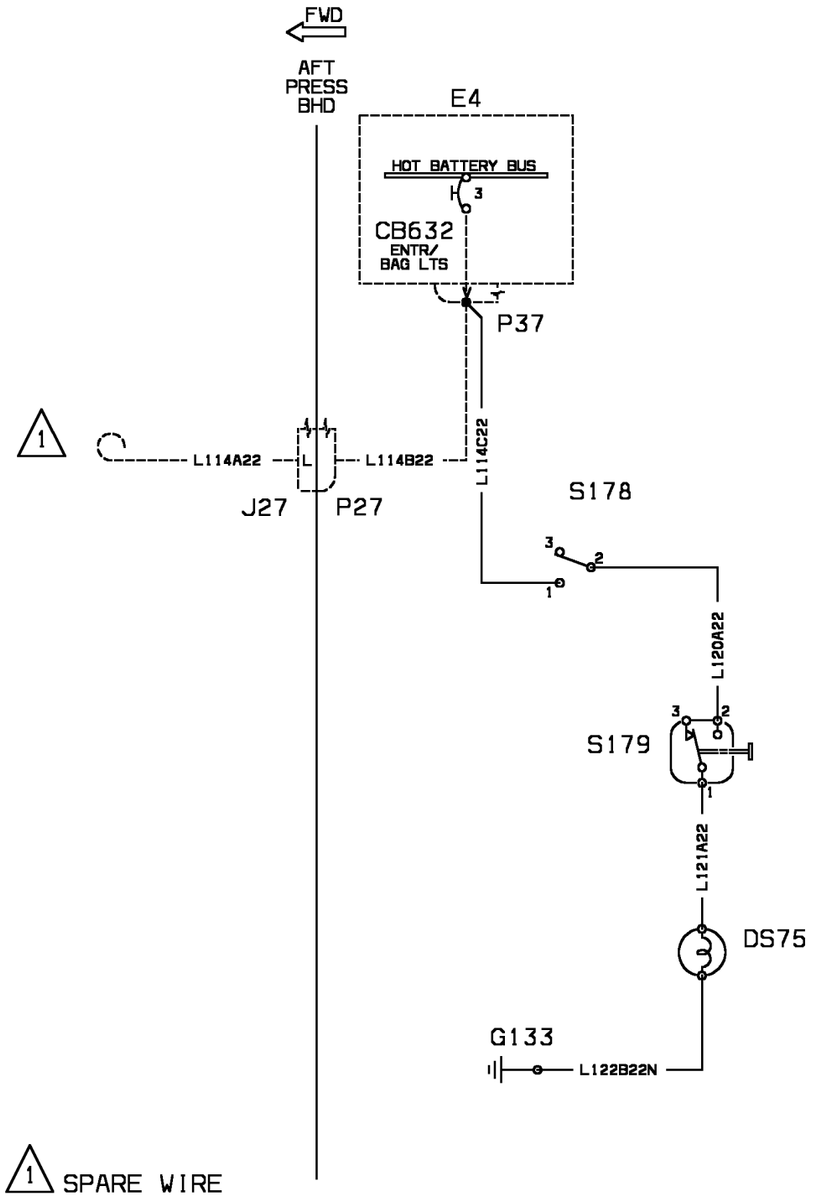
FWD
AFT PRESS BHD
E4
HOT BATTERY BUS
3
CB632
ENTR/ BAG LTS
1
P37
L114C22
1
L114A22
L
L114B22
J27
P27
S178
3
2
1
L120A22
S179
3
2
1
L121A22
DS75
G133
L122B22N
1 SPARE WIRE
WM_33310OKK

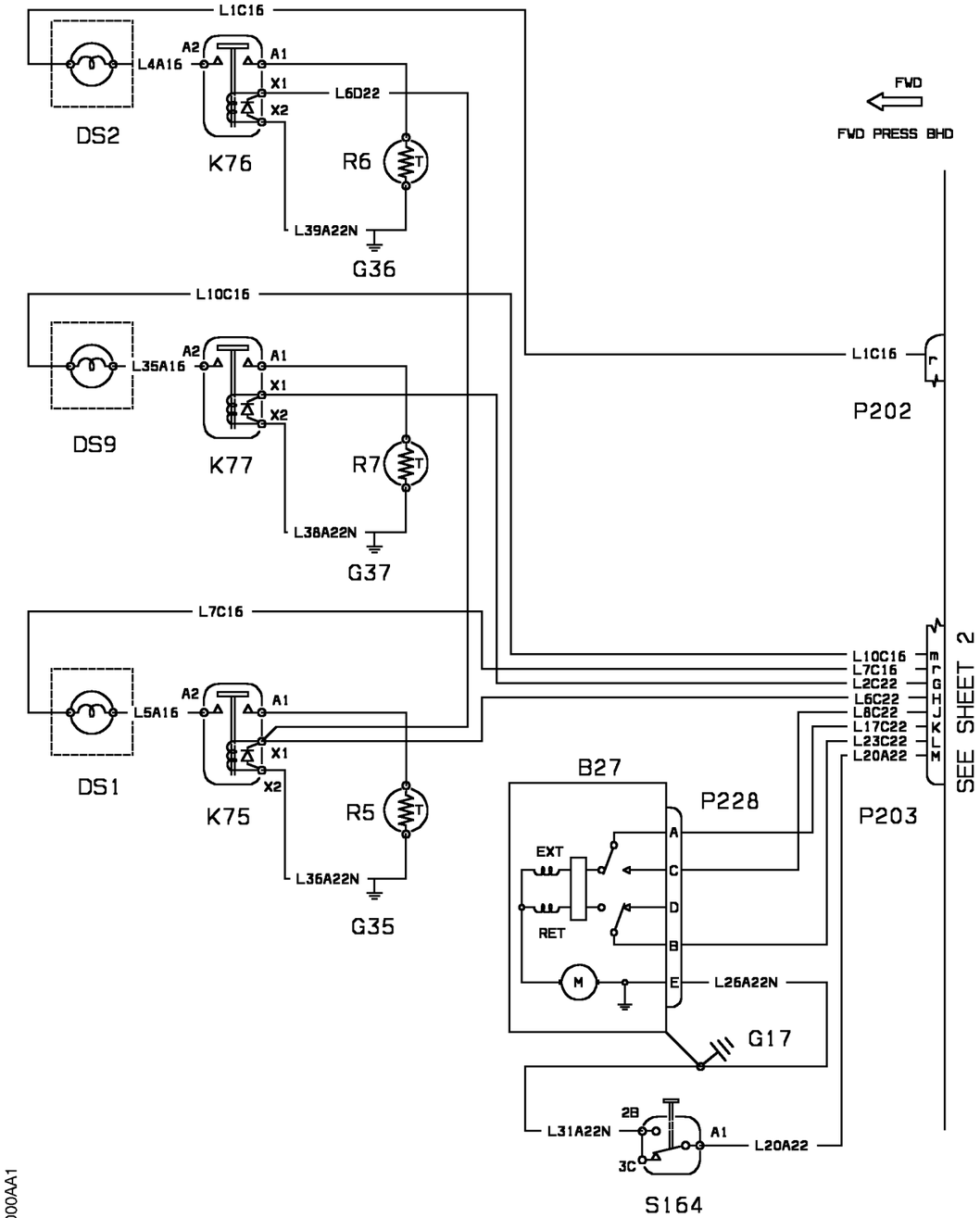


WM_334000AA1

| EFFECTIVITY: | EXTERIOR<br>External Lights |
|---|---|

**33-40-00**

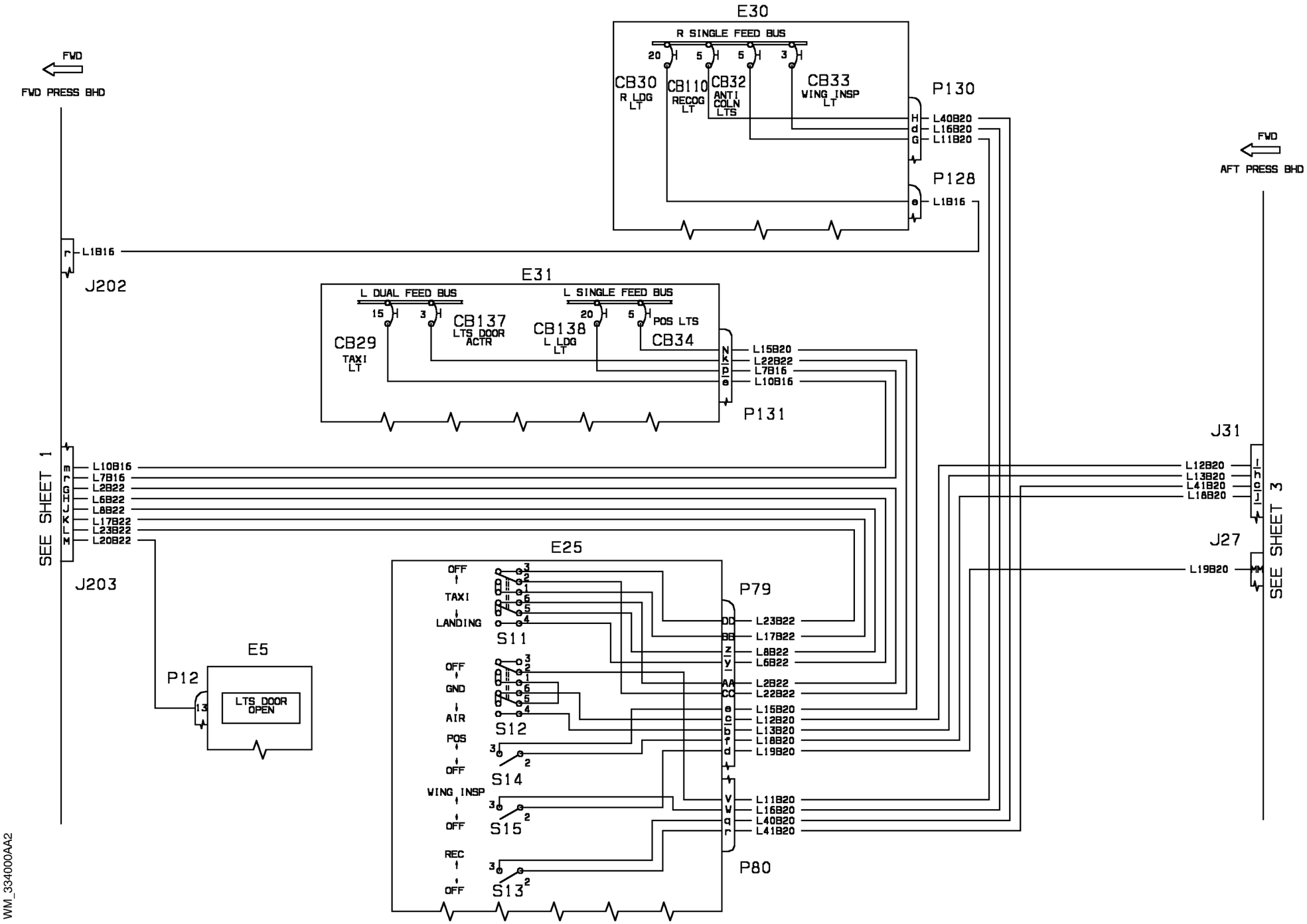


WM_334000AA2

| EFFECTIVITY: | EXTERIOR<br>External Lights |
|---|---|

**33-40-00**

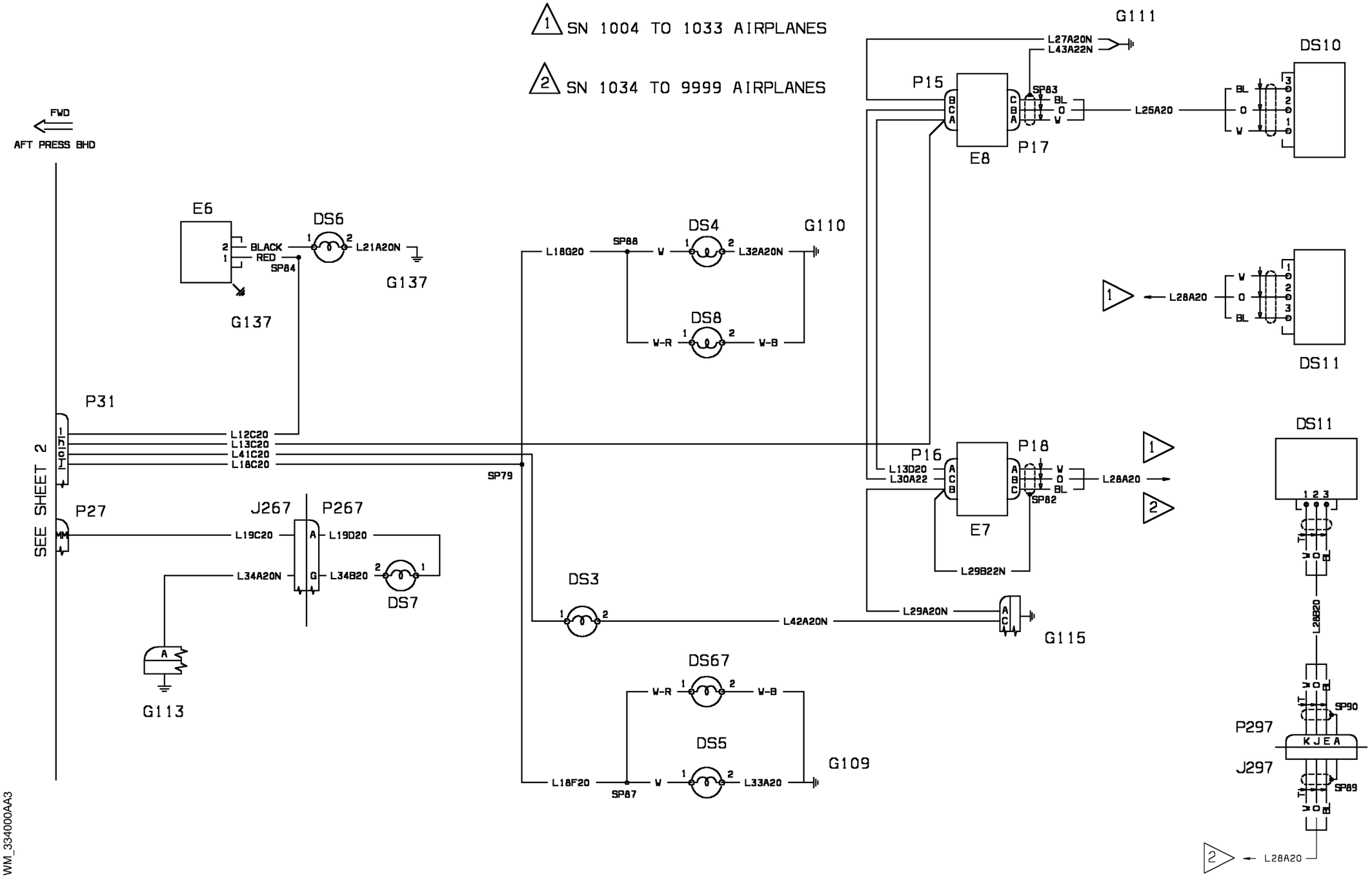


| EFFECTIVITY: | EXTERIOR<br>External Lights |
|---|---|

**33-40-00**

# *PIAGGIO P.180 AVANTI*
# *WIRING MANUAL*

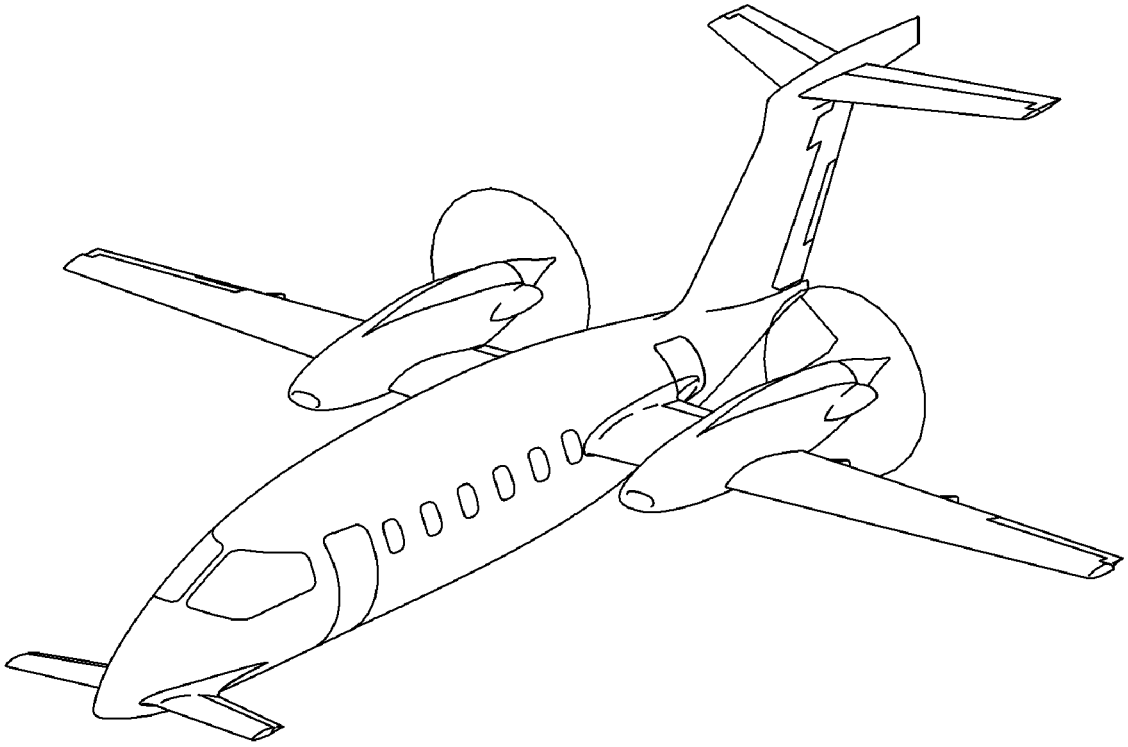

# VOLUME 3
**Chapter 34 thru Chapter 93**

Report No. 9067

Issue No. E0
Issue Date: Oct. 30/09

Revision No: E3
Revision Date: Mar. 19/12

PIAGGIO AERO INDUSTRIES S.p.A
VIA CIBRARIO, 4
16154 GENOVA
ITALY

INTENTIONALLY LEFT BLANK

CHAPTER 34 - NAVIGATION
LIST OF EFFECTIVE PAGES

| CHAPTER SECTION SUBJECT | PAGE | SHEET | DATE |
|---|---|---|---|
| 34 - LOEP | 1 | | Mar. 19/12 |
| | 2 | | Mar. 19/12 |
| | 3 | | Mar. 19/12 |
| | 4 | | Mar. 19/12 |
| 34 - TOC | 1 | | Mar. 19/12 |
| | 2 | | Mar. 19/12 |
| | 3 | | Mar. 19/12 |
| | 4 | | Mar. 19/12 |
| 34-10-00 | 1 | 1 | Oct. 30/09 |
| 34-10-00 | 1 | 2 | Oct. 30/09 |
| 34-10-00 | 1 | 3 | Oct. 30/09 |
| 34-10-00 | 2 | 1 | Oct. 30/09 |
| 34-10-00 | 2 | 2 | Oct. 30/09 |
| 34-10-00 | 2 | 3 | Oct. 30/09 |
| 34-10-00 | 3 | 1 | June 30/10 |
| 34-10-00 | 3 | 2 | June 30/10 |
| 34-10-00 | 3 | 3 | June 30/10 |
| 34-10-00 | 4 | 1 | June 30/10 |
| 34-10-00 | 4 | 2 | June 30/10 |
| 34-10-00 | 4 | 3 | June 30/10 |
| 34-10-10 | 1 | | Oct. 30/09 |
| 34-11-00 | 1 | | Oct. 30/09 |
| 34-12-00 | 1 | 1 | Oct. 30/09 |
| 34-12-00 | 1 | 2 | Oct. 30/09 |
| 34-12-00 | 2 | 1 | Oct. 30/09 |
| 34-12-00 | 2 | 2 | Oct. 30/09 |
| 34-12-10 | 1 | | Oct. 30/09 |
| 34-13-00 | 1 | | Oct. 30/09 |
| 34-21-00 | 1 | 1 | Oct. 30/09 |
| 34-21-00 | 1 | 2 | Oct. 30/09 |
| 34-22-00 | 1 | 1 | June 30/11 |
| 34-22-00 | 1 | 2 | Oct. 30/09 |
| 34-23-00 | 1 | 1 | Oct. 30/09 |
| 34-23-00 | 1 | 2 | Oct. 30/09 |
| 34-23-00 | 1 | 3 | Oct. 30/09 |
| 34-23-00 | 1 | 4 | Oct. 30/09 |

*Continued on the next page*

| CHAPTER SECTION SUBJECT | PAGE | SHEET | DATE |
|---|---|---|---|
| 34-23-00 | 2 | 1 | Oct. 30/09 |
| 34-23-00 | 2 | 2 | Oct. 30/09 |
| 34-23-00 | 2 | 3 | Oct. 30/09 |
| 34-23-00 | 2 | 4 | Oct. 30/09 |
| 34-23-00 | 3 | 1 | Oct. 30/09 |
| 34-23-00 | 3 | 2 | Oct. 30/09 |
| 34-23-00 | 3 | 3 | Oct. 30/09 |
| 34-23-00 | 3 | 4 | Oct. 30/09 |
| 34-23-00 | 4 | 1 | Oct. 30/09 |
| 34-23-00 | 4 | 2 | Oct. 30/09 |
| 34-23-00 | 4 | 3 | Oct. 30/09 |
| 34-23-00 | 4 | 4 | Oct. 30/09 |
| 34-24-00 | 1 | 1 | Oct. 30/09 |
| 34-24-00 | 1 | 2 | Oct. 30/09 |
| 34-24-00 | 1 | 3 | Oct. 30/09 |
| 34-24-00 | 1 | 4 | Oct. 30/09 |
| 34-25-00 | 1 | | Oct. 30/09 |
| 34-25-00 | 2 | | Oct. 30/09 |
| 34-25-00 | 3 | | Oct. 30/09 |
| 34-27-00 | 1 | | Oct. 30/09 |
| 34-27-00 | 2 | | Oct. 30/09 |
| 34-27-00 | 3 | | Oct. 30/09 |
| 34-27-00 | 4 | | Oct. 30/09 |
| 34-28-00 | 1 | 1 | Oct. 30/09 |
| 34-28-00 | 1 | 2 | Oct. 30/09 |
| 34-28-00 | 1 | 3 | Oct. 30/09 |
| 34-41-00 | 1 | | Oct. 30/09 |
| 34-42-00 | 1 | | Oct. 30/09 |
| 34-42-00 | 2 | | June 30/10 |
| 34-43-00 | 1 | 1 | Oct. 30/09 |
| 34-43-00 | 1 | 2 | Oct. 30/09 |
| 34-43-00 | 1 | 3 | Oct. 30/09 |
| 34-43-00 | 2 | 1 | June 30/10 |
| 34-43-00 | 2 | 2 | Mar. 19/12 |
| 34-43-00 | 2 | 3 | June 30/10 |
| 34-44-00 | 1 | 1 | Oct. 30/09 |
| 34-44-00 | 1 | 2 | Oct. 30/09 |
| 34-44-00 | 1 | 3 | Oct. 30/09 |
| 34-44-00 | 1 | 4 | Oct. 30/09 |
| 34-45-00 | 1 | | Mar. 19/12 |
| 34-51-00 | 1 | 1 | Oct. 30/09 |

*Continued on the next page*

| CHAPTER SECTION SUBJECT | PAGE | SHEET | DATE |
|---|---|---|---|
| 34-51-00 | 1 | 2 | Oct. 30/09 |
| 34-51-00 | 1 | 3 | Oct. 30/09 |
| 34-51-10 | 1 | | Oct. 30/09 |
| 34-52-00 | 1 | | Oct. 30/09 |
| 34-53-00 | 1 | | Oct. 30/09 |
| 34-53-00 | 2 | | Oct. 30/09 |
| 34-54-00 | 1 | 1 | June 30/10 |
| 34-54-00 | 1 | 2 | June 30/10 |
| 34-54-10 | 1 | | Oct. 30/09 |
| 34-54-20 | 1 | 1 | Oct. 30/09 |
| 34-54-20 | 1 | 2 | Oct. 30/09 |
| 34-54-21 | 1 | 1 | Oct. 30/09 |
| 34-54-21 | 1 | 2 | Oct. 30/09 |
| 34-54-21 | 1 | 3 | Mar. 19/12 |
| 34-54-21 | 1 | 4 | Oct. 30/09 |
| 34-54-21 | 1 | 5 | Oct. 30/09 |
| 34-54-21 | 2 | | Oct. 30/09 |
| 34-54-21 | 3 | 1 | Oct. 30/09 |
| 34-54-21 | 3 | 2 | Oct. 30/09 |
| 34-54-21 | 4 | 1 | Oct. 30/09 |
| 34-54-21 | 4 | 2 | Oct. 30/09 |
| 34-54-30 | 1 | 1 | June 30/10 |
| 34-54-30 | 1 | 2 | June 30/10 |
| 34-54-40 | 1 | 1 | June 30/10 |
| 34-54-40 | 1 | 2 | June 30/10 |
| 34-54-40 | 1 | 3 | June 30/10 |
| 34-55-00 | 1 | 1 | Oct. 30/09 |
| 34-55-00 | 1 | 2 | Oct. 30/09 |
| 34-56-00 | 1 | 1 | Oct. 30/09 |
| 34-56-00 | 1 | 2 | Oct. 30/09 |
| 34-56-00 | 1 | 3 | Oct. 30/09 |
| 34-56-00 | 1 | 4 | Oct. 30/09 |
| 34-56-00 | 2 | 1 | Oct. 30/09 |
| 34-56-00 | 2 | 2 | Oct. 30/09 |
| 34-56-00 | 2 | 3 | Oct. 30/09 |
| 34-56-00 | 2 | 4 | Oct. 30/09 |
| 34-56-10 | 1 | | June 30/10 |
| 34-56-20 | 1 | | Oct. 30/09 |
| 34-57-00 | 1 | | Oct. 30/09 |
| 34-58-10 | 1 | | Oct. 30/09 |
| 34-59-10 | 1 | 1 | Oct. 30/09 |

*Continued on the next page*

| CHAPTER SECTION SUBJECT | PAGE | SHEET | DATE |
|---|---|---|---|
| 34-59-10 | 1 | 2 | Oct. 30/09 |
| 34-59-10 | 1 | 3 | Oct. 30/09 |
| 34-59-10 | 1 | 4 | Oct. 30/09 |
| 34-59-20 | 1 | 1 | Oct. 30/09 |
| 34-59-20 | 1 | 2 | Oct. 30/09 |
| 34-59-20 | 1 | 3 | Oct. 30/09 |
| 34-59-20 | 1 | 4 | Oct. 30/09 |
| 34-59-30 | 1 | 1 | Oct. 30/09 |
| 34-59-30 | 1 | 2 | Oct. 30/09 |
| 34-59-30 | 1 | 3 | Oct. 30/09 |
| 34-59-30 | 1 | 4 | Oct. 30/09 |
| 34-59-40 | 1 | 1 | Oct. 30/09 |
| 34-59-40 | 1 | 2 | Oct. 30/09 |
| 34-59-40 | 1 | 3 | Oct. 30/09 |
| 34-59-40 | 1 | 4 | Oct. 30/09 |
| 34-59-41 | 1 | | Oct. 30/09 |
| 34-59-60 | 1 | 1 | Oct. 30/09 |
| 34-59-60 | 1 | 2 | Oct. 30/09 |
| 34-59-60 | 1 | 3 | Oct. 30/09 |
| 34-59-60 | 1 | 4 | Oct. 30/09 |
| 34-59-70 | 1 | 1 | Oct. 30/09 |
| 34-59-70 | 1 | 2 | Oct. 30/09 |
| 34-59-70 | 1 | 3 | Oct. 30/09 |
| 34-59-70 | 1 | 4 | Oct. 30/09 |
| 34-59-80 | 1 | 1 | June 30/10 |
| 34-59-80 | 1 | 2 | Mar. 19/12 |
| 34-59-80 | 1 | 3 | June 30/10 |
| 34-59-90 | 1 | 1 | Oct. 30/09 |
| 34-59-90 | 1 | 2 | Mar. 19/12 |
| 34-59-90 | 1 | 3 | Oct. 30/09 |

CHAPTER 34 - NAVIGATION
TABLE OF CONTENTS


| SUBJECT | CHAPTER SECTION SUBJECT | PAGE | SHEET |
|---|---|---|---|
| FLIGHT ENVIRONMENT DATA | | | |
| RVSM Provision ( Optional ) | 34-10-00 | 1 | 1 |
| RVSM Provision ( Optional ) | 34-10-00 | 1 | 2 |
| RVSM Provision ( Optional ) | 34-10-00 | 1 | 3 |
| RVSM KIT ( Optional ) | 34-10-00 | 2 | 1 |
| RVSM KIT ( Optional ) | 34-10-00 | 2 | 2 |
| RVSM KIT ( Optional ) | 34-10-00 | 2 | 3 |
| RVSM KIT / Mode-S XPNDR (M.M.) | 34-10-00 | 3 | 1 |
| RVSM KIT / Mode-S XPNDR (M.M.) | 34-10-00 | 3 | 2 |
| RVSM KIT / Mode-S XPNDR (M.M.) | 34-10-00 | 3 | 3 |
| RVSM KIT ( AMI 1 e AMI 2) | 34-10-00 | 4 | 1 |
| RVSM KIT ( AMI 1 e AMI 2) | 34-10-00 | 4 | 2 |
| RVSM KIT ( AMI 1 e AMI 2) | 34-10-00 | 4 | 3 |
| Switching Device Unit (Optional) | 34-10-10 | 1 | |
| Copilot Altimeter | 34-11-00 | 1 | |
| Air Data System | 34-12-00 | 1 | 1 |
| Air Data System | 34-12-00 | 1 | 2 |
| Air Data System | 34-12-00 | 2 | 1 |
| Air Data System | 34-12-00 | 2 | 2 |
| Air Data Computer - Mach 0.7 (Optional) | 34-12-10 | 1 | |
| Encoder Altimeter-Copilot (Optional) | 34-13-00 | 1 | |
| ATTITUDE & DIRECTION | | | |
| Primary Compass & RMI | 34-21-00 | 1 | 1 |
| Primary Compass & RMI | 34-21-00 | 1 | 2 |
| Secondary Compass & RMI | 34-22-00 | 1 | 1 |
| Secondary Compass & RMI | 34-22-00 | 1 | 2 |
| Primary Flight Director (Part 1) | 34-23-00 | 1 | 1 |
| Primary Flight Director (Part 1) | 34-23-00 | 1 | 2 |
| Primary Flight Director (Part 1) | 34-23-00 | 1 | 3 |
| Primary Flight Director (Part 1) | 34-23-00 | 1 | 4 |
| Primary Flight Director (Part 1) | 34-23-00 | 2 | 1 |
| Primary Flight Director (Part 1) | 34-23-00 | 2 | 2 |
| Primary Flight Director (Part 1) | 34-23-00 | 2 | 3 |
| Primary Flight Director (Part 1) | 34-23-00 | 2 | 4 |
| Primary Flight Director (Part 2) | 34-23-00 | 3 | 1 |
| Primary Flight Director (Part 2) | 34-23-00 | 3 | 2 |


*Continued on the next page*

| SUBJECT | CHAPTER SECTION SUBJECT | PAGE | SHEET |
|---|---|---|---|
| ATTITUDE & DIRECTION (Cont.) | | | |
| Primary Flight Director (Part 2) | 34-23-00 | 3 | 3 |
| Primary Flight Director (Part 2) | 34-23-00 | 3 | 4 |
| Primary Flight Director (Part 2) | 34-23-00 | 4 | 1 |
| Primary Flight Director (Part 2) | 34-23-00 | 4 | 2 |
| Primary Flight Director (Part 2) | 34-23-00 | 4 | 3 |
| Primary Flight Director (Part 2) | 34-23-00 | 4 | 4 |
| Flight Director | 34-24-00 | 1 | 1 |
| Flight Director | 34-24-00 | 1 | 2 |
| Flight Director | 34-24-00 | 1 | 3 |
| Flight Director | 34-24-00 | 1 | 4 |
| Turn/slip Electrical System | 34-25-00 | 1 | |
| Turn/slip Electrical System (Optional) | 34-25-00 | 2 | |
| Turn/slip Electrical System (Optional) | 34-25-00 | 3 | |
| Stby Horizon | 34-27-00 | 1 | |
| Stby Horizon | 34-27-00 | 2 | |
| Stby Horizon | 34-27-00 | 3 | |
| Stby Horizon | 34-27-00 | 4 | |
| RMI-Single Installation (Optional) | 34-28-00 | 1 | 1 |
| RMI-Single Installation (Optional) | 34-28-00 | 1 | 2 |
| RMI-Single Installation (Optional) | 34-28-00 | 1 | 3 |
| INDEPENDENT POSITION DETERMINING | | | |
| Weather Radar | 34-41-00 | 1 | |
| Radio Altimeter | 34-42-00 | 1 | |
| Radio Altimeter | 34-42-00 | 2 | |
| TCAS 1 ( Optional ) | 34-43-00 | 1 | 1 |
| TCAS 1 ( Optional ) | 34-43-00 | 1 | 2 |
| TCAS 1 ( Optional ) | 34-43-00 | 1 | 3 |
| TCAS 1 / MODE-S XPNDR ( M.M.) | 34-43-00 | 2 | 1 |
| TCAS 1 / MODE-S XPNDR ( M.M.) | 34-43-00 | 2 | 2 |
| TCAS 1 / MODE-S XPNDR ( M.M.) | 34-43-00 | 2 | 3 |
| TAWS (optional ) | 34-44-00 | 1 | 1 |
| TAWS (optional ) | 34-44-00 | 1 | 2 |
| TAWS (optional ) | 34-44-00 | 1 | 3 |
| TAWS (optional ) | 34-44-00 | 1 | 4 |
| TAWS with TCAS connections (optional ) | 34-45-00 | 1 | |
| DEPENDENT POSITION DETERMINING | | | |
| Primary Navigation DME | 34-51-00 | 1 | 1 |
| Primary Navigation DME | 34-51-00 | 1 | 2 |


*Continued on the next page*

| SUBJECT | CHAPTER SECTION SUBJECT | PAGE | SHEET |
|---|---|---|---|
| DEPENDENT POSITION DETERMINING | | | |
| Primary Navigation DME | 34-51-00 | 1 | 3 |
| Dual Audio DME (Optional) | 34-51-10 | 1 | |
| Secondary Navigation | 34-52-00 | 1 | |
| ADF | 34-53-00 | 1 | |
| ADF | 34-53-00 | 2 | |
| Dual Transponder | 34-54-00 | 1 | 1 |
| Dual Transponder | 34-54-00 | 1 | 2 |
| Transponder TDR 90 (Optional) | 34-54-10 | 1 | |
| XPNDR TDR 90 / 94 MODE-S (Optional) | 34-54-20 | 1 | 1 |
| XPNDR TDR 90 / 94 MODE-S (Optional) | 34-54-20 | 1 | 2 |
| Mode S EHS with Uns connection (opt.) | 34-54-21 | 1 | 1 |
| Mode S EHS with Uns connection (opt.) | 34-54-21 | 1 | 2 |
| Mode S EHS with Uns connection (opt.) | 34-54-21 | 1 | 3 |
| Mode S EHS with Uns connection (opt.) | 34-54-21 | 1 | 4 |
| Mode S EHS with Uns connection (opt.) | 34-54-21 | 1 | 5 |
| Mode S EHS for E.I. configuration (opt.) | 34-54-21 | 2 | |
| Mode S EHS for AMI 2 Configuration (opt.) | 34-54-21 | 3 | 1 |
| Mode S EHS for AMI 2 Configuration (opt.) | 34-54-21 | 3 | 2 |
| Mode S EHS for M.M. Configuration (opt.) | 34-54-21 | 4 | 1 |
| Mode S EHS for M.M. Configuration (opt.) | 34-54-21 | 4 | 2 |
| XPNDR TDR 94 MODE-S/IFF (OPT. SMA) | 34-54-30 | 1 | 1 |
| XPNDR TDR 94 MODE-S/IFF (OPT. SMA) | 34-54-30 | 1 | 2 |
| XPNDR TDR 94 MODE-S/IFF-TCAS-RVSM (opt. M.M.) | 34-54-40 | 1 | 1 |
| XPNDR TDR 94 MODE-S/IFF-TCAS-RVSM (opt. M.M.) | 34-54-40 | 1 | 2 |
| XPNDR TDR 94 MODE-S/IFF-TCAS-RVSM (opt. M.M.) | 34-54-40 | 1 | 3 |
| Dual ADF (Optional) | 34-55-00 | 1 | 1 |
| Dual ADF (Optional) | 34-55-00 | 1 | 2 |
| Loran Omega (Optional) | 34-56-00 | 1 | 1 |
| Loran Omega (Optional) | 34-56-00 | 1 | 2 |
| Loran Omega (Optional) | 34-56-00 | 1 | 3 |
| Loran Omega (Optional) | 34-56-00 | 1 | 4 |
| Loran Omega (Optional) | 34-56-00 | 2 | 1 |
| Loran Omega (Optional) | 34-56-00 | 2 | 2 |
| Loran Omega (Optional) | 34-56-00 | 2 | 3 |
| Loran Omega (Optional) | 34-56-00 | 2 | 4 |
| GPS (P/Y CODE) Optional | 34-56-10 | 1 | |


*Continued on the next page*

| SUBJECT | CHAPTER SECTION SUBJECT | PAGE | SHEET |
|---|---|---|---|
| DEPENDENT POSITION DETERMINING (Cont.) | | | |
| Rubidium Frequency Unit (Optional) | 34-56-20 | 1 | |
| Secondary DME (Optional) | 34-57-00 | 1 | |
| Dual Marker (Optional) | 34-58-10 | 1 | |
| FMS/UNS 1A (Optional) | 34-59-10 | 1 | 1 |
| FMS/UNS 1A (Optional) | 34-59-10 | 1 | 2 |
| FMS/UNS 1A (Optional) | 34-59-10 | 1 | 3 |
| FMS/UNS 1A (Optional) | 34-59-10 | 1 | 4 |
| FMS/UNS 1A MMMS (Optional) | 34-59-20 | 1 | 1 |
| FMS/UNS 1A MMMS (Optional) | 34-59-20 | 1 | 2 |
| FMS/UNS 1A MMMS (Optional) | 34-59-20 | 1 | 3 |
| FMS/UNS 1A MMMS (Optional) | 34-59-20 | 1 | 4 |
| FMS/UNS 1B (Optional) | 34-59-30 | 1 | 1 |
| FMS/UNS 1B (Optional) | 34-59-30 | 1 | 2 |
| FMS/UNS 1B (Optional) | 34-59-30 | 1 | 3 |
| FMS/UNS 1B (Optional) | 34-59-30 | 1 | 4 |
| FMS/UNS 1D (Optional) | 34-59-40 | 1 | 1 |
| FMS/UNS 1D (Optional) | 34-59-40 | 1 | 2 |
| FMS/UNS 1D (Optional) | 34-59-40 | 1 | 3 |
| FMS/UNS 1D (Optional) | 34-59-40 | 1 | 4 |
| RRS/UNS 1D (Optional) | 34-59-41 | 1 | |
| FMS/UNS 1K (Optional) | 34-59-60 | 1 | 1 |
| FMS/UNS 1K (Optional) | 34-59-60 | 1 | 2 |
| FMS/UNS 1K (Optional) | 34-59-60 | 1 | 3 |
| FMS/UNS 1K (Optional) | 34-59-60 | 1 | 4 |
| FMS/UNS 1K MMMS (Optional) | 34-59-70 | 1 | 1 |
| FMS/UNS 1K MMMS (Optional) | 34-59-70 | 1 | 2 |
| FMS/UNS 1K MMMS (Optional) | 34-59-70 | 1 | 3 |
| FMS/UNS 1K MMMS (Optional) | 34-59-70 | 1 | 4 |
| UNS 1L MMMS (AMI 1 & M.M.) | 34-59-80 | 1 | 1 |
| UNS 1L MMMS (AMI 1 & M.M.) | 34-59-80 | 1 | 2 |
| UNS 1L MMMS (AMI 1 & M.M.) | 34-59-80 | 1 | 3 |
| FMS/UNS 1L (Optional) | 34-59-90 | 1 | 1 |
| FMS/UNS 1L (Optional) | 34-59-90 | 1 | 2 |
| FMS/UNS 1L (Optional) | 34-59-90 | 1 | 3 |

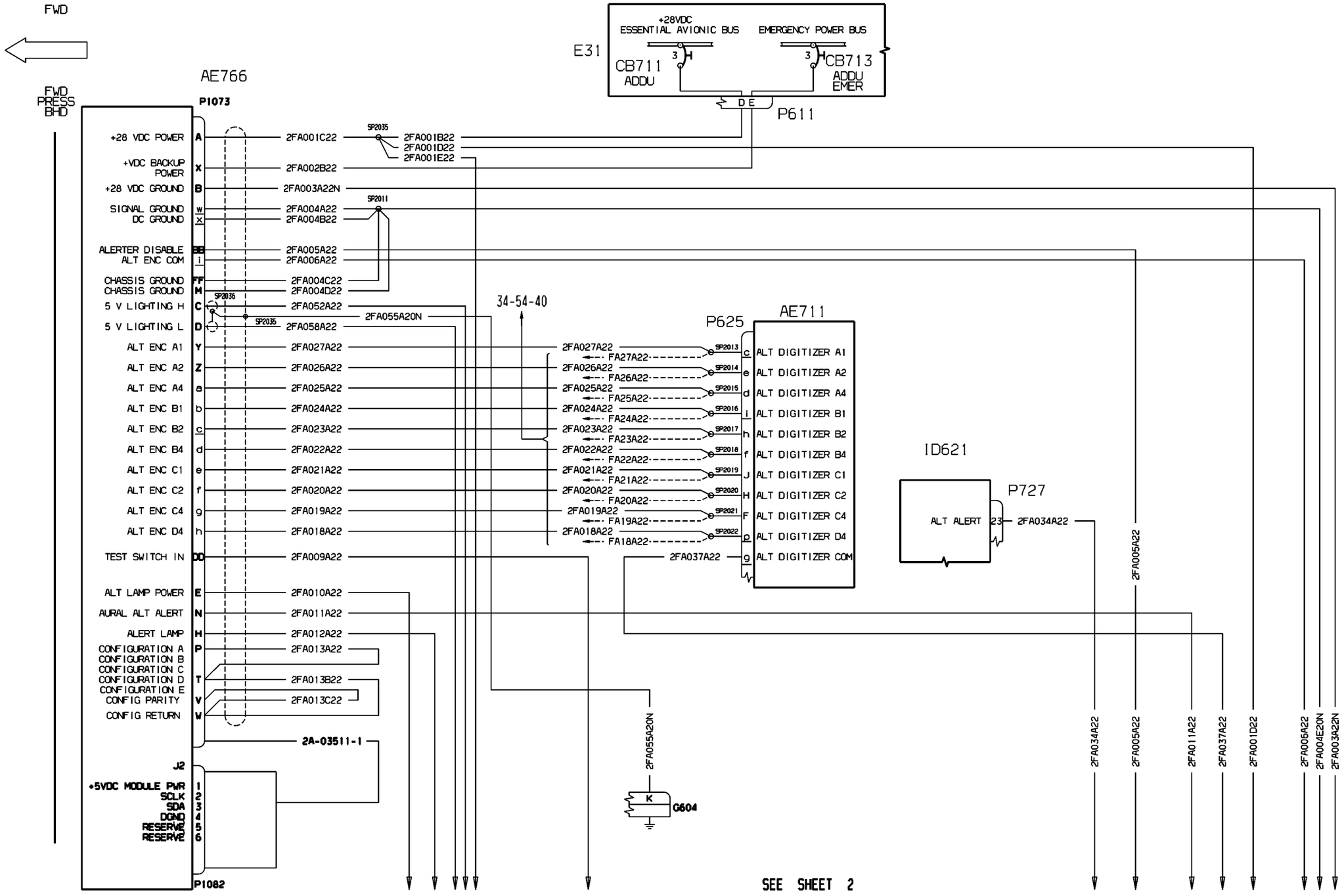


WM_34100CJA1

| EFFECTIVITY: | FLIGHT ENVIRONMENT DATA |
|---|---|
| 1067-1104 | RVSM Provision ( Optional ) |

**34-10-00**

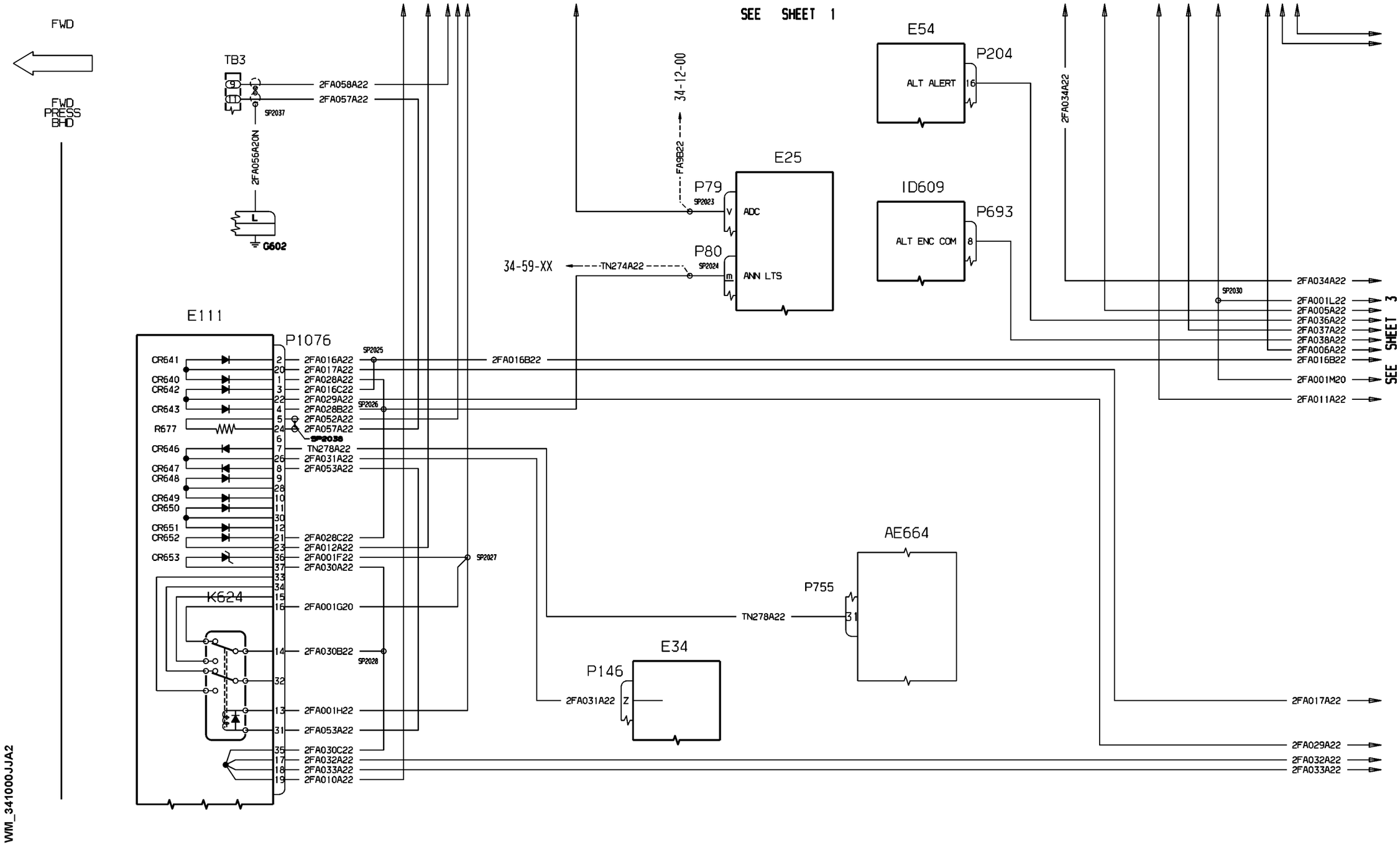


| EFFECTIVITY: 1067-1104 | FLIGHT ENVIRONMENT DATA<br>RVSM Provision ( Optional ) |
|---|---|

**34-10-00**

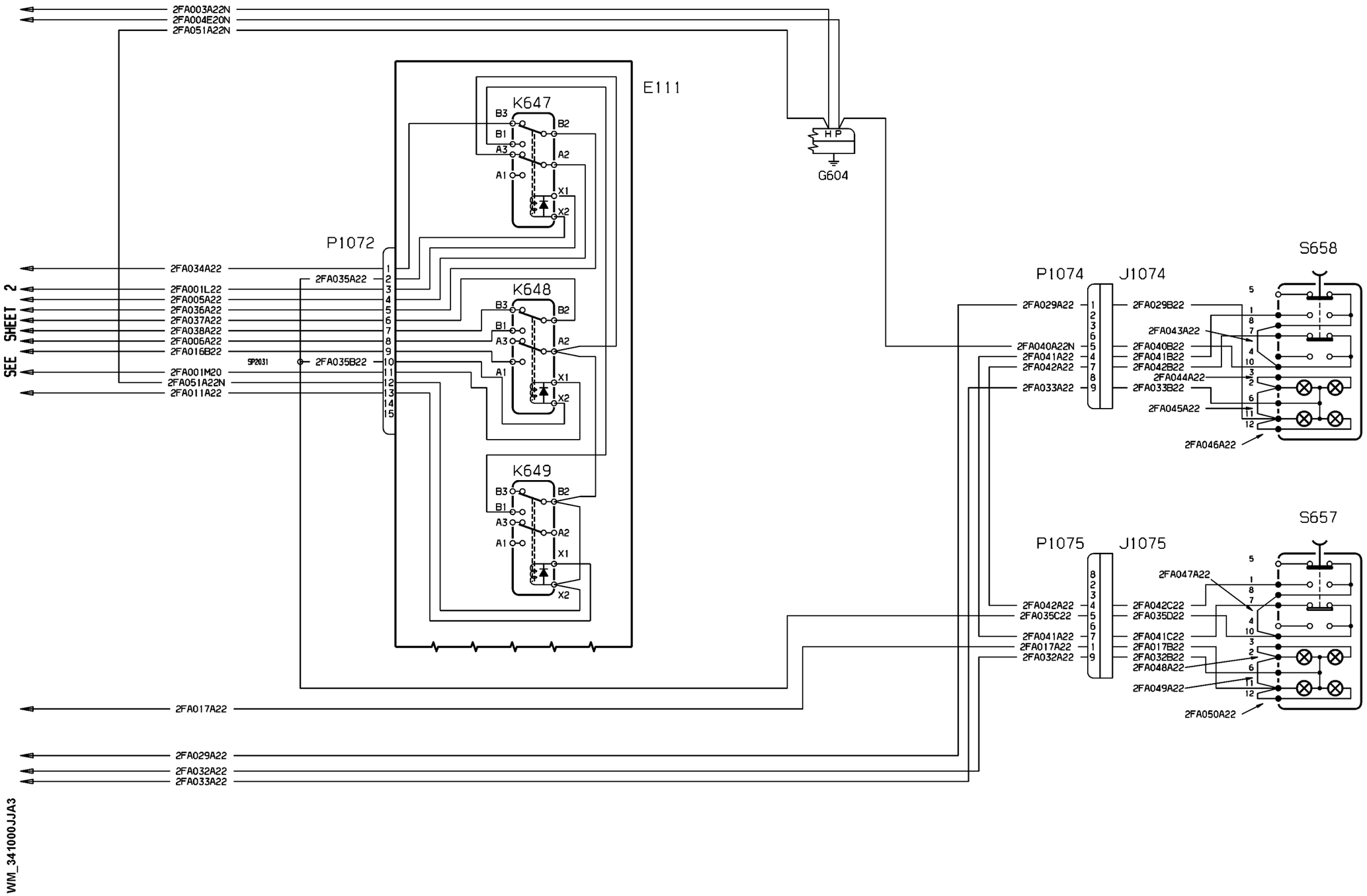
2FA003A22N
2FA004E20N
2FA051A22N
E111
K647
B3
B2
B1
A3
A2
A1
X1
X2
K648
K649
HP
G604
P1072
S658
P1074
J1074
S657
P1075
J1075
SEE SHEET 2
2FA034A22
2FA035A22
2FA001L22
2FA005A22
2FA036A22
2FA037A22
2FA038A22
2FA006A22
2FA016B22
SP2031
2FA035B22
2FA001M20
2FA051A22N
2FA011A22
2FA029A22
2FA040A22N
2FA041A22
2FA042A22
2FA033A22
2FA029B22
2FA043A22
2FA040B22
2FA041B22
2FA042B22
2FA044A22
2FA033B22
2FA045A22
2FA046A22
2FA047A22
2FA042C22
2FA035C22
2FA035D22
2FA041C22
2FA017A22
2FA017B22
2FA032A22
2FA032B22
2FA048A22
2FA049A22
2FA050A22
2FA017A22
2FA029A22
2FA032A22
2FA033A22
WM_341000JJA3

Note: Effectivity 1004 - 1066 if SB: 161 Rev1 (Opt.) and SB. 80-0190 Mandatory , embodied

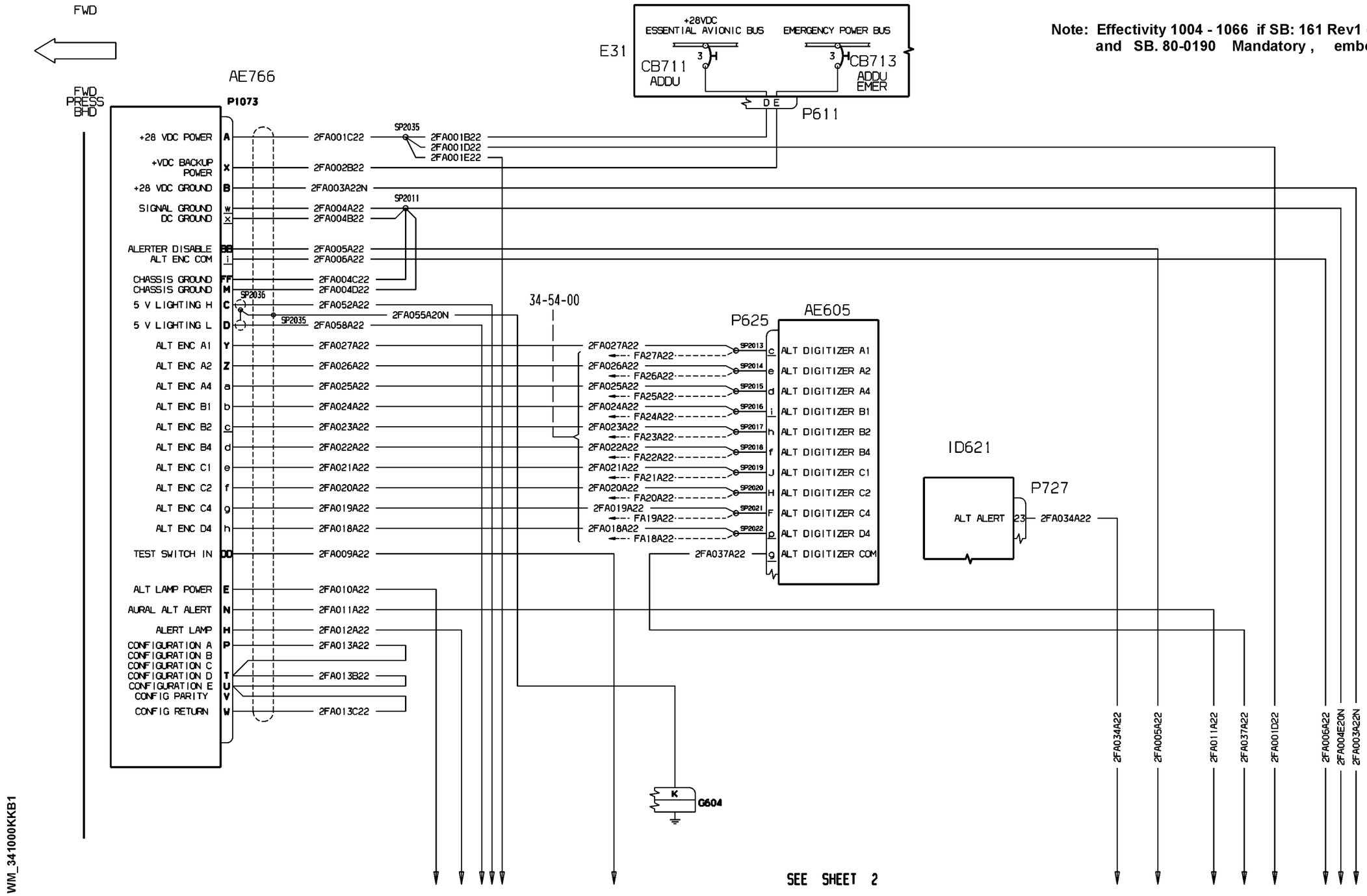


| EFFECTIVITY: 1067-1104 | FLIGHT ENVIRONMENT DATA RVSM KIT ( Optional ) |
|---|---|

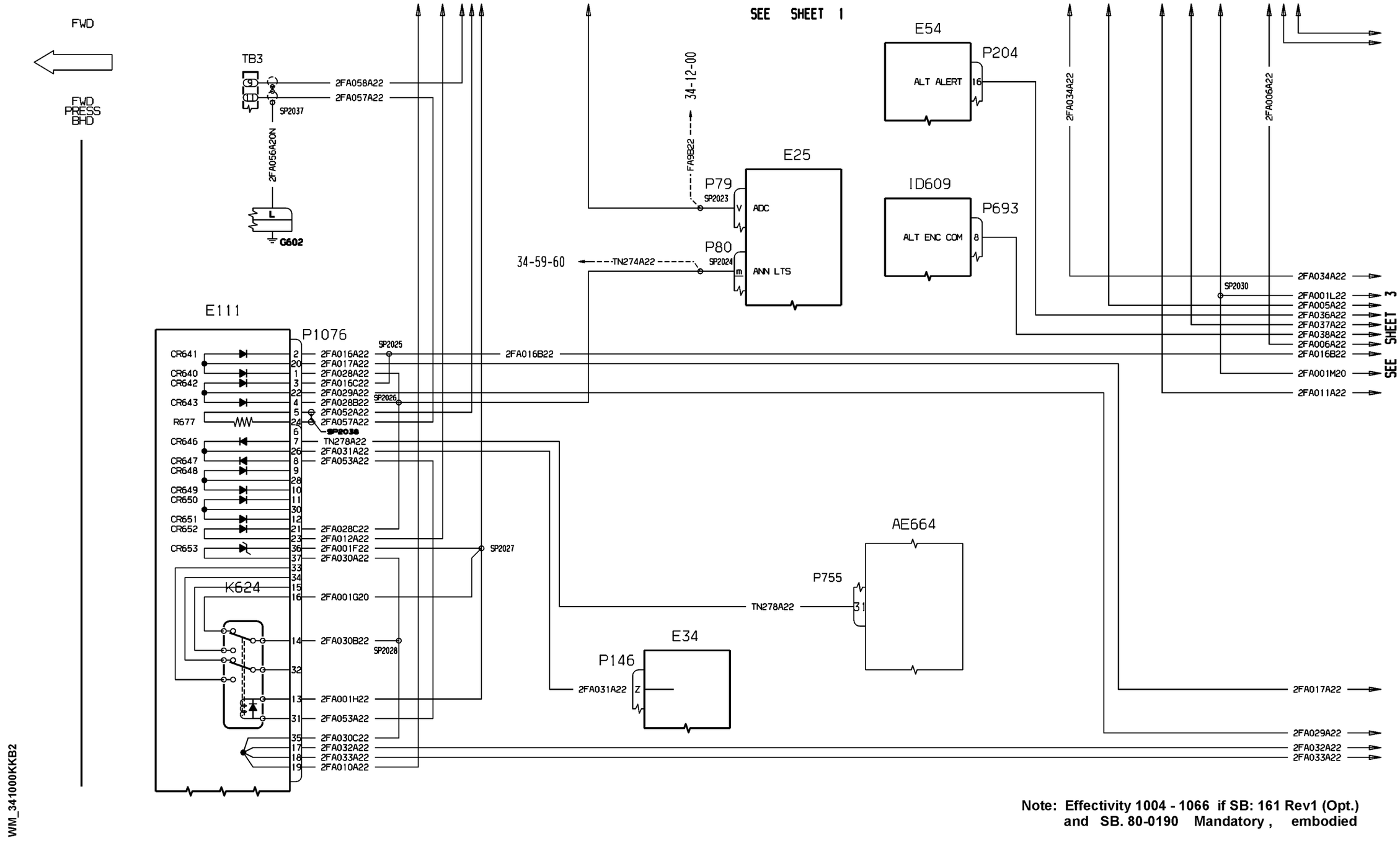


**Note: Effectivity 1004 - 1066 if SB: 161 Rev1 (Opt.) and SB. 80-0190 Mandatory , embodied**

**Note: Effectivity 1004 - 1066 if SB: 161 Rev1 (Opt.) and SB. 80-0190 Mandatory , embodied**

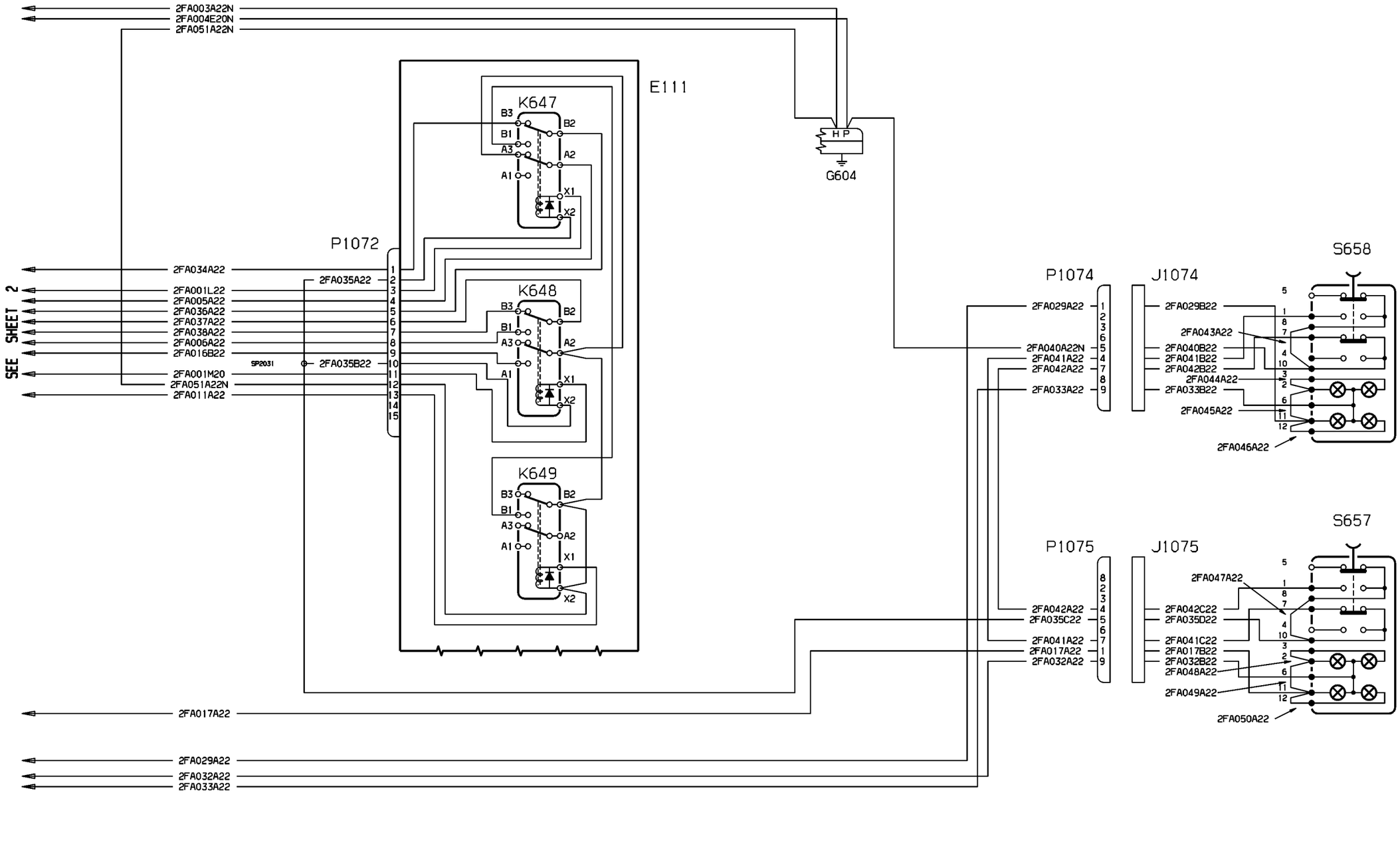


WM_341000KKB3

| EFFECTIVITY: | FLIGHT ENVIRONMENT DATA |
|---|---|
| 1067-1104 | RVSM KIT ( Optional ) |

Note: Effectivity 1004 - 1066 if SB. 80-0162 rev1 and SB. 80-0190 mandatory , embodied

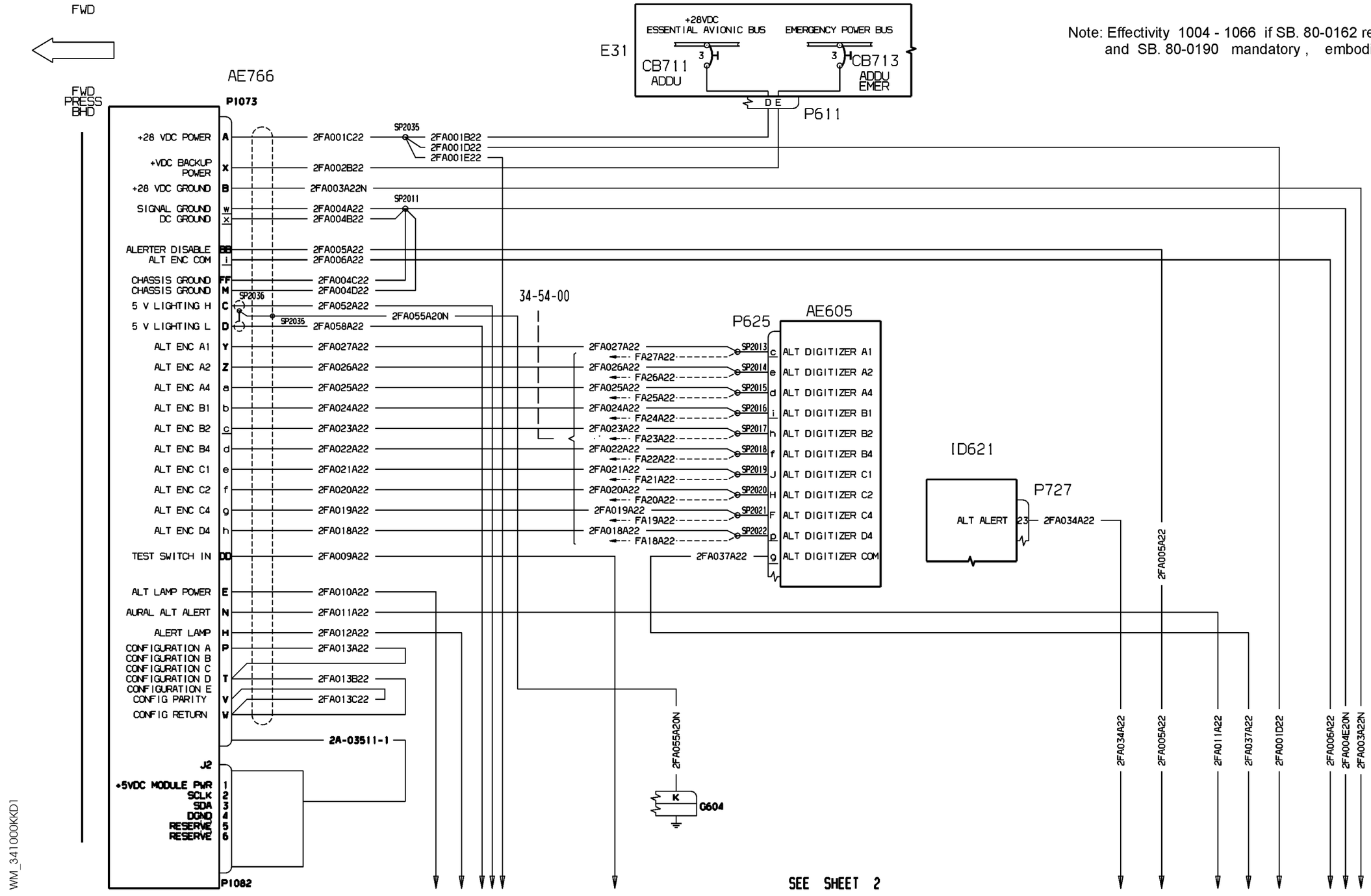

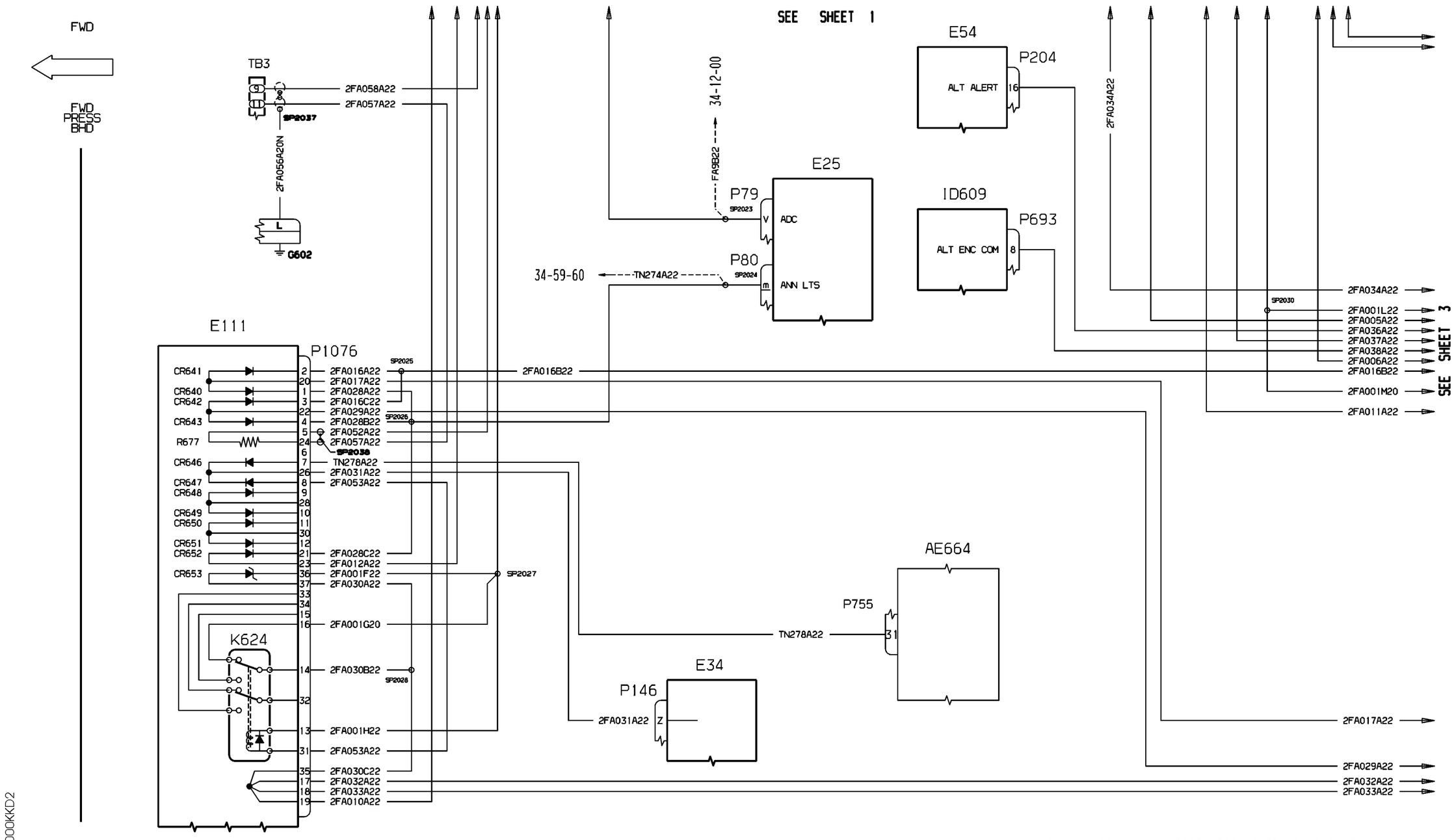


Note: Effectivity 1004-1066 if SB. 80-0161 Revl and SB. 80-0190 Mandatory embodied

WM_341000KKD2

Note: Effectivity 1004 - 1066 if SB. 80-0162 rev1
and SB. 80-0190 mandatory , embodied

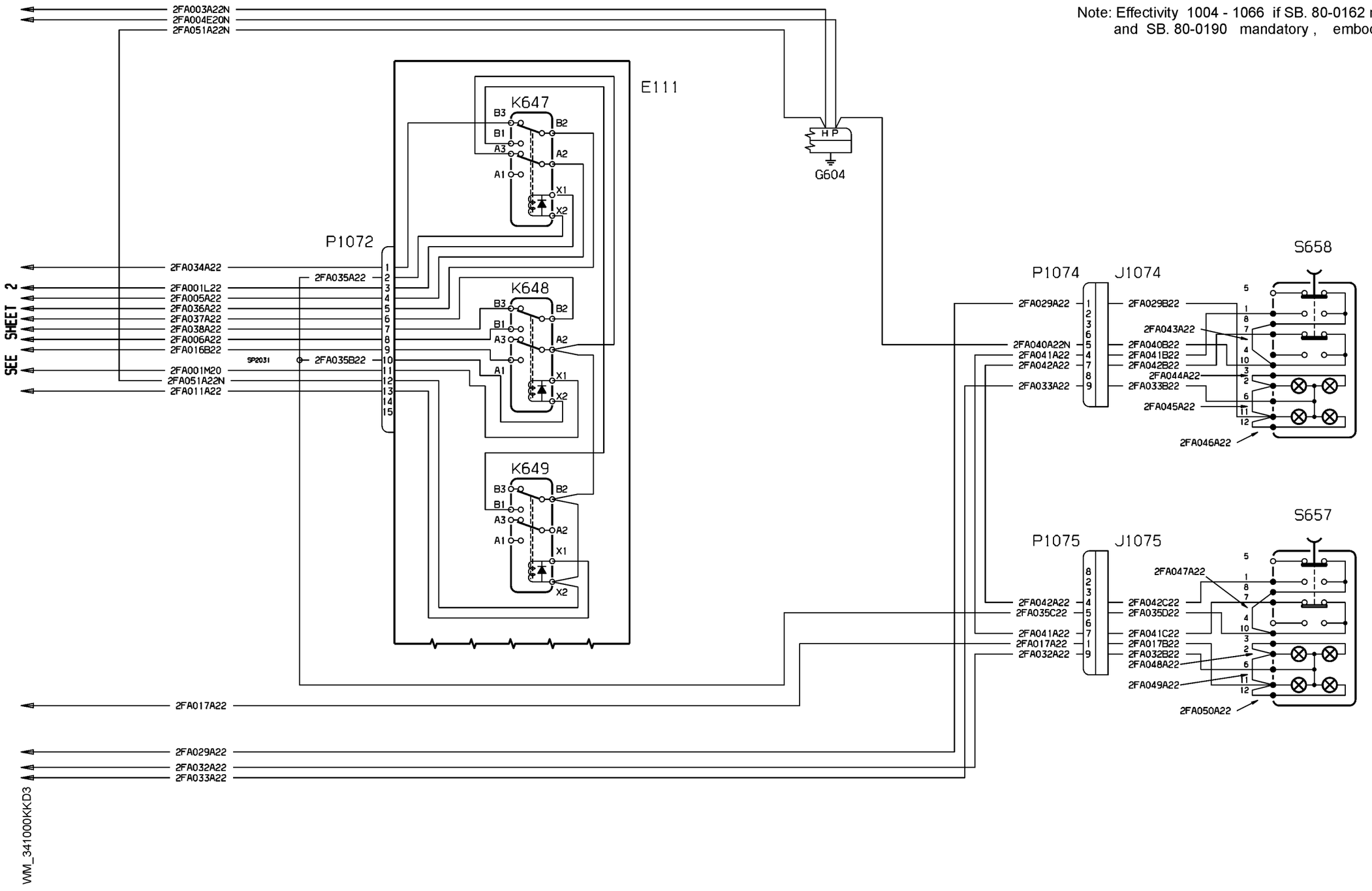

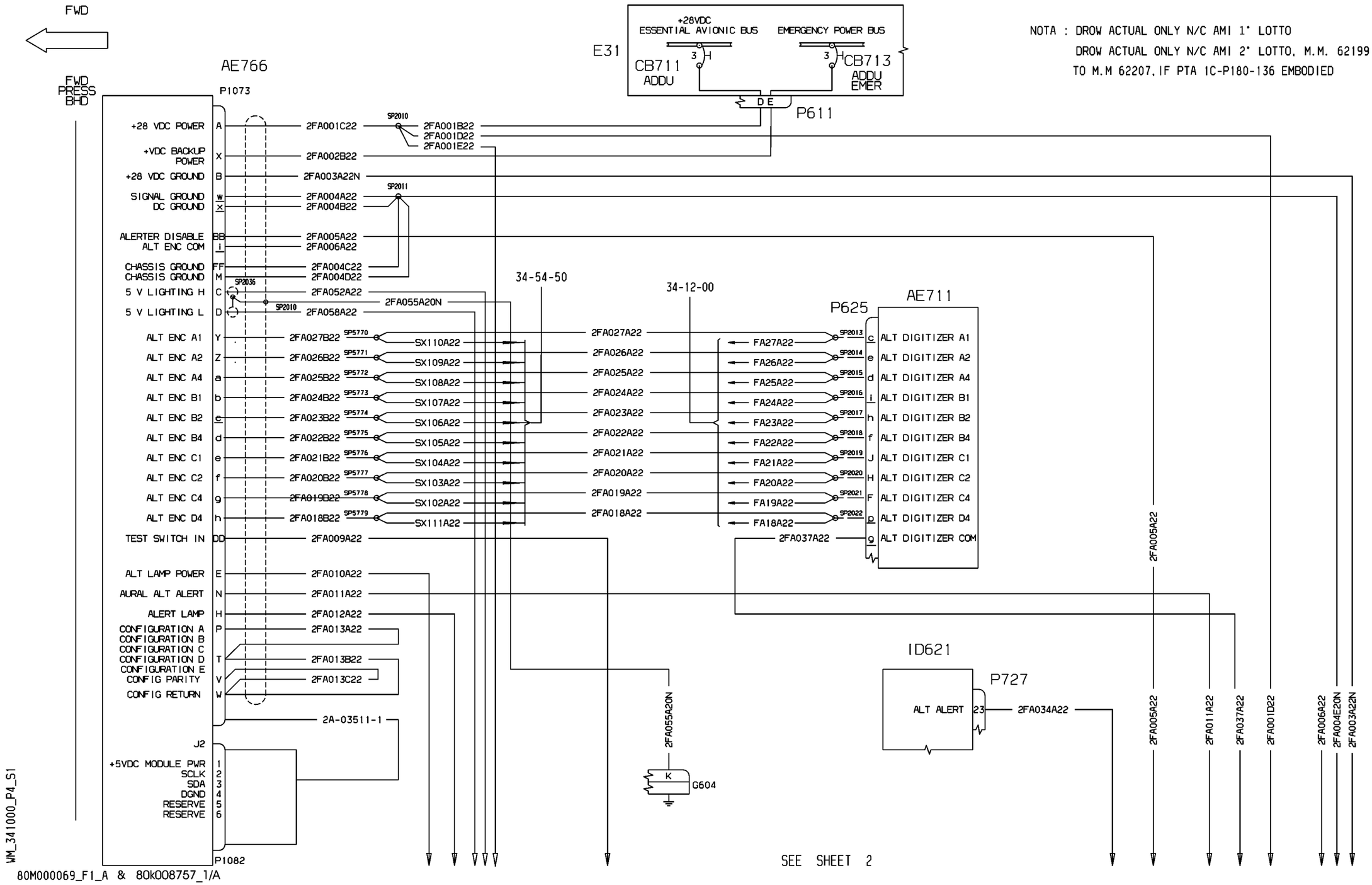
FWD
FWD PRESS BHD
AE766
P1073
E31
+28VDC ESSENTIAL AVIONIC BUS
EMERGENCY POWER BUS
CB711 ADDU
CB713 ADDU EMER
D E
P611
NOTA : DROW ACTUAL ONLY N/C AMI 1° LOTTO
DROW ACTUAL ONLY N/C AMI 2° LOTTO, M.M. 62199
TO M.M 62207, IF PTA 1C-P180-136 EMBODIED
+28 VDC POWER A 2FA001C22 SP2010 2FA001B22 2FA001D22 2FA001E22
+VDC BACKUP POWER X 2FA002B22
+28 VDC GROUND B 2FA003A22N
SIGNAL GROUND W 2FA004A22
DC GROUND X 2FA004B22
SP2011
ALERTER DISABLE BB 2FA005A22
ALT ENC COM J 2FA006A22
CHASSIS GROUND FF 2FA004C22
CHASSIS GROUND M 2FA004D22
5 V LIGHTING H C 2FA052A22 SP2036
2FA055A20N
5 V LIGHTING L D 2FA058A22 SP2010
34-54-50
34-12-00
P625
AE711
ALT ENC A1 Y 2FA027B22 SP5770 SX110A22 2FA027A22 FA27A22 SP2013 c ALT DIGITIZER A1
ALT ENC A2 Z 2FA026B22 SP5771 SX109A22 2FA026A22 FA26A22 SP2014 e ALT DIGITIZER A2
ALT ENC A4 a 2FA025B22 SP5772 SX108A22 2FA025A22 FA25A22 SP2015 d ALT DIGITIZER A4
ALT ENC B1 b 2FA024B22 SP5773 SX107A22 2FA024A22 FA24A22 SP2016 i ALT DIGITIZER B1
ALT ENC B2 e 2FA023B22 SP5774 SX106A22 2FA023A22 FA23A22 SP2017 h ALT DIGITIZER B2
ALT ENC B4 d 2FA022B22 SP5775 SX105A22 2FA022A22 FA22A22 SP2018 f ALT DIGITIZER B4
ALT ENC C1 e 2FA021B22 SP5776 SX104A22 2FA021A22 FA21A22 SP2019 J ALT DIGITIZER C1
ALT ENC C2 f 2FA020B22 SP5777 SX103A22 2FA020A22 FA20A22 SP2020 H ALT DIGITIZER C2
ALT ENC C4 g 2FA019B22 SP5778 SX102A22 2FA019A22 FA19A22 SP2021 F ALT DIGITIZER C4
ALT ENC D4 h 2FA018B22 SP5779 SX111A22 2FA018A22 FA18A22 SP2022 D ALT DIGITIZER D4
TEST SWITCH IN DD 2FA009A22 2FA037A22 G ALT DIGITIZER COM
ALT LAMP POWER E 2FA010A22
AURAL ALT ALERT N 2FA011A22
ALERT LAMP H 2FA012A22
CONFIGURATION A P 2FA013A22
CONFIGURATION B
CONFIGURATION C
CONFIGURATION D T 2FA013B22
CONFIGURATION E
CONFIG PARITY V 2FA013C22
CONFIG RETURN W
2A-03511-1
J2
+5VDC MODULE PWR 1
SCLK 2
SDA 3
DGND 4
RESERVE 5
RESERVE 6
P1082
2FA055A20N
K
G604
ID621
P727
ALT ALERT 23 2FA034A22
2FA005A22
2FA011A22
2FA037A22
2FA001D22
2FA006A22
2FA004E20N
2FA003A22N
SEE SHEET 2
WM_341000_P4_S1
80M000069_F1_A & 80K008757_1/A

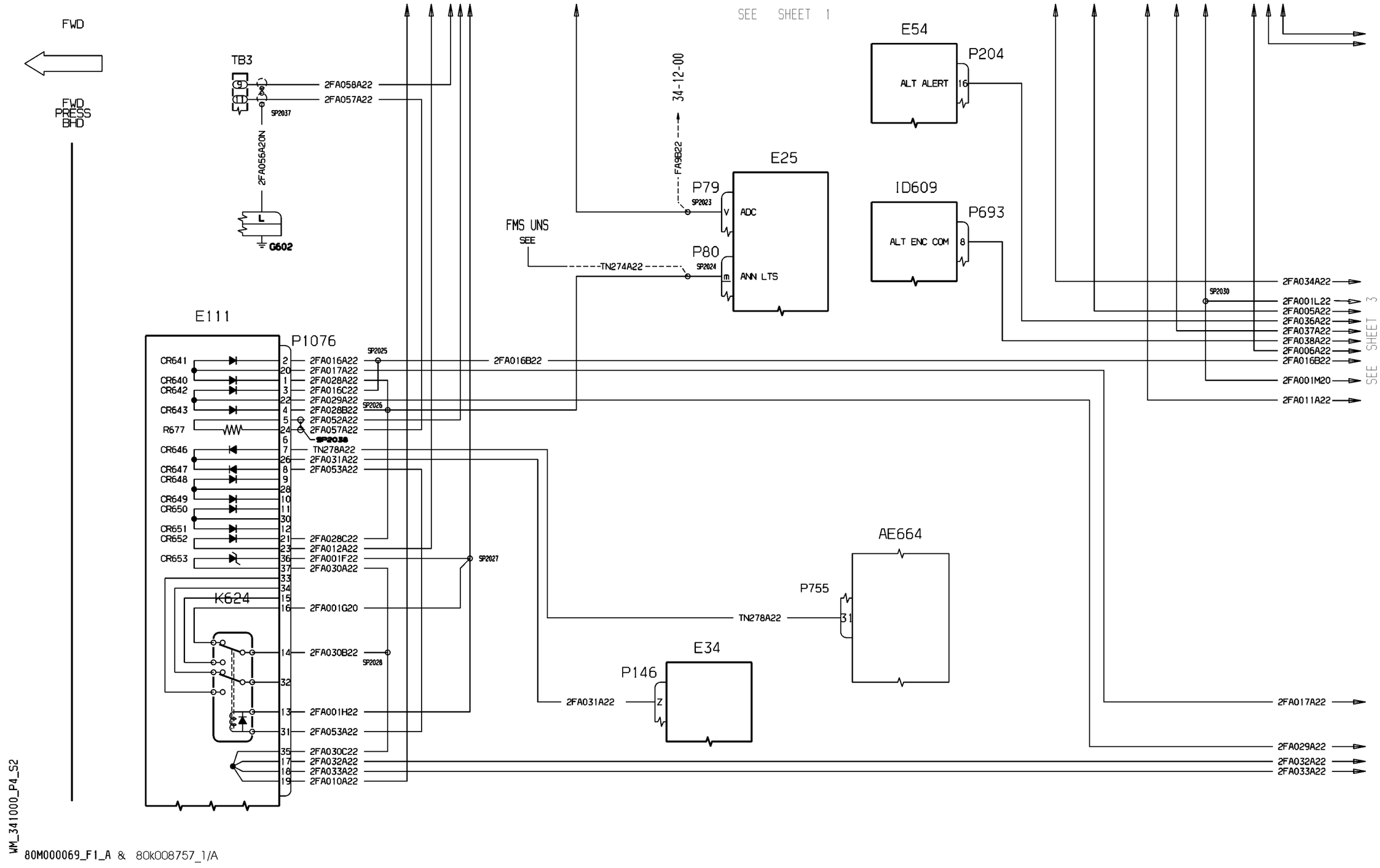
FWD
FWD PRESS BHD
SEE SHEET 1
TB3
2FA058A22
2FA057A22
SP2037
2FA056A20N
G602
34-12-00
FA9B22
E25
P79
SP2023
V
ADC
P80
SP2024
m
ANN LTS
FMS UNS
SEE
TN274A22
E54
P204
ALT ALERT
16
ID609
P693
ALT ENC COM
8
2FA034A22
SP2030
2FA001L22
2FA005A22
2FA036A22
2FA037A22
2FA038A22
2FA006A22
2FA016B22
2FA001M20
2FA011A22
SEE SHEET 3
E111
P1076
CR641
CR640
CR642
CR643
R677
CR646
CR647
CR648
CR649
CR650
CR651
CR652
CR653
K624
SP2025
2FA016A22
2FA017A22
2FA028A22
2FA016C22
2FA029A22
SP2026
2FA028B22
2FA052A22
2FA057A22
SP2038
TN278A22
2FA031A22
2FA053A22
2FA028C22
2FA012A22
SP2027
2FA001F22
2FA030A22
2FA001G20
2FA030B22
SP2028
2FA001H22
2FA053A22
2FA030C22
2FA032A22
2FA033A22
2FA010A22
AE664
P755
TN278A22
E34
P146
2FA031A22
2FA017A22
2FA029A22
2FA032A22
2FA033A22
WM_341000_P4_S2
80M000069_F1_A & 80k008757_1/A

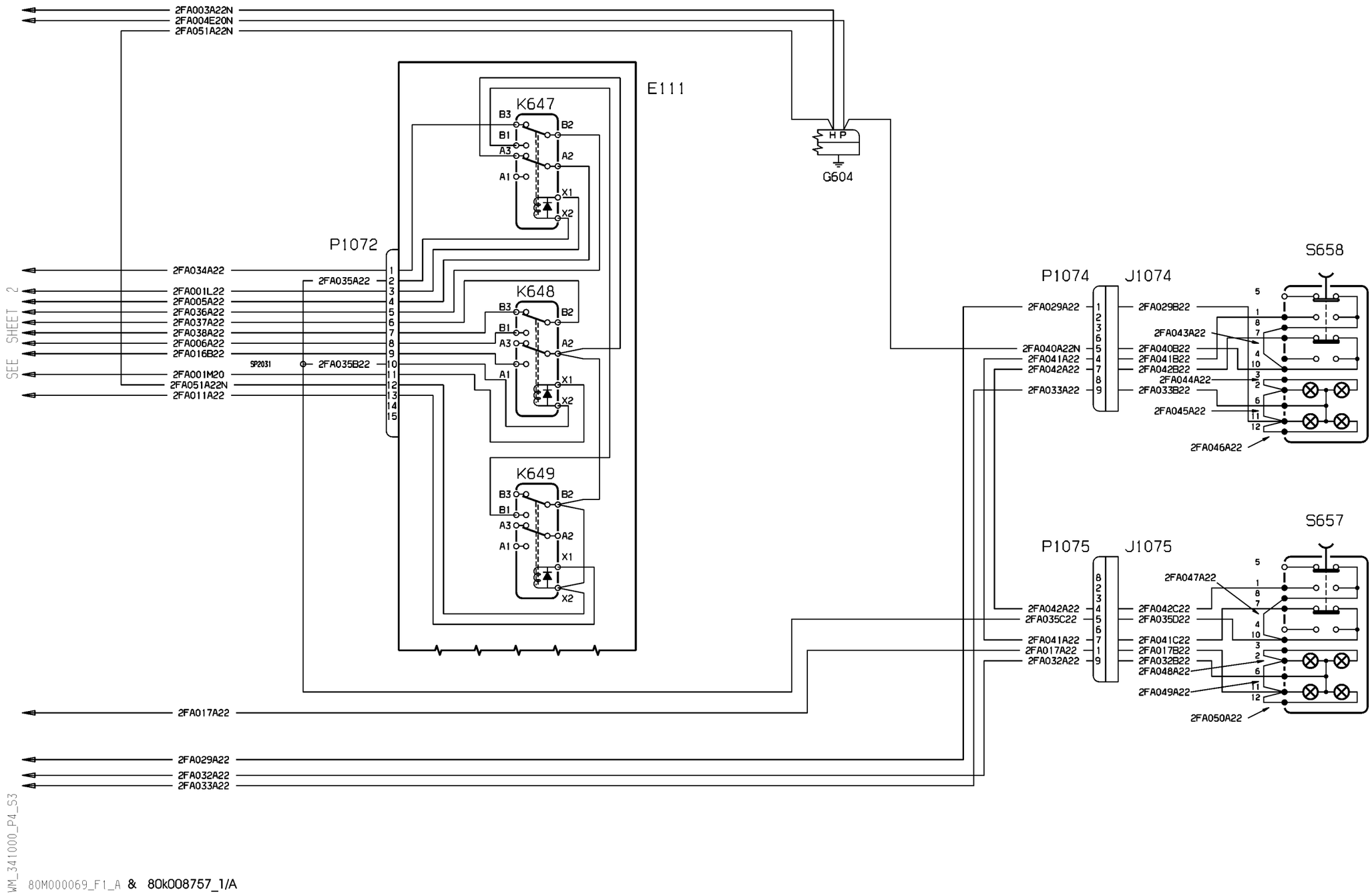


WM_341000_P4_S3

80M000069_F1_A & 80k008757_1/A

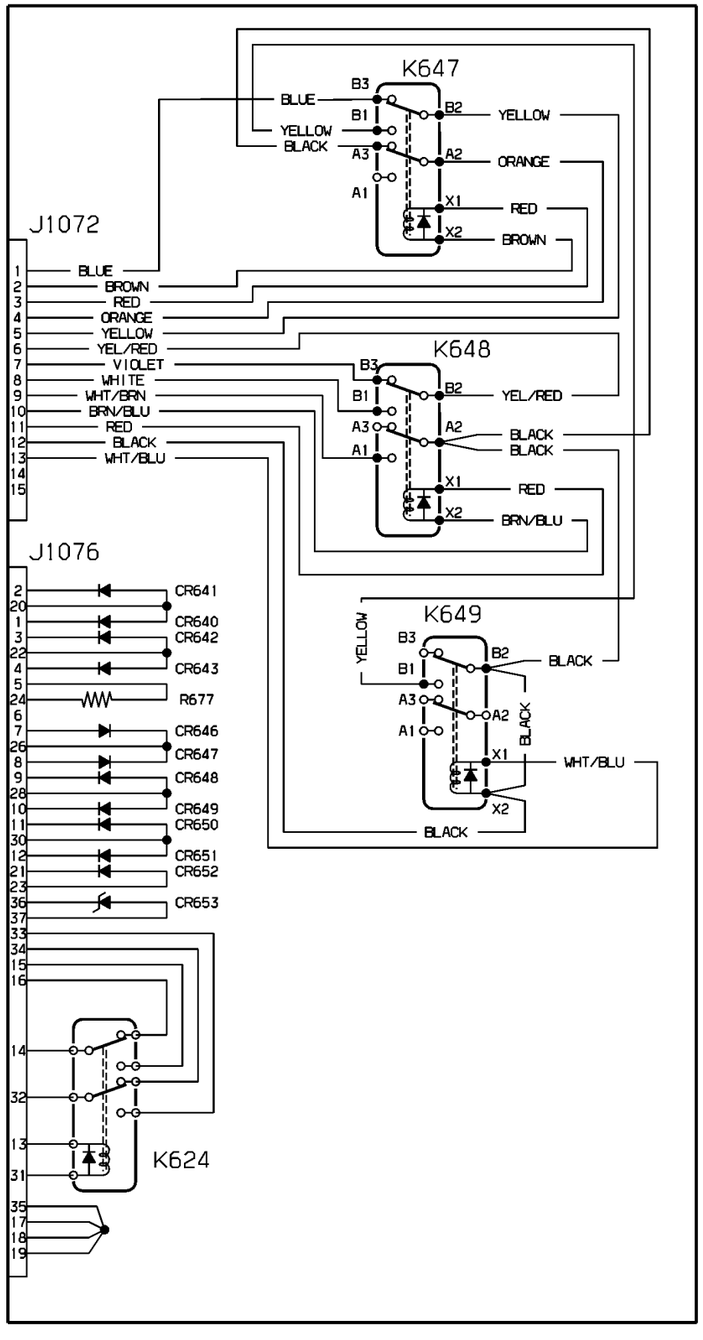


E111

WM_341010_001_01

80k118705_1/B

| EFFECTIVITY: | FLIGHT ENVIRONMENT DATA<br>Switching Device Unit (Optional) |
|---|---|

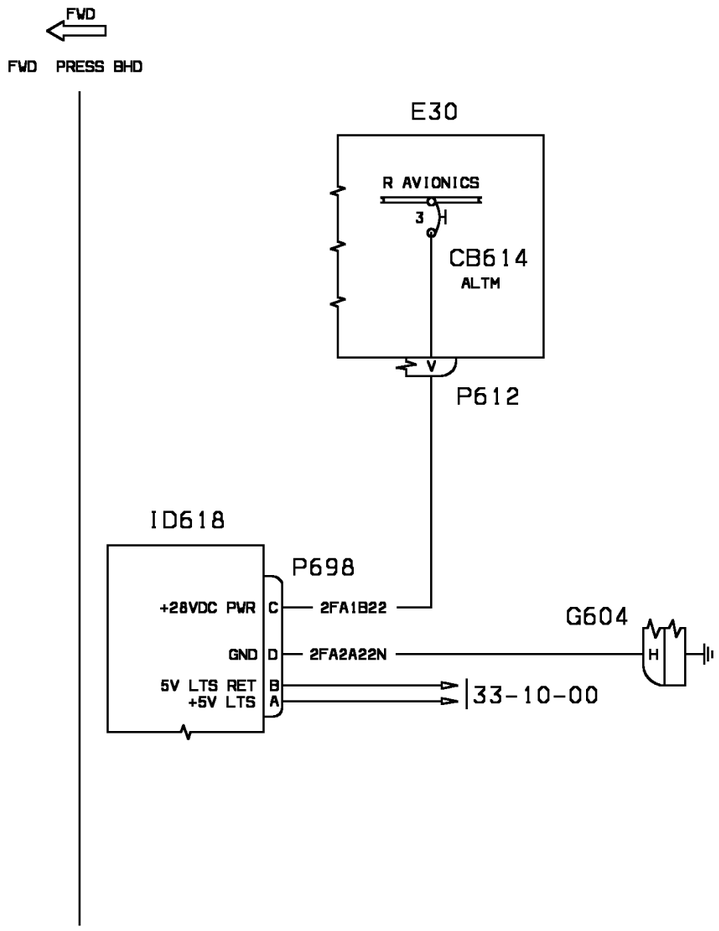
FWD
FWD PRESS BHD
E30
R AVIONICS
3
CB614
ALTM
V
P612
ID618
P698
+28VDC PWR C
2FA1B22
GND D
2FA2A22N
5V LTS RET B
+5V LTS A
G604
H
33-10-00

WM_341100AA

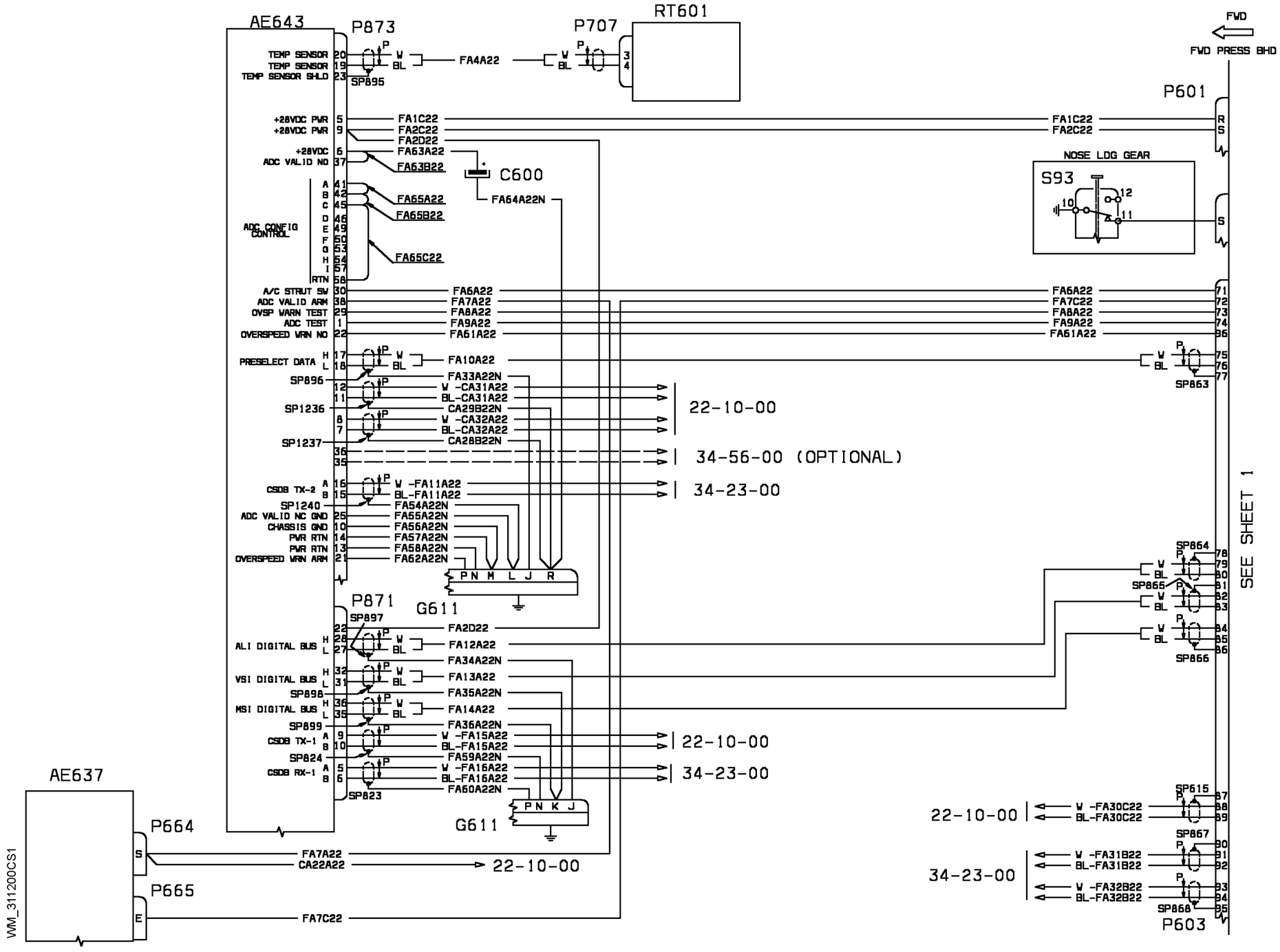


| EFFECTIVITY: | FLIGHT ENVIRONMENT DATA |
|---|---|
| 1004-1058 | Air Data System |

**34-12-00**

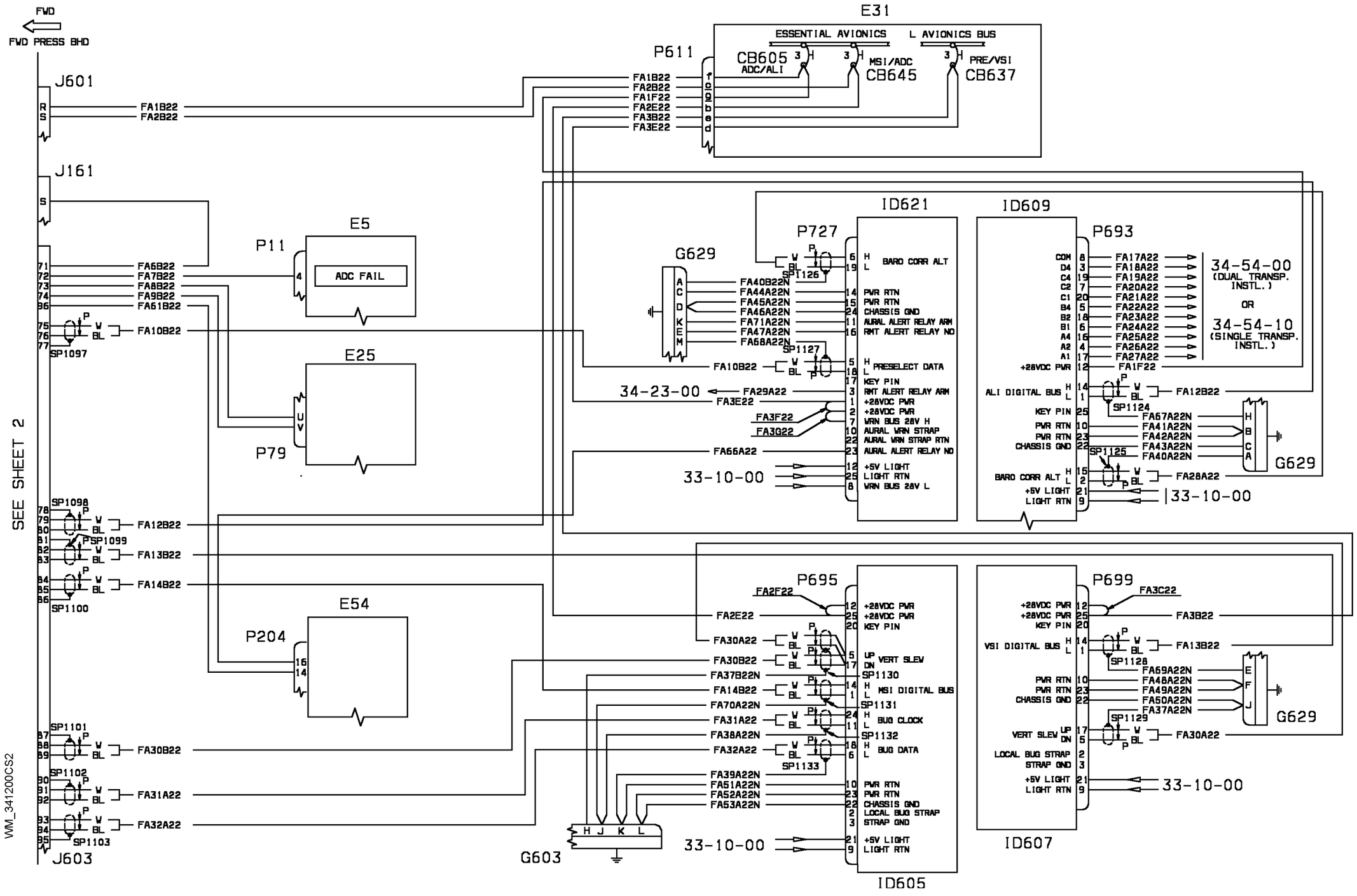


| EFFECTIVITY: 1004-1058 | FLIGHT ENVIRONMENT DATA<br>Air Data System |
|---|---|

34-12-00

Sheet 2 of 2
Page 1
Oct. 30/09

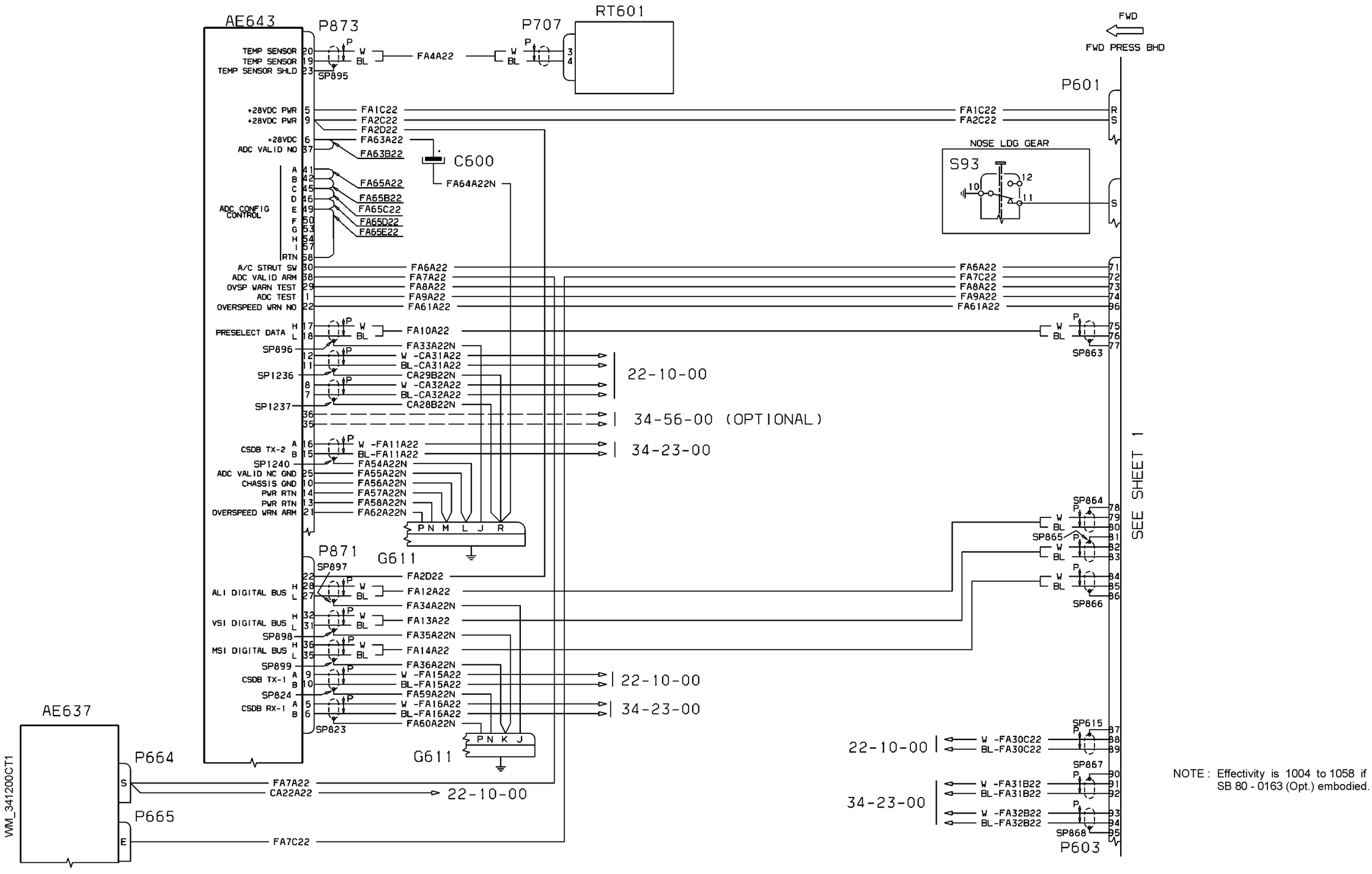


NOTE : Effectivity is 1004 to 1058 if SB 80 - 0163 (Opt.) embodied.

| EFFECTIVITY: | FLIGHT ENVIRONMENT DATA |
|---|---|
| 1059-1104 | Air Data System |

**34-12-00**

NOTE : Effectivity is 1004 to 1058 if SB 80 - 0163 (Opt.) embodied.

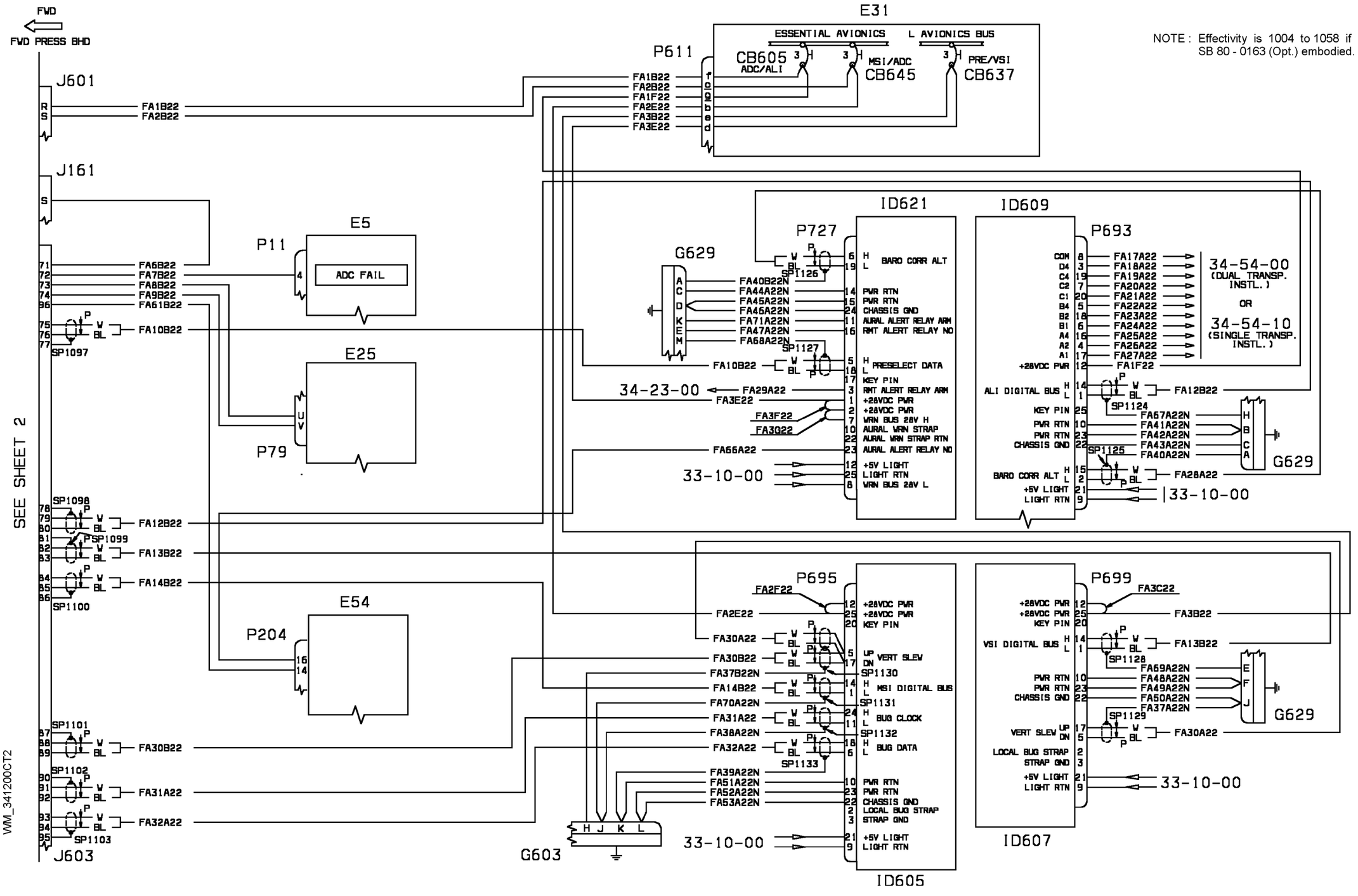

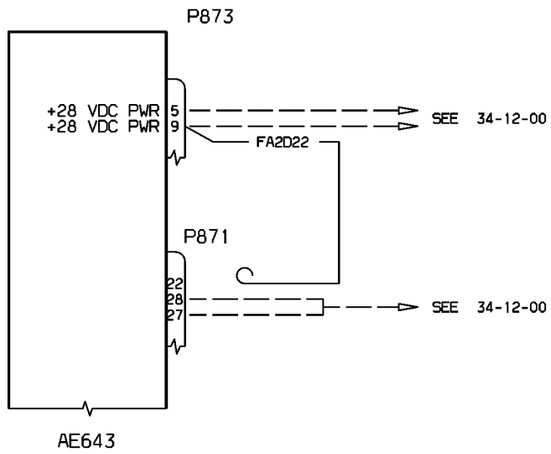
P873
+28 VDC PWR 5
+28 VDC PWR 9
SEE 34-12-00
FA2D22
P871
22
28
27
SEE 34-12-00
AE643

WM_341210KK

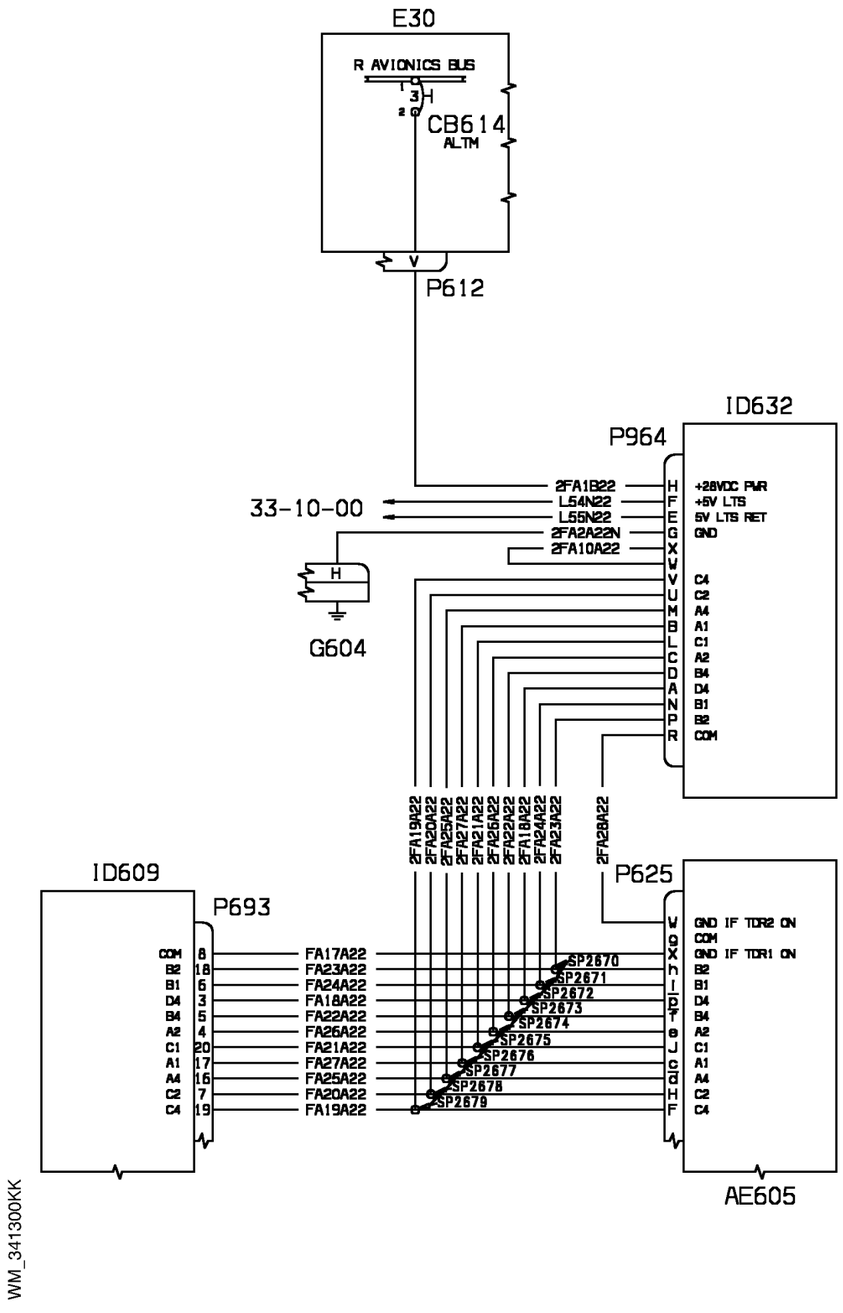


| EFFECTIVITY: | FLIGHT ENVIRONMENT DATA<br>Encoder Altimeter-Copilot (Optional) |
|---|---|

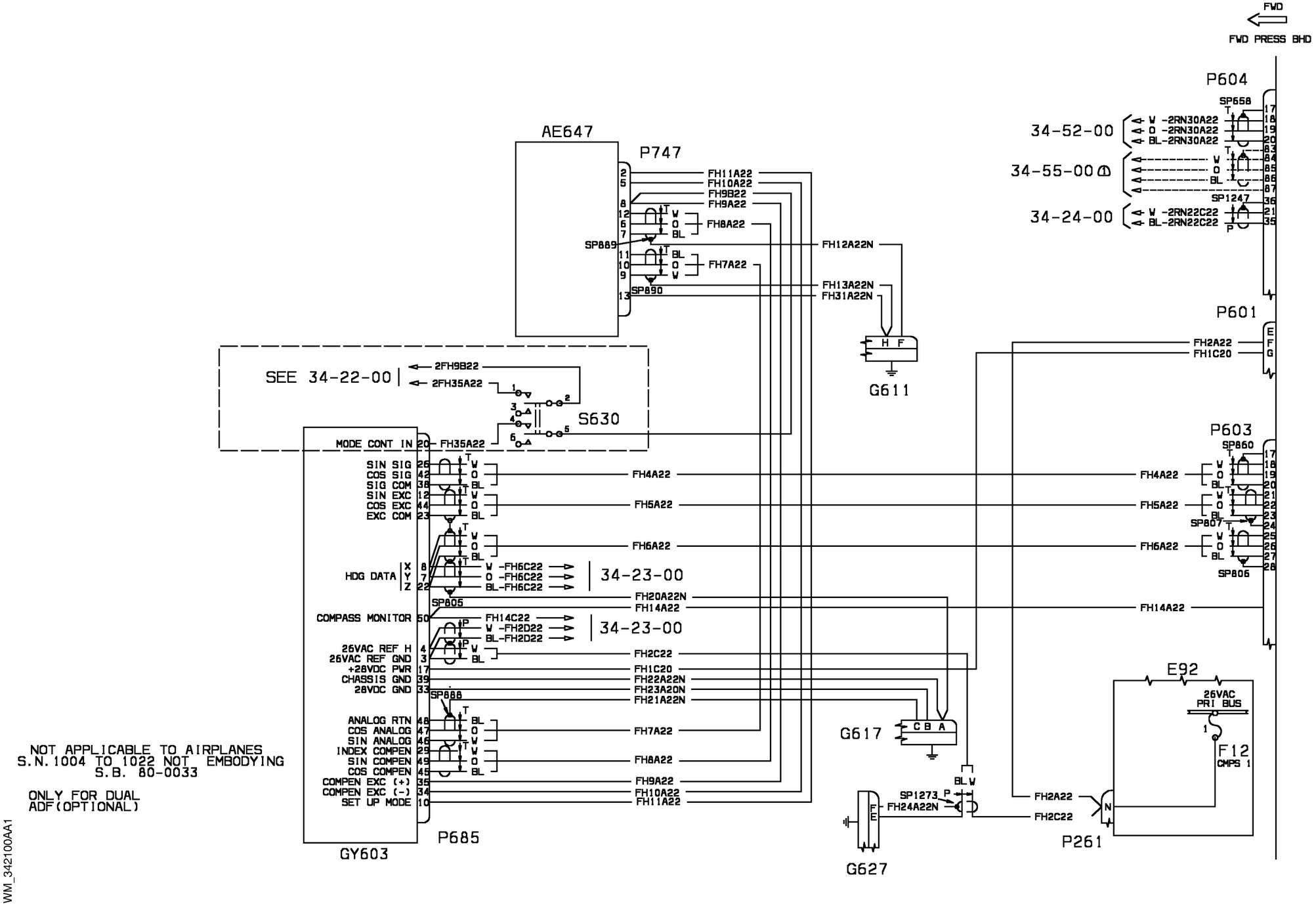


| EFFECTIVITY: | ATTITUDE & DIRECTION<br>Primary Compass & RMI |
|---|---|

**34-21-00**

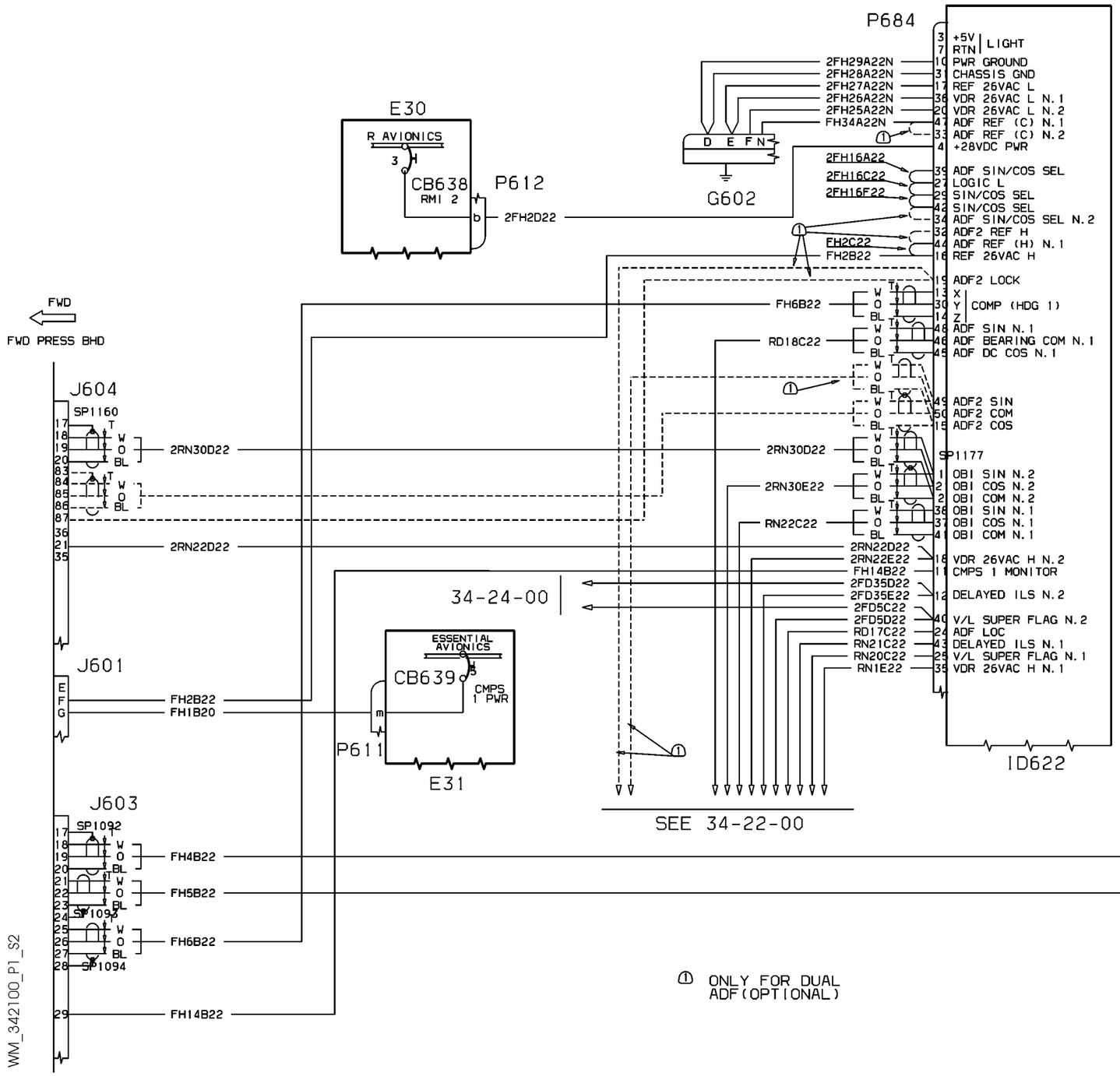


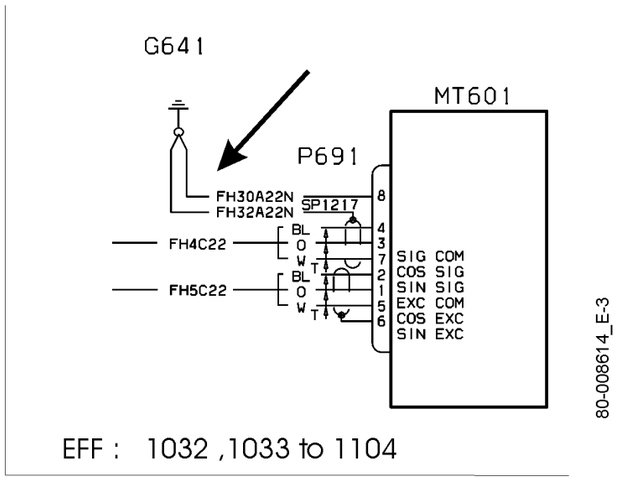


EFF : 1032 ,1033 to 1104

| EFFECTIVITY: | ATTITUDE & DIRECTION<br>Primary Compass & RMI |
|---|---|

**34-21-00**

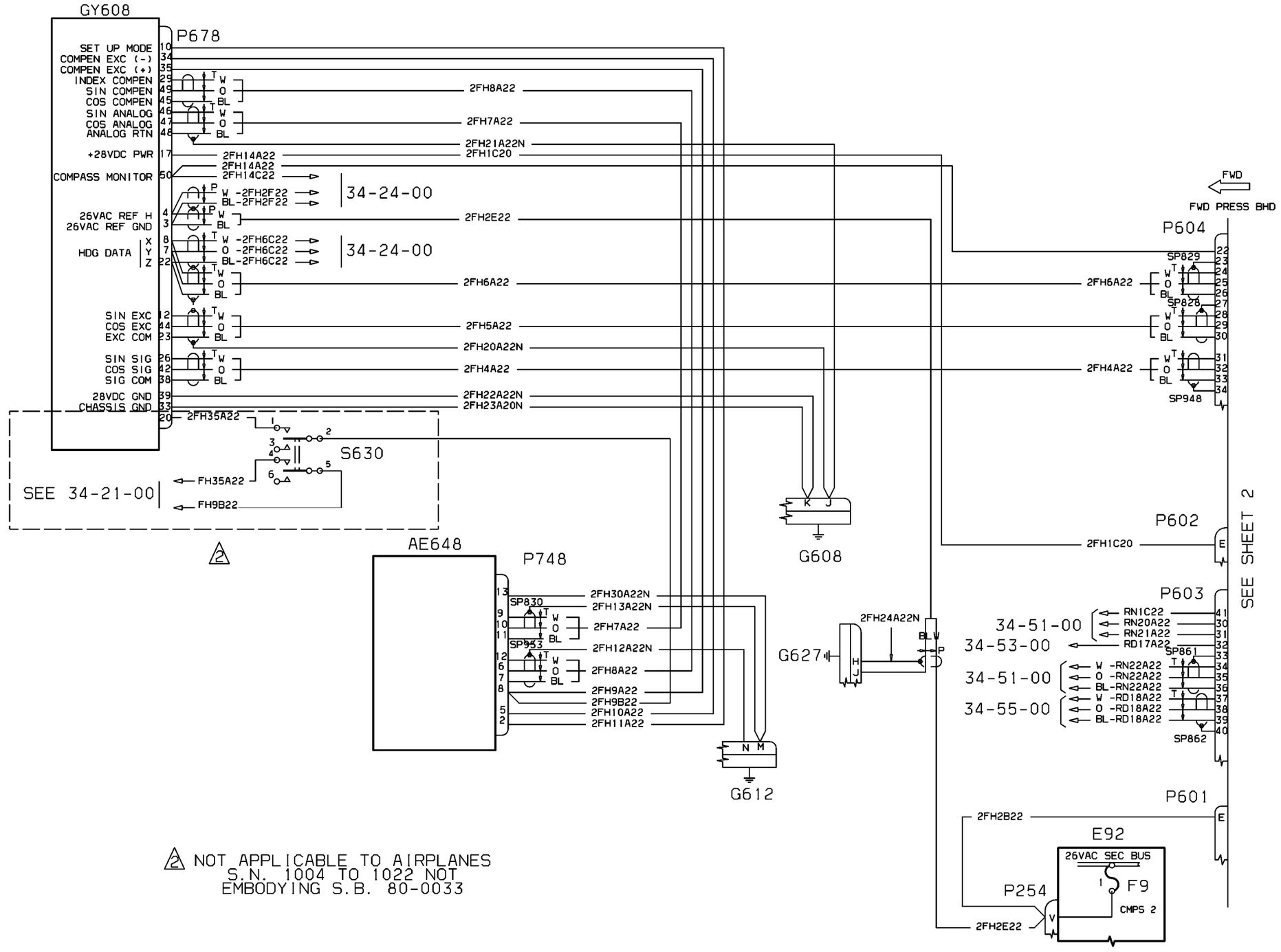


⚠2 NOT APPLICABLE TO AIRPLANES S.N. 1004 TO 1022 NOT EMBODYING S.B. 80-0033

WM_342200AA1

80-008614

| EFFECTIVITY: | ATTITUDE & DIRECTION<br>Secondary Compass & RMI |
|---|---|

**34-22-00**

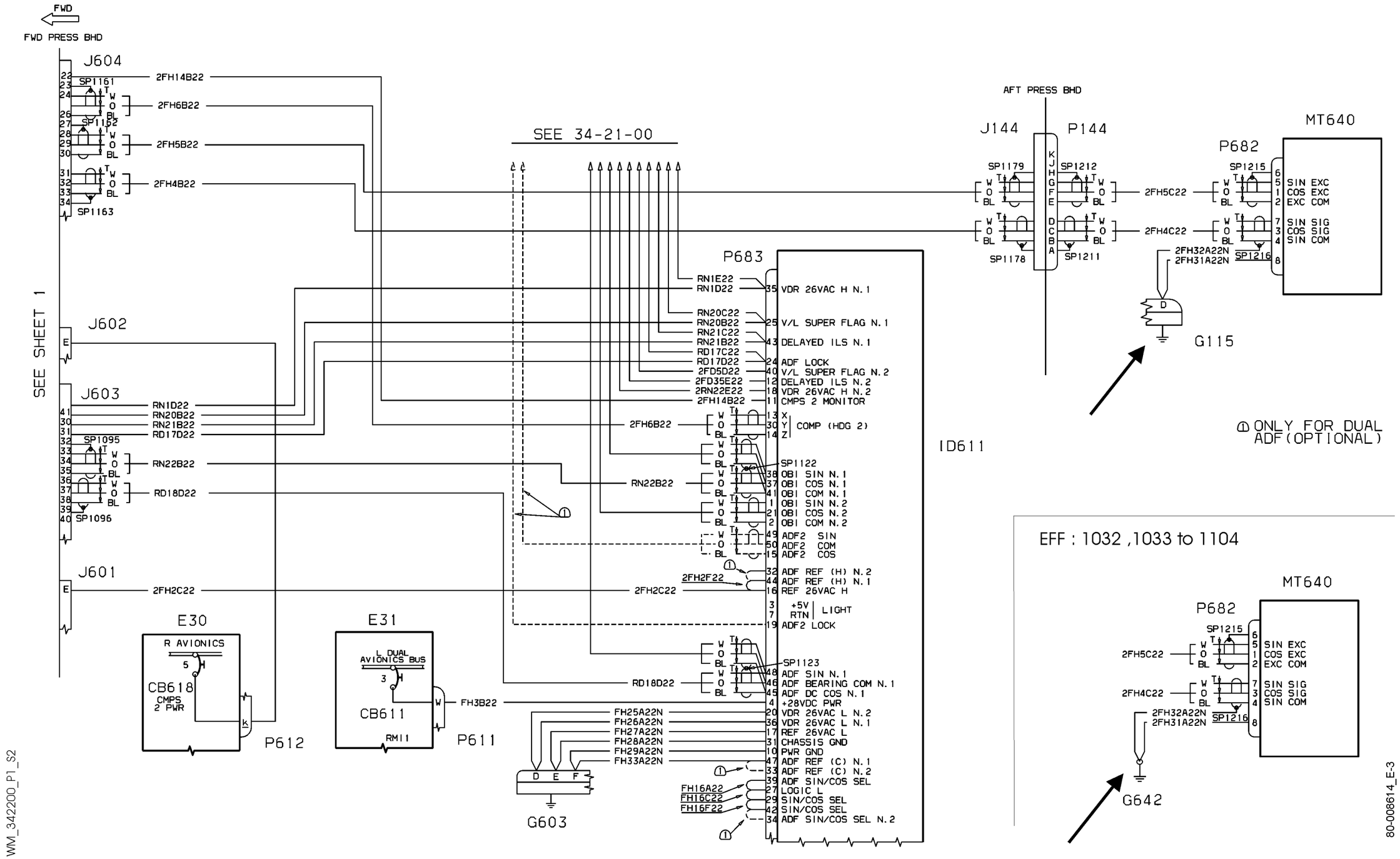


| EFFECTIVITY: | ATTITUDE & DIRECTION<br>Secondary Compass & RMI |
|---|---|

**34-22-00**

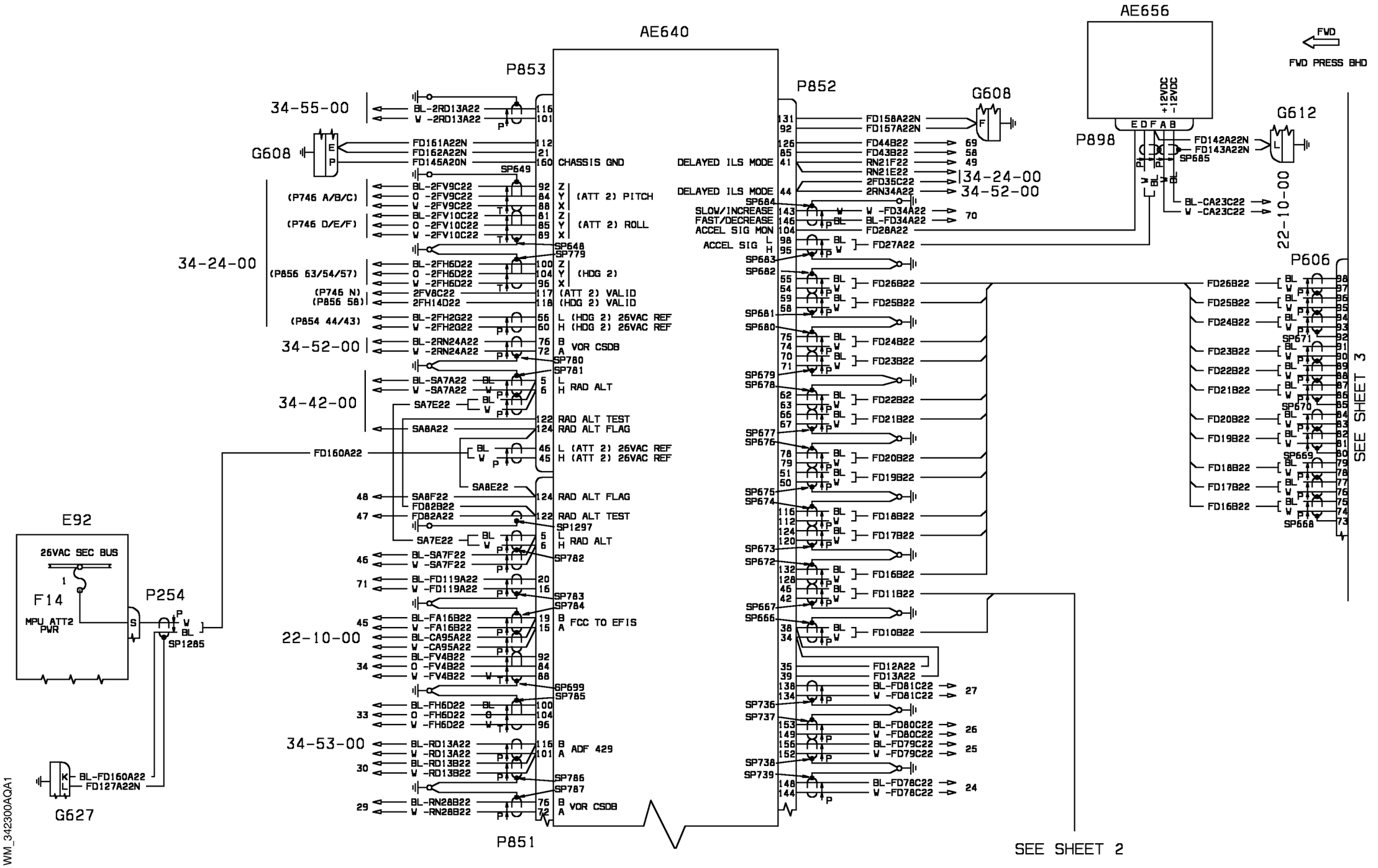


| EFFECTIVITY: | ATTITUDE & DIRECTION |
|---|---|
| 1004-1018 | Primary Flight Director (Part 1) |

**34-23-00**

NOTE: COLLINS DPU-85N P/N 622-8678-002
AND MPU-85N P/N 622-8679-002 ARE
REPLACED BY DPU P/N 622-8678-014
AND MPU P/N 622-8679-014 ON S.N.1034
AND OVER AND S.B. 80-0098 AIRPLANES

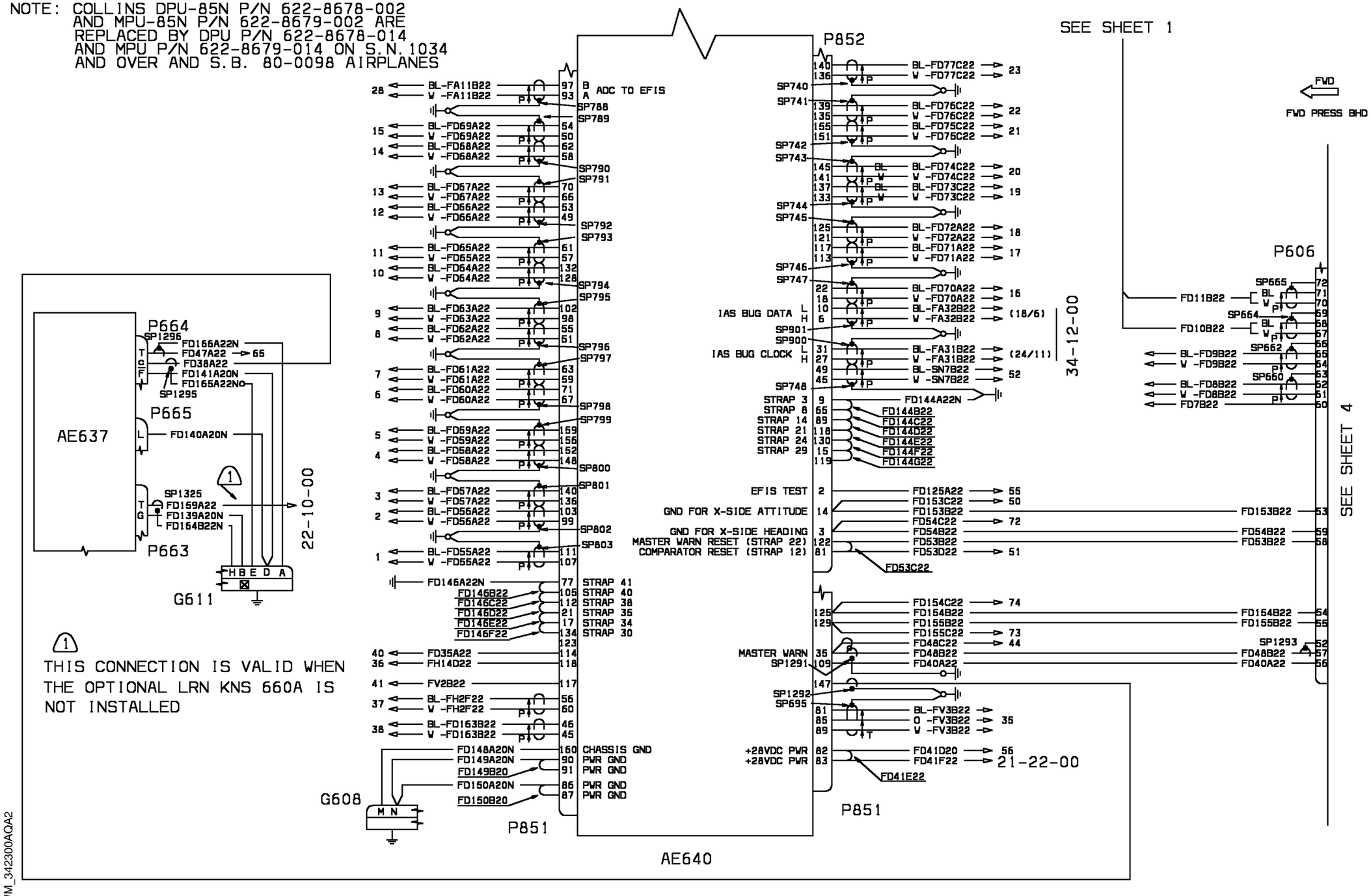


WM_342300AQA2

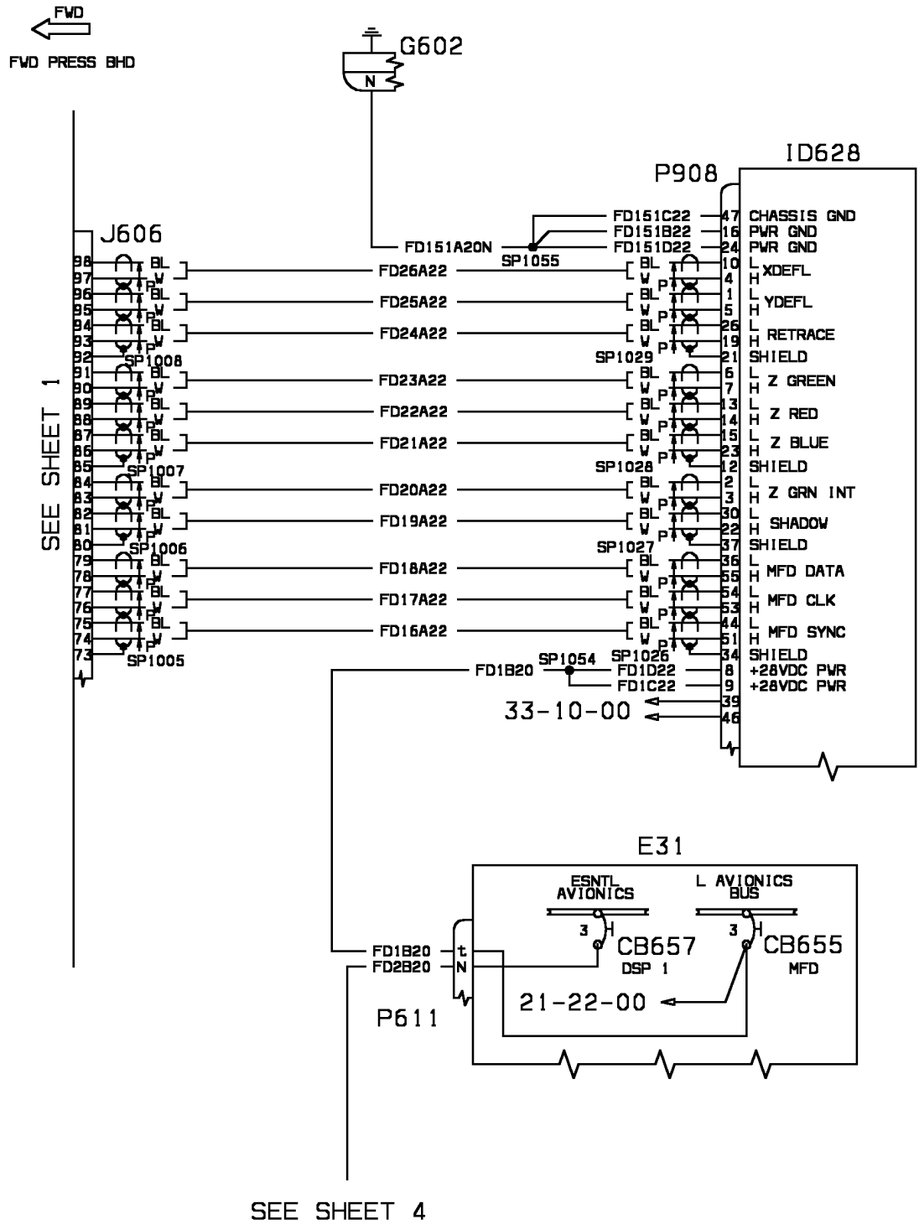


WM_342300AQA3

| EFFECTIVITY: | ATTITUDE & DIRECTION |
|---|---|
| 1004-1018 | Primary Flight Director (Part 1) |

**34-23-00**

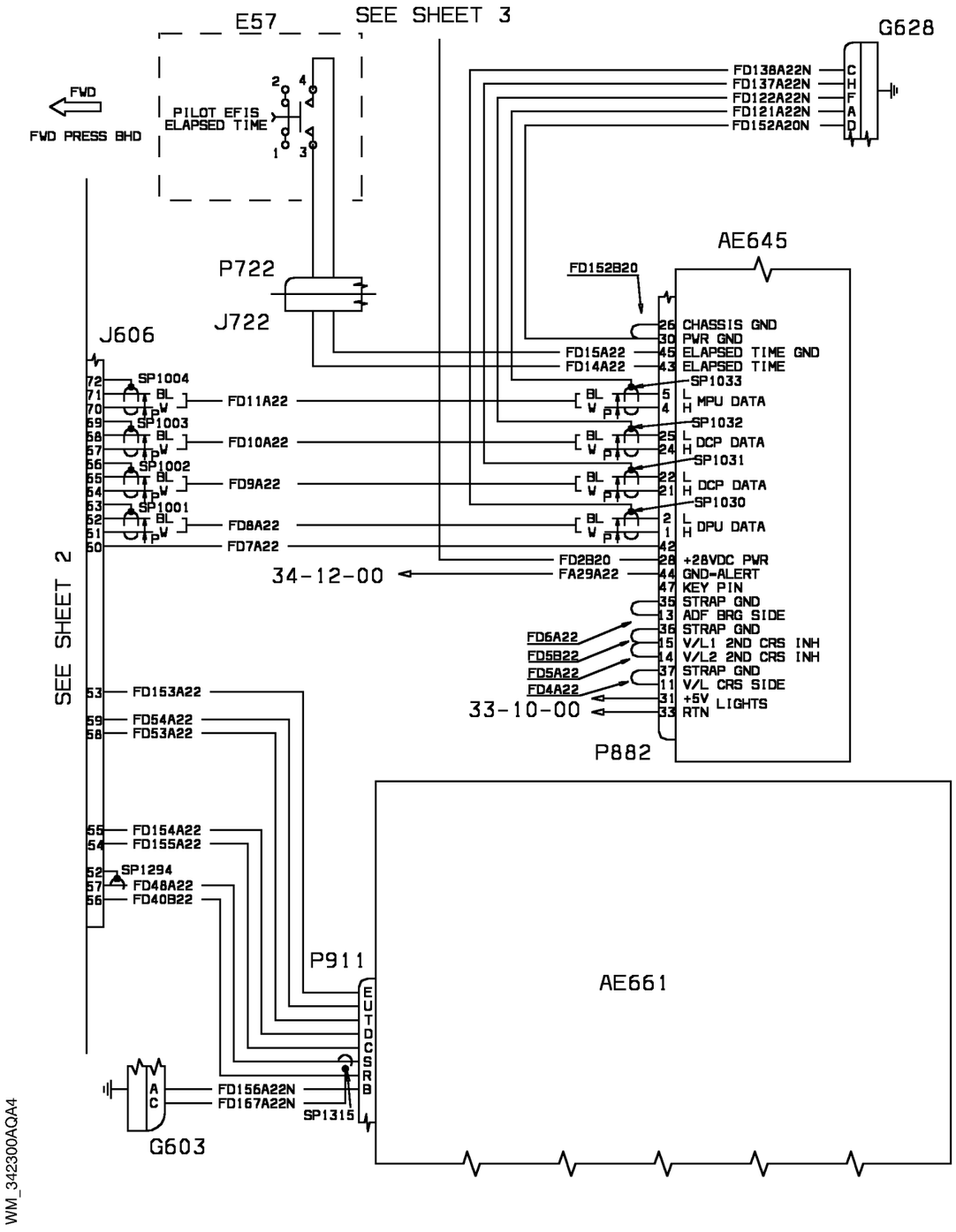


WM_342300AQA4

| EFFECTIVITY: | ATTITUDE & DIRECTION |
|---|---|
| 1004-1018 | Primary Flight Director (Part 1) |

**34-23-00**

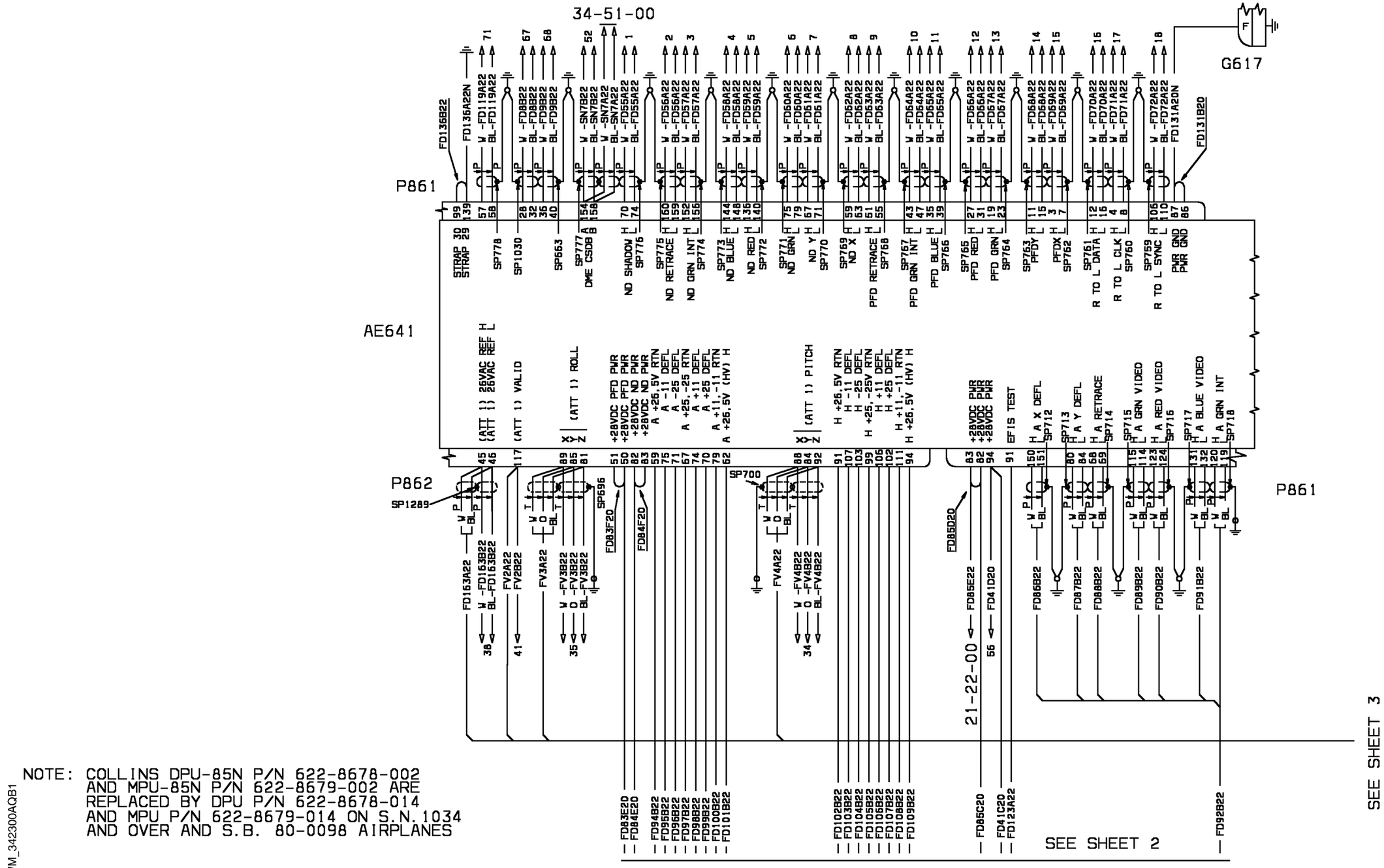


NOTE: COLLINS DPU-85N P/N 622-8678-002
AND MPU-85N P/N 622-8679-002 ARE
REPLACED BY DPU P/N 622-8678-014
AND MPU P/N 622-8679-014 ON S.N. 1034
AND OVER AND S.B. 80-0098 AIRPLANES

WM_342300AQB1

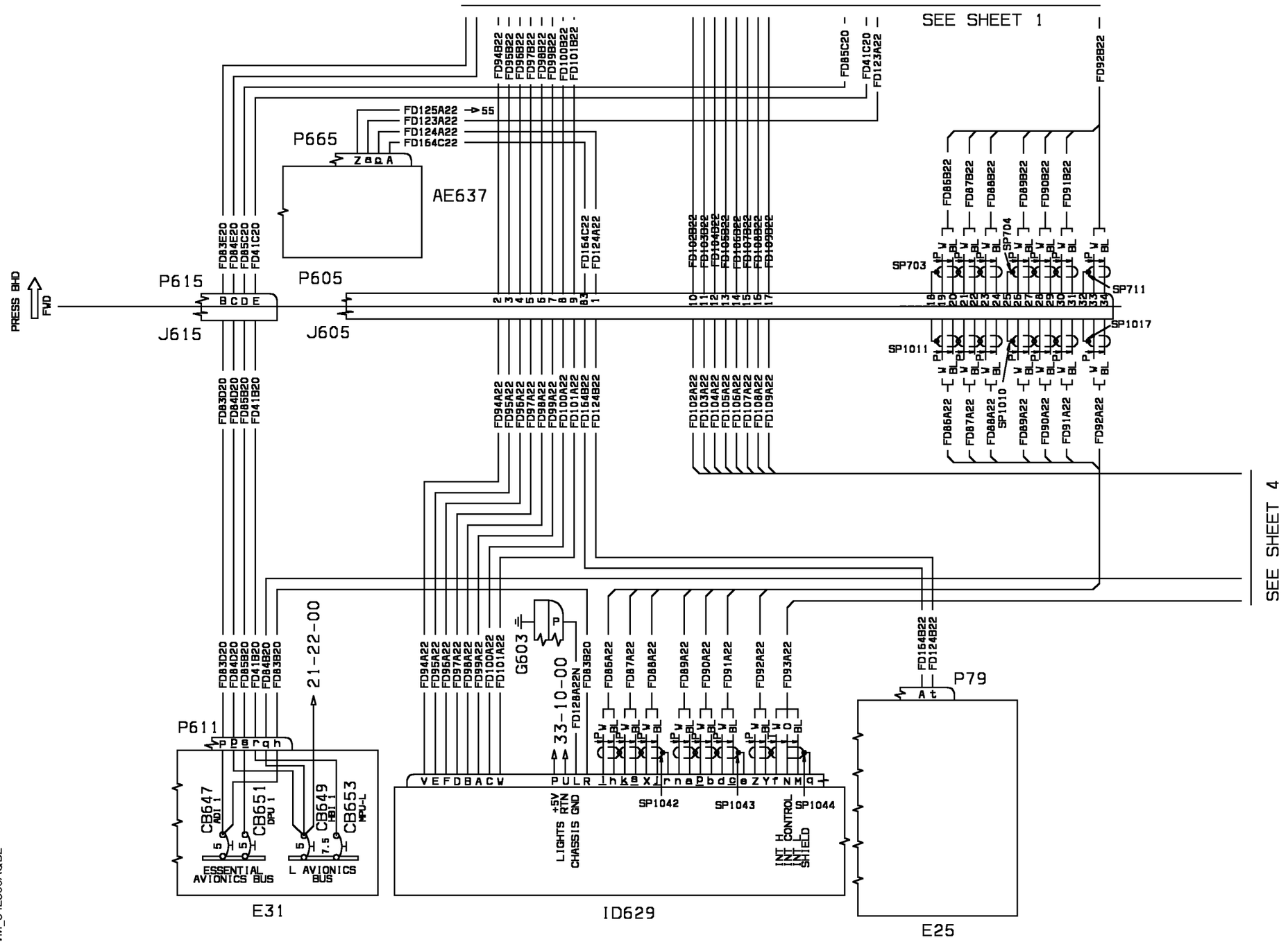


WM_342300AQB2

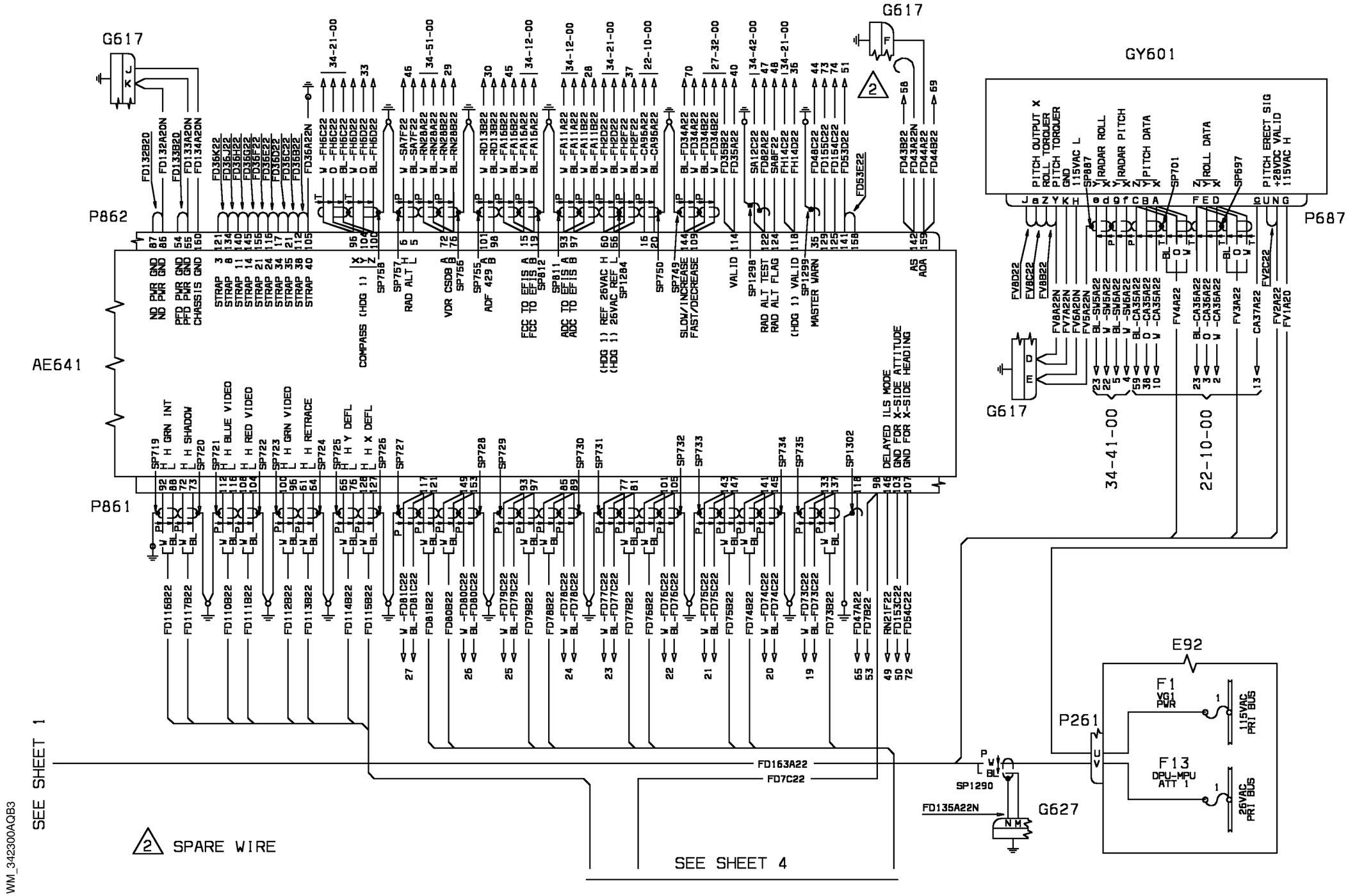


| EFFECTIVITY: 1019-1104 | ATTITUDE & DIRECTION Primary Flight Director (Part 1) |
|---|---|

34-23-00
Sheet 3 of 4
Page 2
Oct. 30/09

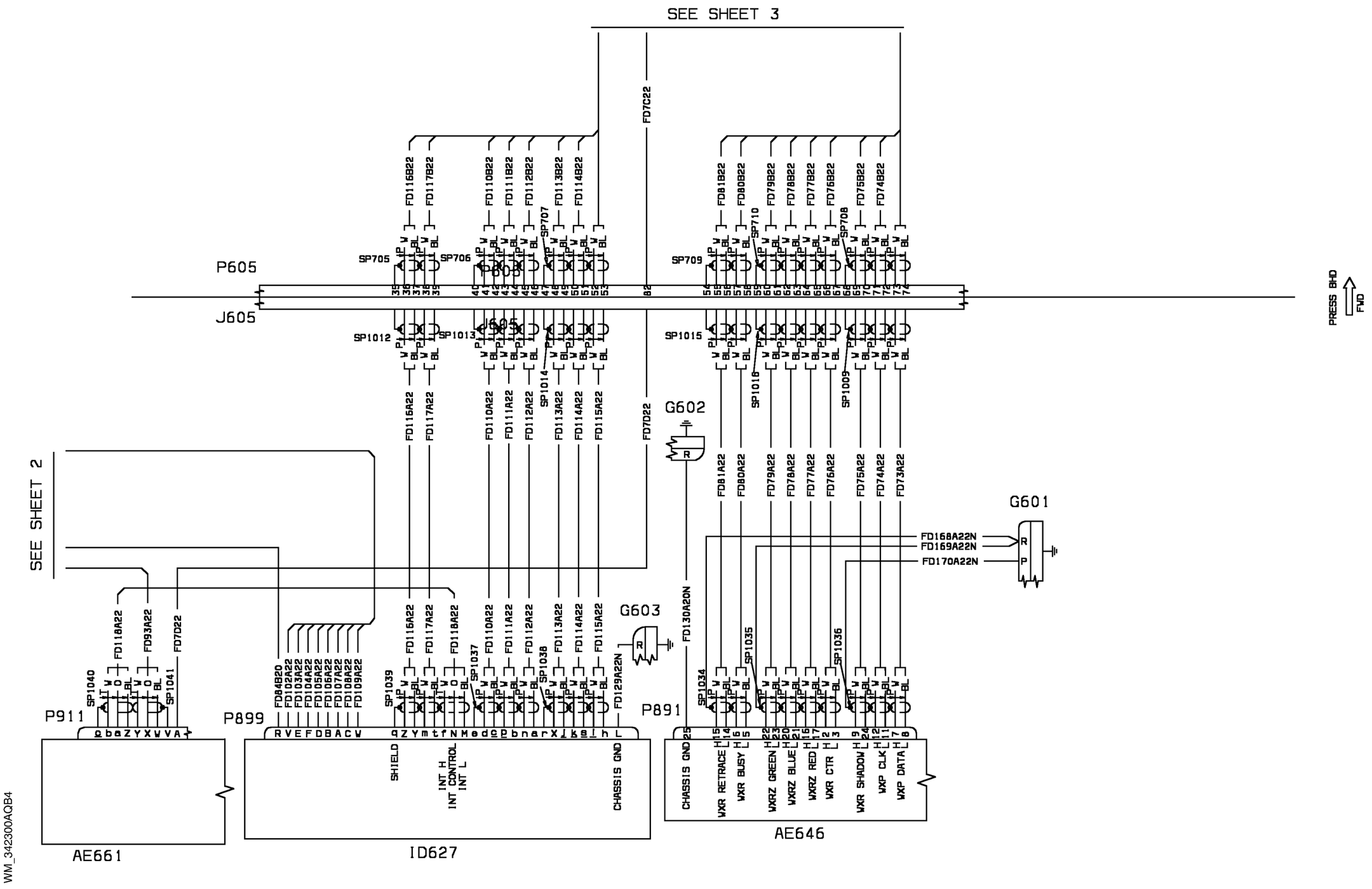


WM_342300AQB4

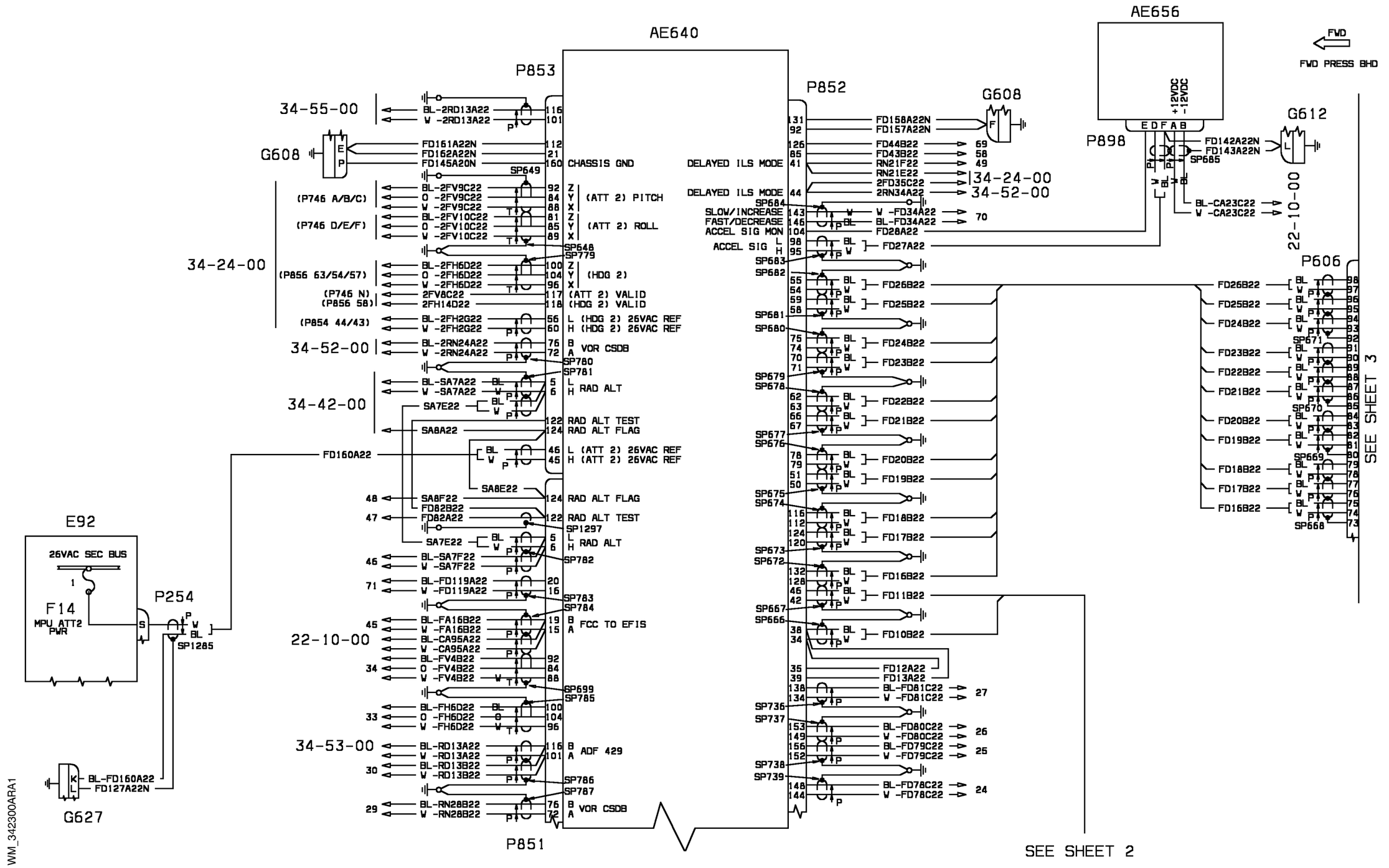
AE640
P853
34-55-00
BL-2RD13A22
W -2RD13A22
G608
FD161A22N
FD162A22N
FD145A20N
CHASSIS GND
SP649
(P746 A/B/C)
BL-2FV9C22
O -2FV9C22
W -2FV9C22
(ATT 2) PITCH
(P746 D/E/F)
BL-2FV10C22
O -2FV10C22
W -2FV10C22
(ATT 2) ROLL
34-24-00
SP648
SP779
(P856 63/54/57)
BL-2FH6D22
O -2FH6D22
W -2FH6D22
(HDG 2)
(P746 N)
(P856 58)
2FV8C22
2FH14D22
(ATT 2) VALID
(HDG 2) VALID
(P854 44/43)
BL-2FH2G22
W -2FH2G22
L (HDG 2) 26VAC REF
H (HDG 2) 26VAC REF
34-52-00
BL-2RN24A22
W -2RN24A22
B
A VOR CSDB
SP780
SP781
BL-SA7A22
W -SA7A22
L
H RAD ALT
34-42-00
SA7E22
SA8A22
RAD ALT TEST
RAD ALT FLAG
FD160A22
L (ATT 2) 26VAC REF
H (ATT 2) 26VAC REF
SA8E22
SA8F22
FD82B22
FD82A22
RAD ALT FLAG
RAD ALT TEST
SP1297
SA7E22
L
H RAD ALT
BL-SA7F22
W -SA7F22
SP782
BL-FD119A22
W -FD119A22
SP783
SP784
BL-FA16B22
W -FA16B22
BL-CA95A22
W -CA95A22
BL-FV4B22
O -FV4B22
W -FV4B22
B
A FCC TO EFIS
22-10-00
SP699
SP785
BL-FH6D22
O -FH6D22
W -FH6D22
34-53-00
BL-RD13A22
W -RD13A22
BL-RD13B22
W -RD13B22
B
A ADF 429
SP786
SP787
BL-RN28B22
W -RN28B22
B
A VOR CSDB
P851
E92
26VAC SEC BUS
F14
MPU ATT2 PWR
P254
SP1285
G627
BL-FD160A22
FD127A22N
WM_342300ARA1
P852
G608
DELAYED ILS MODE
DELAYED ILS MODE
SLOW/INCREASE
FAST/DECREASE
ACCEL SIG MON
ACCEL SIG
FD158A22N
FD157A22N
FD44B22
FD43B22
RN21F22
RN21E22
2FD35C22
2RN34A22
34-24-00
34-52-00
SP684
W -FD34A22
BL-FD34A22
70
FD28A22
FD27A22
SP683
SP682
FD26B22
FD25B22
SP681
SP680
FD24B22
FD23B22
SP679
SP678
FD22B22
FD21B22
SP677
SP676
FD20B22
FD19B22
SP675
SP674
FD18B22
FD17B22
SP673
SP672
FD16B22
FD11B22
SP667
SP666
FD10B22
FD12A22
FD13A22
BL-FD81C22
W -FD81C22
27
SP736
SP737
BL-FD80C22
W -FD80C22
BL-FD79C22
W -FD79C22
26
25
SP738
SP739
BL-FD78C22
W -FD78C22
24
SEE SHEET 2
AE656
FWD
FWD PRESS BHD
+12VDC
-12VDC
E D F A B
P898
FD142A22N
FD143A22N
SP685
BL-CA23C22
W -CA23C22
G612
22-10-00
P606
FD26B22
FD25B22
FD24B22
SP671
FD23B22
FD22B22
FD21B22
SP670
FD20B22
FD19B22
FD18B22
FD17B22
FD16B22
SP669
SP668
SEE SHEET 3

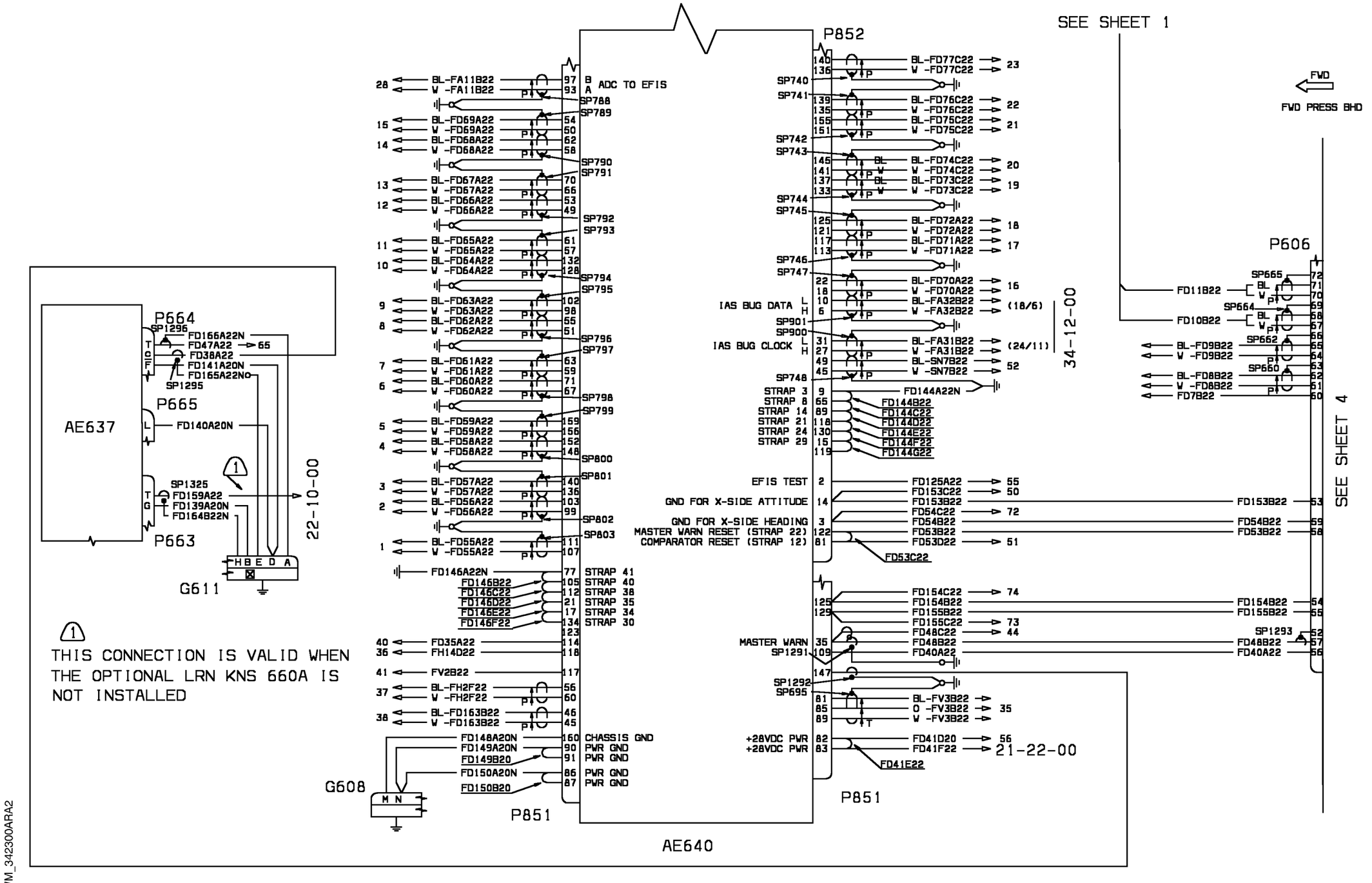


WM_342300ARA2

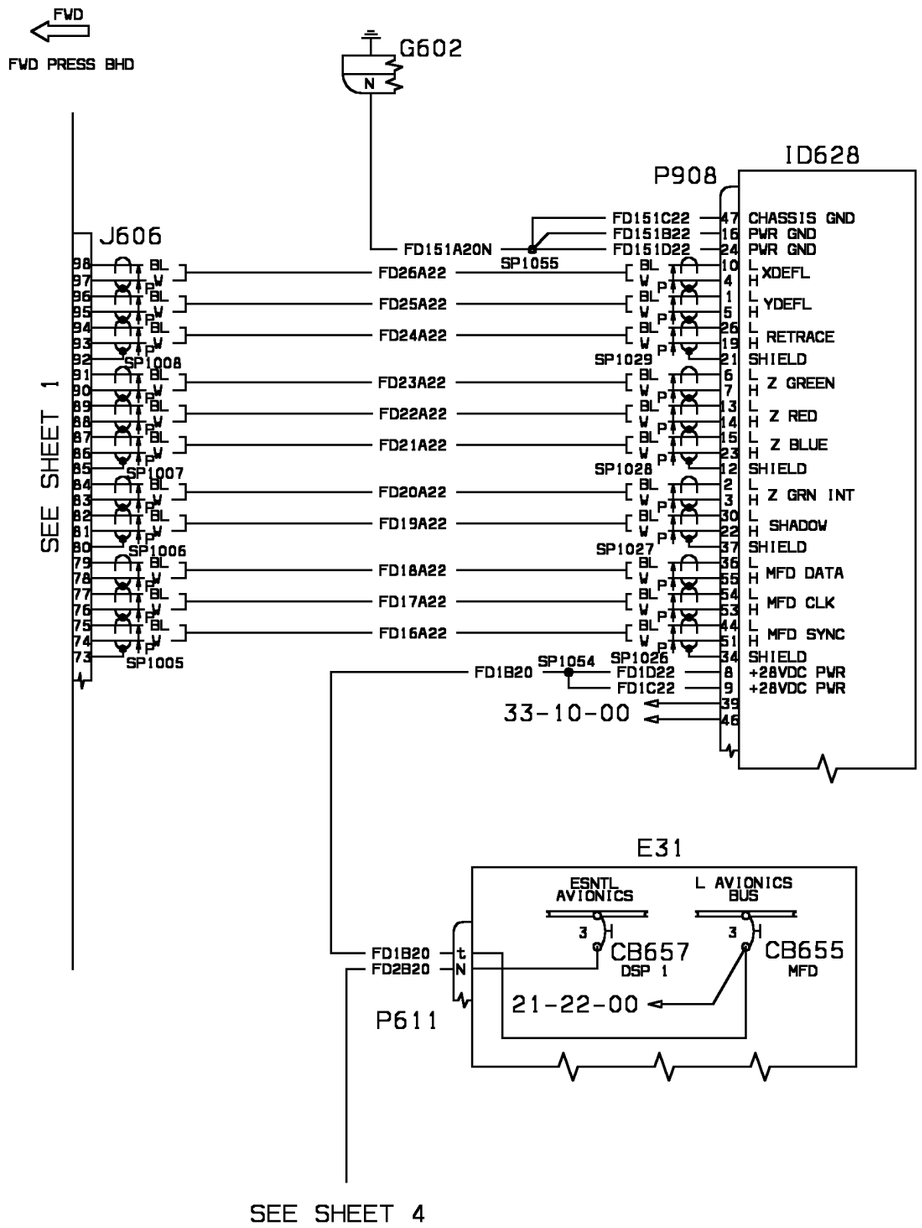
FWD
FWD PRESS BHD
G602
N
ID628
P908
J606
SEE SHEET 1
FD151A20N
SP1055
FD151C22
FD151B22
FD151D22
47 CHASSIS GND
16 PWR GND
24 PWR GND
FD26A22
FD25A22
FD24A22
FD23A22
FD22A22
FD21A22
FD20A22
FD19A22
FD18A22
FD17A22
FD16A22
10 XDEFL
4
1 YDEFL
5
26 RETRACE
19
21 SHIELD
6 Z GREEN
7
13 Z RED
14
15 Z BLUE
23
12 SHIELD
2 Z GRN INT
3
30 SHADOW
22
37 SHIELD
36 MFD DATA
55
54 MFD CLK
53
44 MFD SYNC
51
34 SHIELD
SP1008
SP1007
SP1006
SP1005
SP1029
SP1028
SP1027
SP1026
SP1054
FD1B20
FD1D22
FD1C22
8 +28VDC PWR
9 +28VDC PWR
39
46
33-10-00
E31
ESNTL AVIONICS
L AVIONICS BUS
CB657
DSP 1
CB655
MFD
21-22-00
P611
FD2B20
SEE SHEET 4
WM_342300ARA3

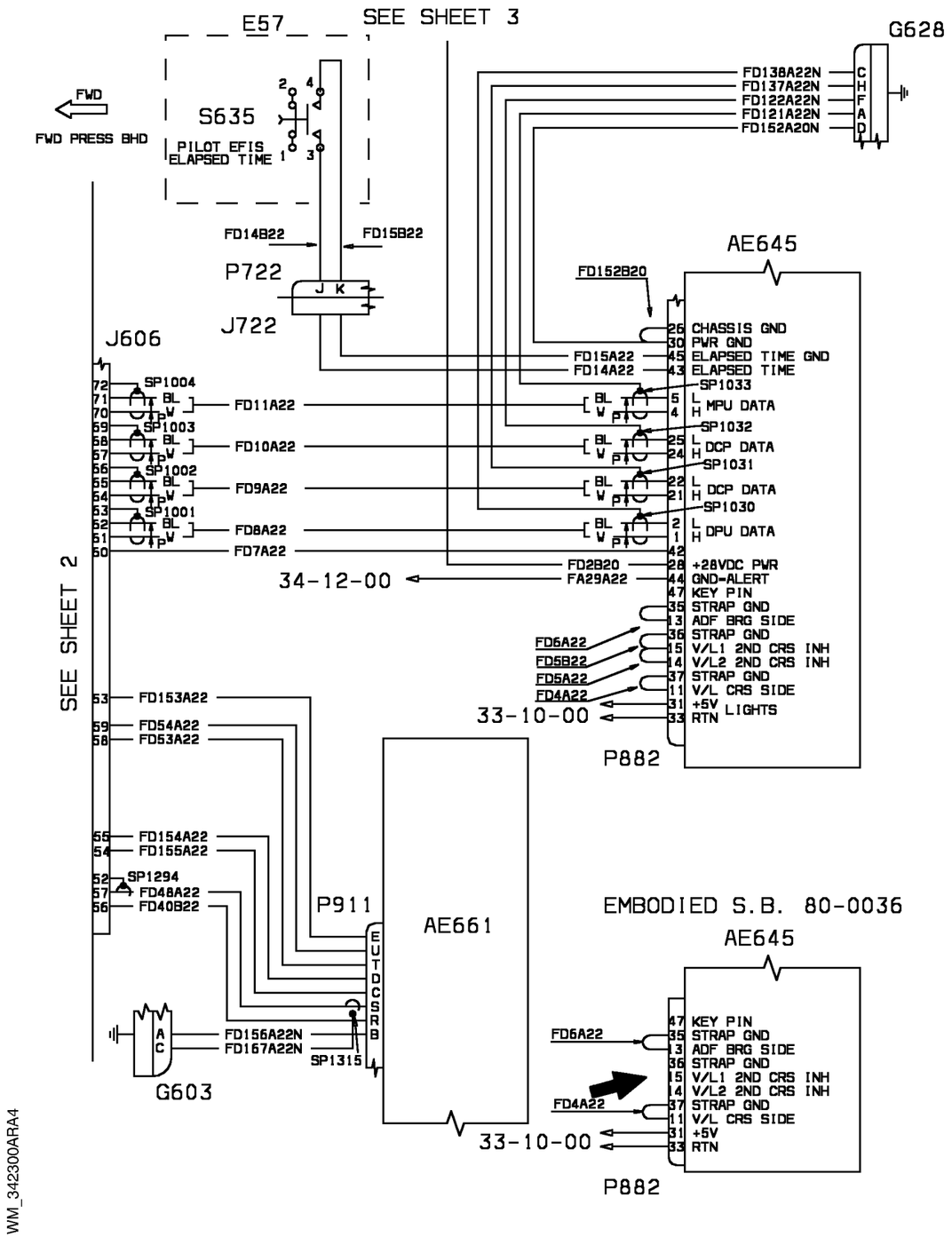
E57
SEE SHEET 3
G628
FD138A22N C
FD137A22N H
FD122A22N F
FD121A22N A
FD152A20N D
FWD
FWD PRESS BHD
S635
PILOT EFIS
ELAPSED TIME
FD14B22
FD15B22
P722
J722
J K
AE645
FD152B20
J606
26 CHASSIS GND
30 PWR GND
FD15A22 45 ELAPSED TIME GND
FD14A22 43 ELAPSED TIME
SP1033
SP1004
FD11A22
5 L
4 H MPU DATA
SP1032
SP1003
FD10A22
25 L
24 H DCP DATA
SP1031
SP1002
FD9A22
22 L
21 H DCP DATA
SP1030
SP1001
FD8A22
2 L
1 H DPU DATA
FD7A22
42
FD2B20 28 +28VDC PWR
FA29A22 44 GND-ALERT
47 KEY PIN
35 STRAP GND
13 ADF BRG SIDE
FD6A22
36 STRAP GND
FD5B22 15 V/L1 2ND CRS INH
FD5A22 14 V/L2 2ND CRS INH
37 STRAP GND
FD4A22 11 V/L CRS SIDE
31 +5V
33 RTN LIGHTS
34-12-00
33-10-00
P882
SEE SHEET 2
FD153A22
FD54A22
FD53A22
FD154A22
FD155A22
SP1294
FD48A22
FD40B22
P911
AE661
E U T D C S R B
FD156A22N
FD167A22N
SP1315
G603
EMBODIED S.B. 80-0036
AE645
47 KEY PIN
35 STRAP GND
13 ADF BRG SIDE
36 STRAP GND
15 V/L1 2ND CRS INH
14 V/L2 2ND CRS INH
37 STRAP GND
11 V/L CRS SIDE
31 +5V
33 RTN
FD6A22
FD4A22
33-10-00
P882
WM_342300ARA4

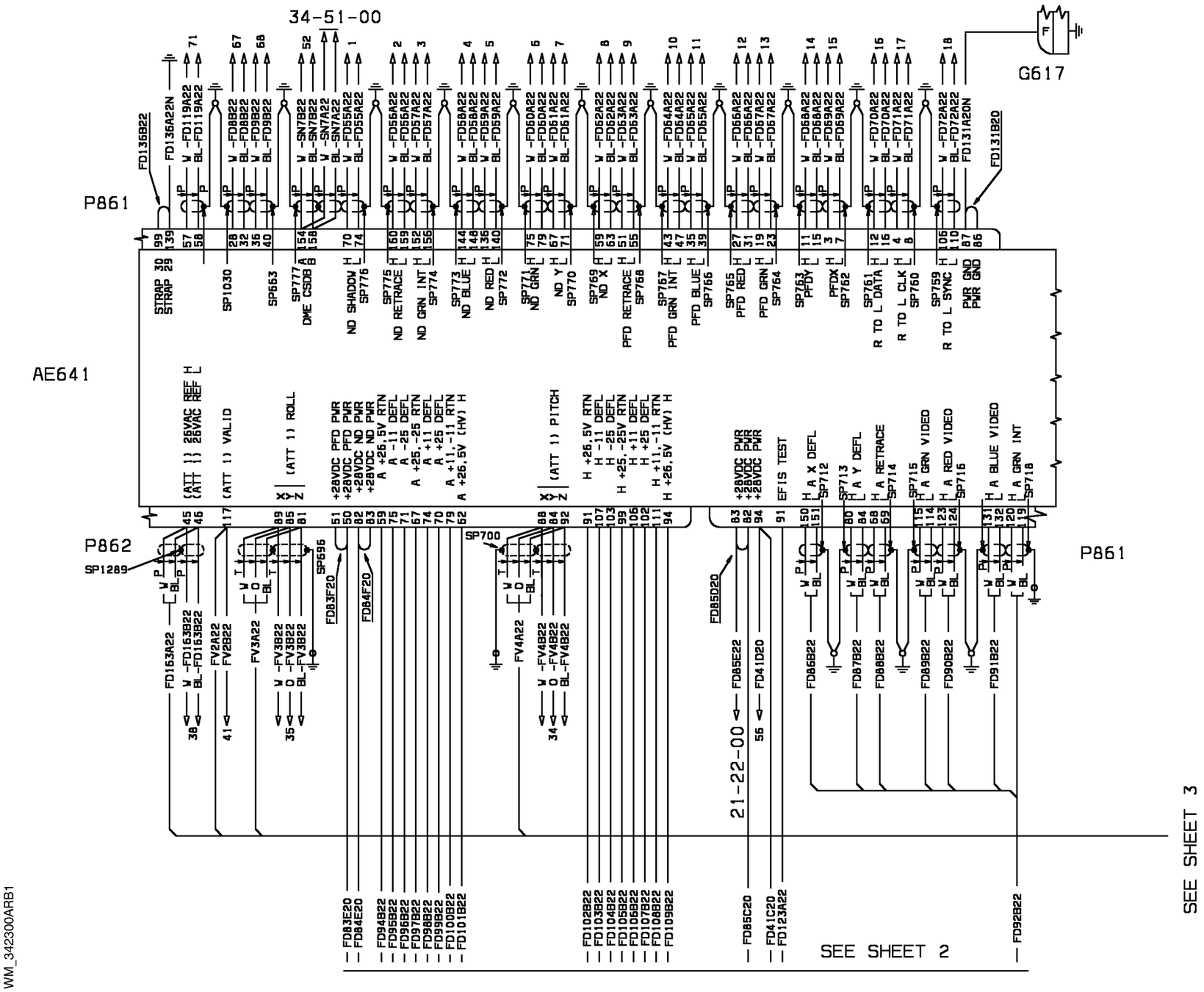


WM_342300ARB1

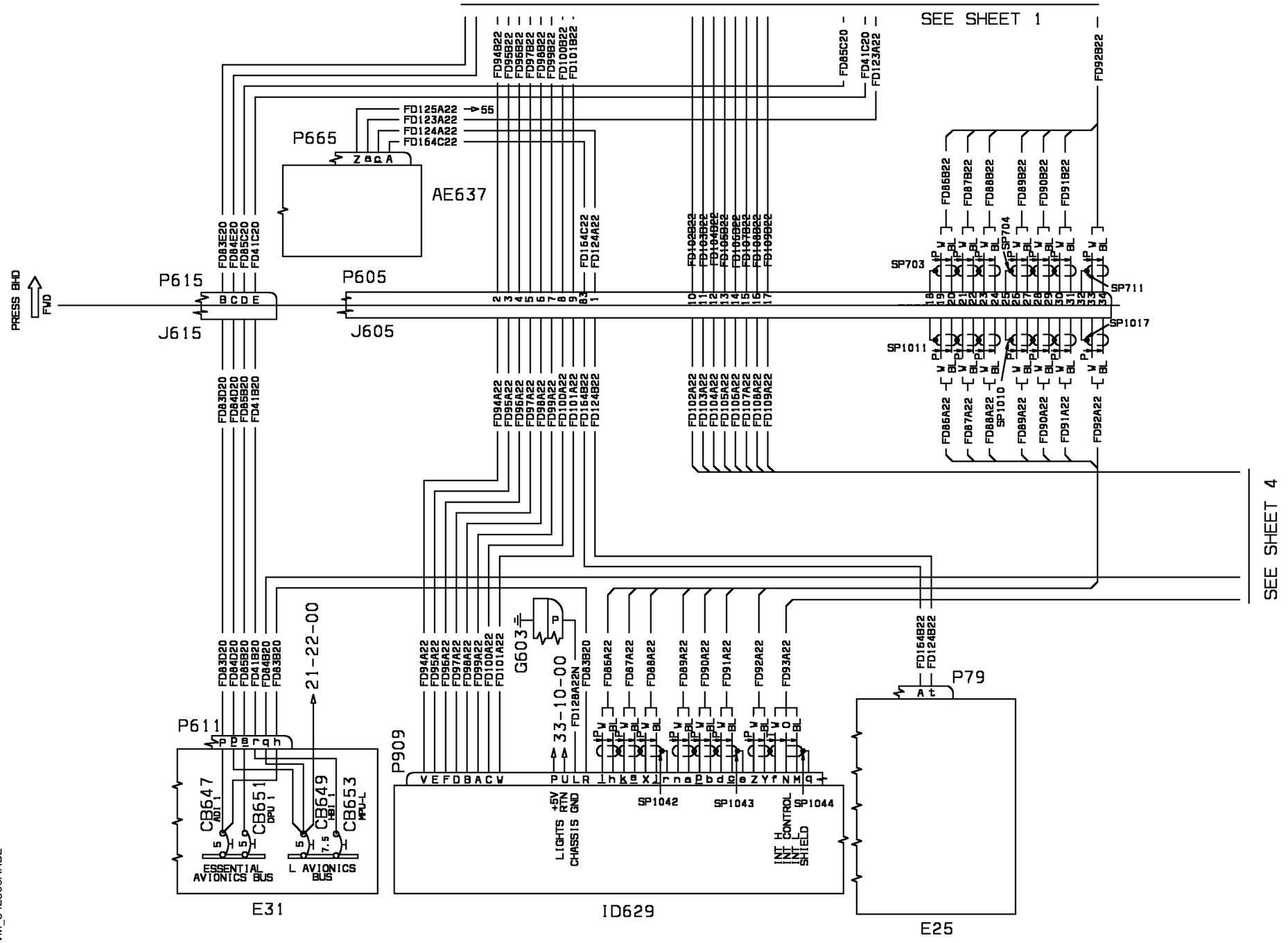


WM_342300ARB2

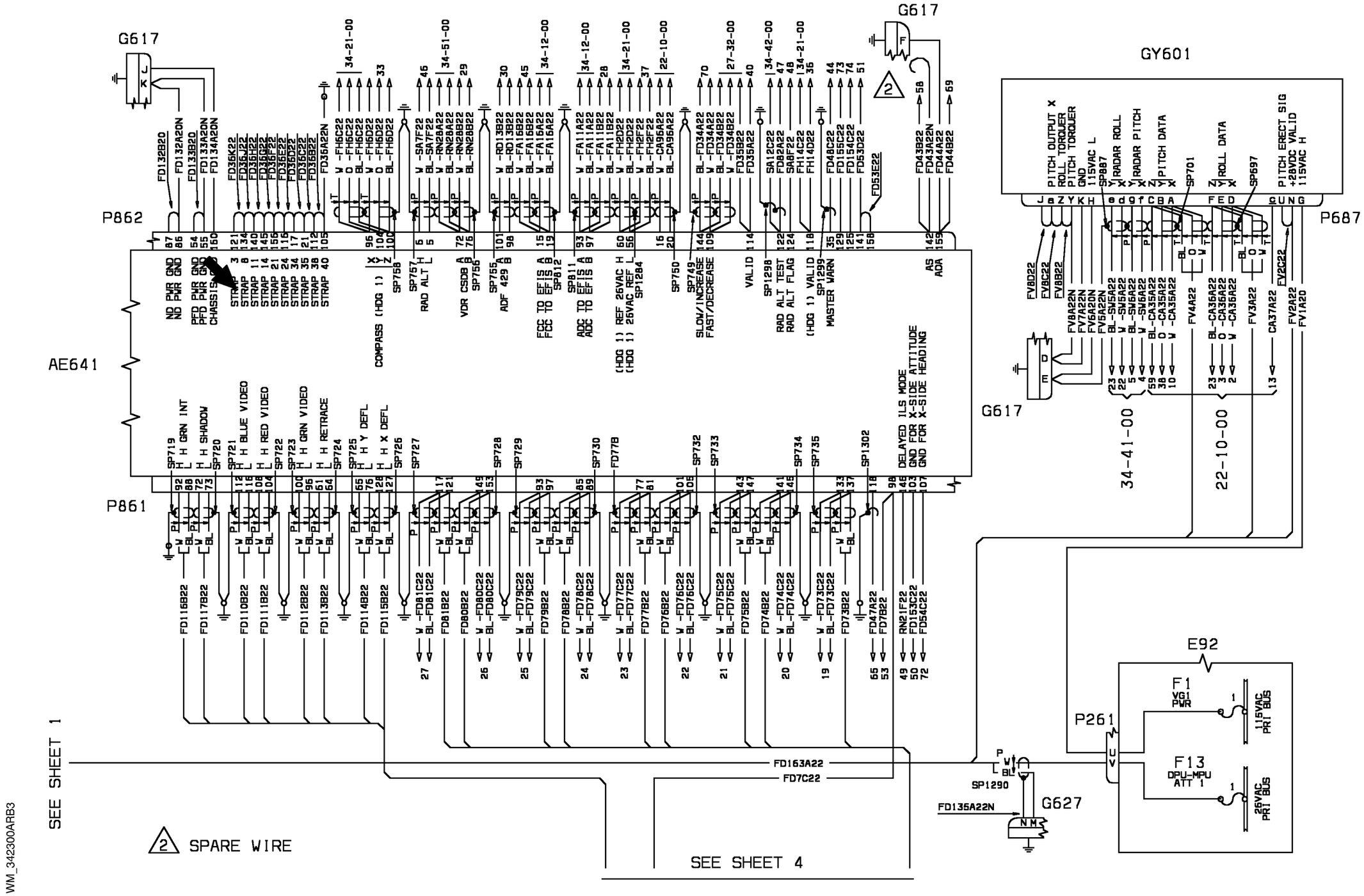
G617
P862
AE641
P861
SEE SHEET 1
SEE SHEET 4
SPARE WIRE
GY601
P687
G617
P261
E92
G627
SP1290
FD135A22N
FD163A22
FD7C22
WM_342300ARB3

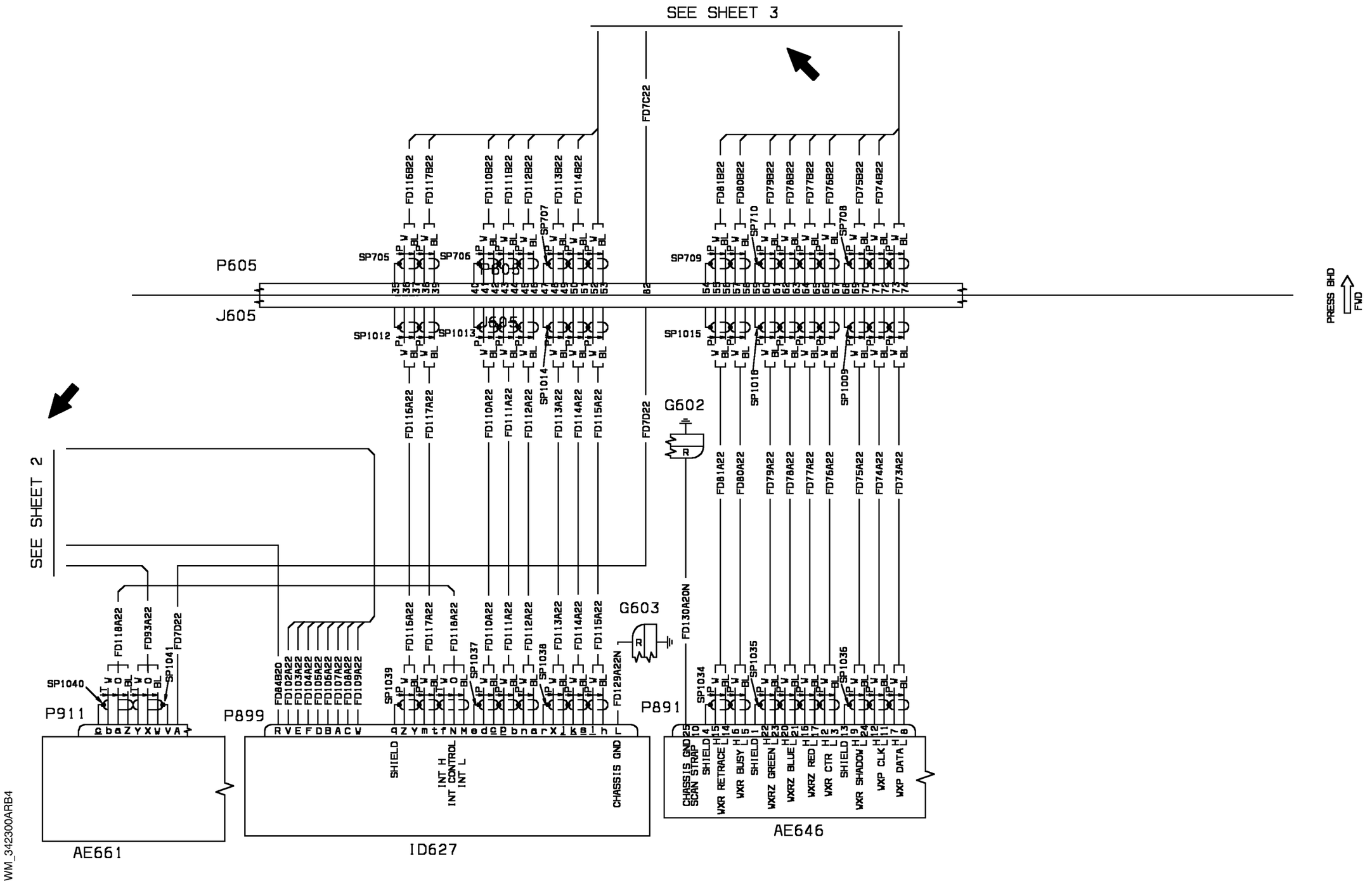


WM_342300ARB4

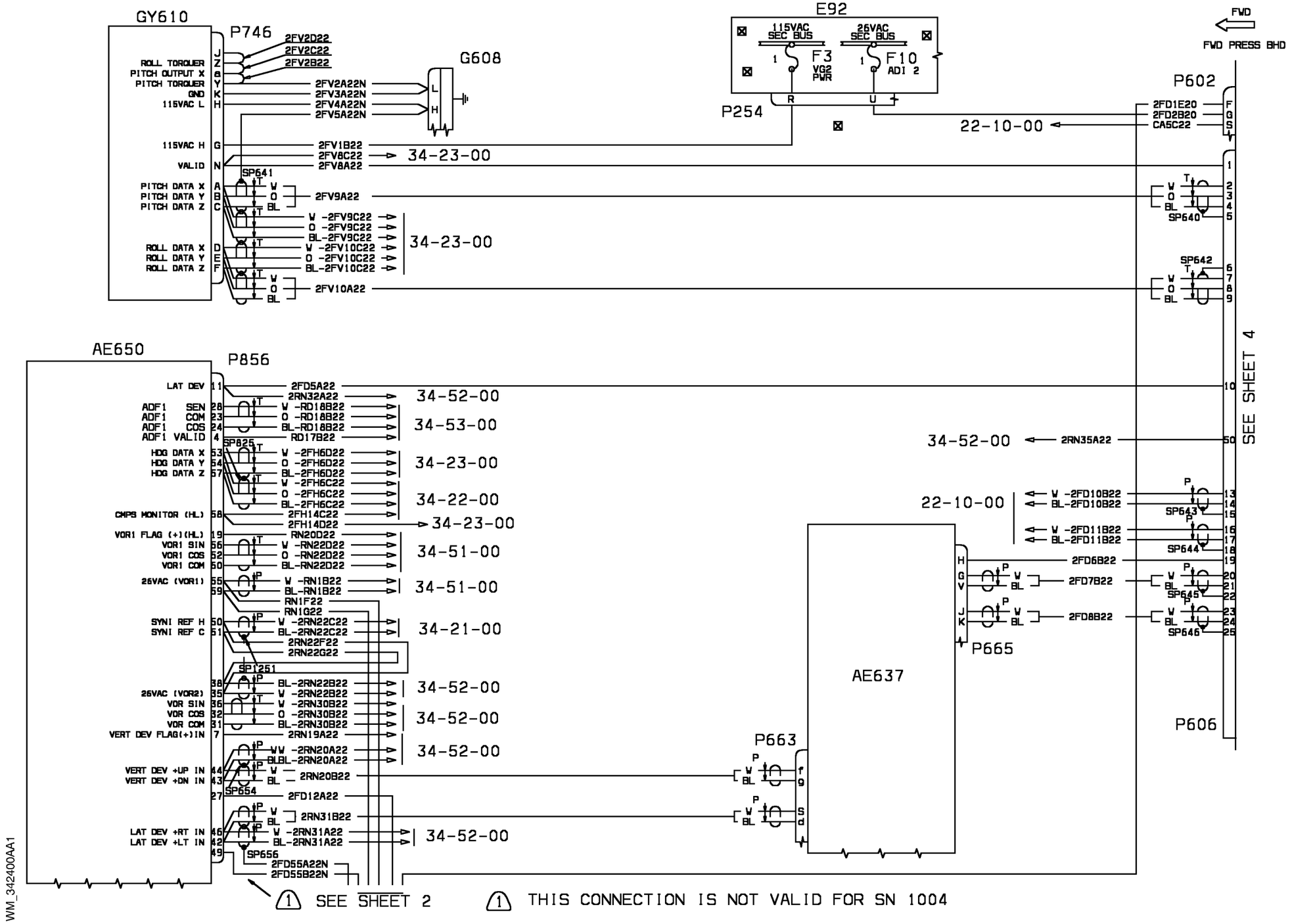


WM_342400AA1

| EFFECTIVITY: | ATTITUDE & DIRECTION<br>Flight Director |
|---|---|

**34-24-00**

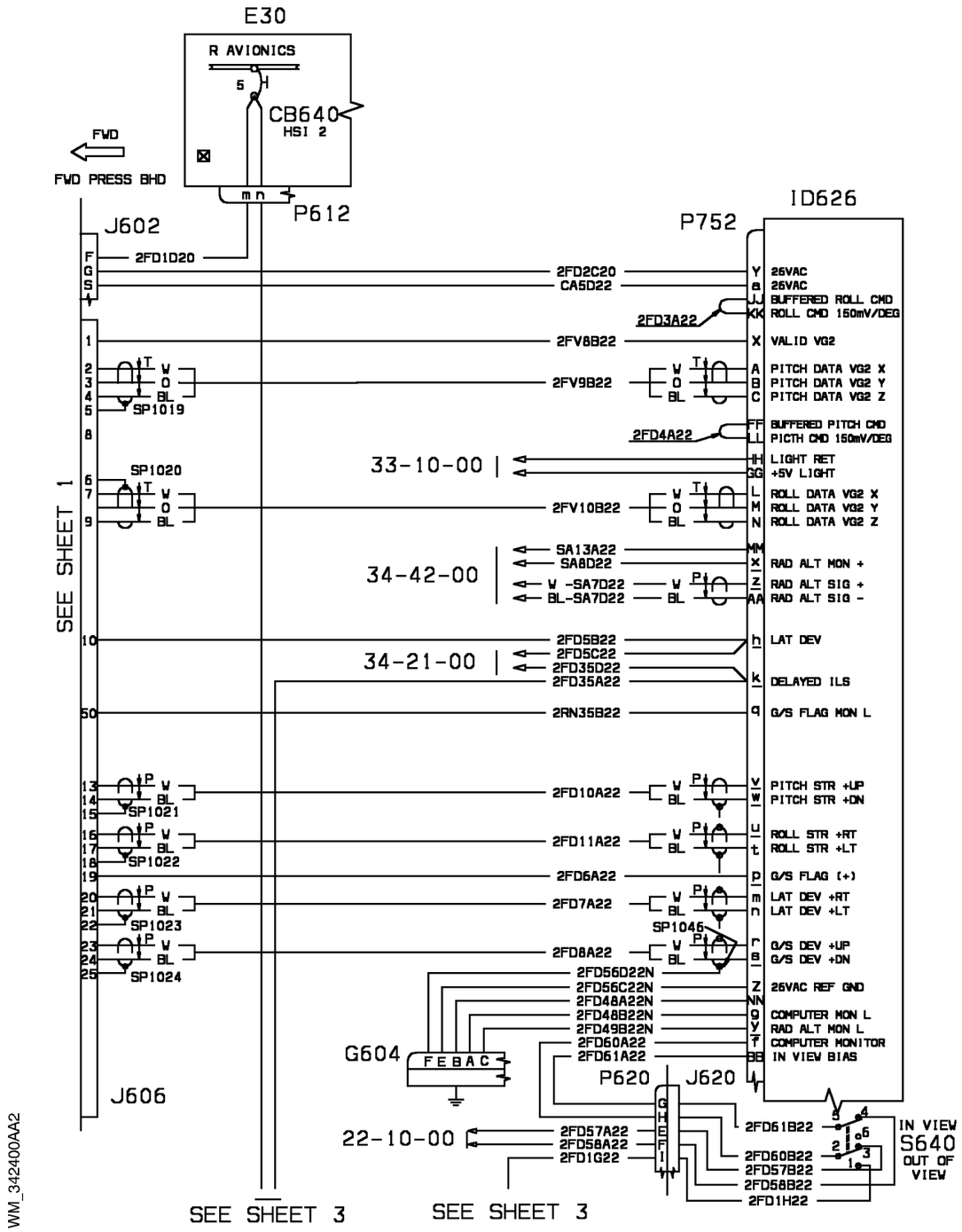


| EFFECTIVITY: | ATTITUDE & DIRECTION<br>Flight Director |
|---|---|

**34-24-00**

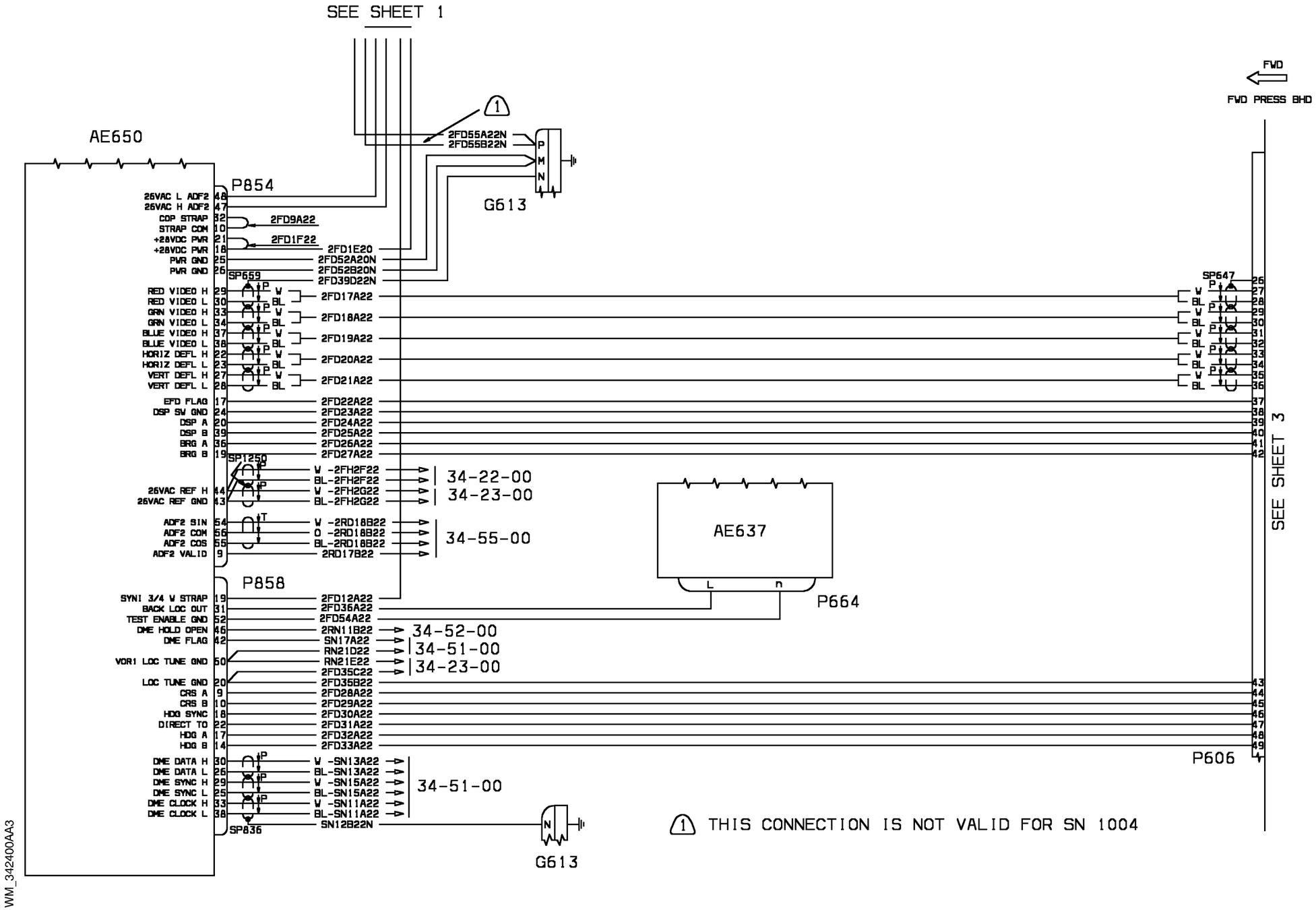
SEE SHEET 1
AE650
P854
25VAC L ADF2 48
25VAC H ADF2 47
COP STRAP 32
STRAP COM 10
+28VDC PWR 21
+28VDC PWR 18
PWR GND 25
PWR GND 26
2FD9A22
2FD1F22
2FD1E20
2FD52A20N
2FD52B20N
2FD39D22N
SP659
RED VIDEO H 29
RED VIDEO L 30
GRN VIDEO H 33
GRN VIDEO L 34
BLUE VIDEO H 37
BLUE VIDEO L 38
HORIZ DEFL H 22
HORIZ DEFL L 23
VERT DEFL H 27
VERT DEFL L 28
2FD17A22
2FD18A22
2FD19A22
2FD20A22
2FD21A22
EFD FLAG 17
DSP SW GND 24
DSP A 20
DSP B 39
BRG A 36
BRG B 19
2FD22A22
2FD23A22
2FD24A22
2FD25A22
2FD26A22
2FD27A22
SP1250
25VAC REF H 44
25VAC REF GND 43
W -2FH2F22
BL-2FH2F22
W -2FH2G22
BL-2FH2G22
34-22-00
34-23-00
ADF2 SIN 54
ADF2 COM 56
ADF2 COS 55
ADF2 VALID 9
W -2RD18B22
O -2RD18B22
BL-2RD18B22
2RD17B22
34-55-00
P858
SYNI 3/4 W STRAP 19
BACK LOC OUT 31
TEST ENABLE GND 52
DME HOLD OPEN 45
DME FLAG 42
VOR1 LOC TUNE GND 50
LOC TUNE GND 20
CRS A 9
CRS B 10
HDG SYNC 18
DIRECT TO 22
HDG A 17
HDG B 14
2FD12A22
2FD36A22
2FD54A22
2RN11B22
SN17A22
RN21D22
RN21E22
2FD35C22
2FD35B22
2FD28A22
2FD29A22
2FD30A22
2FD31A22
2FD32A22
2FD33A22
34-52-00
34-51-00
34-23-00
DME DATA H 30
DME DATA L 25
DME SYNC H 29
DME SYNC L 25
DME CLOCK H 33
DME CLOCK L 38
W -SN13A22
BL-SN13A22
W -SN15A22
BL-SN15A22
W -SN11A22
BL-SN11A22
34-51-00
SP836
SN12B22N
G613
2FD55A22N
2FD55B22N
G613
AE637
L
n
P664
FWD
FWD PRESS BHD
SP647
P606
SEE SHEET 3
1 THIS CONNECTION IS NOT VALID FOR SN 1004
WM_342400AA3

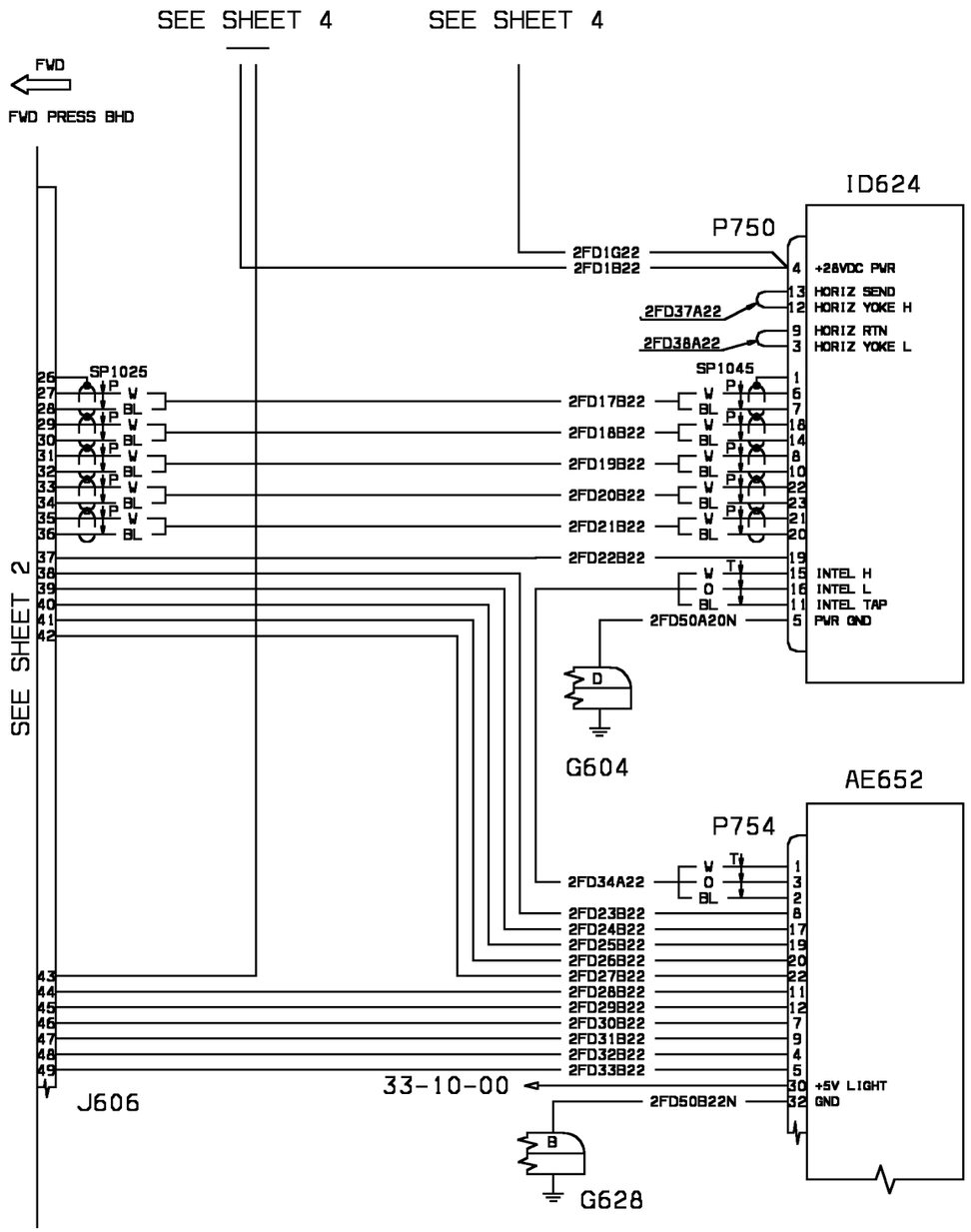


| EFFECTIVITY: | ATTITUDE & DIRECTION<br>Flight Director |
|---|---|

**34-24-00**

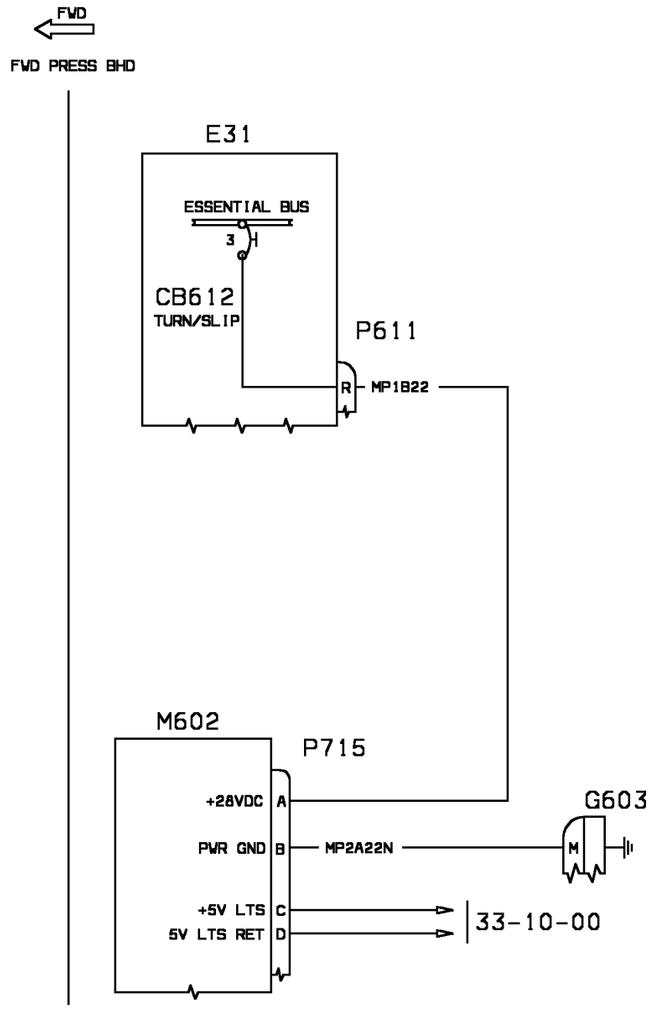
FWD
FWD PRESS BHD
E31
ESSENTIAL BUS
3
H
CB612
TURN/SLIP
P611
R
MP1B22
M602
P715
+28VDC
A
PWR GND
B
MP2A22N
G603
M
+5V LTS
C
5V LTS RET
D
33-10-00

WM_342500AE

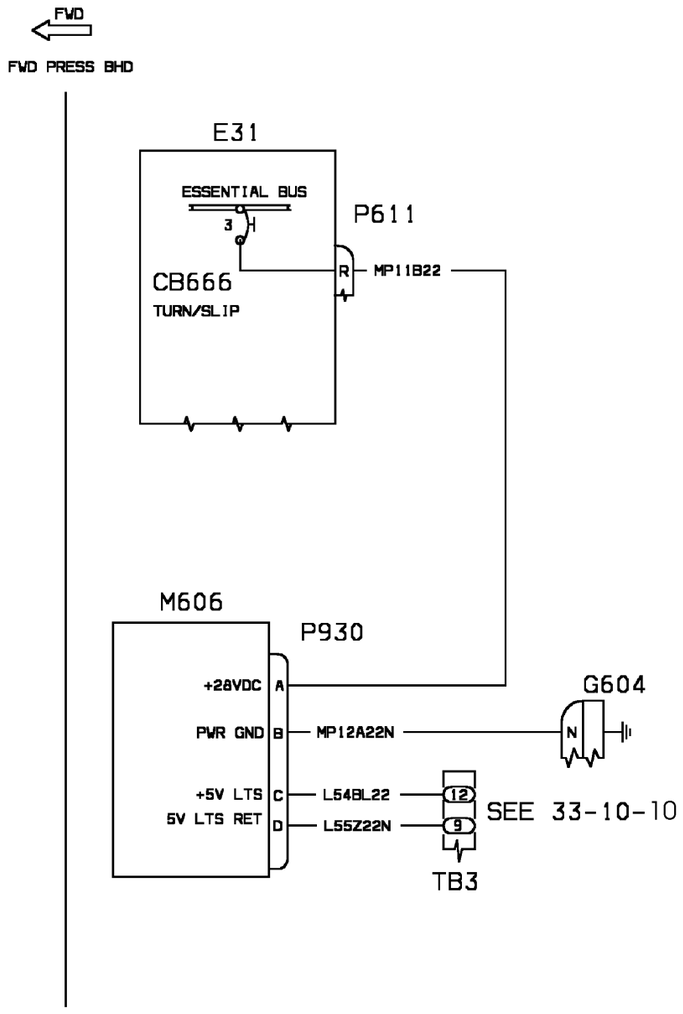
FWD
FWD PRESS BHD
E31
ESSENTIAL BUS
3
H
P611
R
MP11B22
CB666
TURN/SLIP
M606
P930
+28VDC
A
PWR GND
B
MP12A22N
G604
N
+5V LTS
C
L54BL22
12
5V LTS RET
D
L55Z22N
9
SEE 33-10-10
TB3

WM_342600KK

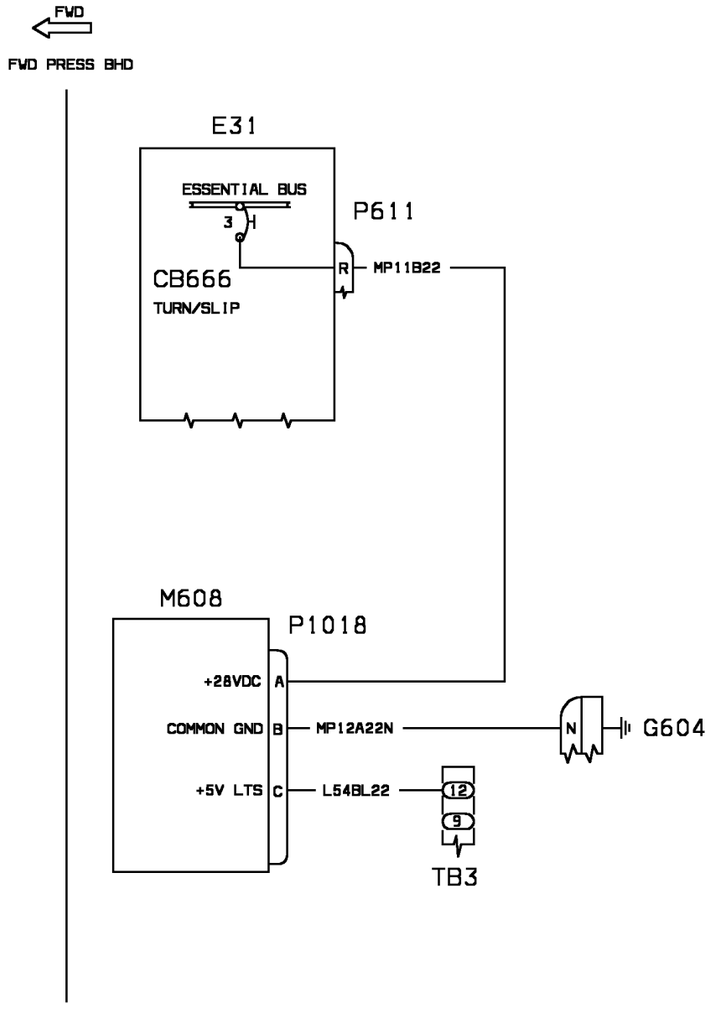
FWD
FWD PRESS BHD
E31
ESSENTIAL BUS
3
H
P611
CB666
TURN/SLIP
R
MP11B22
M608
P1018
+28VDC
A
COMMON GND
B
MP12A22N
N
G604
+5V LTS
C
L54BL22
12
9
TB3

WM_342600JJ

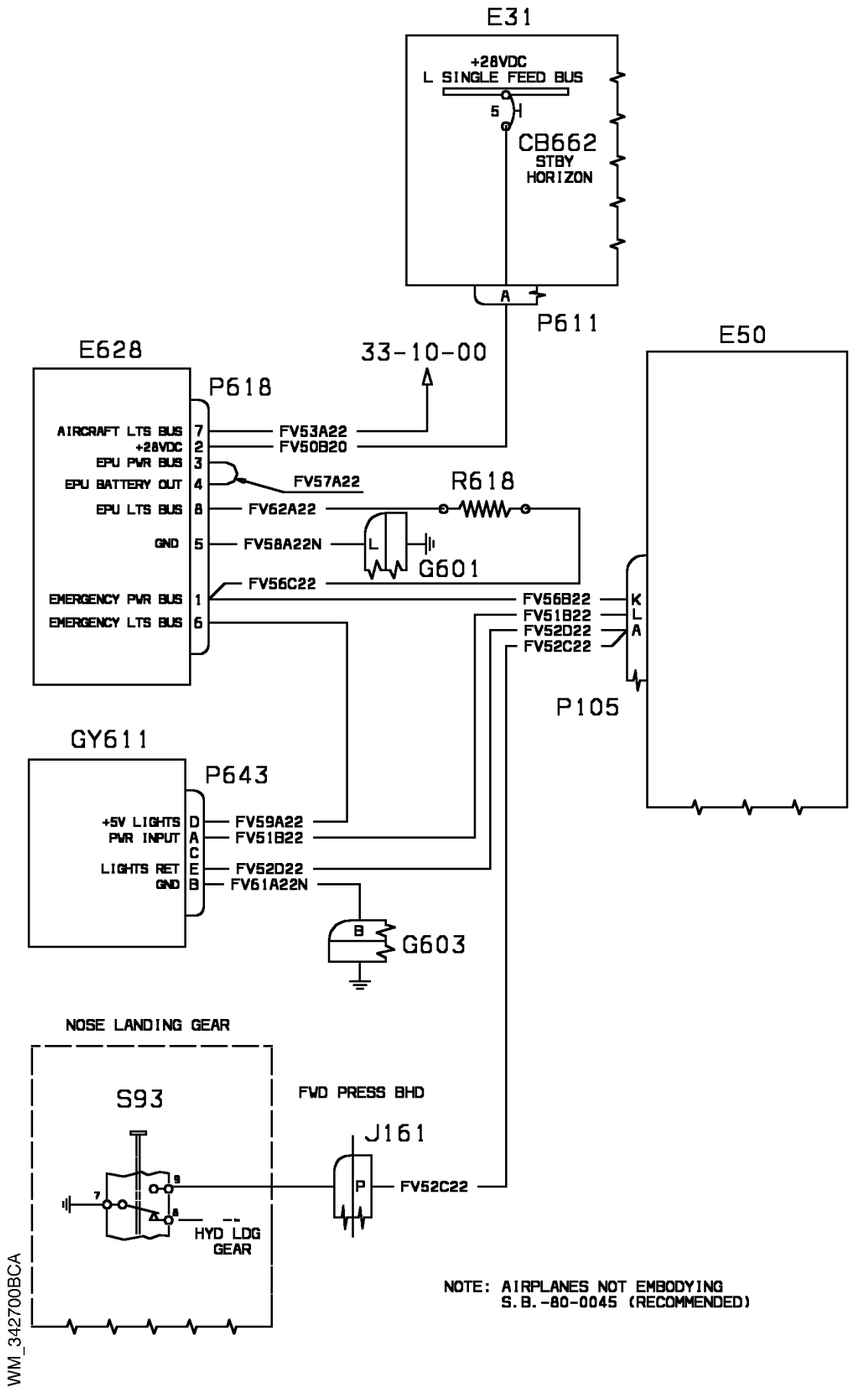


| EFFECTIVITY: | ATTITUDE & DIRECTION |
|---|---|
| 1004-1033 | Stby Horizon |

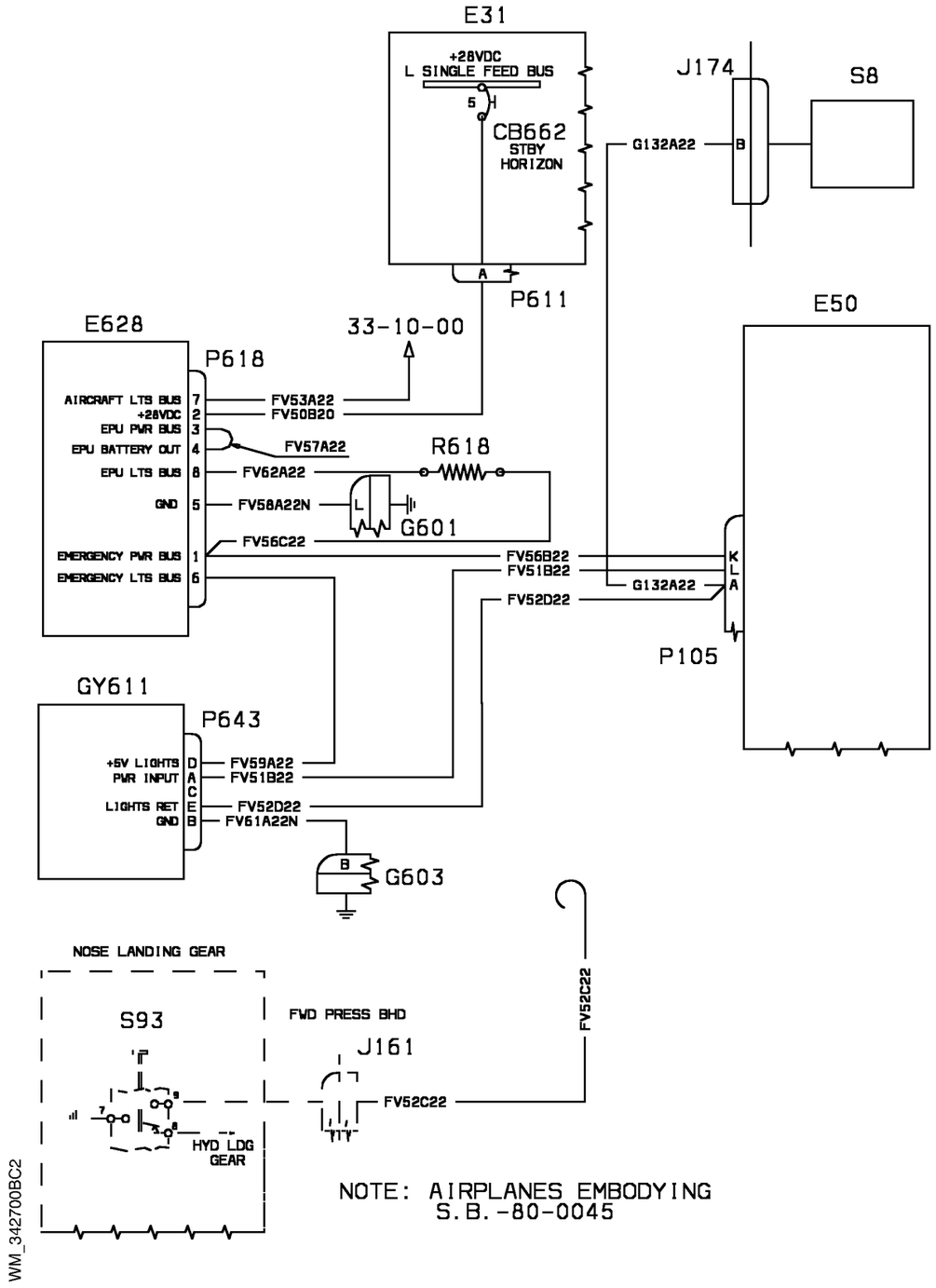
E31
+28VDC
L SINGLE FEED BUS
5
H
CB662
STBY
HORIZON
A
P611
J174
G132A22
B
S8
E628
P618
33-10-00
AIRCRAFT LTS BUS 7
+28VDC 2
EPU PWR BUS 3
EPU BATTERY OUT 4
EPU LTS BUS 8
GND 5
EMERGENCY PWR BUS 1
EMERGENCY LTS BUS 6
FV53A22
FV50B20
FV57A22
FV62A22
FV58A22N
FV56C22
R618
L
G601
E50
FV56B22
FV51B22
FV52D22
G132A22
K
L
A
P105
GY611
P643
+5V LIGHTS D
PWR INPUT A
C
LIGHTS RET E
GND B
FV59A22
FV51B22
FV52D22
FV61A22N
B
G603
NOSE LANDING GEAR
S93
FWD PRESS BHD
J161
FV52C22
FV52C22
HYD LDG
GEAR
NOTE: AIRPLANES EMBODYING
S.B.-80-0045
WM_342700BC2

Eff. 1004 1057 if Sb 80-0167(Opt.) and SB. 80-0190 embodied

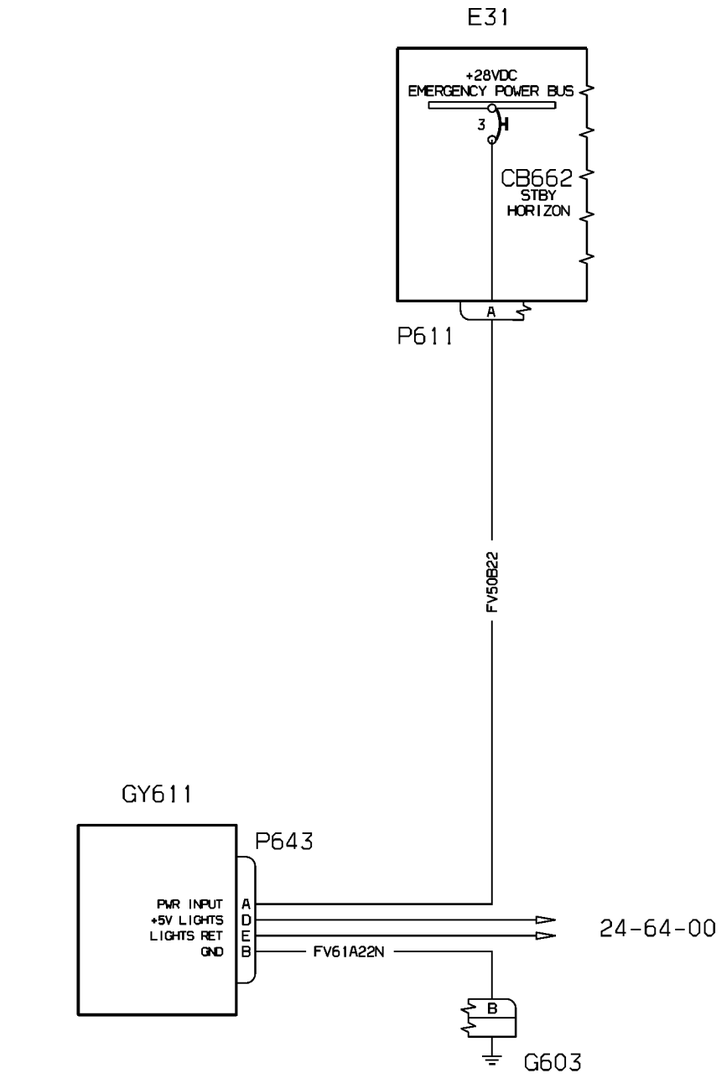


WM_342700CL

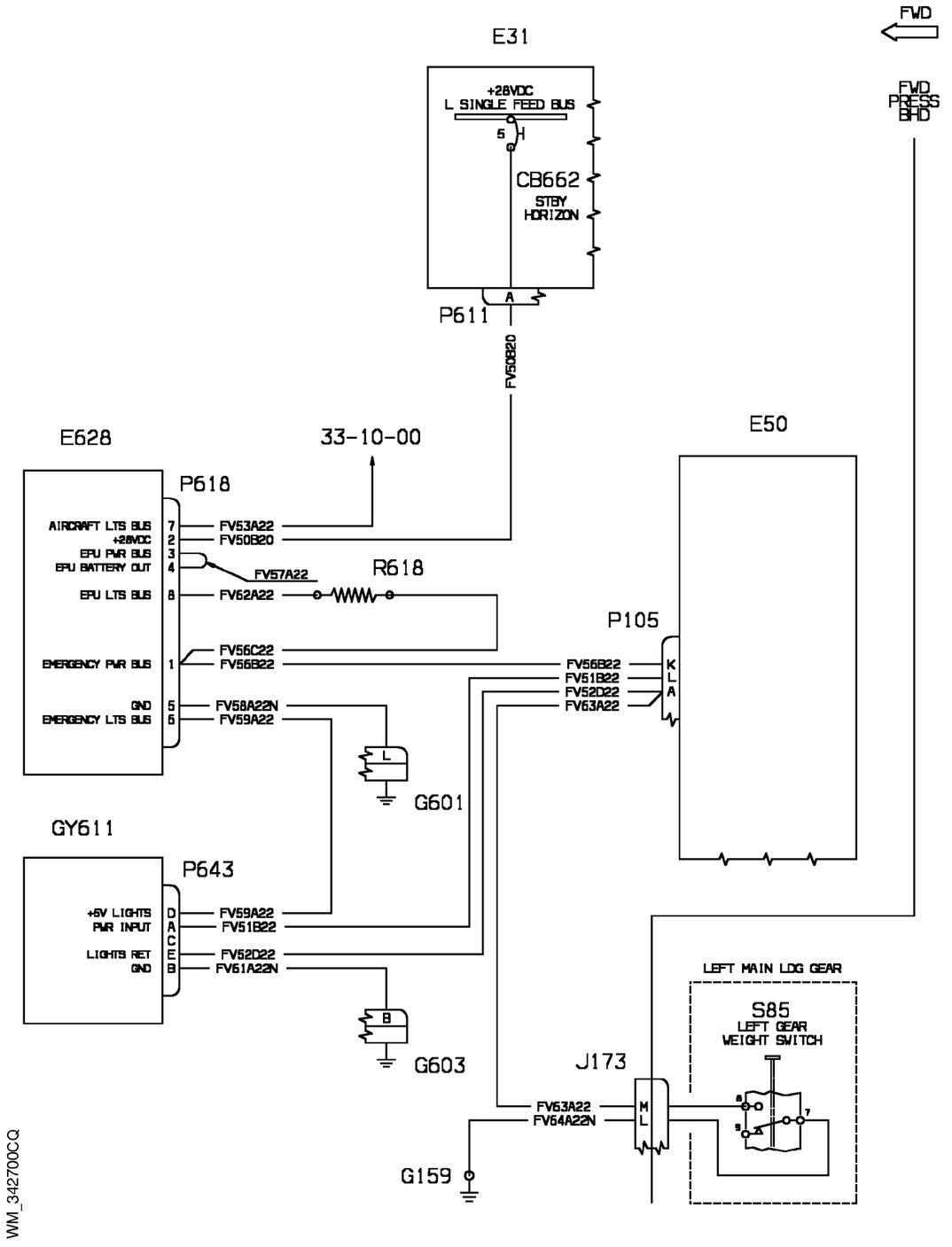
FWD
E31
+28VDC
L SINGLE FEED BUS
5
H
CB662
STBY
HORIZON
A
P611
FV50B20
FWD
PRESS
BHD
E628
33-10-00
E50
P618
AIRCRAFT LTS BUS 7 FV53A22
+28VDC 2 FV50B20
EPU PWR BUS 3
EPU BATTERY OUT 4
FV57A22
R618
EPU LTS BUS 8 FV62A22
FV56C22
EMERGENCY PWR BUS 1 FV56B22
GND 5 FV58A22N
EMERGENCY LTS BUS 6 FV59A22
L
G601
P105
FV56B22 K
FV51B22 L
FV52D22 A
FV63A22
GY611
P643
+5V LIGHTS PWR INPUT D FV59A22
A FV51B22
C
LIGHTS RET E FV52D22
GND B FV61A22N
B
G603
LEFT MAIN LDG GEAR
S85
LEFT GEAR
WEIGHT SWITCH
J173
FV63A22 M
FV64A22N L
G159
WM_342700CQ

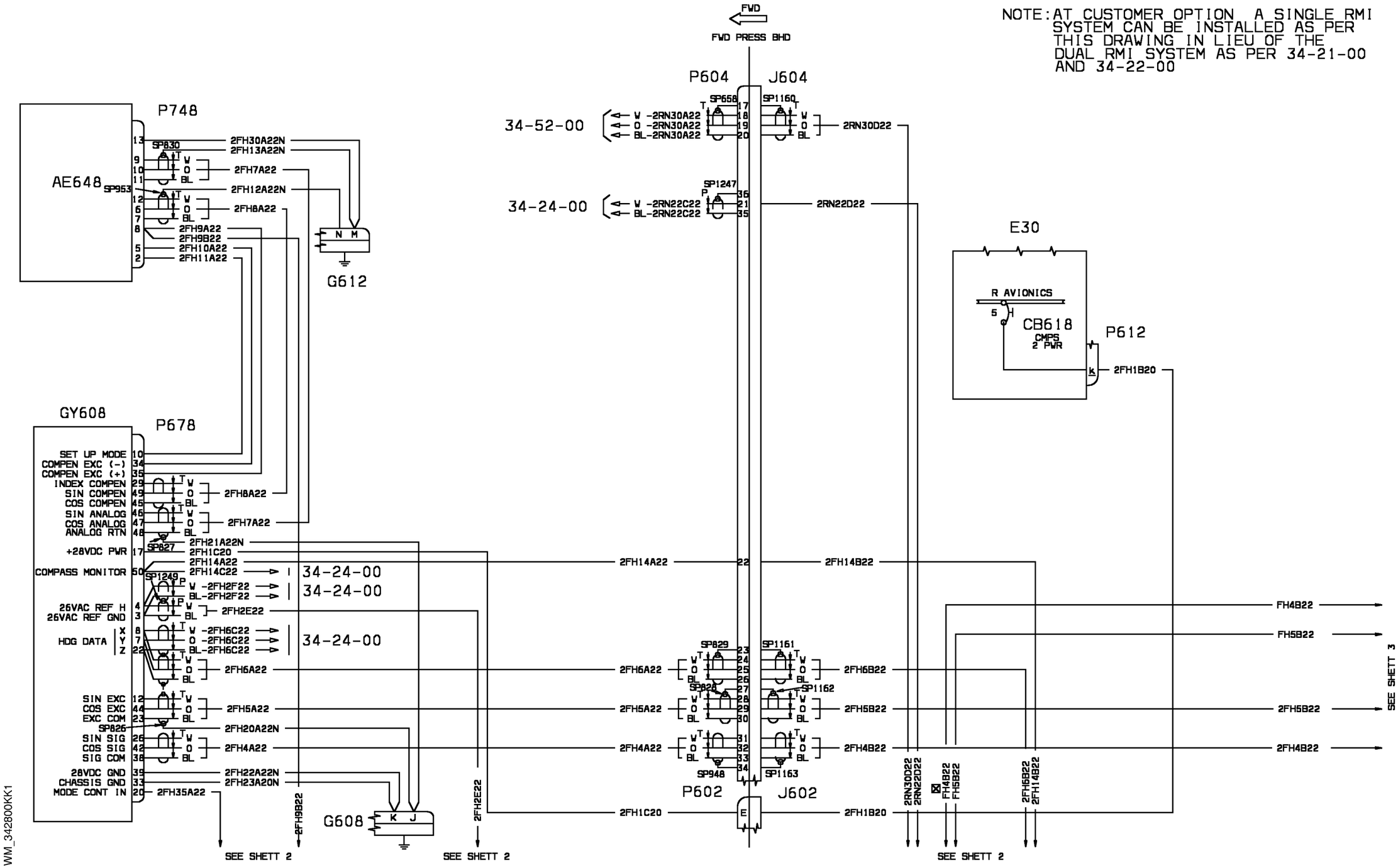


| EFFECTIVITY: | ATTITUDE & DIRECTION<br>RMI-Single Installation (Optional) |
|---|---|

**34-28-00**

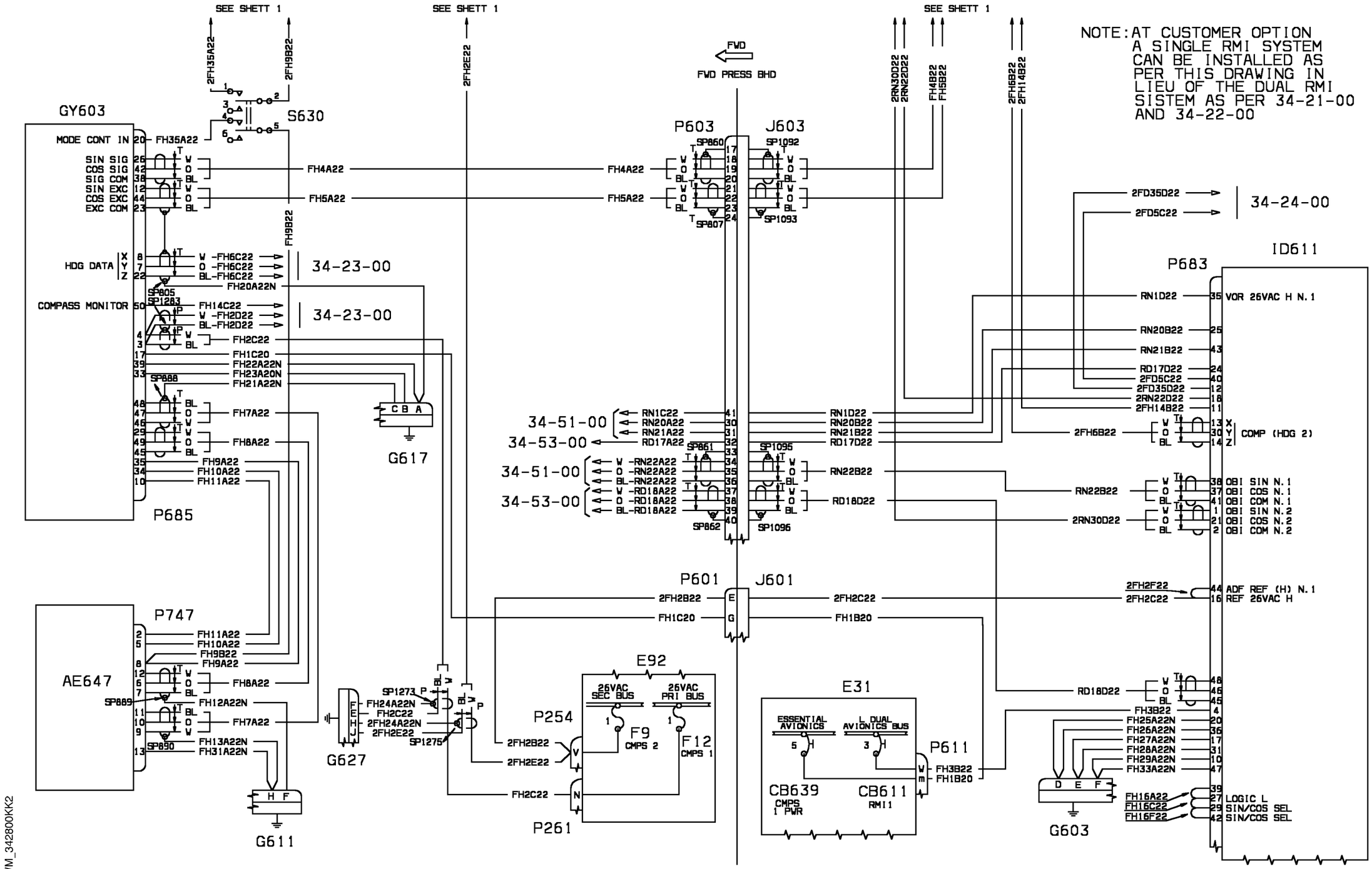


WM_342800KK2

| EFFECTIVITY: | ATTITUDE & DIRECTION<br>RMI-Single Installation (Optional) |
|---|---|

**34-28-00**

NOTE: AT CUSTOMER OPTION A SINGLE RMI SYSTEM CAN BE INSTALLED AS PER THIS DRAWING IN LIEU OF THE DUAL RMI SYSTEM AS PER 34-21-00 AND 34-22-00

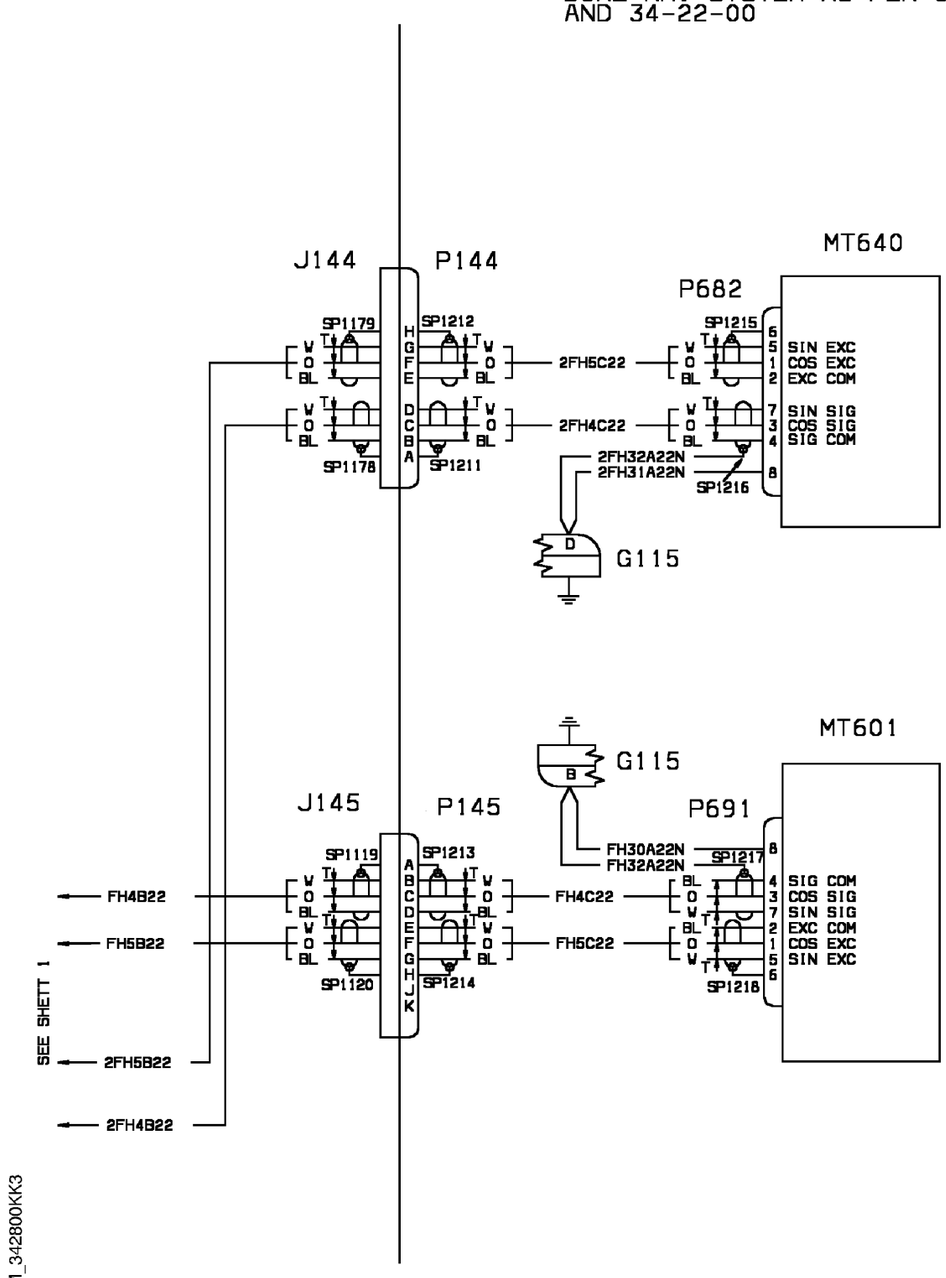


| EFFECTIVITY: | ATTITUDE & DIRECTION<br>RMI-Single Installation (Optional) |
|---|---|

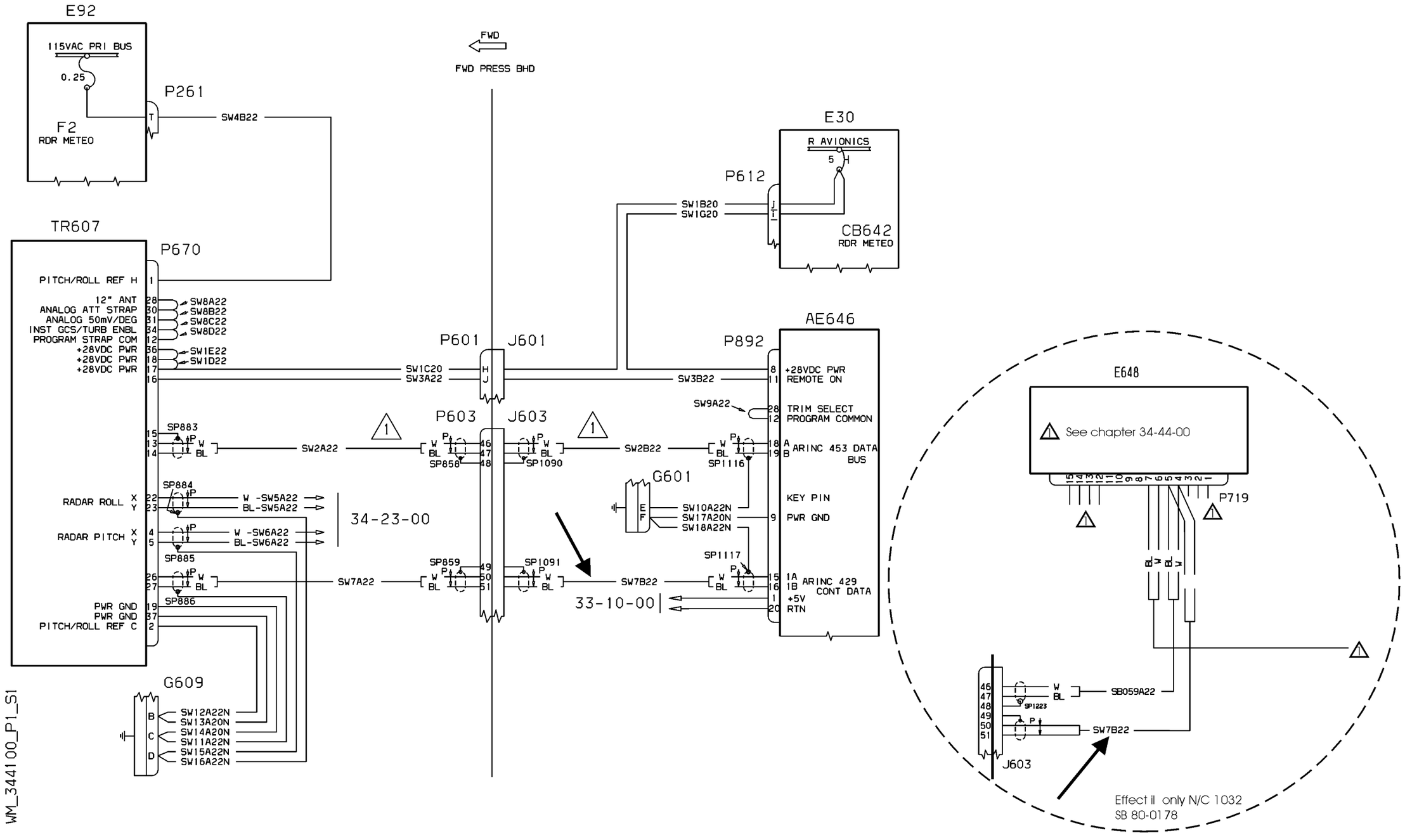


| EFFECTIVITY: | INDEPENDENT POSITION DETERMINING<br>Weather Radar |
|---|---|

NOTE: AE649 RADIO ALTM TRANSCEIVER:
P/N 622-2855-001 PRE S.B.80-0062
P/N 622-2855-011 POST S.B.80-0062

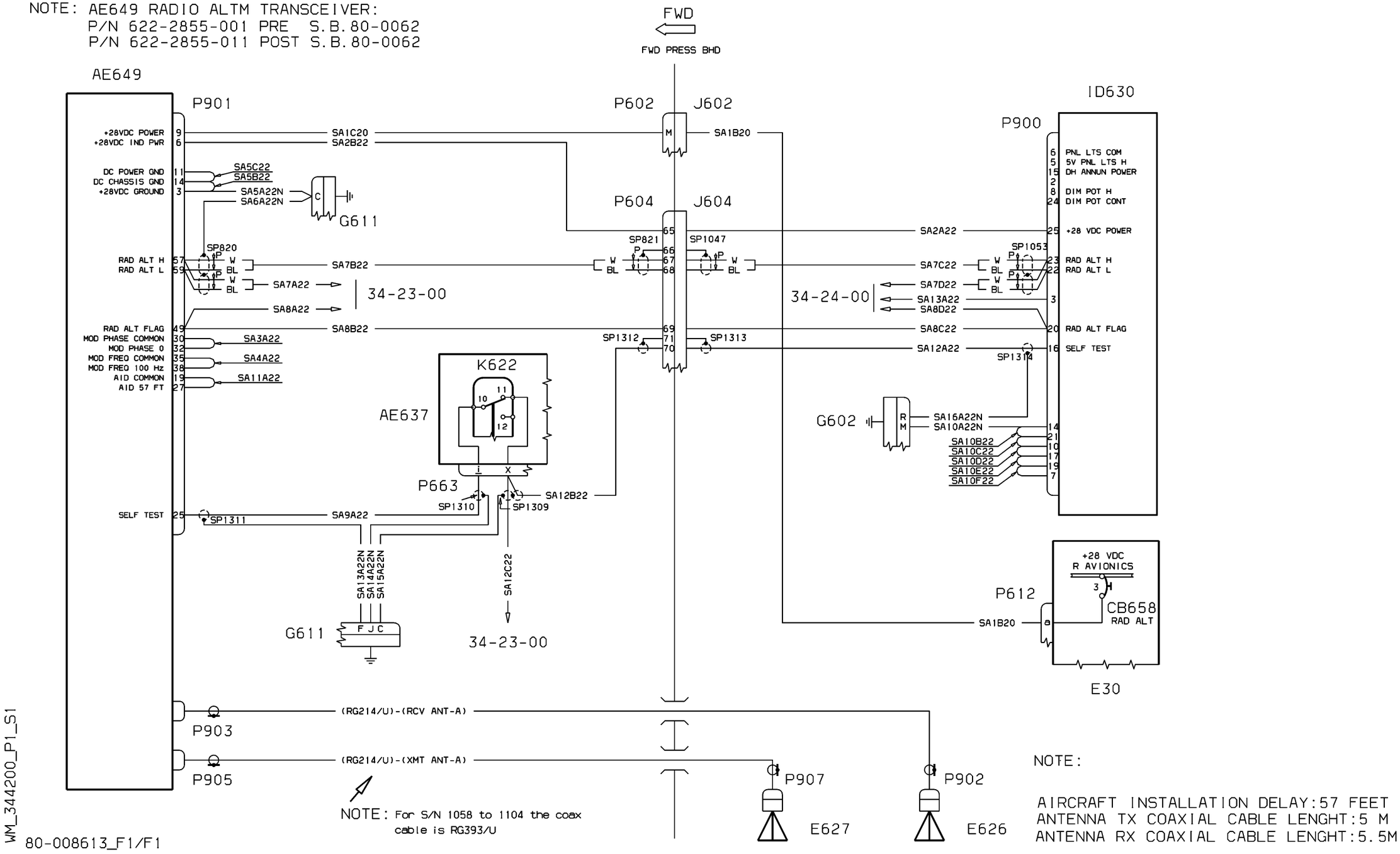

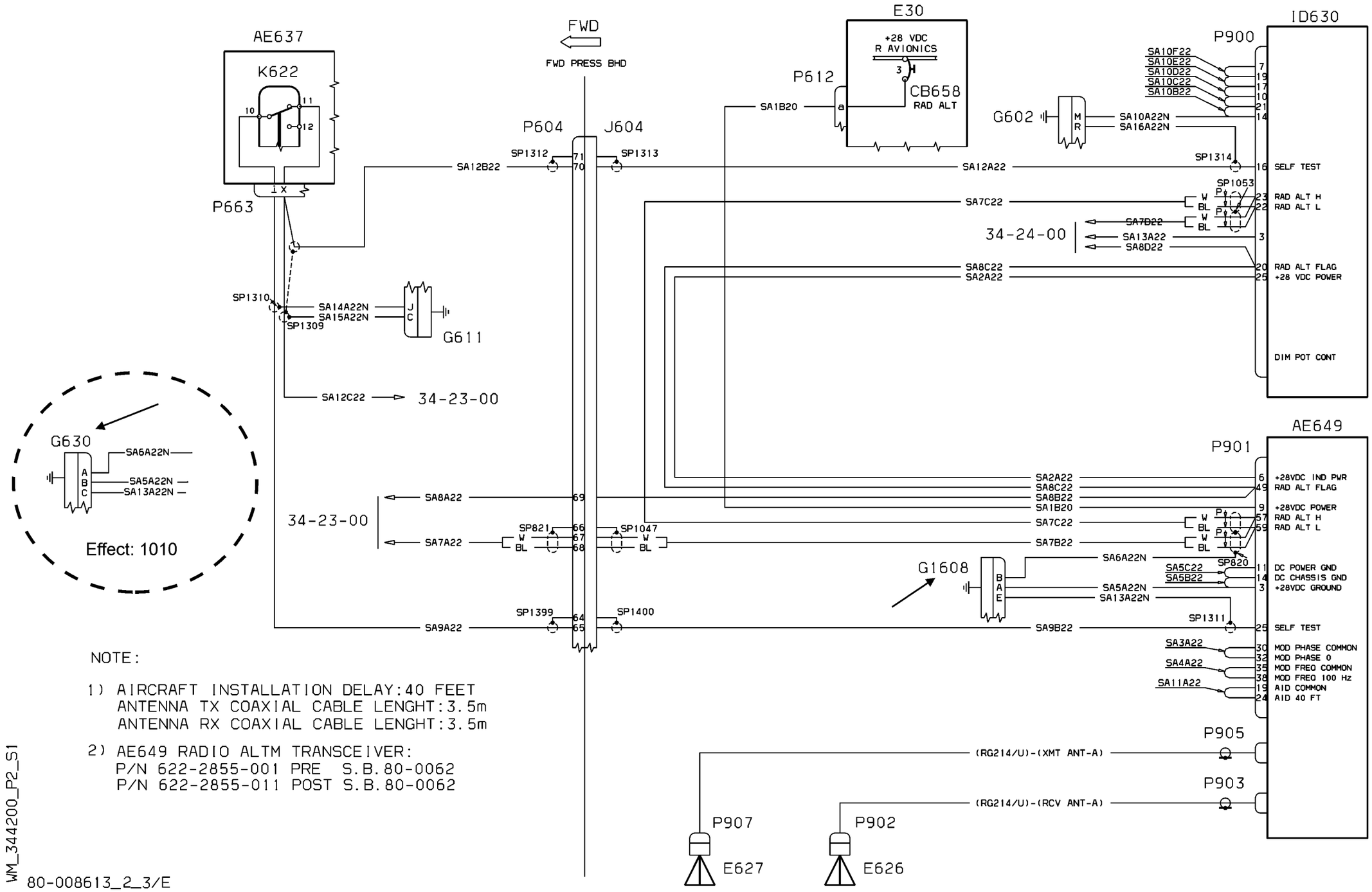


NOTE:

1) AIRCRAFT INSTALLATION DELAY:40 FEET
   ANTENNA TX COAXIAL CABLE LENGHT:3.5m
   ANTENNA RX COAXIAL CABLE LENGHT:3.5m

2) AE649 RADIO ALTM TRANSCEIVER:
   P/N 622-2855-001 PRE S.B.80-0062
   P/N 622-2855-011 POST S.B.80-0062

WM_344200_P2_S1

80-008613_2_3/E

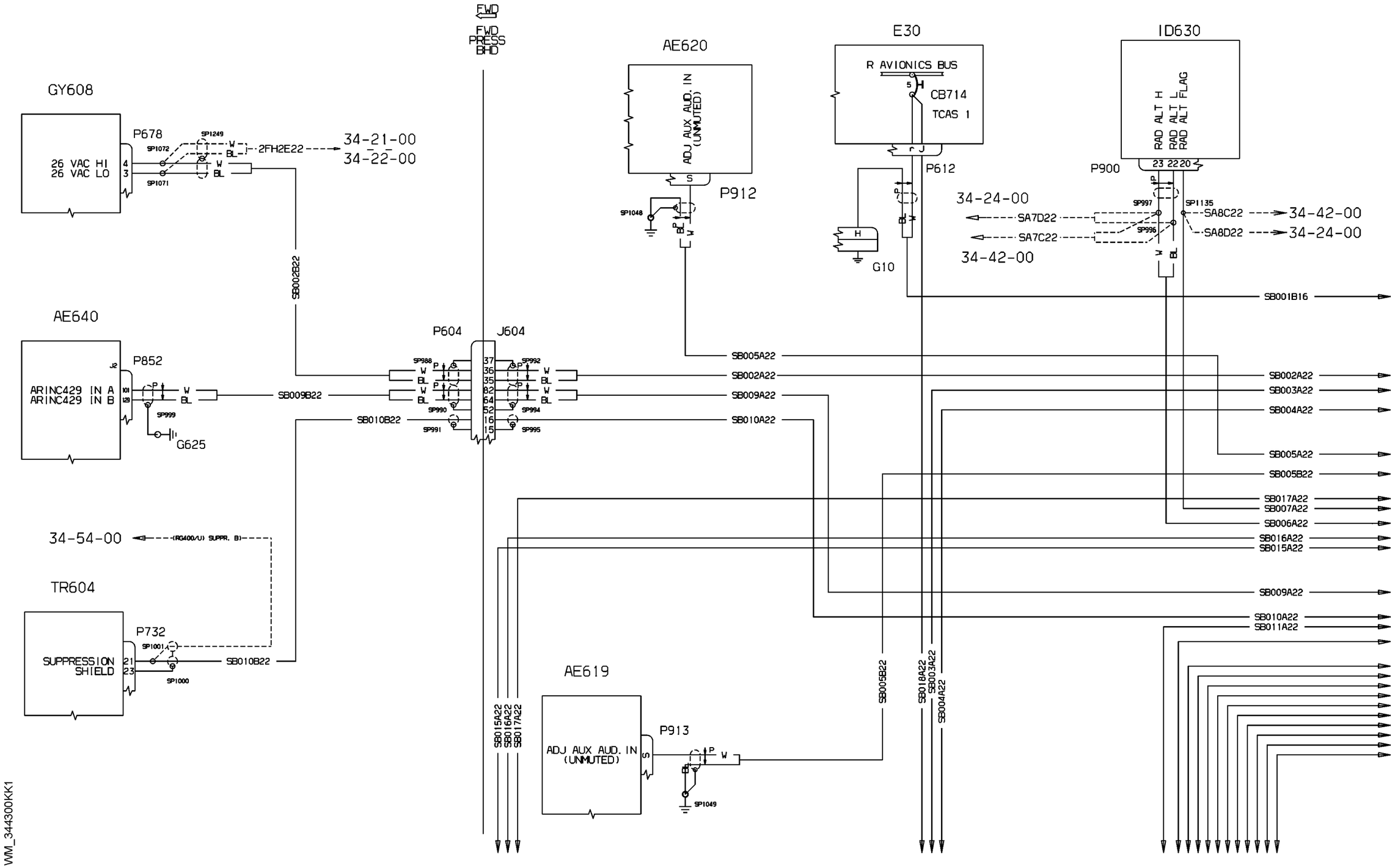


WM_344300KK1

| EFFECTIVITY: | INDEPENDENT POSITION DETERMINING<br>TCAS 1 ( Optional ) |
|---|---|

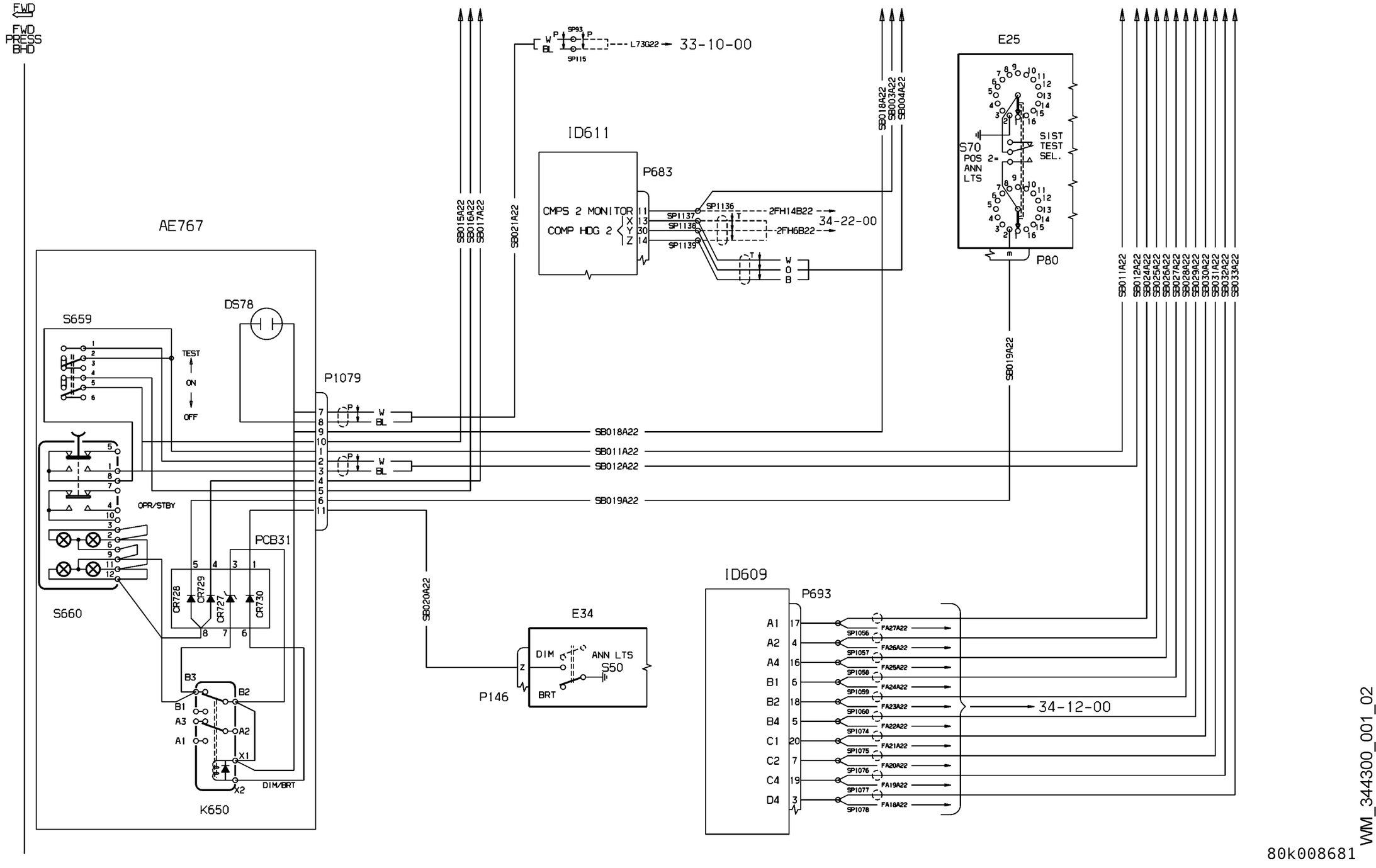


| EFFECTIVITY: | INDEPENDENT POSITION DETERMINING<br>TCAS 1 ( Optional ) |
|---|---|

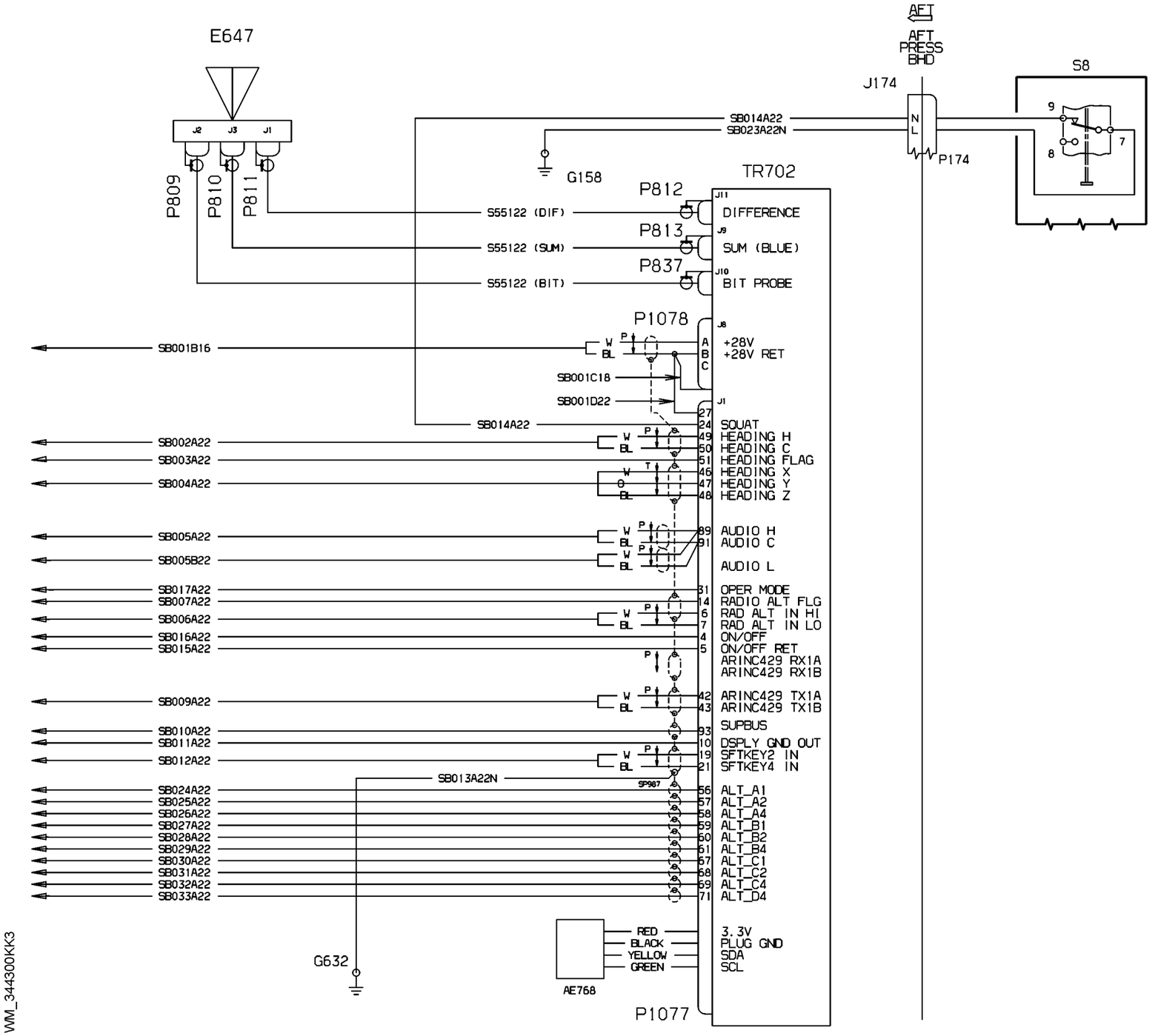


WM_344300KK3

| EFFECTIVITY: | INDEPENDENT POSITION DETERMINING<br>TCAS 1 ( Optional ) |
|---|---|

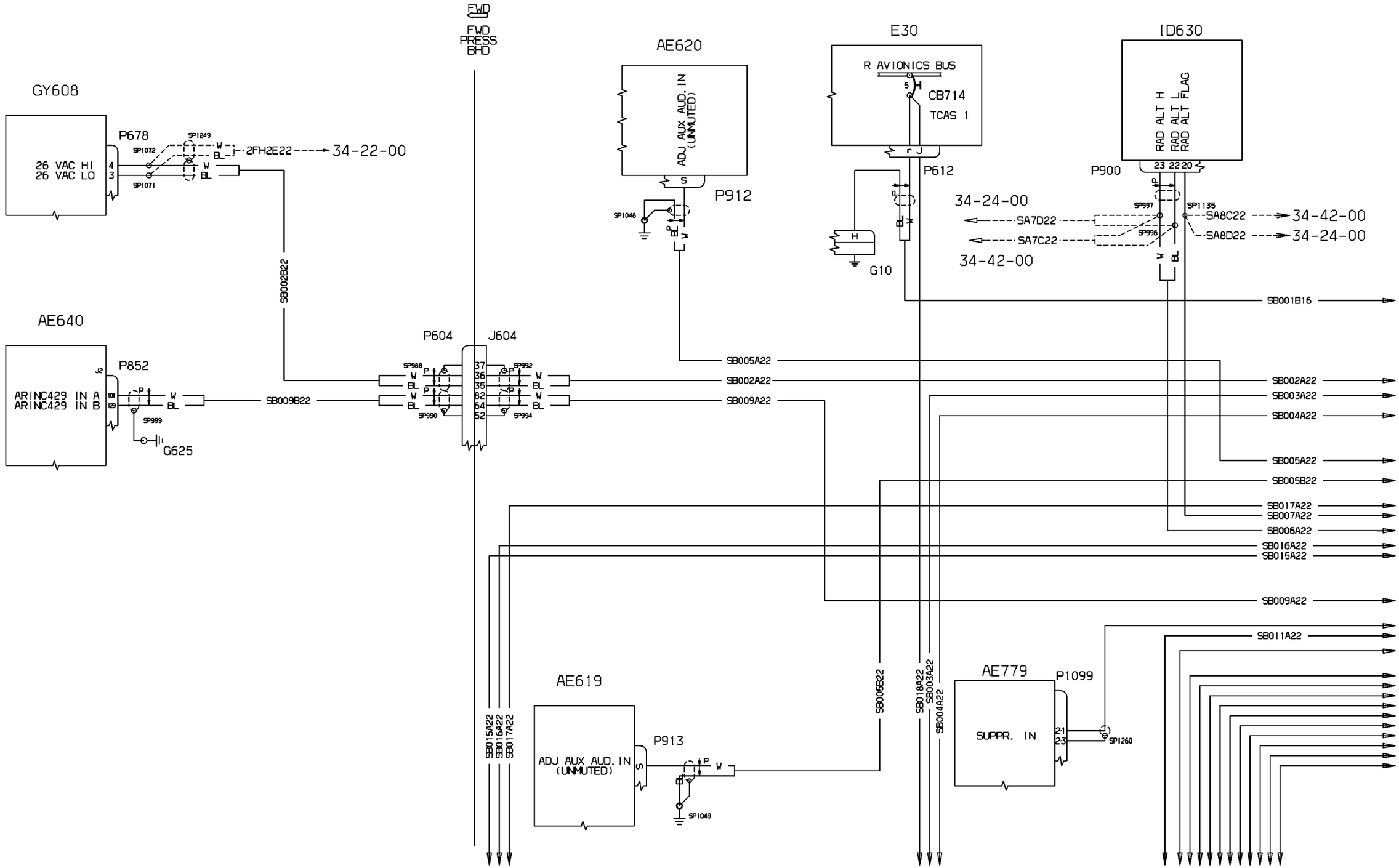


WM_344300JJA1

| EFFECTIVITY: | INDEPENDENT POSITION DETERMINING |
|---|---|
| 1076,1085,1090 | TCAS 1 / MODE-S XPNDR ( M.M.) |

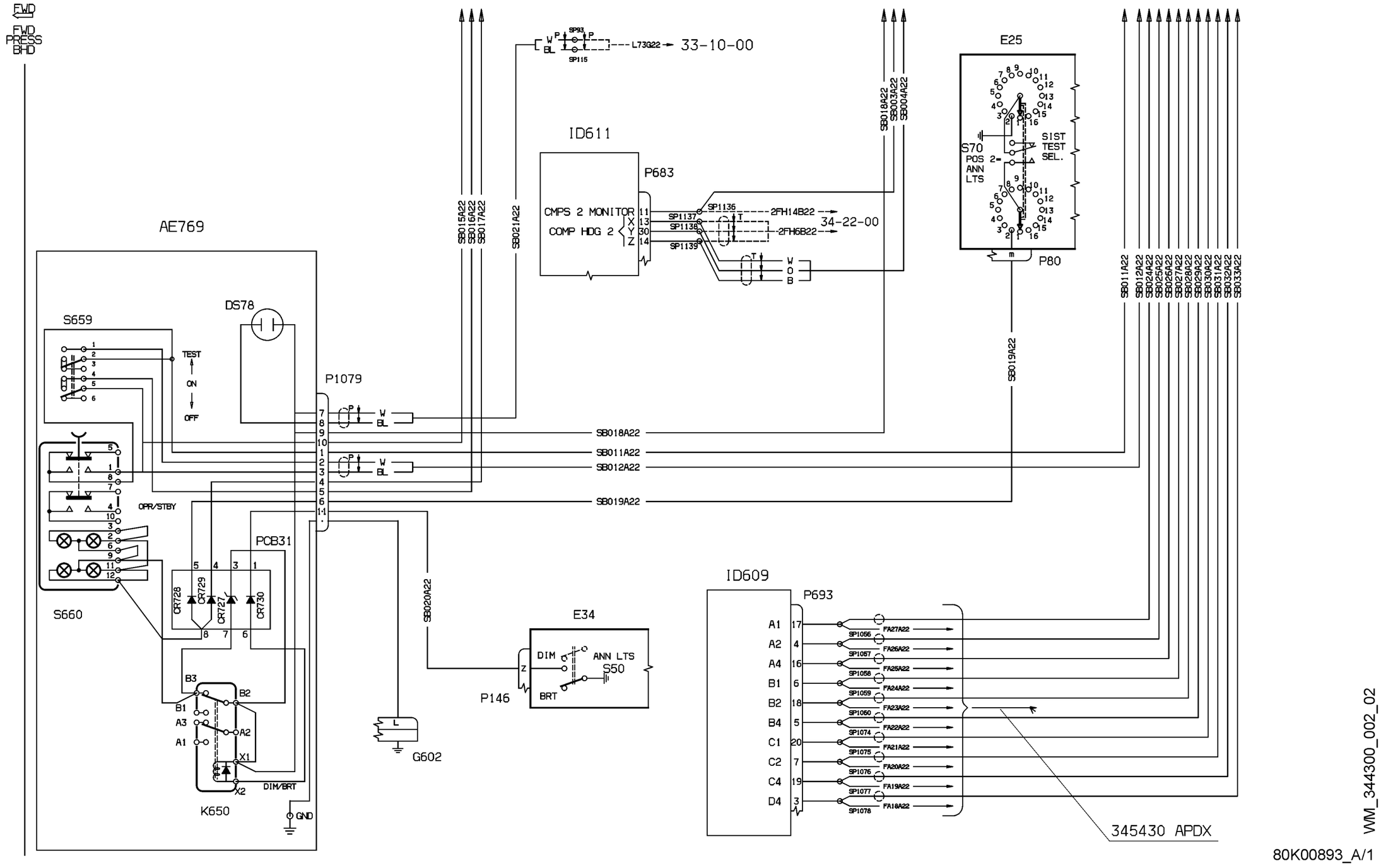
FWD
FWD
PRESS
BHD
AE769
S659
TEST
ON
OFF
DS78
P1079
OPR/STBY
PCB31
CR728
CR729
CR727
CR730
S660
B3
B2
B1
A3
A2
A1
X1
X2
DIM/BRT
K650
GND
SB015A22
SB016A22
SB017A22
SB021A22
SB020A22
SB018A22
SB003A22
SB004A22
SB019A22
SB011A22
SB012A22
SB024A22
SB025A22
SB026A22
SB027A22
SB028A22
SB029A22
SB030A22
SB031A22
SB032A22
SB033A22
SP93
SP115
L73G22
33-10-00
ID611
P683
CMPS 2 MONITOR
COMP HDG 2
SP1136
SP1137
SP1138
SP1139
2FH14B22
2FH6B22
34-22-00
E25
S70
POS
ANN
LTS
SIST
TEST
SEL.
P80
E34
DIM
ANN LTS
S50
BRT
P146
G602
ID609
P693
SP1056
SP1057
SP1058
SP1059
SP1060
SP1074
SP1075
SP1076
SP1077
SP1078
FA27A22
FA26A22
FA25A22
FA24A22
FA23A22
FA22A22
FA21A22
FA20A22
FA19A22
FA18A22
345430 APDX
WM_344300_002_02
80K00893_A/1

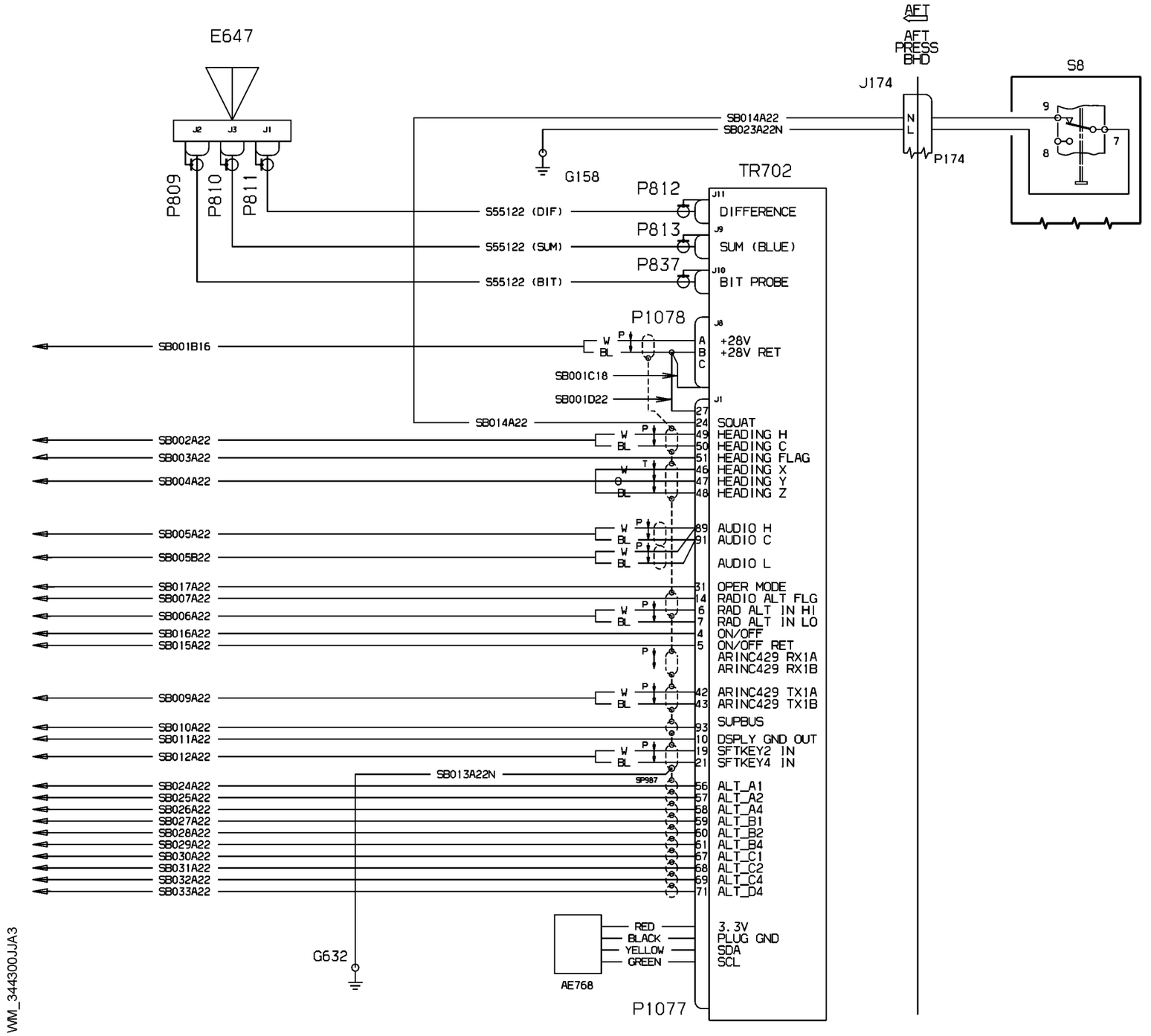
E647
J2
J3
J1
P809
P810
P811
G158
AFT
AFT PRESS BHD
J174
P174
S8
SB014A22
SB023A22N
TR702
P812
P813
P837
S55122 (DIF)
S55122 (SUM)
S55122 (BIT)
DIFFERENCE
SUM (BLUE)
BIT PROBE
P1078
SB001B16
SB001C18
SB001D22
SB014A22
SB002A22
SB003A22
SB004A22
SB005A22
SB005B22
SB017A22
SB007A22
SB006A22
SB016A22
SB015A22
SB009A22
SB010A22
SB011A22
SB012A22
SB013A22N
SB024A22
SB025A22
SB026A22
SB027A22
SB028A22
SB029A22
SB030A22
SB031A22
SB032A22
SB033A22
+28V
+28V RET
SQUAT
HEADING H
HEADING C
HEADING FLAG
HEADING X
HEADING Y
HEADING Z
AUDIO H
AUDIO C
AUDIO L
OPER MODE
RADIO ALT FLG
RAD ALT IN HI
RAD ALT IN LO
ON/OFF
ON/OFF RET
ARINC429 RX1A
ARINC429 RX1B
ARINC429 TX1A
ARINC429 TX1B
SUPBUS
DSPLY GND OUT
SFTKEY2 IN
SFTKEY4 IN
ALT_A1
ALT_A2
ALT_A4
ALT_B1
ALT_B2
ALT_B4
ALT_C1
ALT_C2
ALT_C4
ALT_D4
3.3V
PLUG GND
SDA
SCL
RED
BLACK
YELLOW
GREEN
AE768
G632
P1077
WM_344300JJA3

NOTE: ⚠1 If the TAWS Diagram has a TCAS1 connection the pin numbers of P604 and J604 connectors change as shown in Chapter 34-45-00

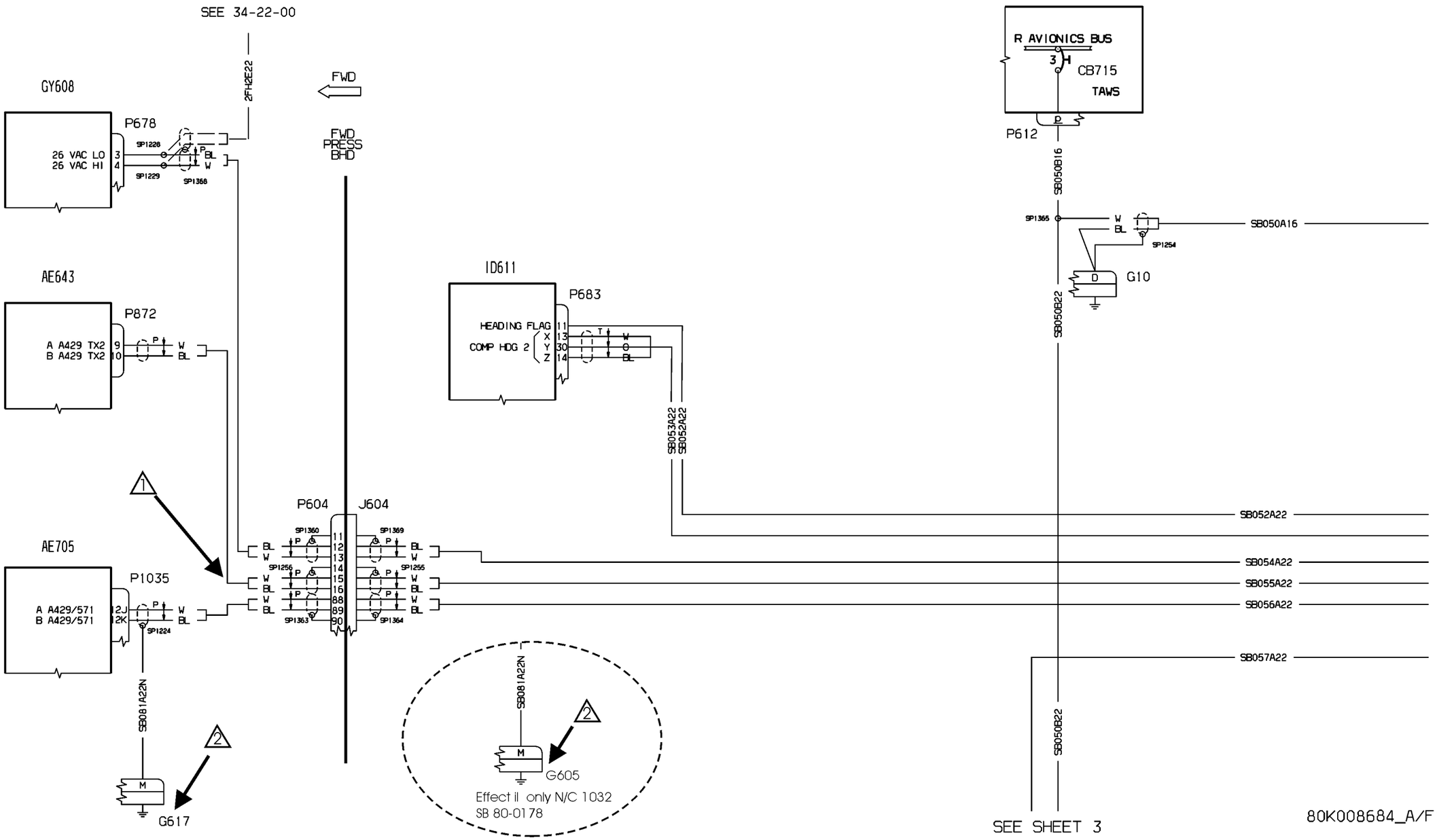


| EFFECTIVITY: | INDEPENDENT POSITION DETERMINING TAWS (optional ) |
|---|---|

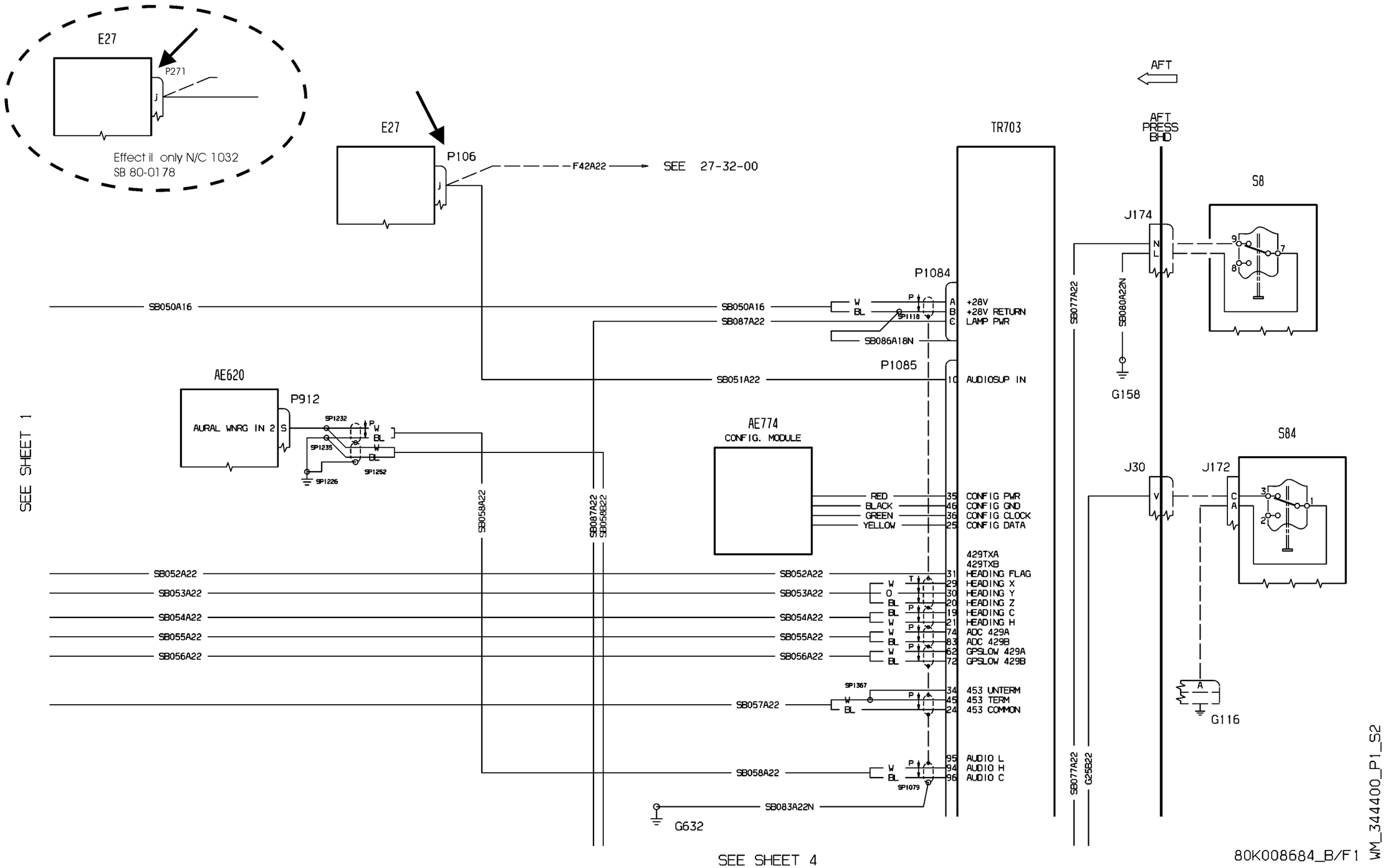


| EFFECTIVITY: | INDEPENDENT POSITION DETERMINING TAWS (optional ) |
|---|---|

⚠ For N/C 1032 see chapter 34-41-00

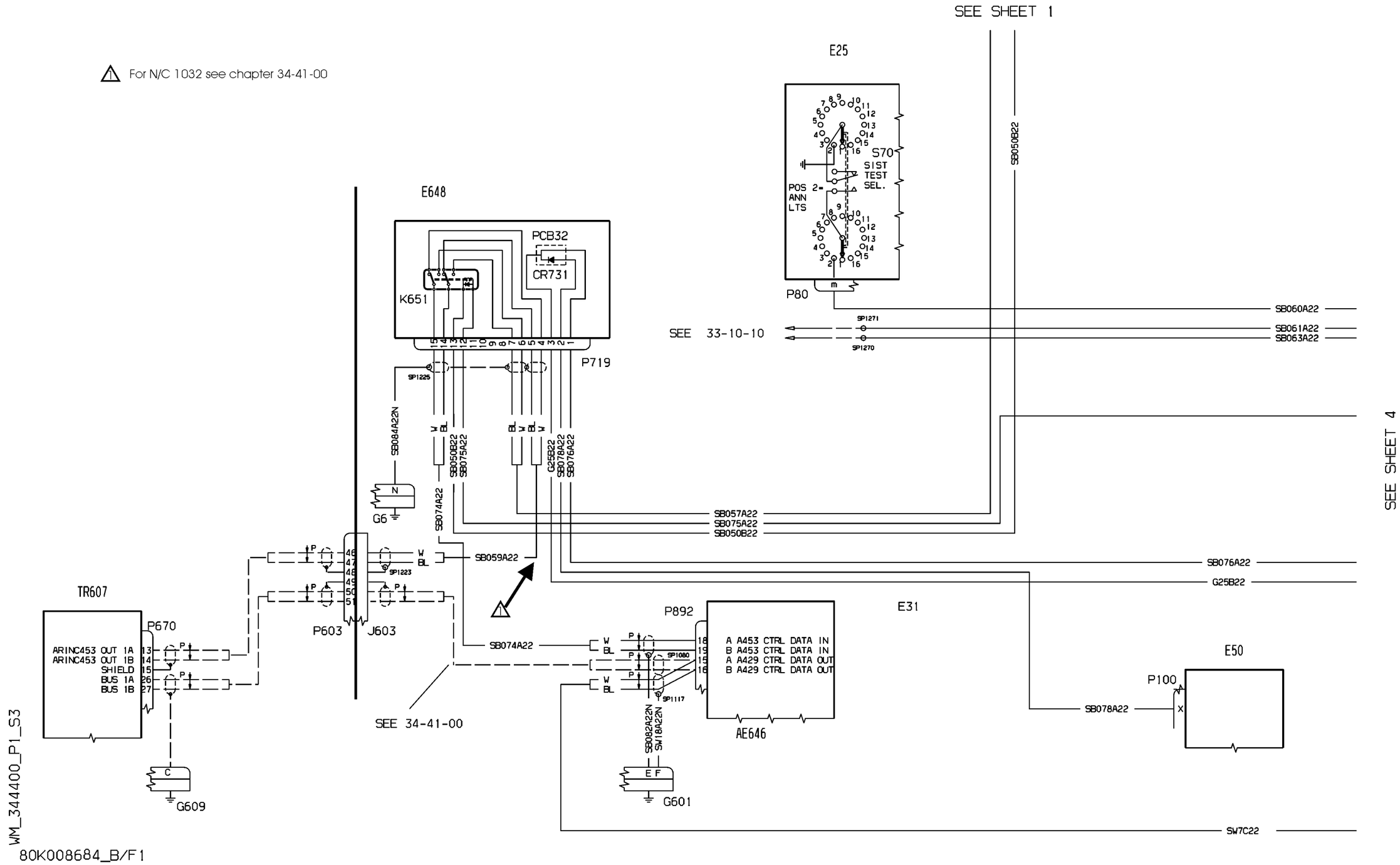


| EFFECTIVITY: | INDEPENDENT POSITION DETERMINING<br>TAWS (optional ) |
|---|---|

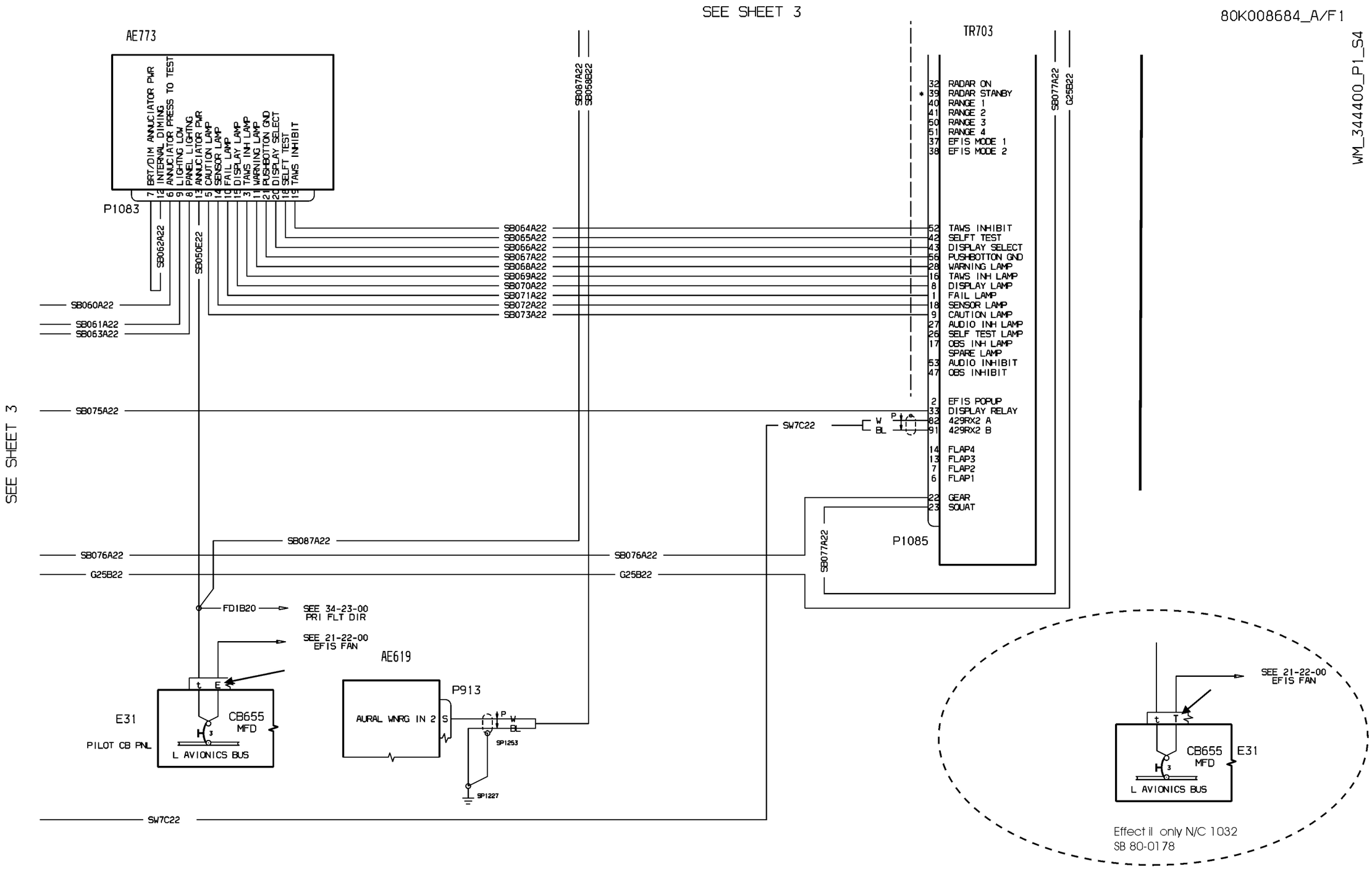


| EFFECTIVITY: | INDEPENDENT POSITION DETERMINING<br>TAWS (optional ) |
|---|---|

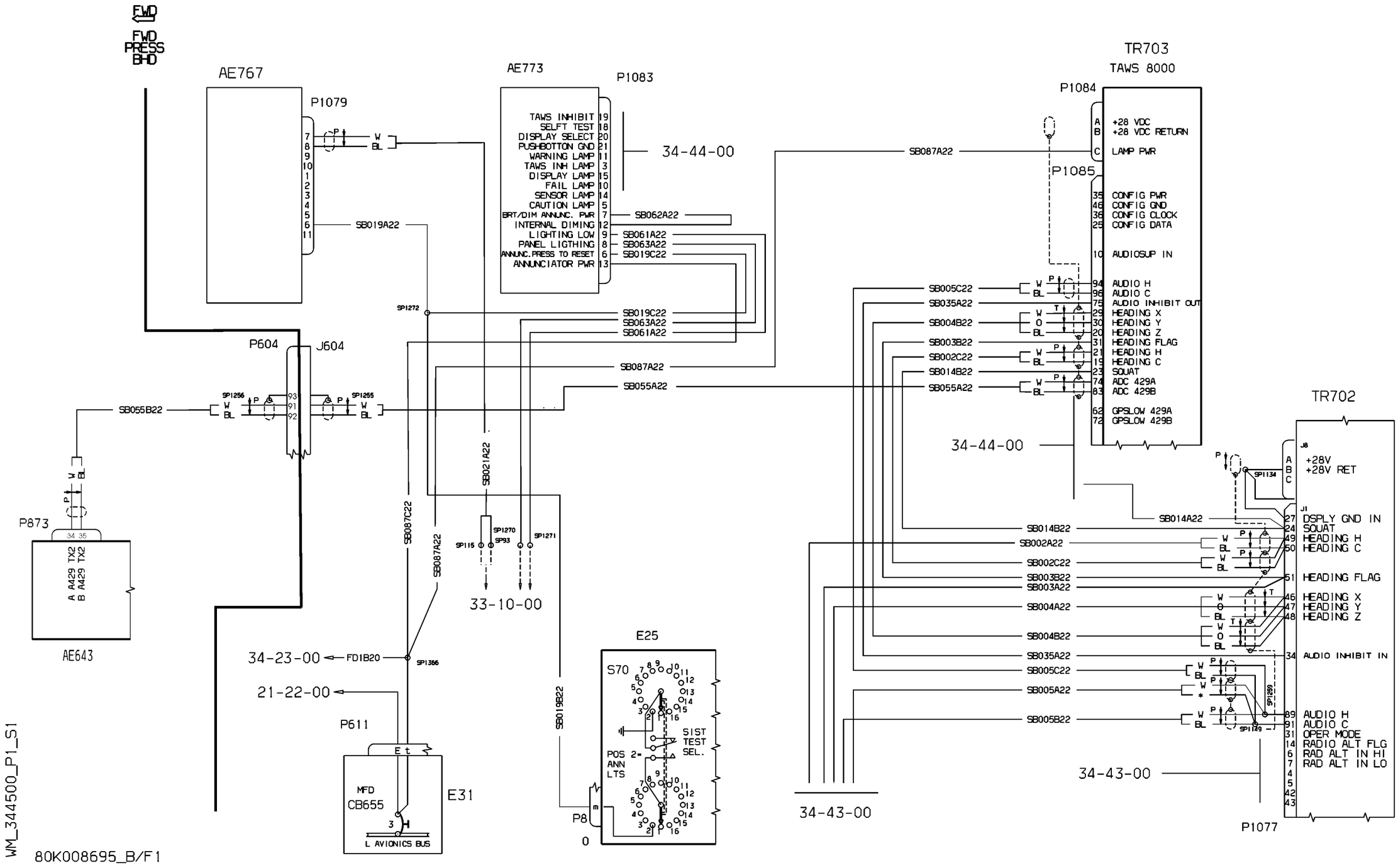


| EFFECTIVITY: | INDEPENDENT POSITION DETERMINING<br>TAWS with TCAS connections (optional ) |
|---|---|

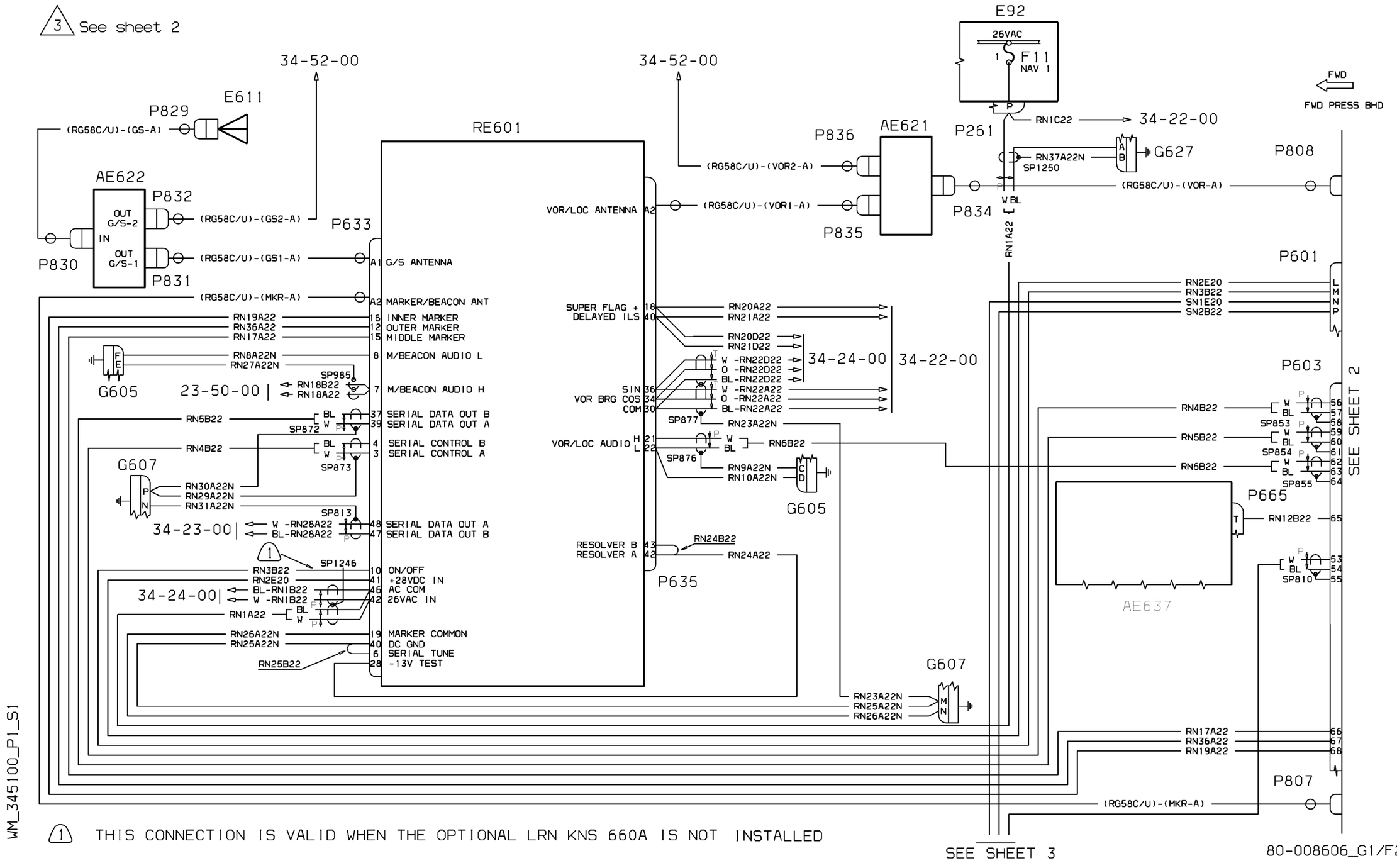


| EFFECTIVITY: | DEPENDENT POSITION DETERMINING<br>Primary Navigation DME |
|---|---|

**34-51-00**

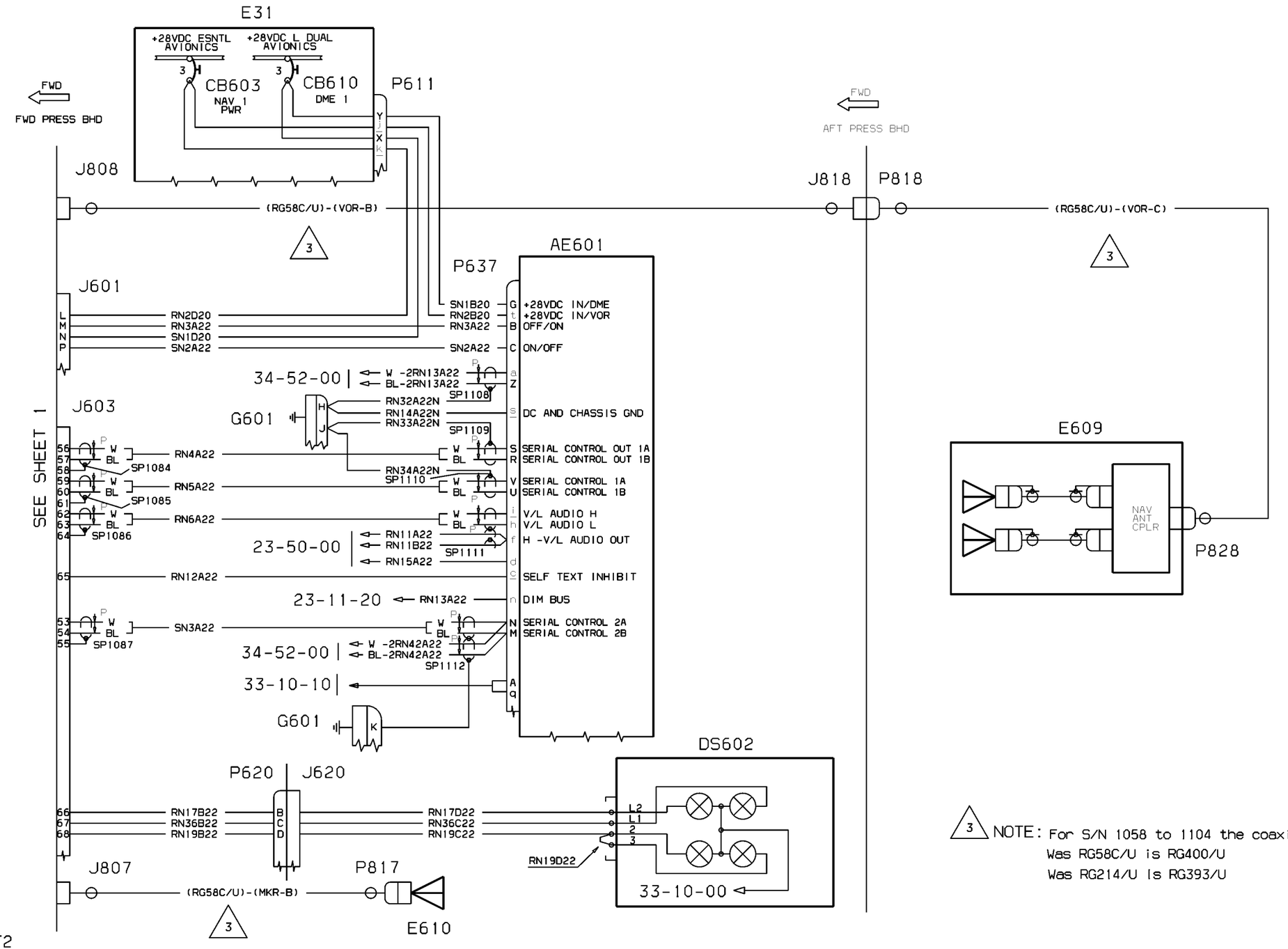


WM_345100_P1_S2

80-008606_G1/F2

| EFFECTIVITY: | DEPENDENT POSITION DETERMINING<br>Primary Navigation DME |
|---|---|

**34-51-00**

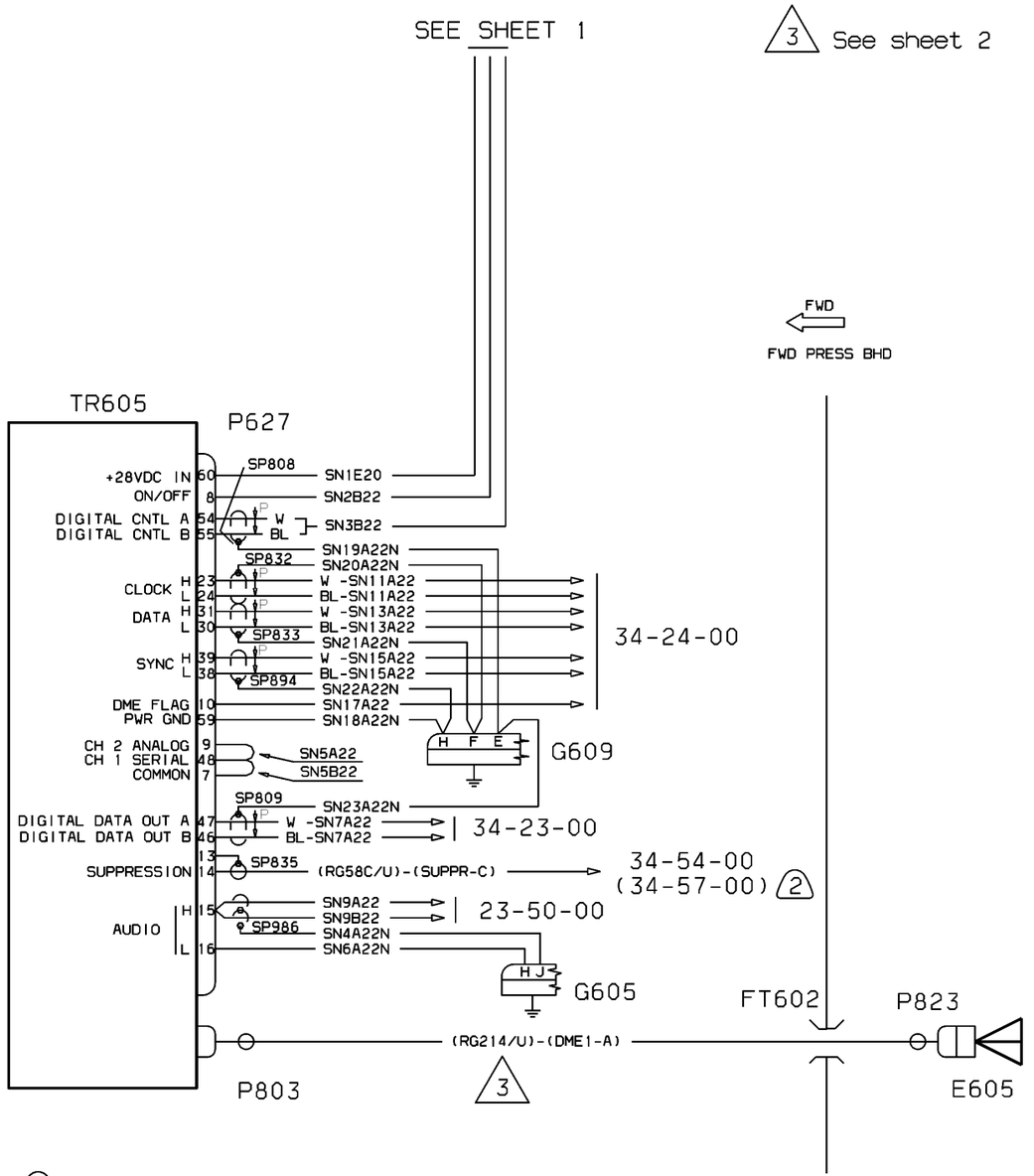


NOTE: P/N 622-6137-001 UNIT CAN BE UPGRADED TO NEW
P/N 622-6137-201 UNIT BY INCORPORATION OF
PIAGGIO S.B. 80-0099 (COLLINS S.B. NO.23)

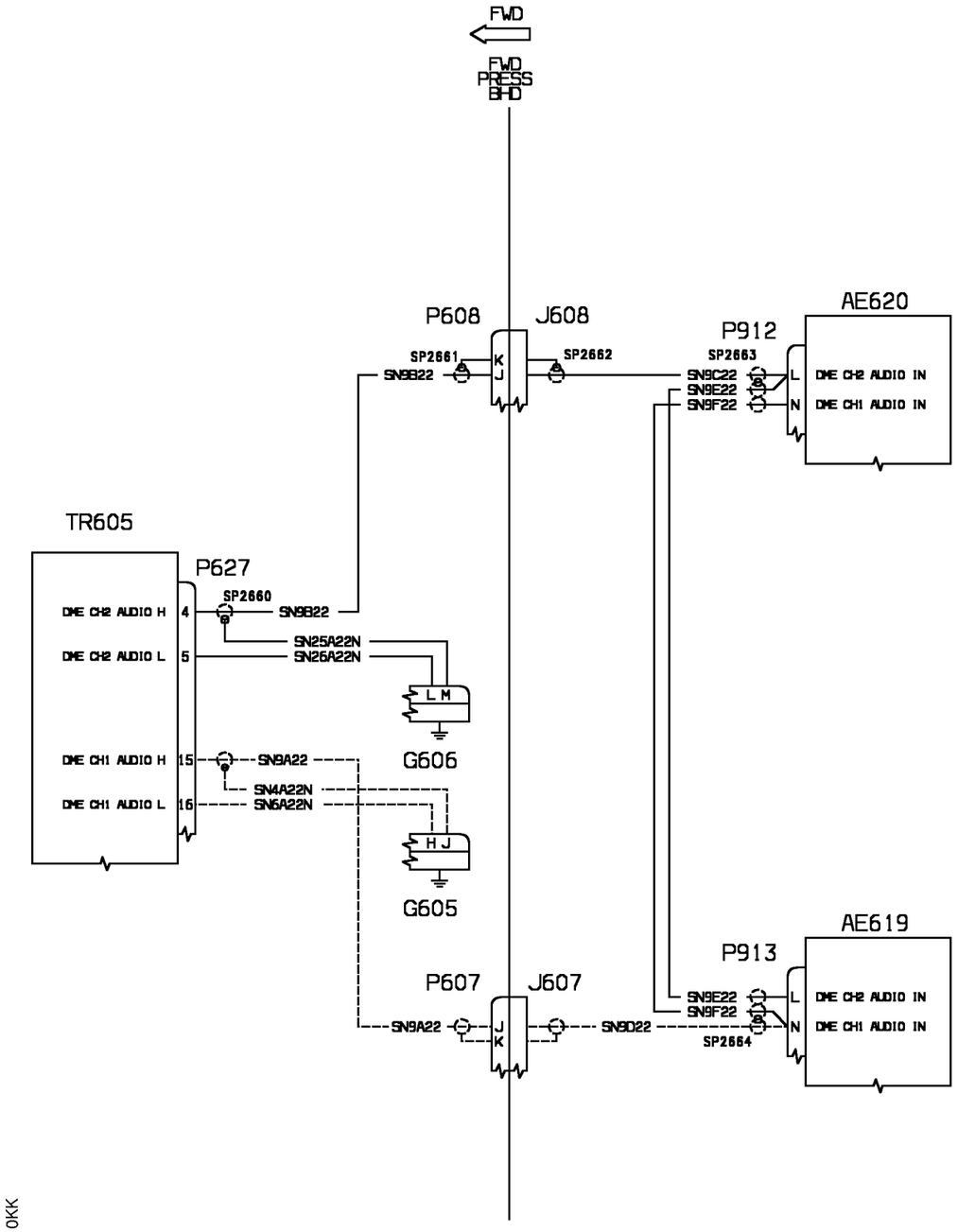


WM_345110KKK

| EFFECTIVITY: | DEPENDENT POSITION DETERMINING<br>Dual Audio DME (Optional) |
|---|---|

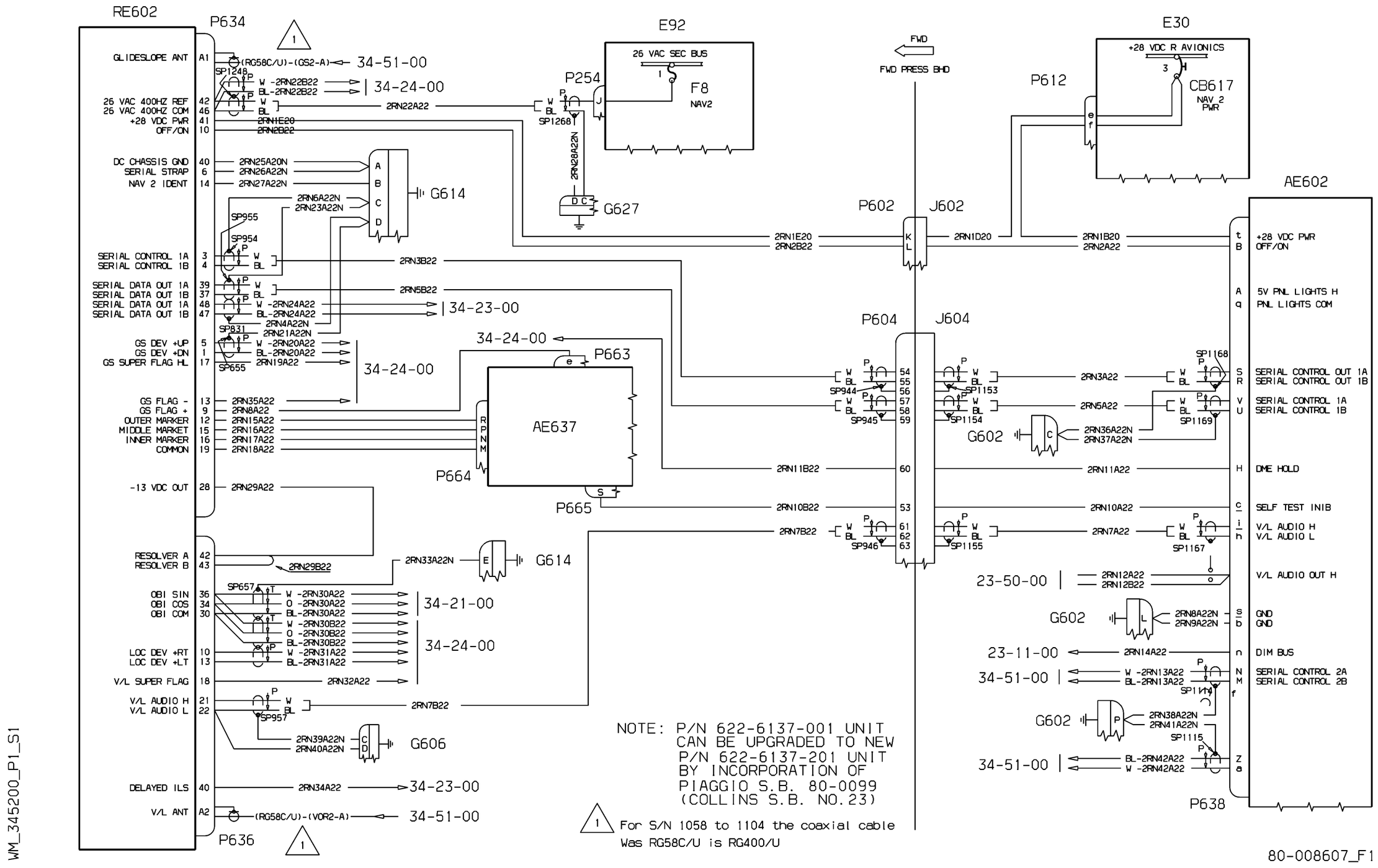


| EFFECTIVITY: | DEPENDENT POSITION DETERMINING<br>Secondary Navigation |
|---|---|

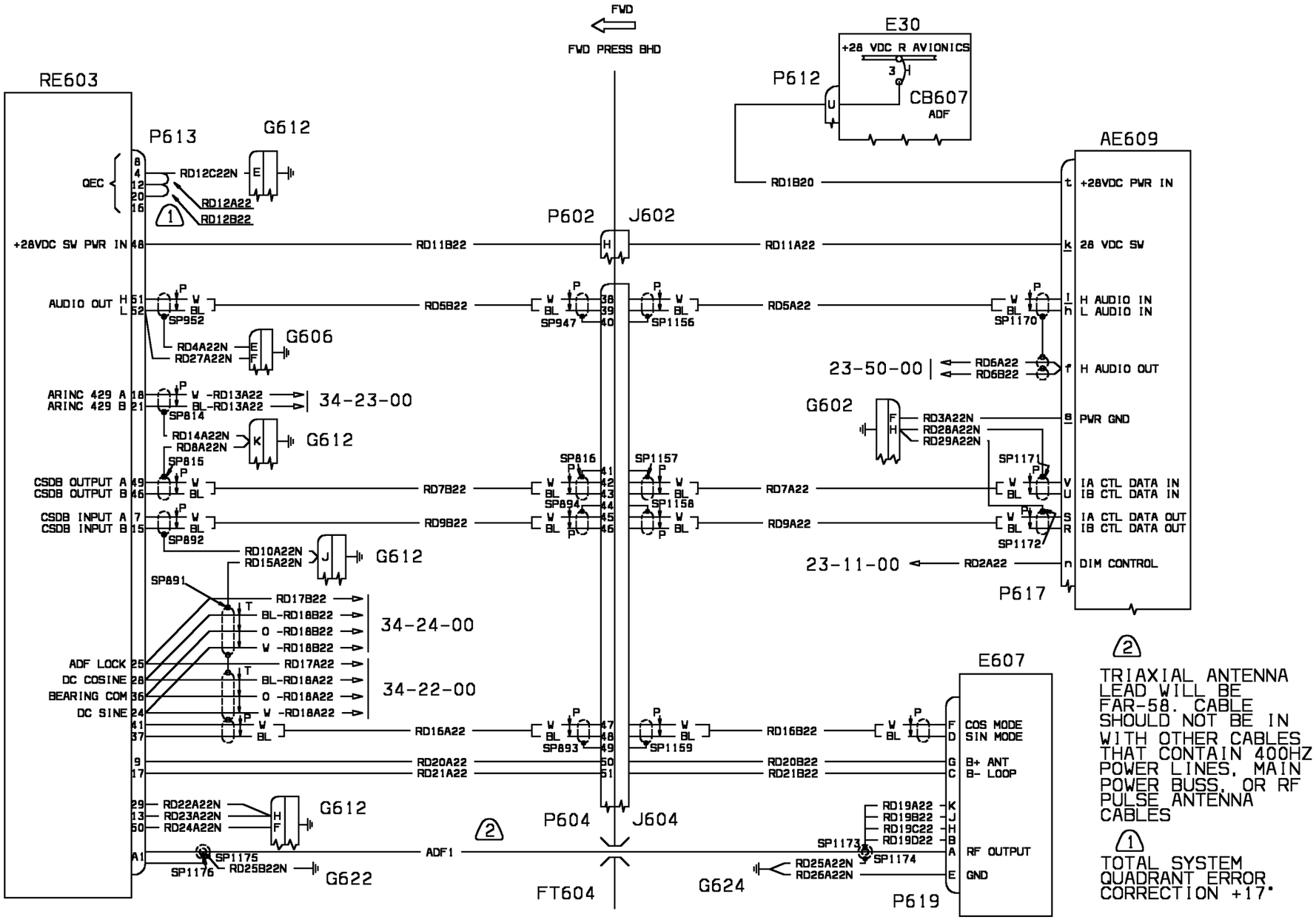
FWD
FWD PRESS BHD
RE603
P613
G612
QEC
RD12C22N
RD12A22
RD12B22
+28VDC SW PWR IN 48
RD11B22
P602
J602
RD11A22
AUDIO OUT H 51
L 52
SP952
RD5B22
SP947
SP1156
RD5A22
G606
RD4A22N
RD27A22N
ARINC 429 A 18
ARINC 429 B 21
-RD13A22
34-23-00
SP814
RD14A22N
RD8A22N
SP815
CSDB OUTPUT A 49
CSDB OUTPUT B 46
RD7B22
SP816
SP1157
SP894
SP1158
RD7A22
CSDB INPUT A 7
CSDB INPUT B 15
SP892
RD9B22
RD9A22
RD10A22N
RD15A22N
SP891
RD17B22
BL-RD18B22
O -RD18B22
W -RD18B22
34-24-00
ADF LOCK 25
DC COSINE 28
BEARING COM 36
DC SINE 24
RD17A22
BL-RD18A22
O -RD18A22
W -RD18A22
34-22-00
41
37
RD16A22
SP893
SP1159
RD16B22
9
17
RD20A22
RD21A22
RD20B22
RD21B22
29
13
50
RD22A22N
RD23A22N
RD24A22N
A1
SP1175
SP1176
RD25B22N
G622
ADF1
P604
J604
FT604
G624
RD25A22N
RD26A22N
P619
E607
COS MODE
SIN MODE
B+ ANT
B- LOOP
RF OUTPUT
GND
RD19A22
RD19B22
RD19C22
RD19D22
SP1173
SP1174
E30
+28 VDC R AVIONICS
CB607
ADF
P612
RD1B20
AE609
+28VDC PWR IN
28 VDC SW
H AUDIO IN
L AUDIO IN
H AUDIO OUT
PWR GND
IA CTL DATA IN
IB CTL DATA IN
IA CTL DATA OUT
IB CTL DATA OUT
DIM CONTROL
23-50-00
RD6A22
RD6B22
G602
RD3A22N
RD28A22N
RD29A22N
SP1171
SP1172
23-11-00
RD2A22
P617
2
TRIAXIAL ANTENNA LEAD WILL BE FAR-58. CABLE SHOULD NOT BE IN WITH OTHER CABLES THAT CONTAIN 400HZ POWER LINES, MAIN POWER BUSS, OR RF PULSE ANTENNA CABLES
1
TOTAL SYSTEM QUADRANT ERROR CORRECTION +17.

WM_345300AB

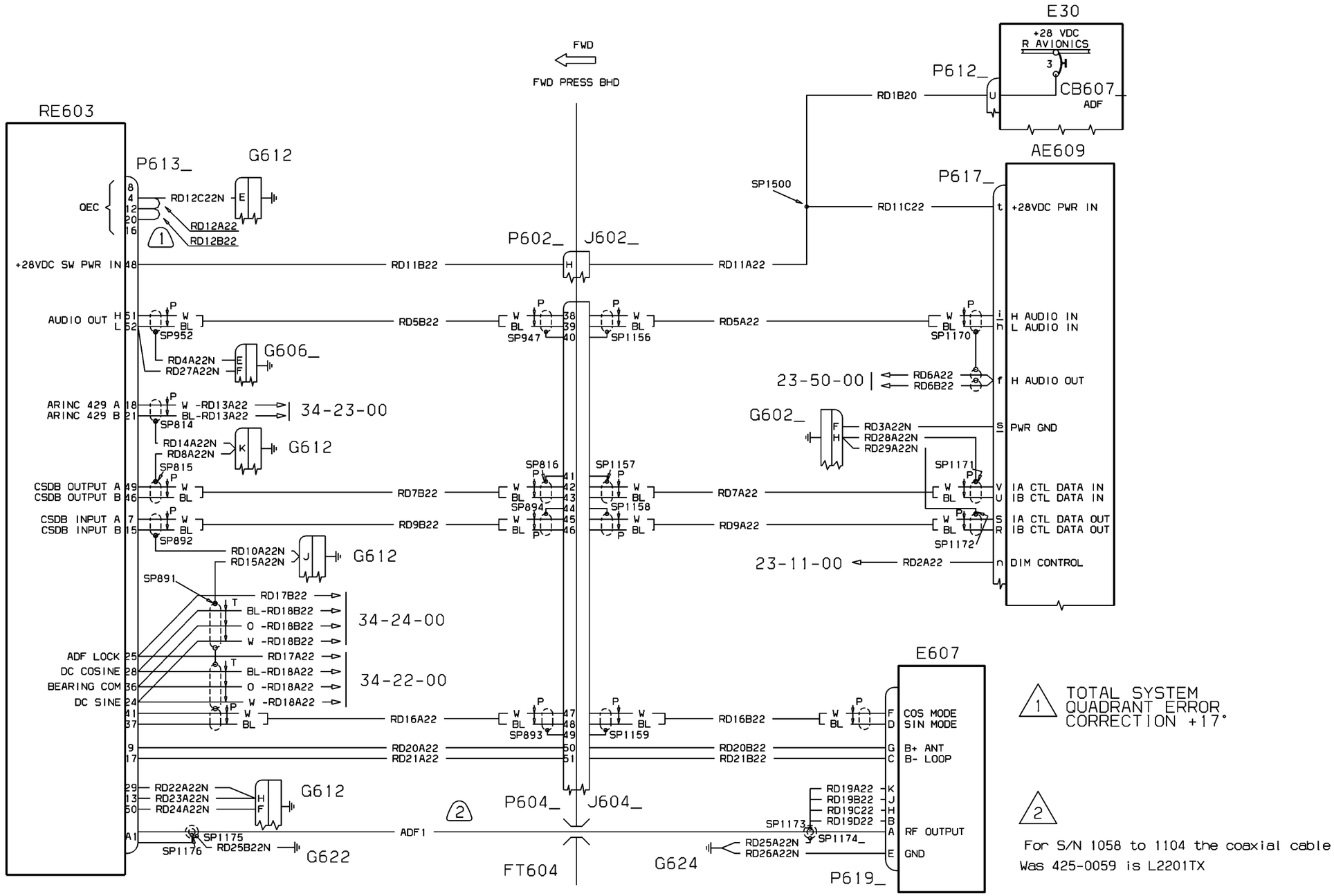


WM_345300_P2_S1

80-008610_E1/F4

| EFFECTIVITY: | DEPENDENT POSITION DETERMINING |
|---|---|
| 1016-1104 | ADF |

NOTE: ⚠1 Airplane with optional secondary DME installed

⚠2 From N//C 1058 to 1104 the coax cables
was RG58C/U is RG400/U
was RG214/U is RG393/U.

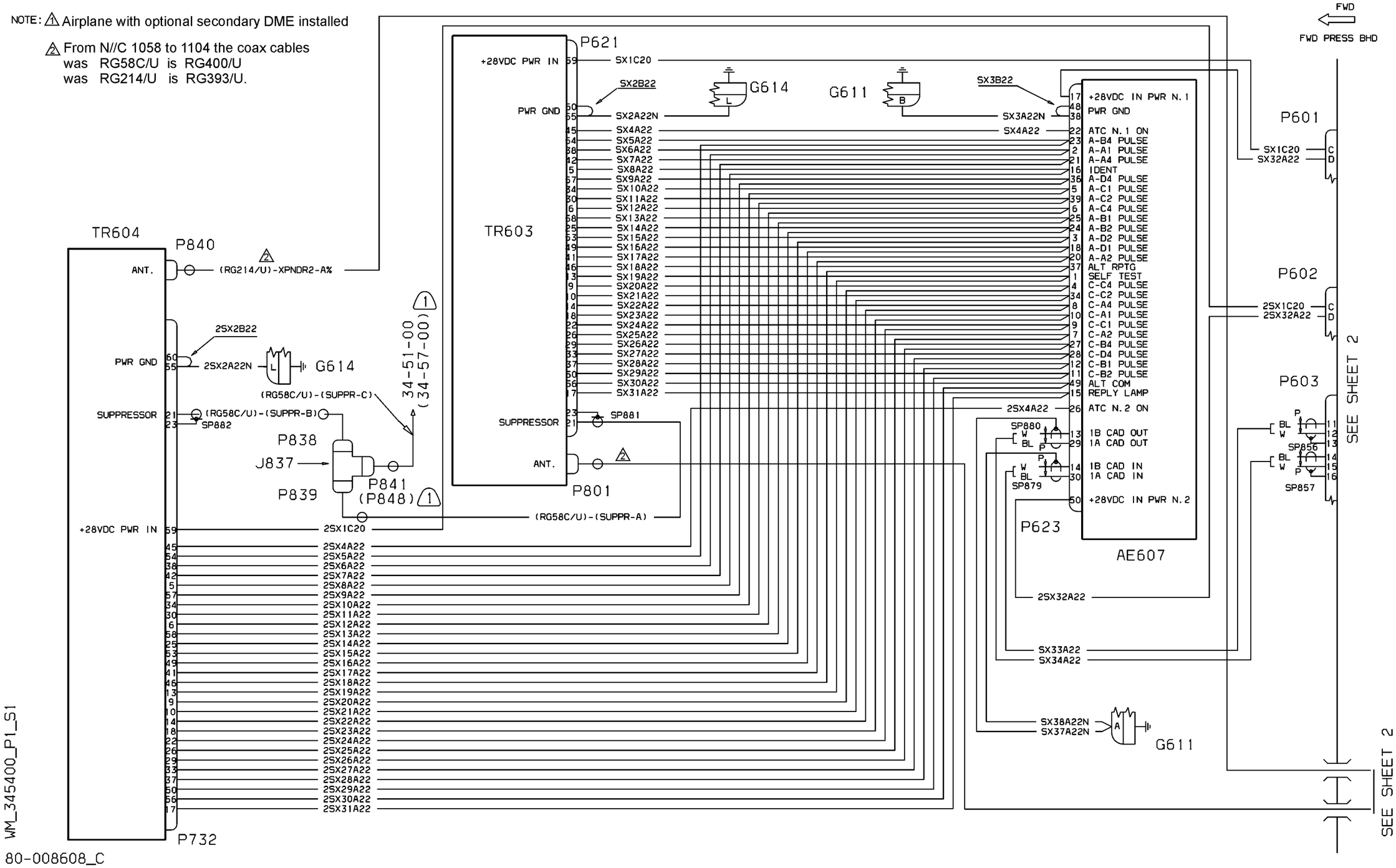


| EFFECTIVITY: | DEPENDENT POSITION DETERMINING<br>Dual Transponder |
|---|---|

**34-54-00**

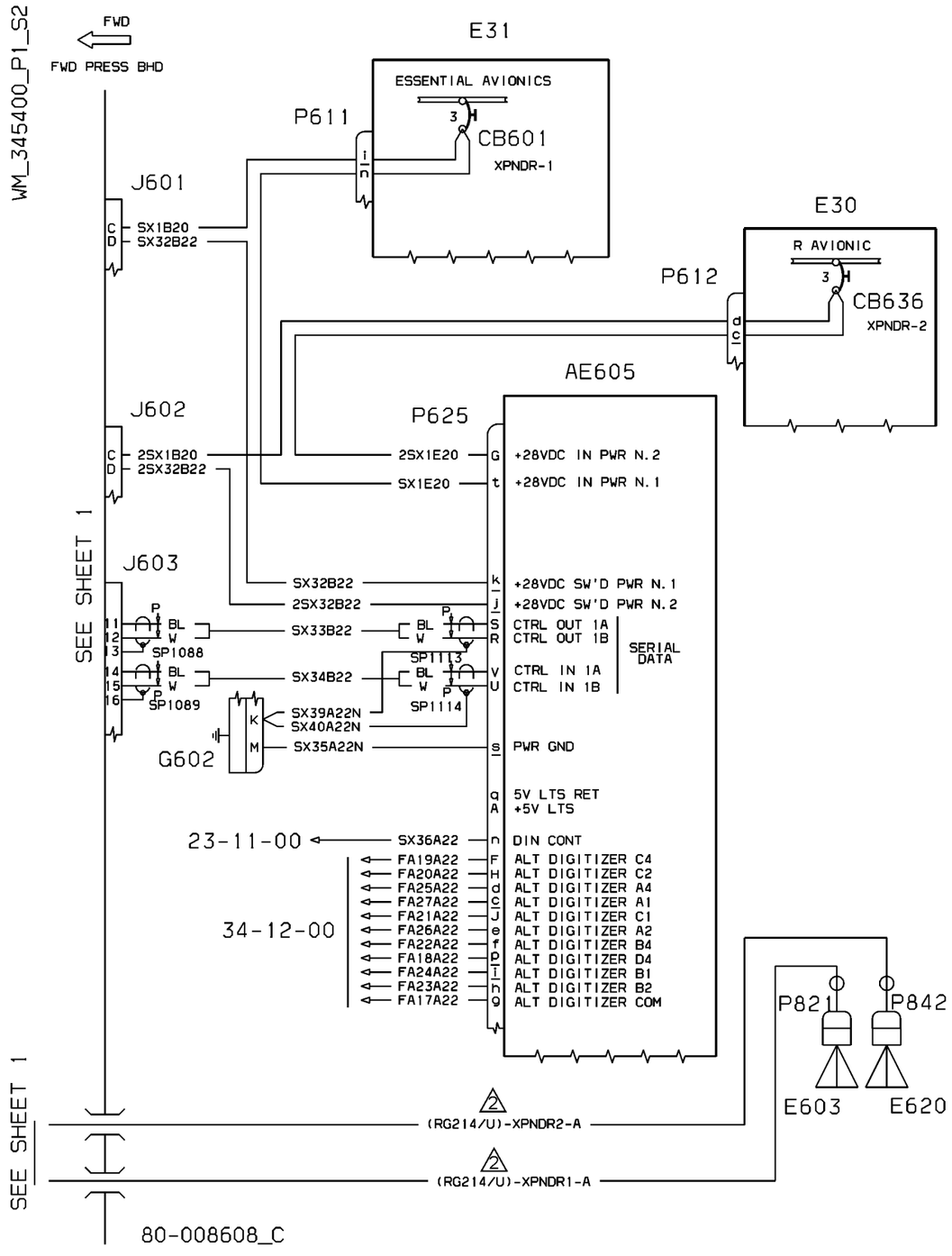


NOTE: P/N 622-6523-005 CONTROL PANEL REPLACED BY 622-6523-205 AS PER SPB 80-0006

2 From N//C 1058 to 1104 the coax cables was RG58C/U is RG400/U and was RG214/U is RG393/U.

| EFFECTIVITY: | DEPENDENT POSITION DETERMINING<br>Dual Transponder |
|---|---|

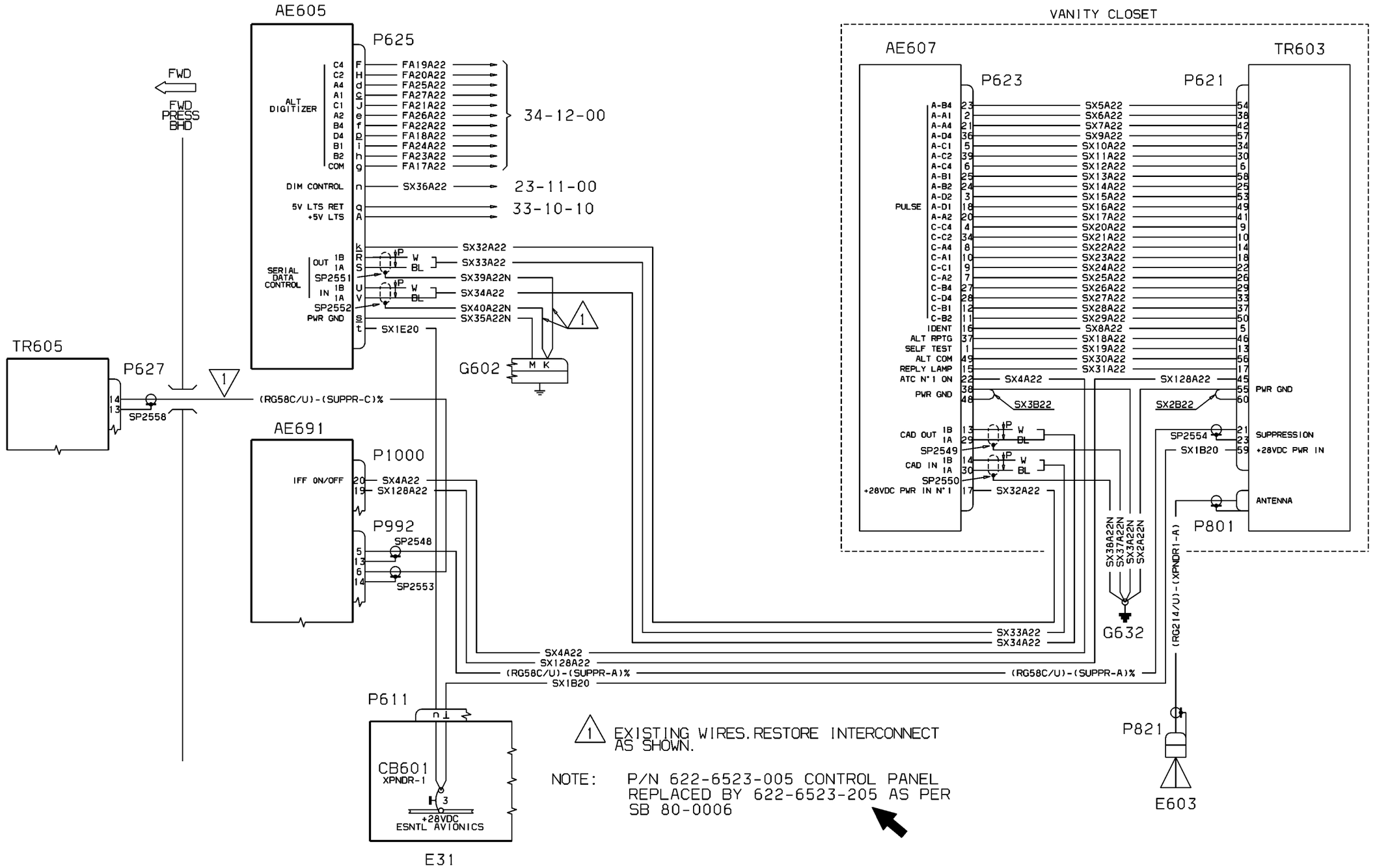


WM_345410KK

| EFFECTIVITY: | DEPENDENT POSITION DETERMINING<br>Transponder TDR 90 (Optional) |
|---|---|

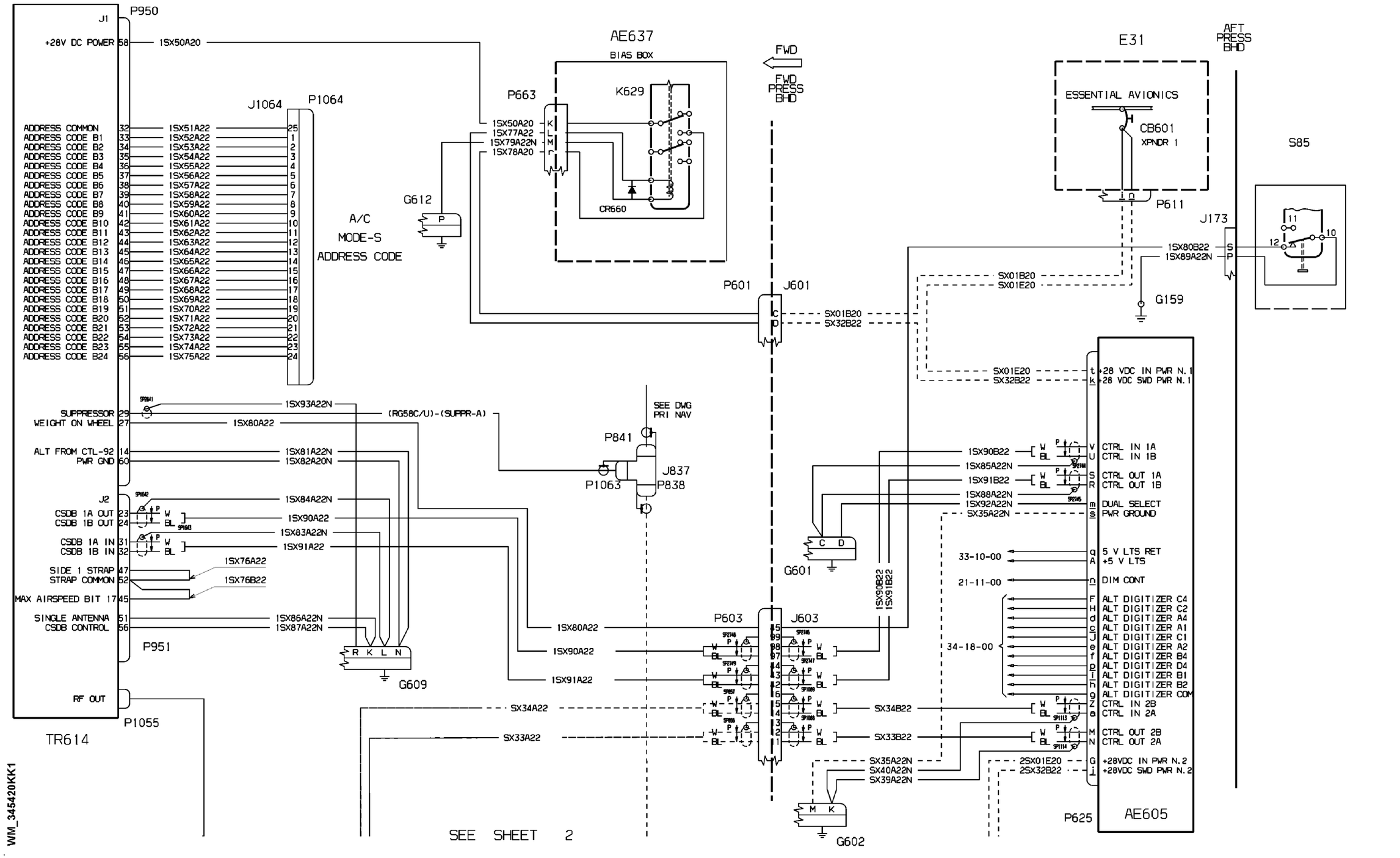


| EFFECTIVITY: | DEPENDENT POSITION DETERMINING<br>XPNDR TDR 90 / 94 MODE-S (Optional) |
|---|---|

**34-54-20**

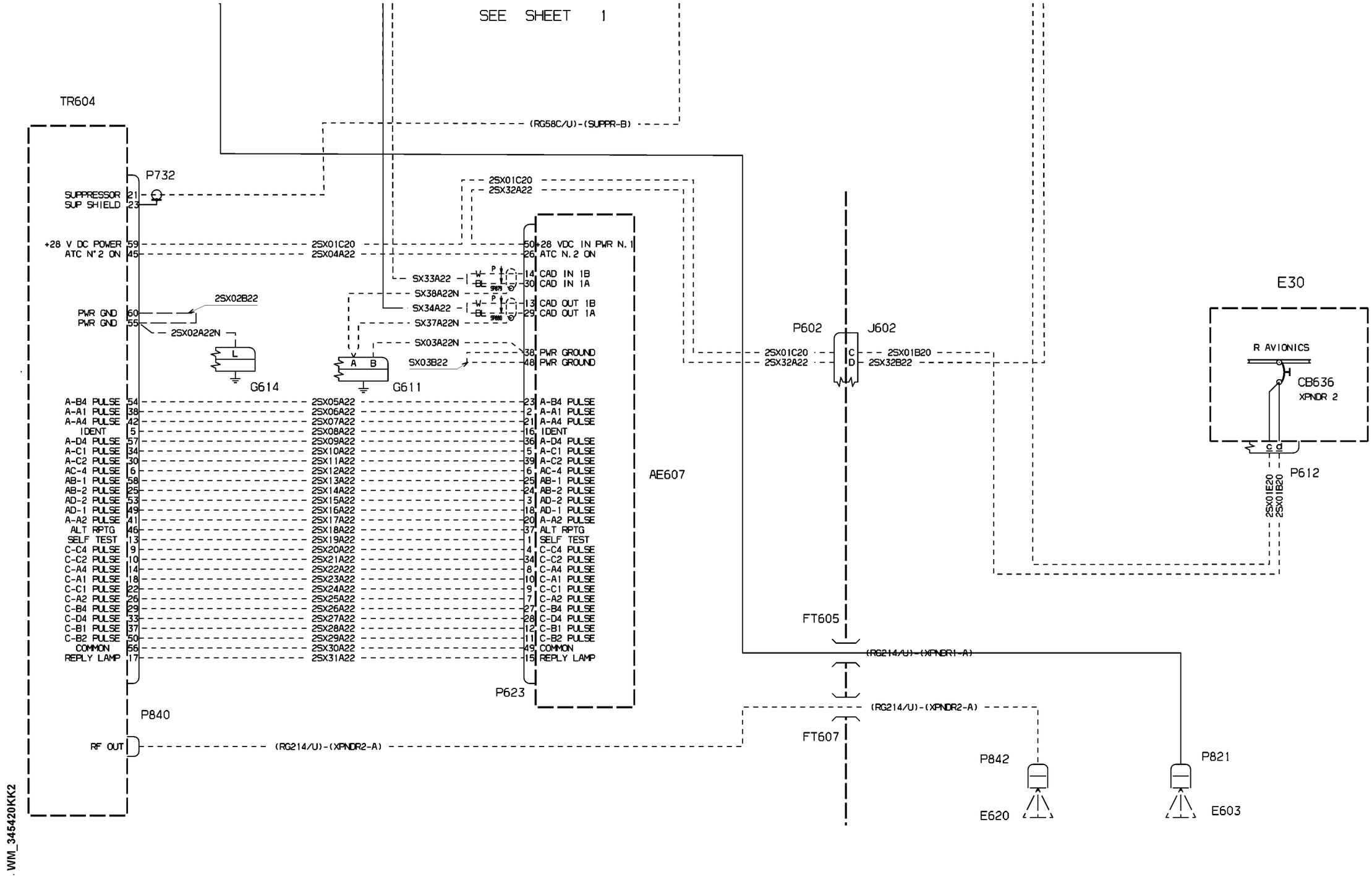


| EFFECTIVITY: | DEPENDENT POSITION DETERMINING<br>XPNDR TDR 90 / 94 MODE-S (Optional) |
|---|---|

NOTE: Diagram effect if SB 80-0773 embodied

1 For S/N 1016 see diagram to sheet 5

2 For S/N E.I. Configuration see diagram to chapter 34-54-21 pag 2

3 For S/N AMI.2 Configuration see diagram to chapter 34-54-21 pag 3

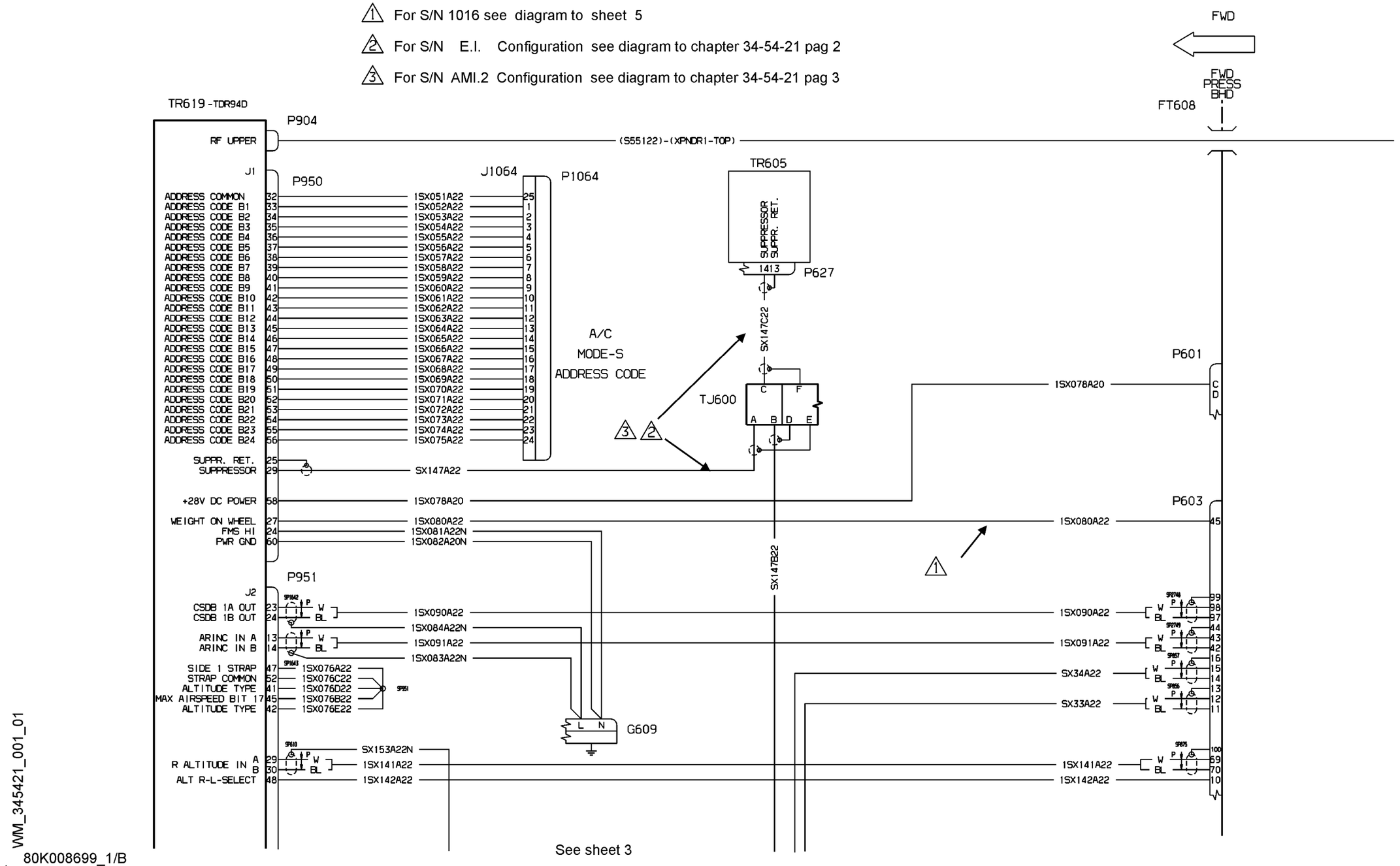


| EFFECTIVITY: | DEPENDENT POSITION DETERMINING<br>Mode S EHS with Uns connection (opt.) |
|---|---|

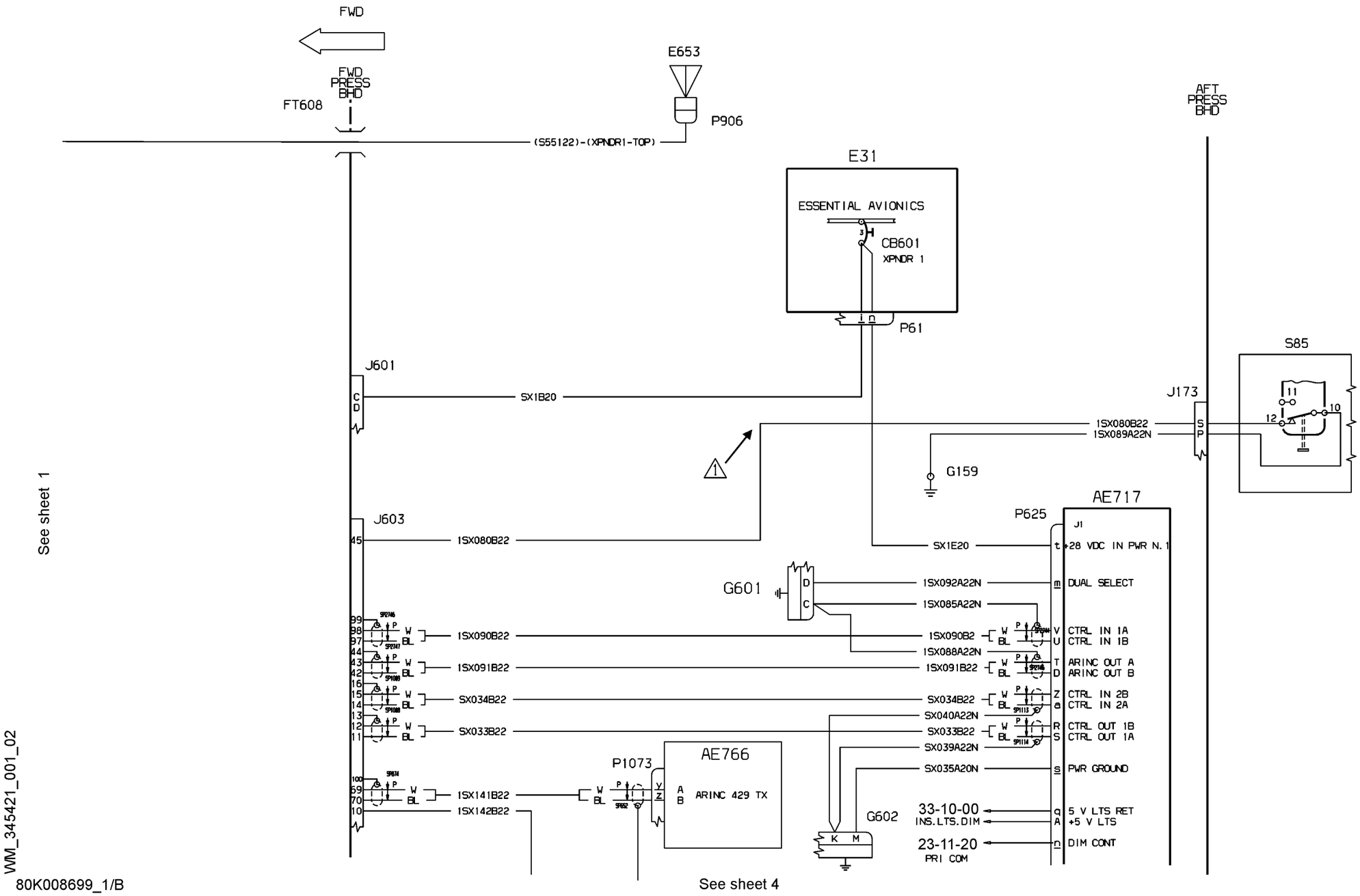


| EFFECTIVITY: | DEPENDENT POSITION DETERMINING<br>Mode S EHS with Uns connection (opt.) |
|---|---|

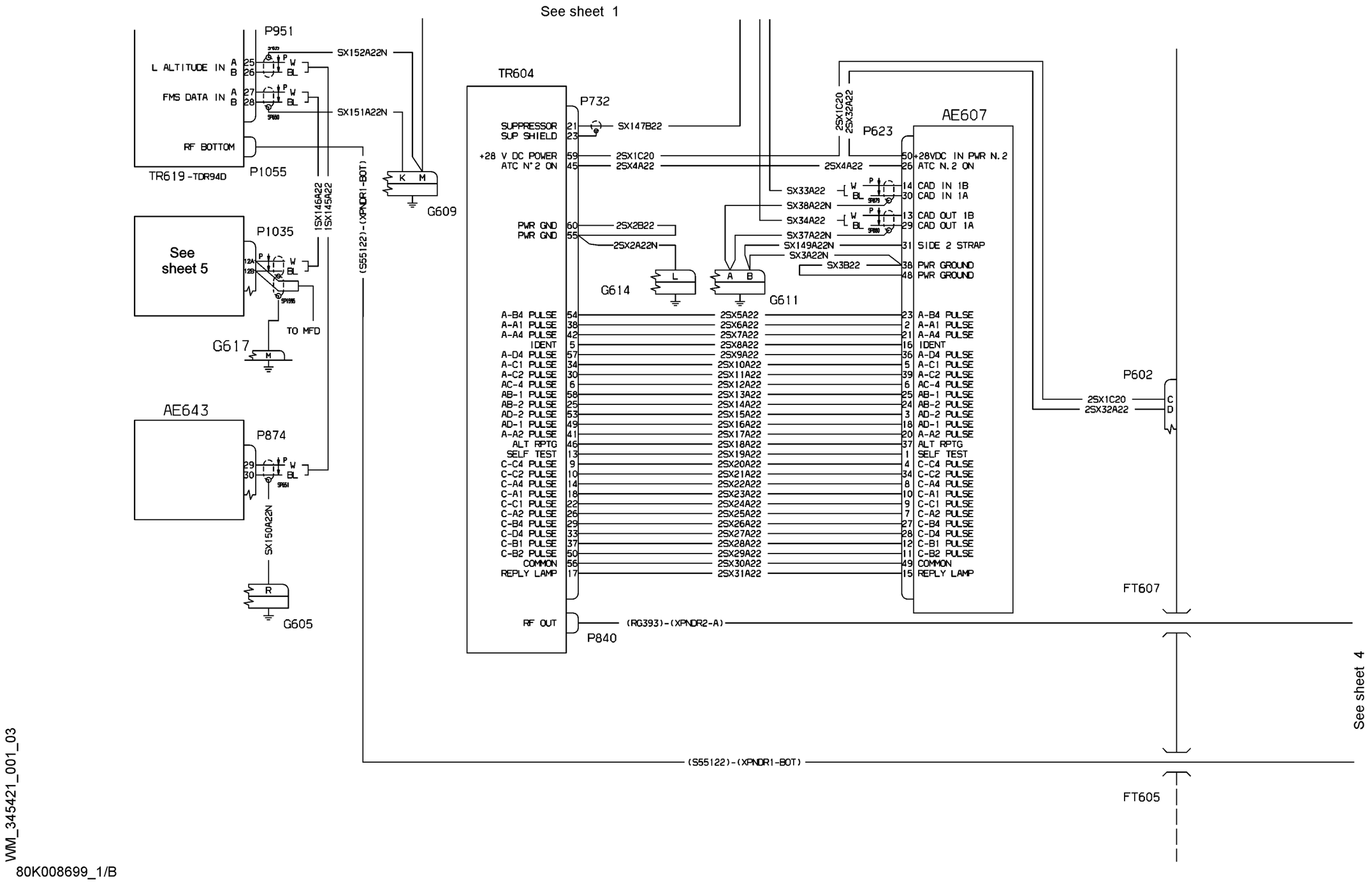


VM_345421_001_03

80K008699_1/B

| EFFECTIVITY: | DEPENDENT POSITION DETERMINING<br>Mode S EHS with Uns connection (opt.) |
|---|---|

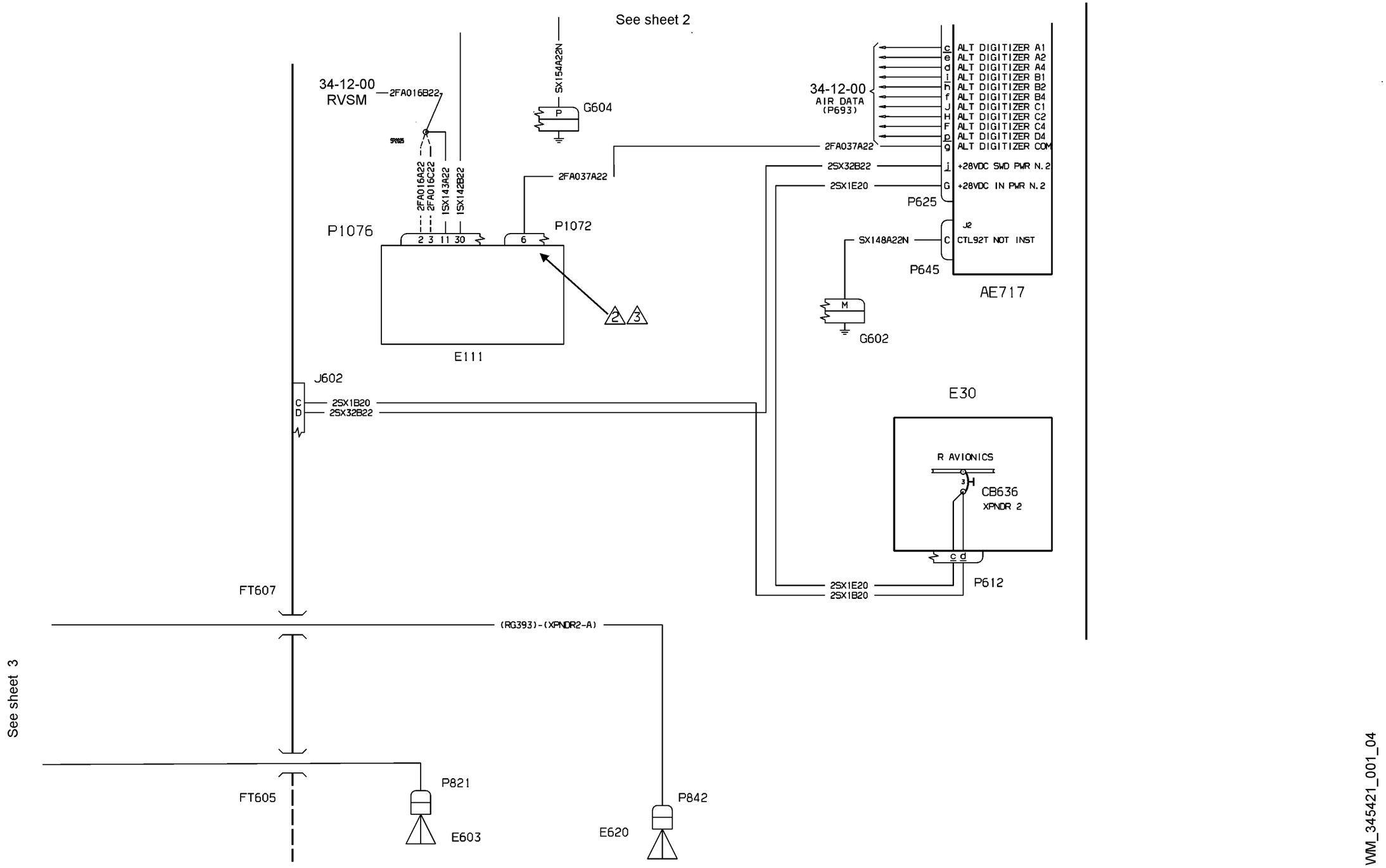


WM_345421_001_04

80K008699_1/B

80K008699_1/B

WM_345421_001_05

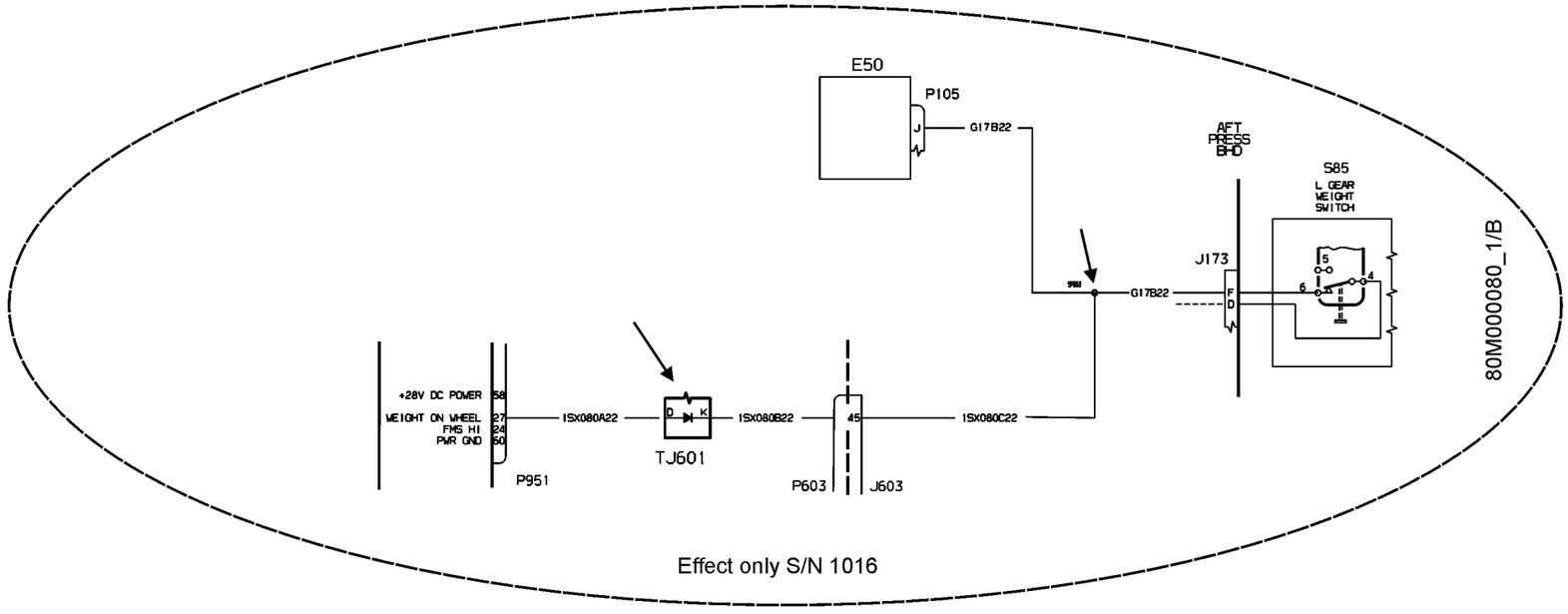


Effect only S/N 1016

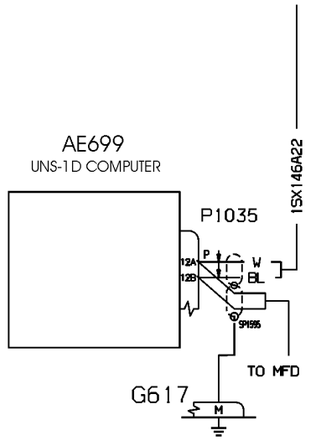


Diagram effect S/N with UNS-1D connections

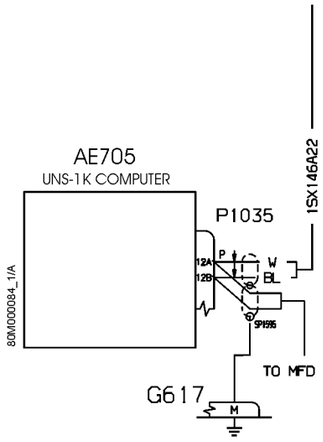


Diagram effect S/N with UNS-1K connections

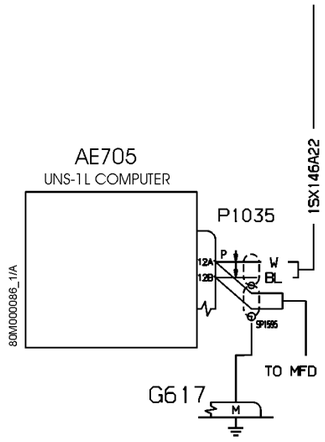


Diagram effect S/N with UNS-1L connections

| EFFECTIVITY: | DEPENDENT POSITION DETERMINING<br>Mode S EHS with Uns connection (opt.) |
|---|---|

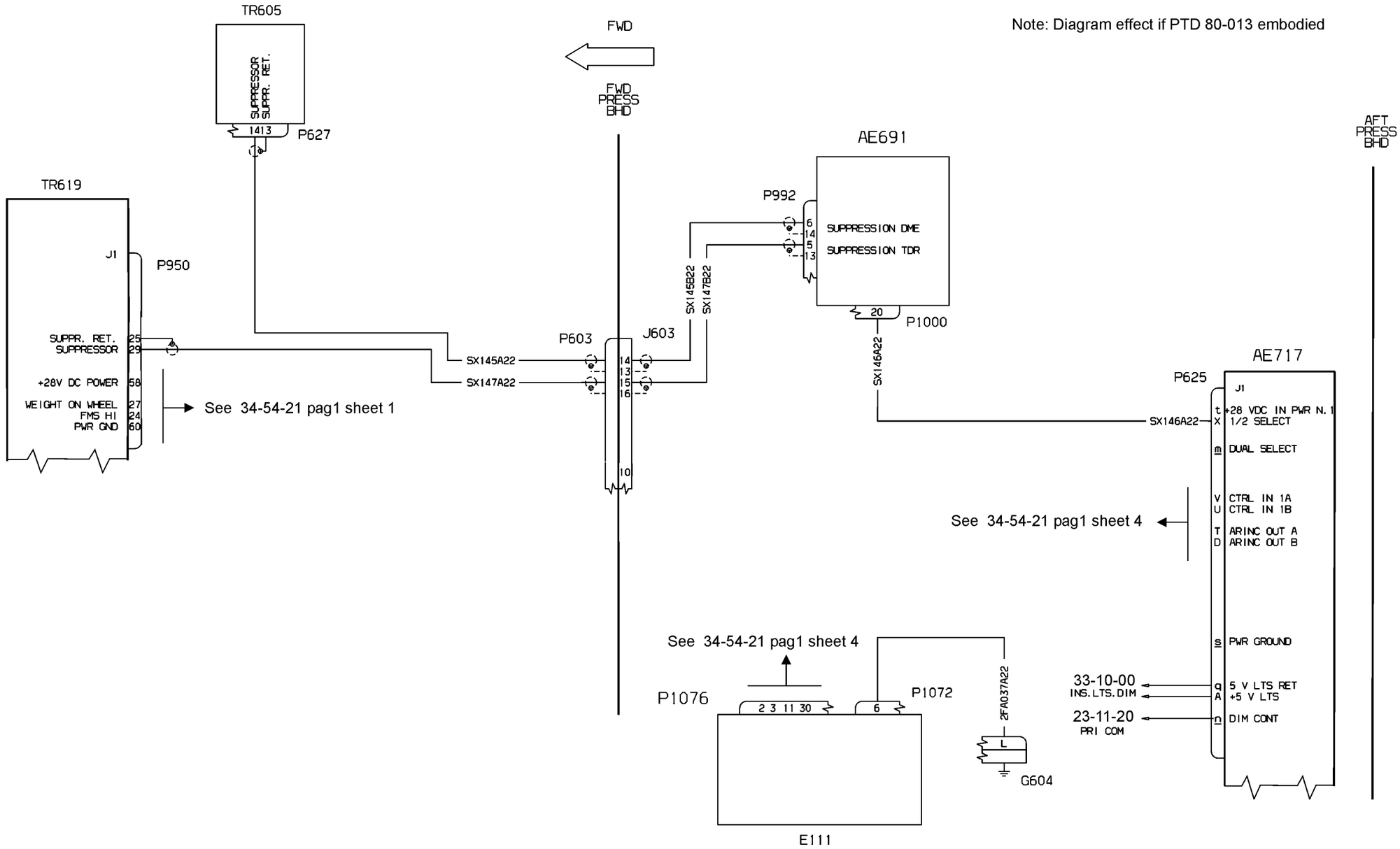


WM_345421_002_01

80M000137_1/A

| EFFECTIVITY: | DEPENDENT POSITION DETERMINING<br>Mode S EHS for E.I. configuration (opt.) |
|---|---|

Note: Diagram effect if PTD 80-011 embodied

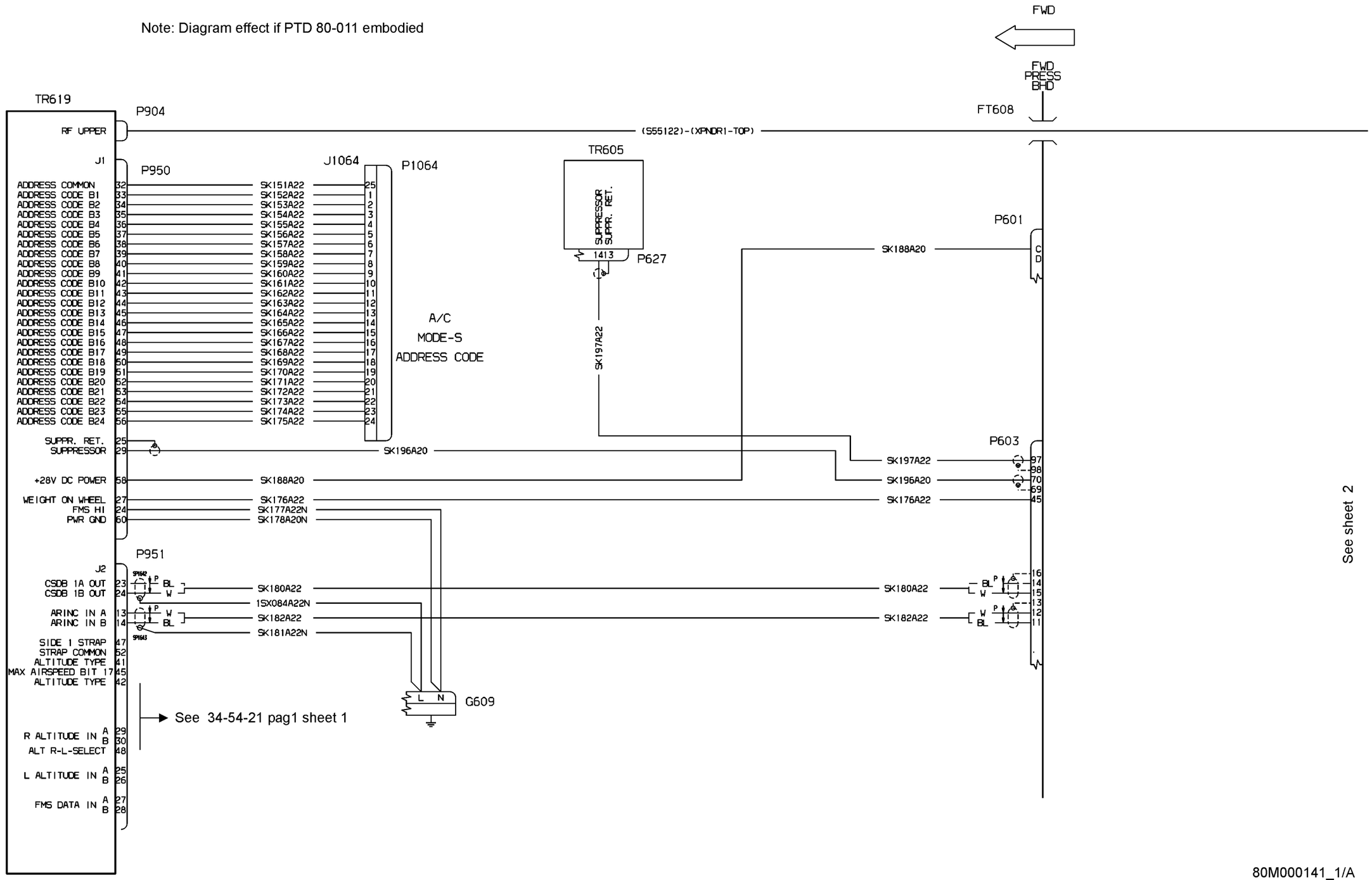


| EFFECTIVITY: | DEPENDENT POSITION DETERMINING<br>Mode S EHS for AMI 2 Configuration (opt.) |
|---|---|

**34-54-21**

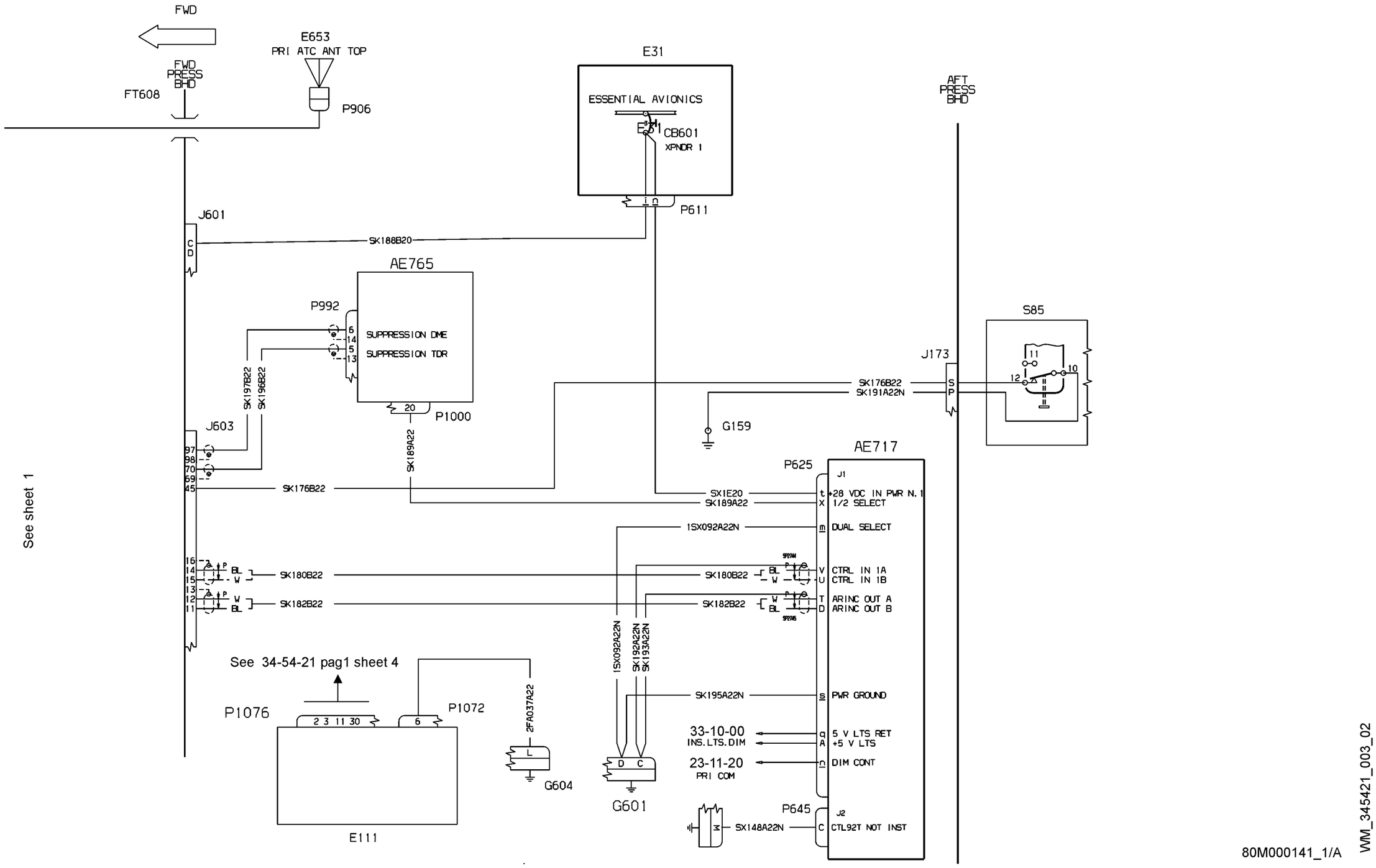


80M000141_1/A

WM_345421_003_02

Note: Diagram effect if PTD 80-016 embodied

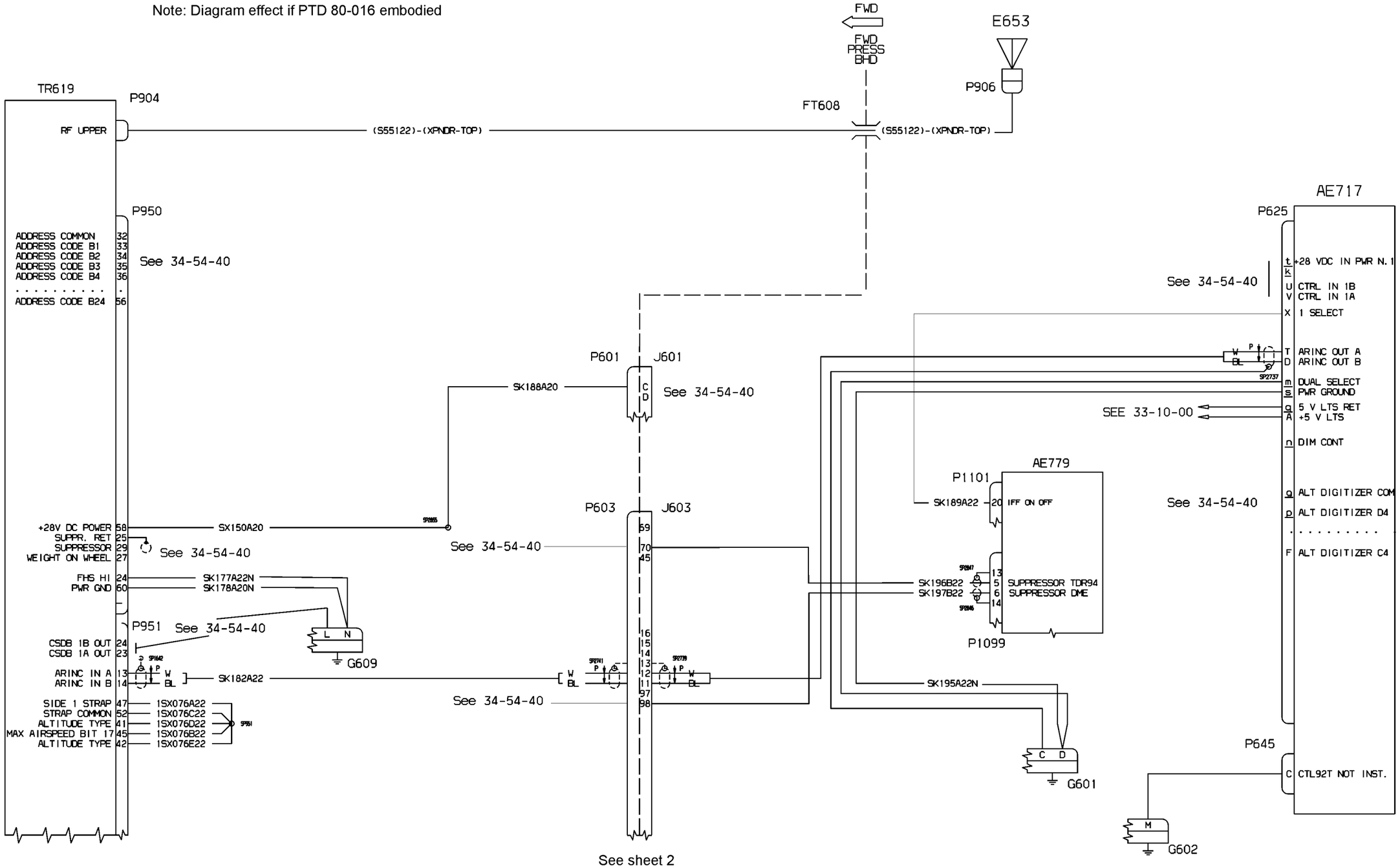


See sheet 2

| EFFECTIVITY: | DEPENDENT POSITION DETERMINING<br>Mode S EHS for M.M. Configuration (opt.) |
|---|---|

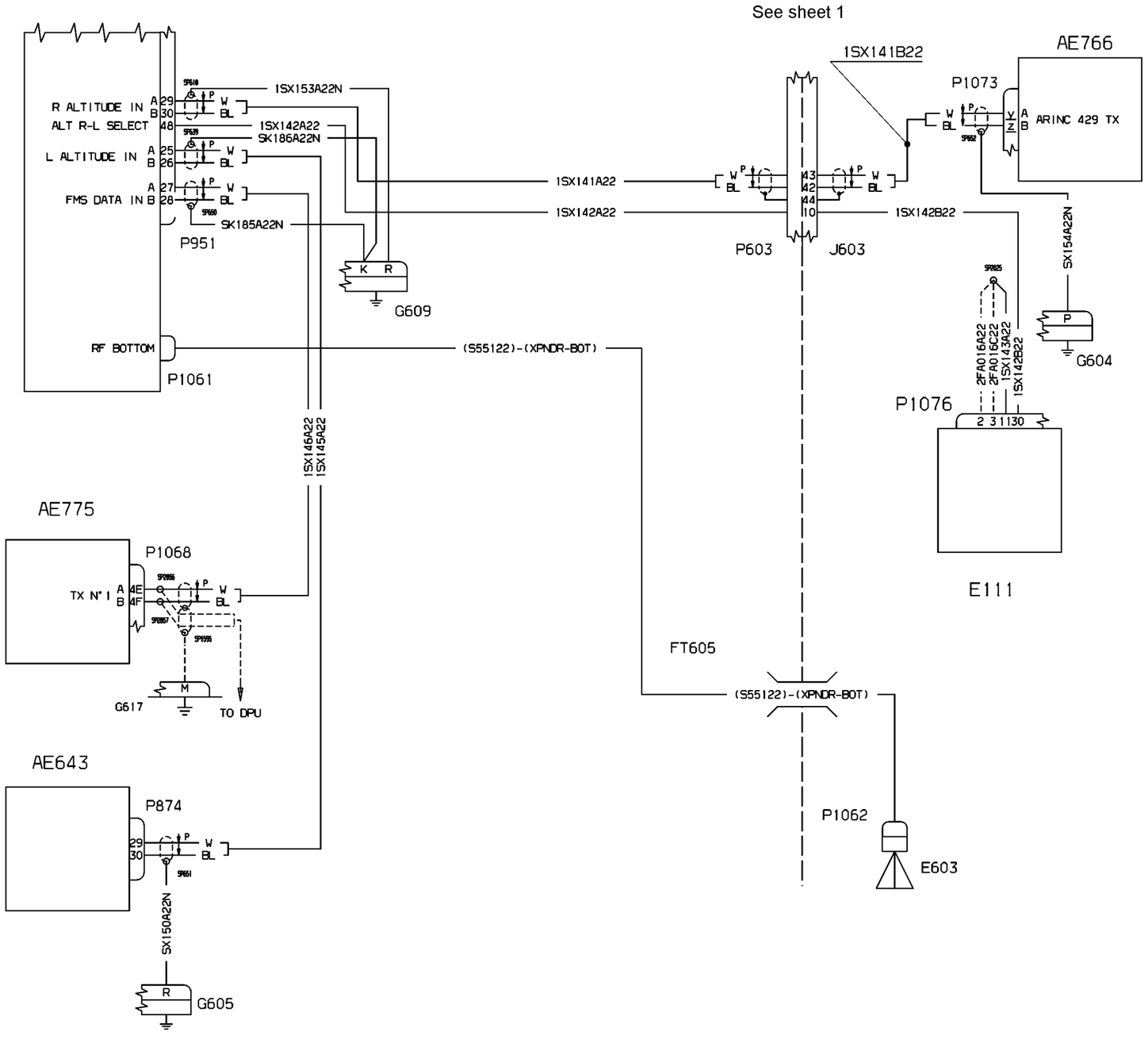
See sheet 1
R ALTITUDE IN A 29 B 30
ALT R-L SELECT 48
L ALTITUDE IN A 25 B 26
FMS DATA IN A 27 B 28
1SX153A22N
1SX142A22
SK186A22N
SK185A22N
P951
1SX141A22
1SX142A22
P603
J603
1SX141B22
AE766
P1073
ARINC 429 TX
1SX142B22
SX154A22N
G604
G609
K R
RF BOTTOM
(S55122)-(XPNDR-BOT)
P1061
2FA016A22
2FA016C22
1SX143A22
1SX142B22
P1076
2 3 1 1 30
E111
1SX146A22
1SX145A22
AE775
P1068
TX N° 1 A 4E B 4F
G617
TO DPU
FT605
(S55122)-(XPNDR-BOT)
AE643
P874
29
30
SX150A22N
G605
P1062
E603

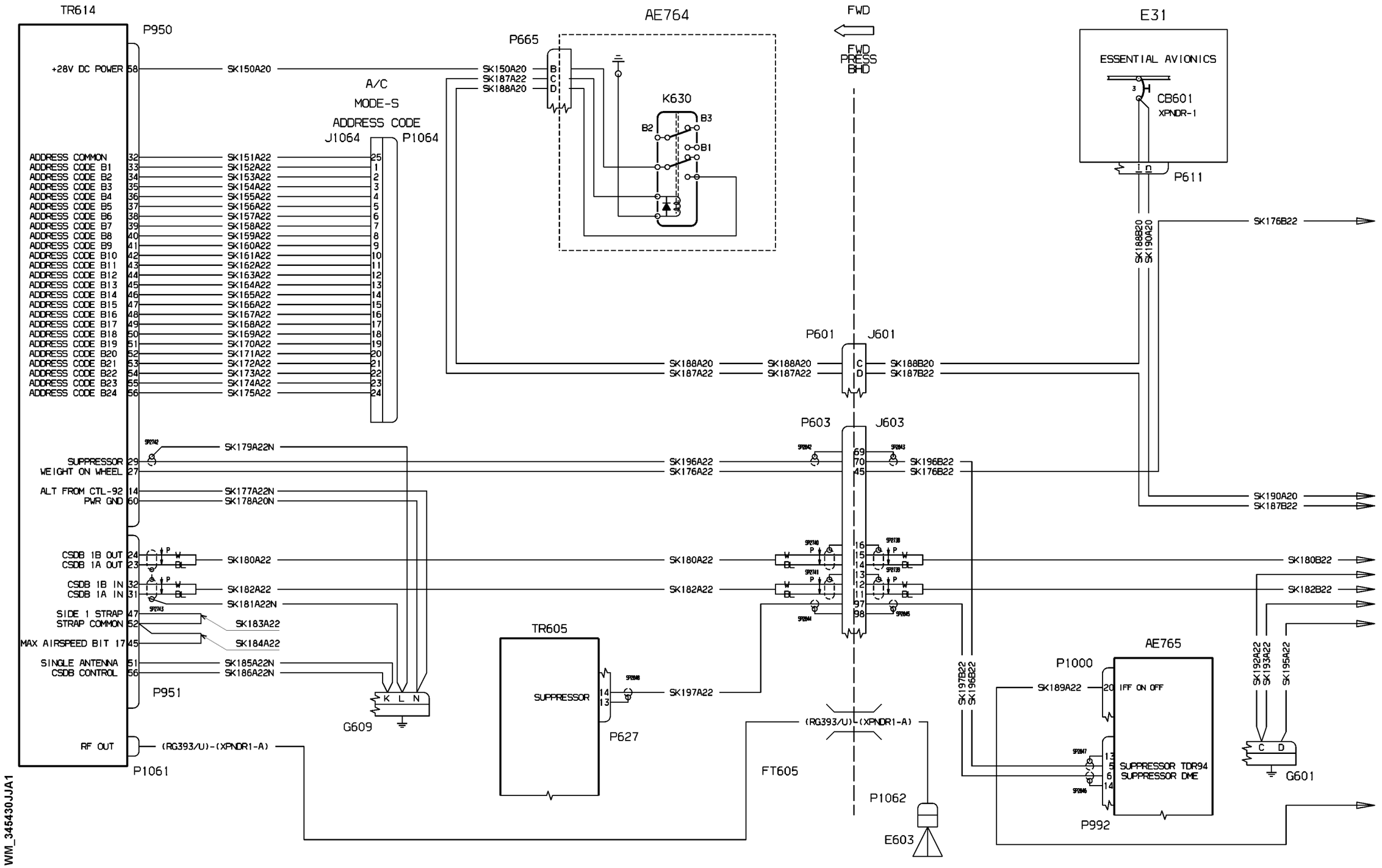


WM_345430JJA1

| EFFECTIVITY: | DEPENDENT POSITION DETERMINING<br>XPNDR TDR 94 MODE-S/IFF (OPT. SMA) |
|---|---|

**34-54-30**

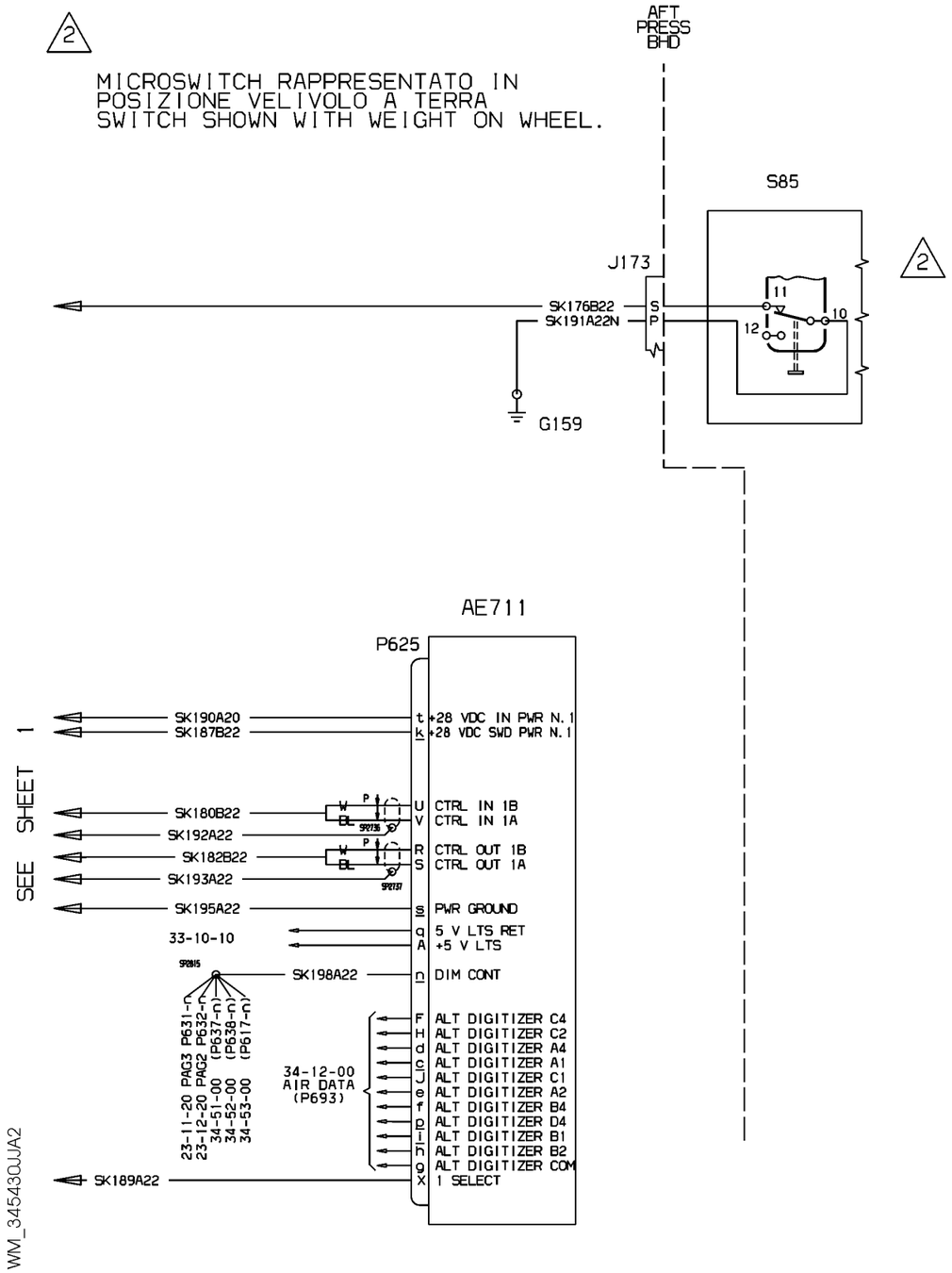


| EFFECTIVITY: | DEPENDENT POSITION DETERMINING<br>XPNDR TDR 94 MODE-S/IFF (OPT. SMA) |
|---|---|

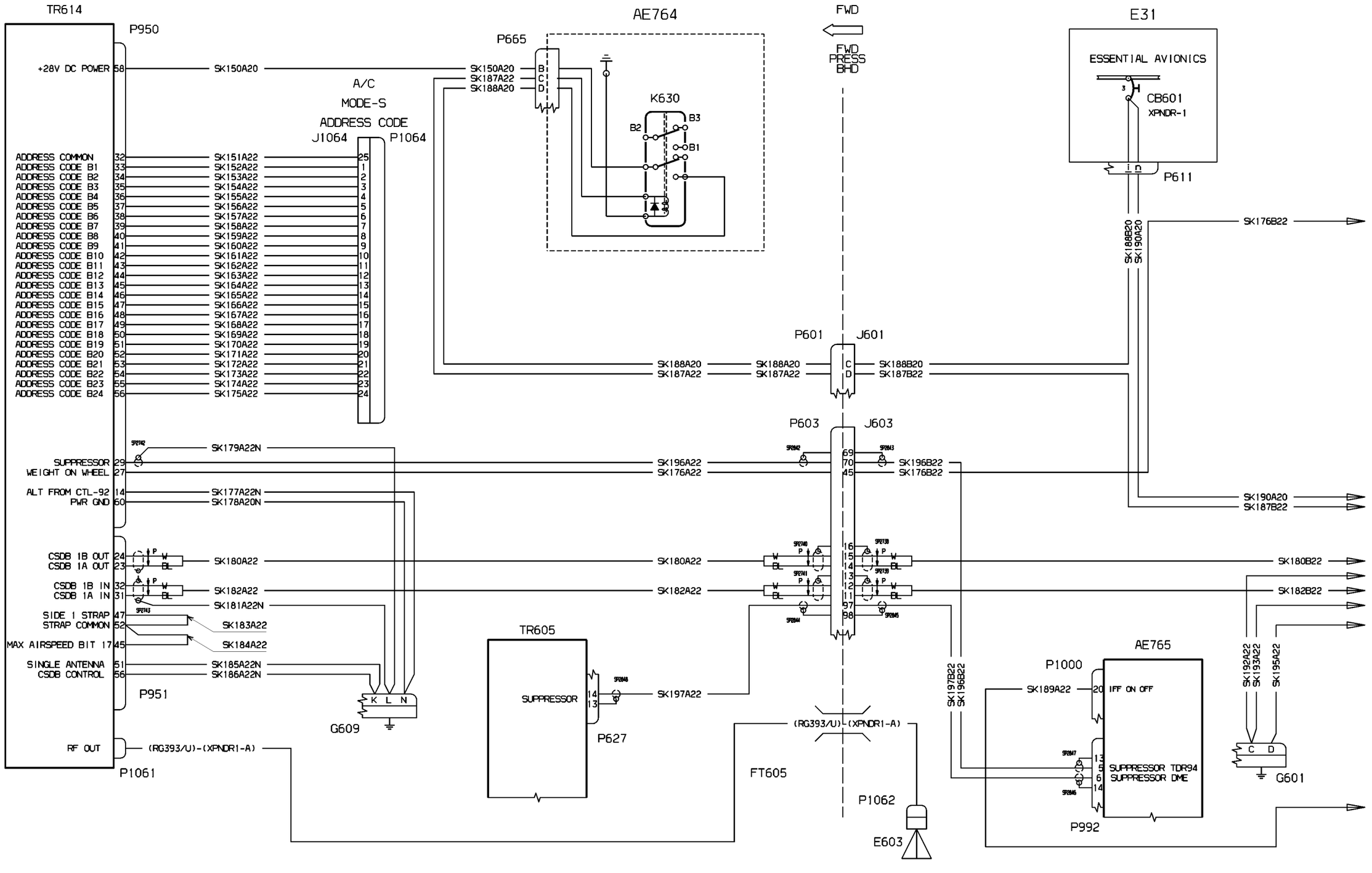


WM_345440JJA1

| EFFECTIVITY: | DEPENDENT POSITION DETERMINING |
|---|---|
| 1076,1085,1090 | XPNDR TDR 94 MODE-S/IFF-TCAS-RVSM (opt. M.M.) |

**34-54-40**

WM_345440JA2

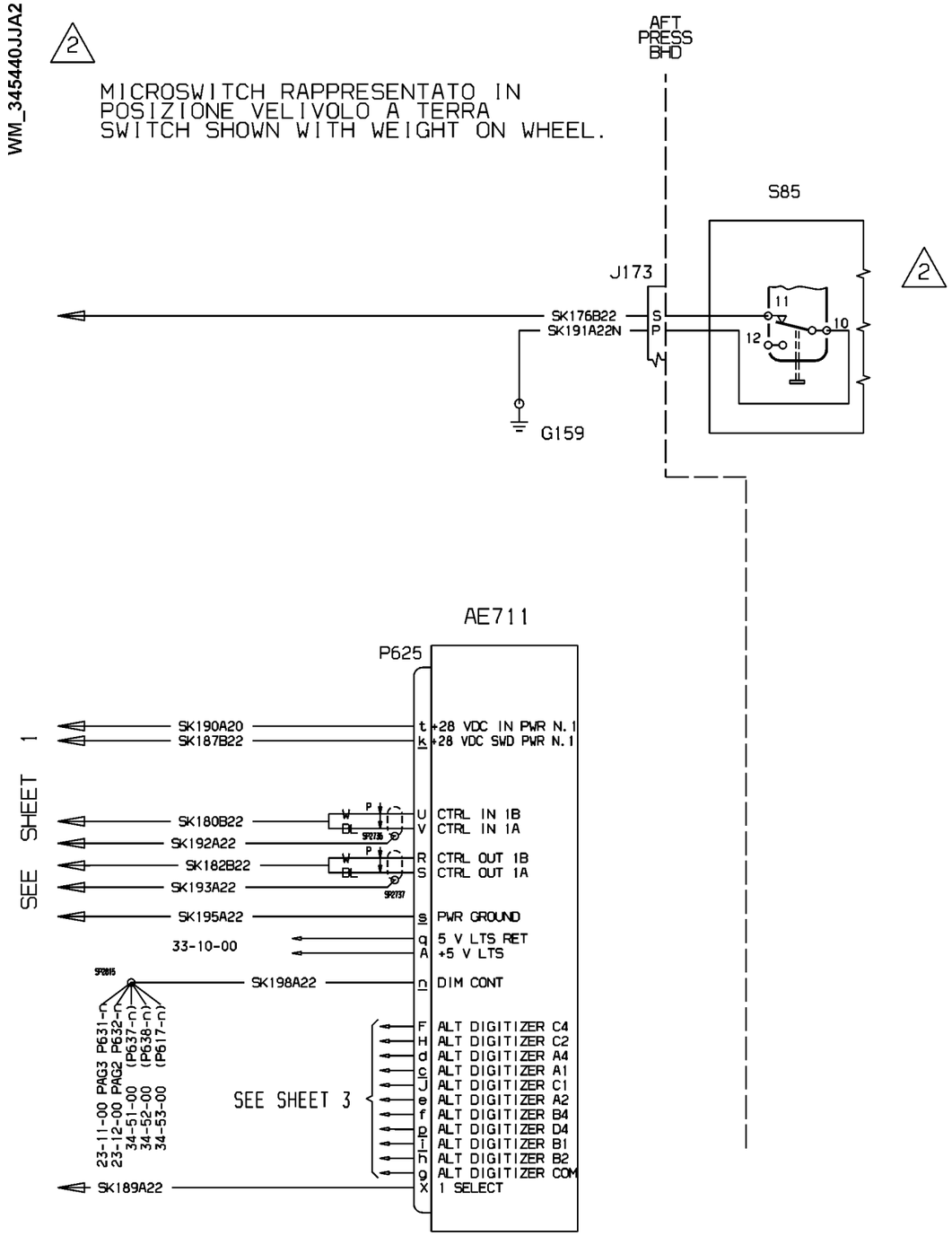


| EFFECTIVITY: | DEPENDENT POSITION DETERMINING |
|---|---|
| 1076,1085,1090 | XPNDR TDR 94 MODE-S/IFF-TCAS-RVSM (opt. M.M.) |

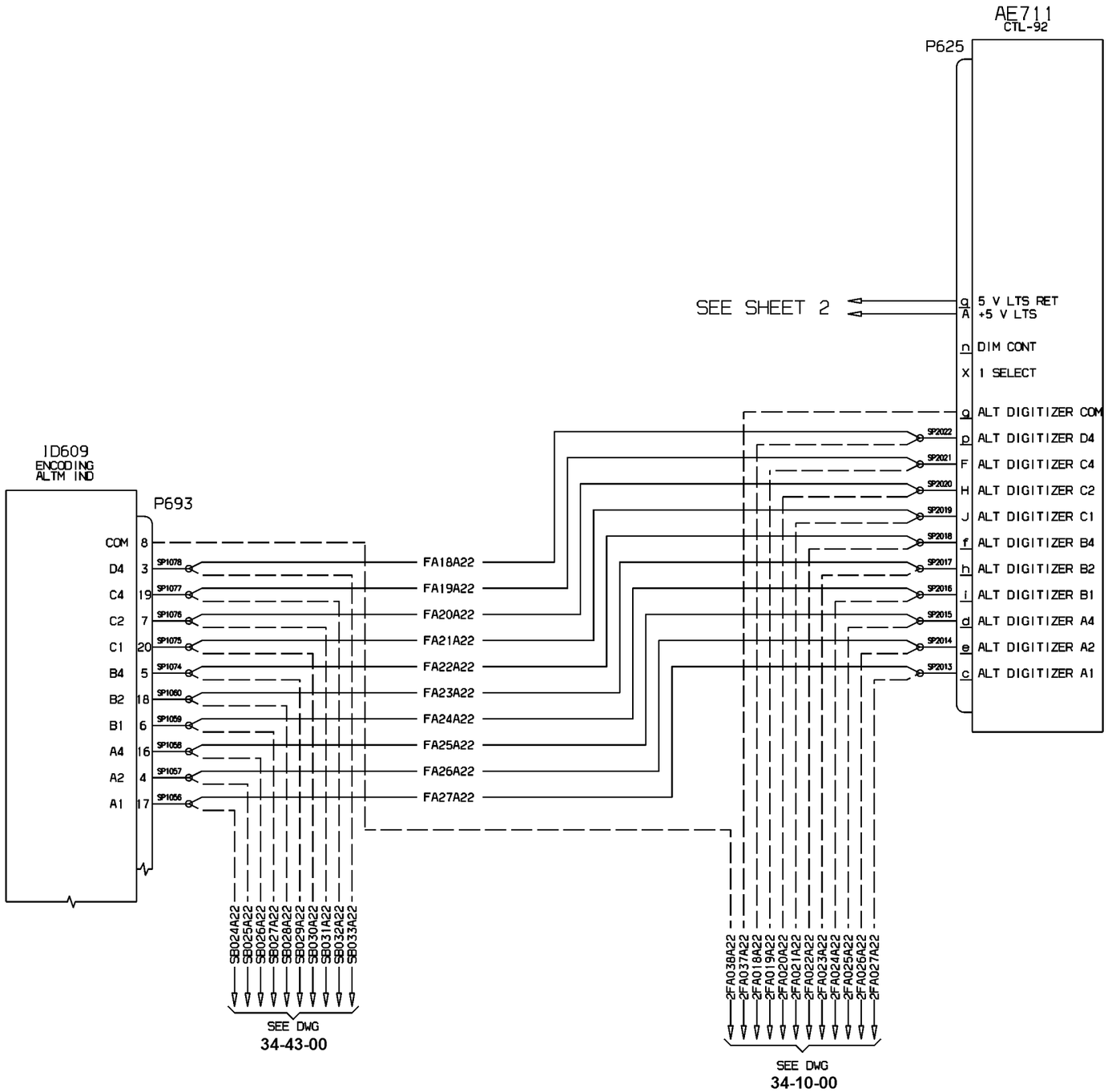


-TABLE 1-

| | WRITE IN YOUR ASSIGNED 8-DIGIT OCTAL CODE HERE | | | | | | | |
|---|---|---|---|---|---|---|---|---|
| OCTAL DIGIT | | | | | | | | |
| 0 | NONE | NONE | NONE | NONE | NONE | NONE | NONE | NONE |
| 1 | P1-35 | P1-38 | P1-41 | P1-44 | P1-47 | P1-50 | P1-53 | P1-56 |
| 2 | P1-34 | P1-37 | P1-40 | P1-43 | P1-46 | P1-49 | P1-52 | P1-55 |
| 3 | P1-34<br>P1-35 | P1-37<br>P1-38 | P1-40<br>P1-41 | P1-43<br>P1-44 | P1-46<br>P1-47 | P1-49<br>P1-50 | P1-52<br>P1-53 | P1-55<br>P1-56 |
| 4 | P1-33 | P1-36 | P1-39 | P1-42 | P1-45 | P1-48 | P1-51 | P1-54 |
| 5 | P1-33<br>P1-35 | P1-36<br>P1-38 | P1-39<br>P1-41 | P1-42<br>P1-44 | P1-45<br>P1-47 | P1-48<br>P1-50 | P1-51<br>P1-53 | P1-54<br>P1-56 |
| 6 | P1-33<br>P1-34 | P1-36<br>P1-37 | P1-39<br>P1-40 | P1-42<br>P1-43 | P1-45<br>P1-46 | P1-48<br>P1-49 | P1-51<br>P1-52 | P1-54<br>P1-55 |
| 7 | P1-33<br>P1-34<br>P1-35 | P1-36<br>P1-37<br>P1-38 | P1-39<br>P1-40<br>P1-41 | P1-42<br>P1-43<br>P1-44 | P1-45<br>P1-46<br>P1-47 | P1-48<br>P1-49<br>P1-50 | P1-51<br>P1-52<br>P1-53 | P1-54<br>P1-55<br>P1-56 |

⚠2 MICROSWITCH RAPPRESENTATO IN POSIZIONE VELIVOLO A TERRA
SWITCH SHOWN WITH WEIGHT ON WHEEL.

⚠1 MODE-S IS SELECTED BEFORE AIRCRAFT DELIVERY, THROUGH STRAPPING OF THE APPROPRIATE ADDRESS PIN (SEE TABLE 1)
AIRCRAFT OPERATOR SHALL REQUEST MODE S ADDRESS TO THE APPROPRIATE REGULATORY AGENCY IN THE COUNTRY WHERE THE AIRCRAFT IS REGISTERED.

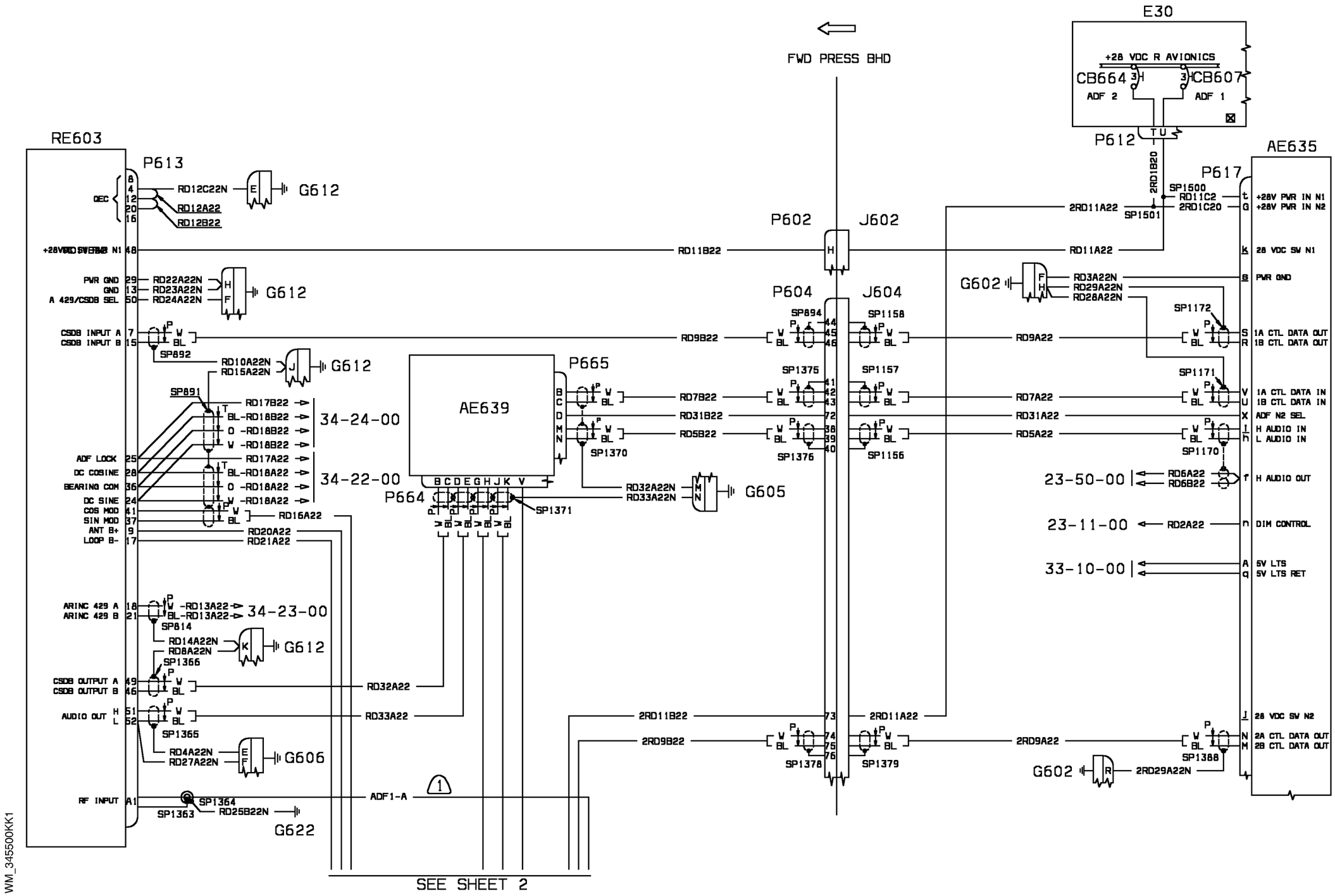
FWD PRESS BHD
E30
+28 VDC R AVIONICS
CB664
CB607
ADF 2
ADF 1
P612
2RD1B20
AE635
P617
SP1500
SP1501
RE603
P613
G612
G602
G622
G605
P602
J602
P604
J604
P665
AE639
P664
SP1370
SP1371
SP1372
SP1373
SP1374
SP1375
SP1376
SP1377
SP1378
SP1379
SP1380
SP1381
SP1382
SP1383
SP1384
SP1385
SP1386
SP1387
SP1388
SP1389
SP1390
SP1391
SP1392
SP1393
SP1394
SP1395
SP1396
SP1397
SP1398
SP1399
SP1400
SP1401
SP1402
SP1403
SP1404
SP1405
SP1406
SP1407
SP1408
SP1409

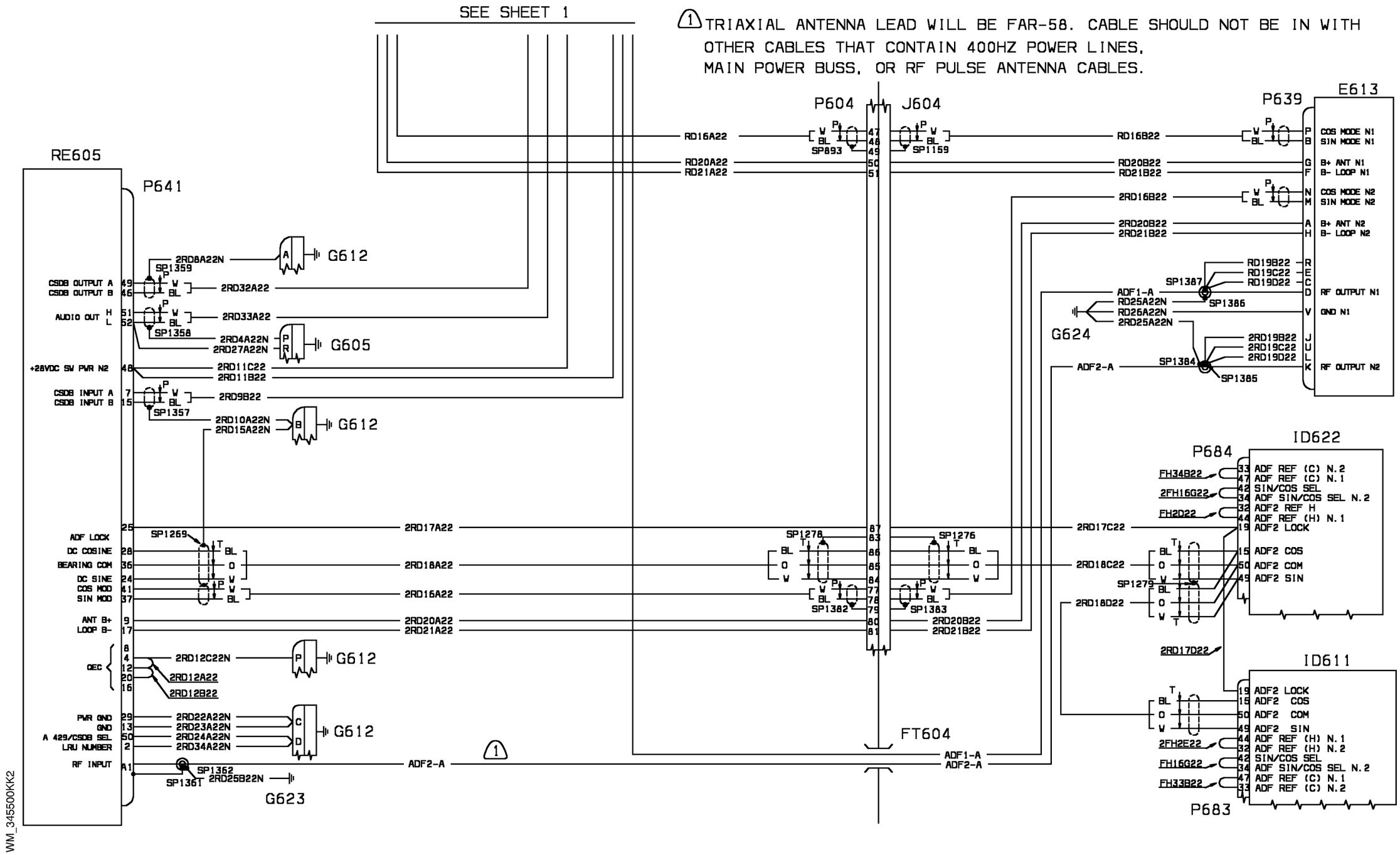


| EFFECTIVITY: | DEPENDENT POSITION DETERMINING<br>Dual ADF (Optional) |
|---|---|

**34-55-00**

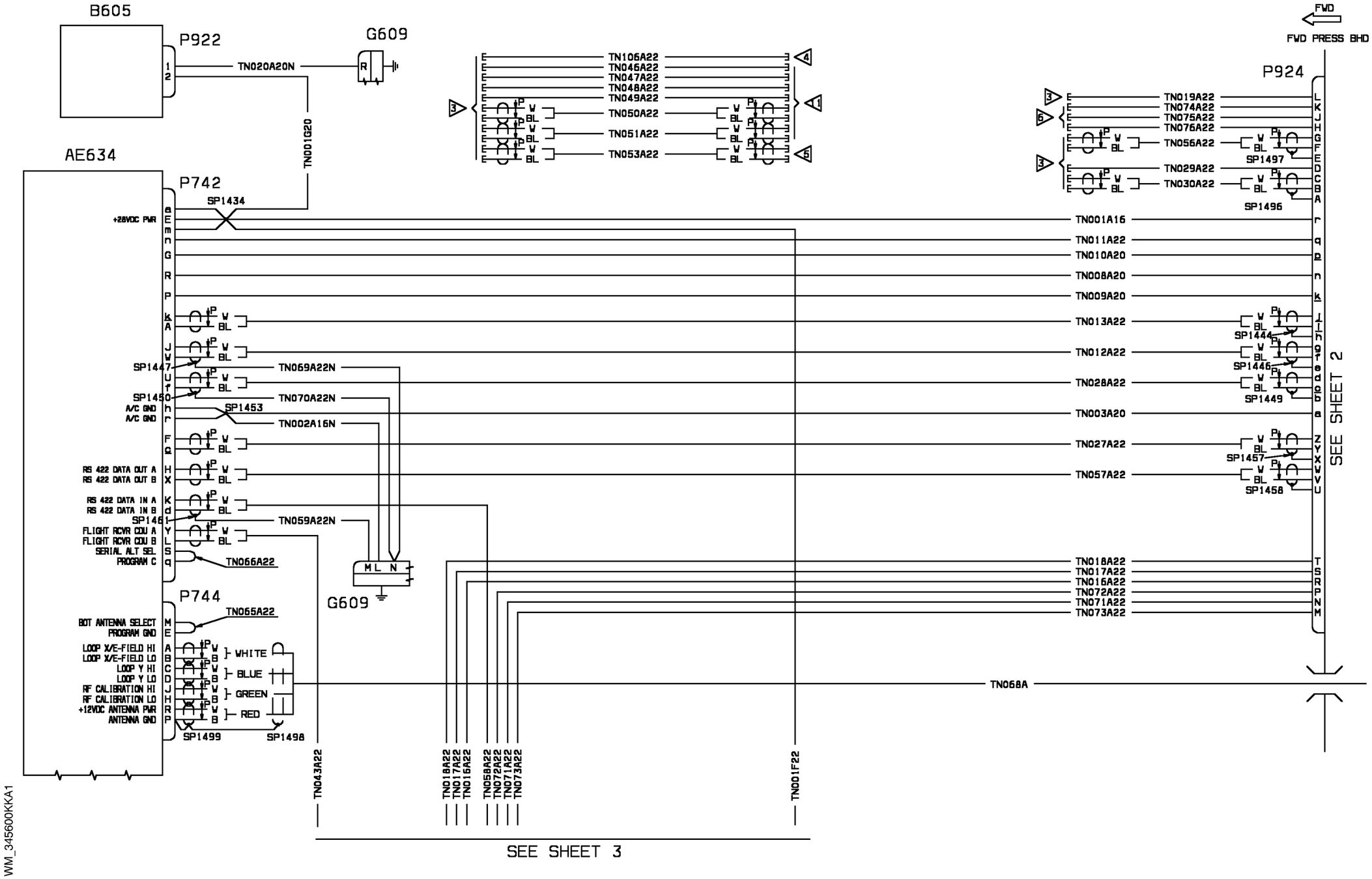


| EFFECTIVITY: | DEPENDENT POSITION DETERMINING<br>Loran Omega (Optional) |
|---|---|

**34-56-00**

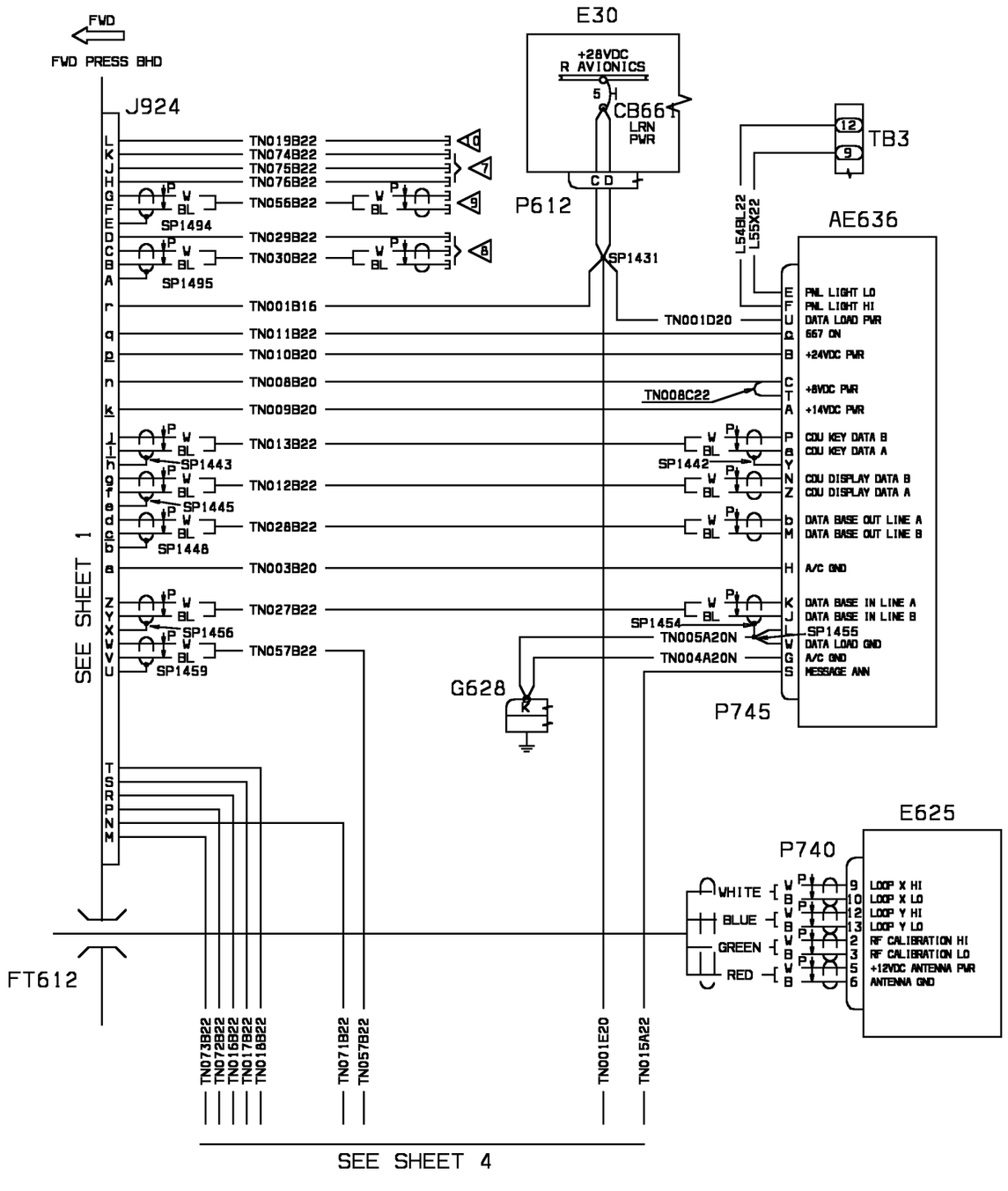


WM_345600KKA2

13 COLLINS DPU-85N P/N 622-8678-002 AND MPU-85N P/N 622-8679-002 ARE REPLACED BY DPU P/N 622-8678-014 AND MPU P/N 622-8679-014 ON S.N.1034 AND OVER AND S.B. 80-0098 AIRPLANES

12 MANDATORY MODIFICATION AS PER S.B.80-0055 FOR AIRPLANES UP TO S.N.1033 INCORPORATED BY MANUFACTORER FOR AIRPLANES POST S.N.1033

11 CAP & STOW BEHIND RADIO RACK.

10 CAPPED & STOWED NEAR THE AE664 (ANNUNCIATOR COUPLER)

9 CAPPED & STOWED NEAR THE AE602 (SEC VOR/DME CONTROL)

8 CAPPED & STOWED NEAR THE AE636 (CONTROL UNIT DISPLAY)

7 CAPPED & STOWED NEAR THE AE601 (VOR/DME CONTROL)

6 CAPPED & STOWED NEAR THE AE665 (BIAS BOX)

5 CAPPED & STOWED NEAR THE AE640 (MFD PROCESSOR UNIT)

4 CAPPED & STOWED NEAR THE AE643 (AIR DATA COMPUTER)

3 CAPPED & STOWED NEAR THE AE634 (LRN COMPUTER)

2 CAPPED & STOWED NEAR THE RACKS THE WIRE BL-TN089B22.

1 CAPED & STOWED EXISTING WIRE IN a & Z.

NOTE:

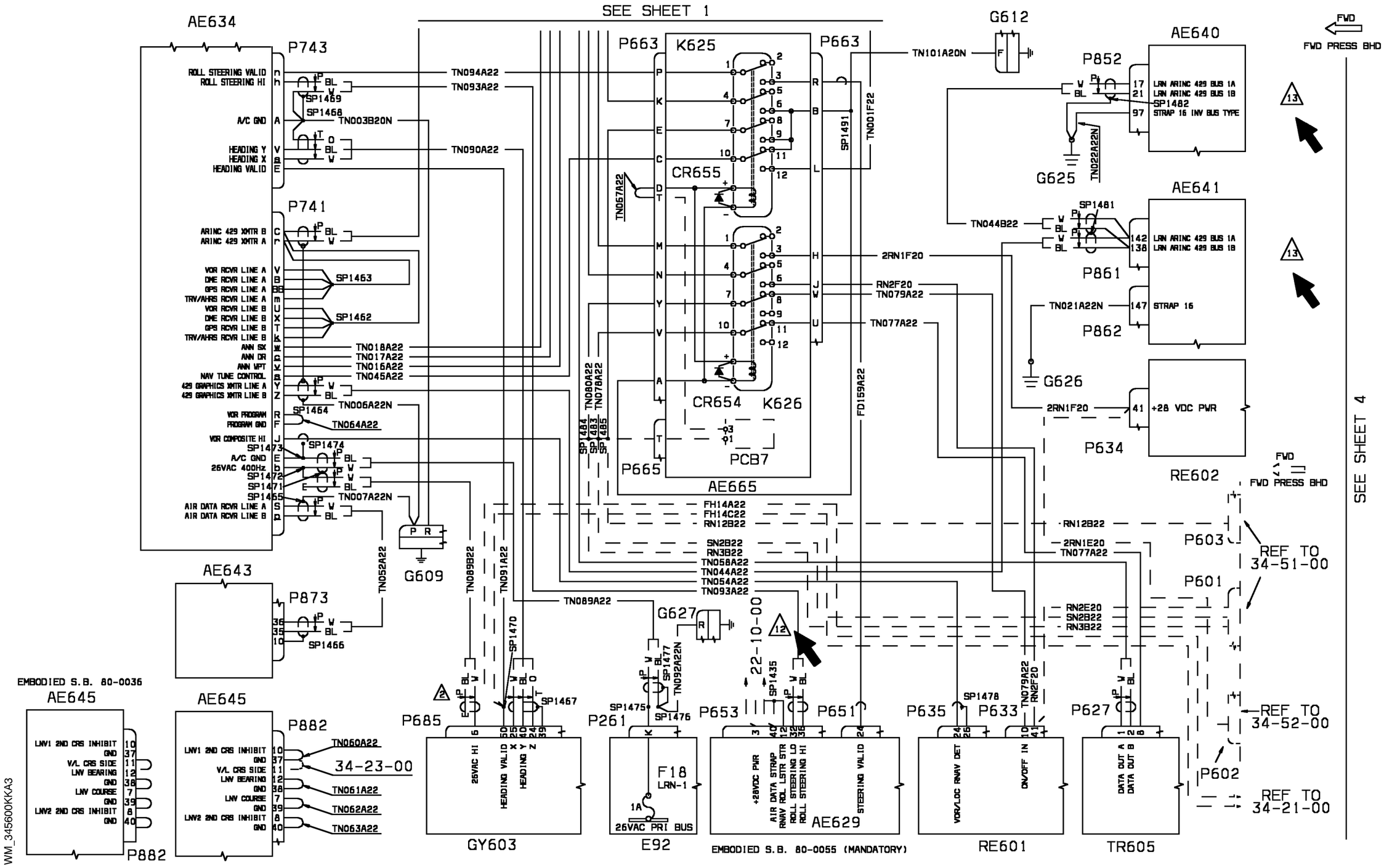


| EFFECTIVITY: | DEPENDENT POSITION DETERMINING<br>Loran Omega (Optional) |
|---|---|

**34-56-00**

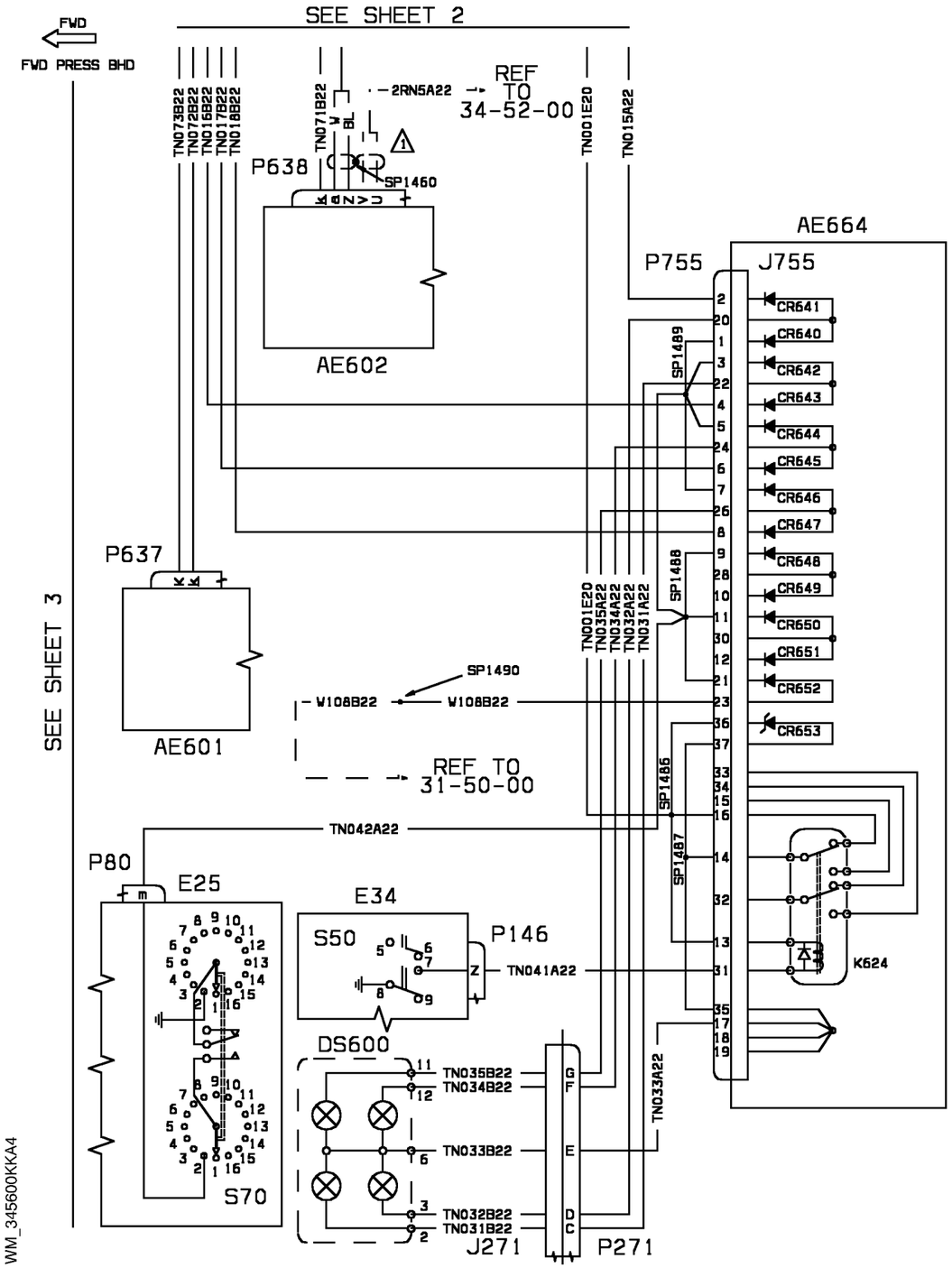


WM_345600KKA4

13 COLLINS DPU-85N P/N 622-8678-002 AND MPU-85N P/N 622-8679-002 ARE REPLACED BY DPU P/N 622-8678-014 AND MPU P/N 622-8679-014 ON S.N.1034 AND OVER AND S.B. 80-0098 AIRPLANES

12 MANDATORY MODIFICATION AS PER S.B.80-0055 FOR AIRPLANES UP TO S.N.1033 INCORPORATED BY MANUFACTORER FOR AIRPLANES POST S.N.1033

11 CAPPED & STOWED BEHIND RADIO RACK.

10 CAPPED & STOWED NEAR THE AE664 (ANNUNCIATOR COUPLER)

9 CAPPED & STOWED NEAR THE AE602 (SEC VOR/DME CONTROL)

8 CAPPED & STOWED NEAR THE AE636 (CONTROL UNIT DISPLAY)

7 CAPPED & STOWED NEAR THE AE601 (VOR/DME CONTROL)

6 CAPPED & STOWED NEAR THE AE665 (BIAS BOX)

5 CAPPED & STOWED NEAR THE AE640 (MFD PROCESSOR UNIT)

4 CAPPED & STOWED NEAR THE AE643 (AIR DATA COMPUTER)

3 CAPPED & STOWED NEAR THE AE634 (LRN COMPUTER)

2 CAPPED & STOWED NEAR THE RACKS THE WIRE BL-TN089B22.

1 CAPPED & STOWED EXISTING WIRE IN a & Z

NOTE:

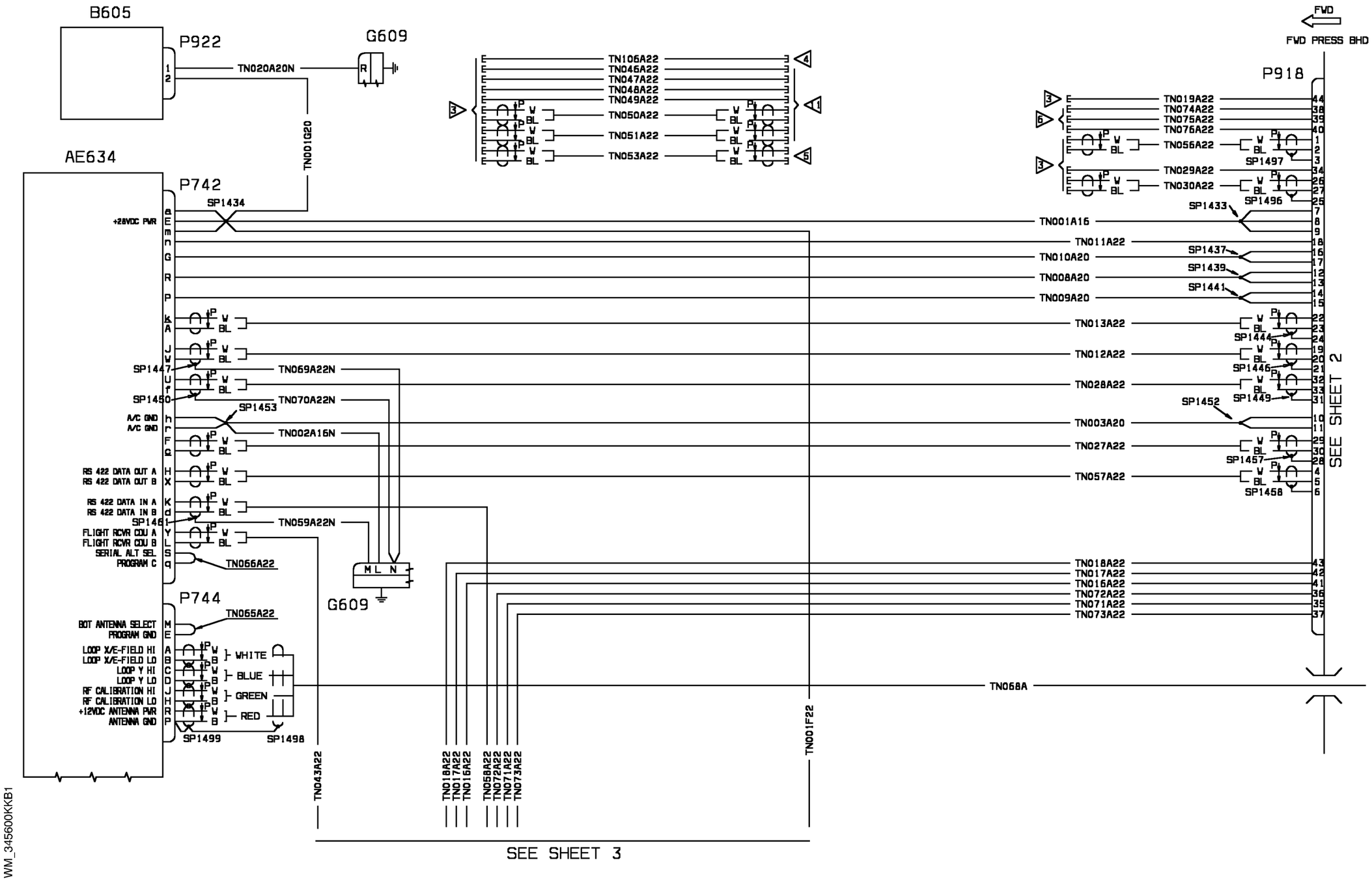


| EFFECTIVITY: | DEPENDENT POSITION DETERMINING<br>Loran Omega (Optional) |
|---|---|

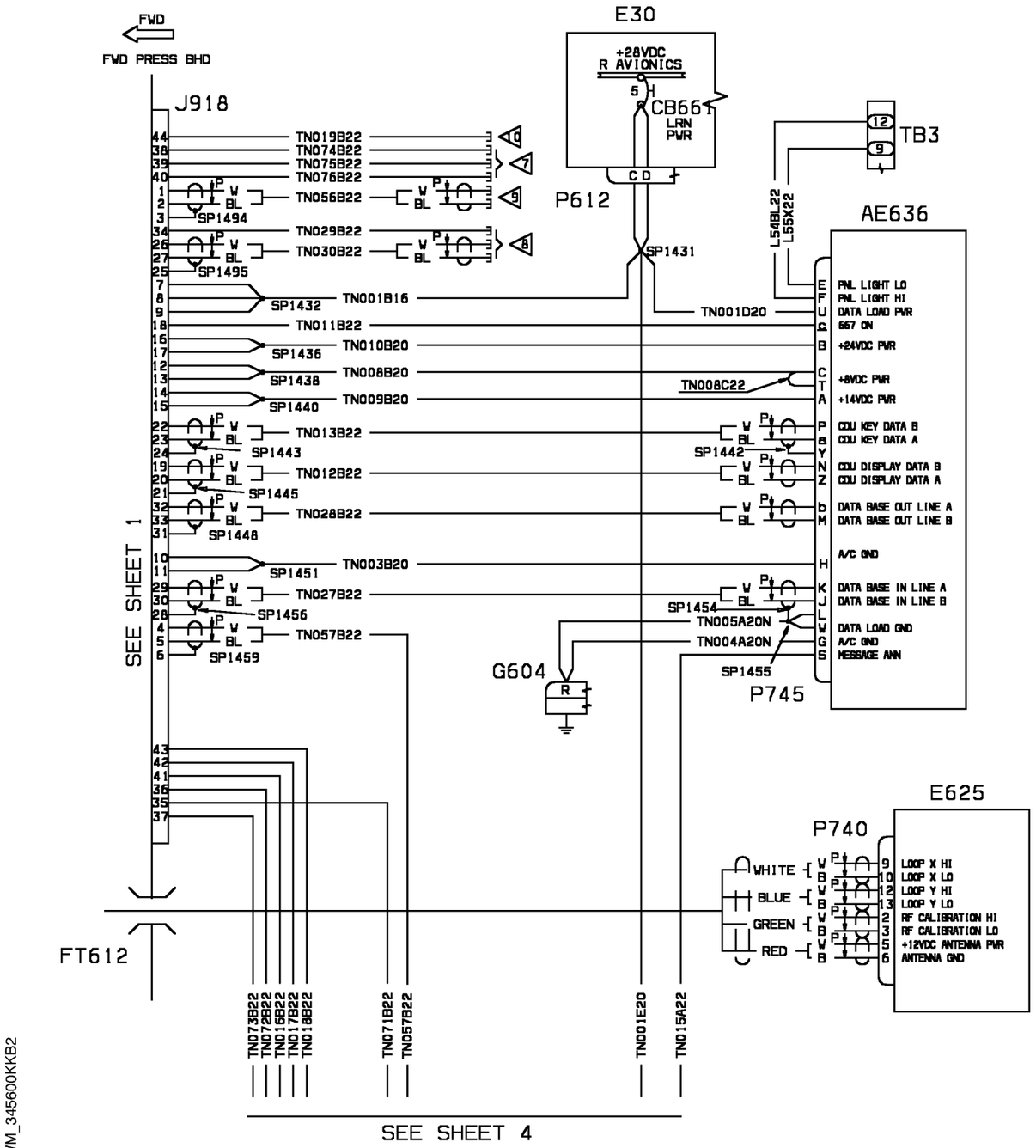


WM_345600KKB2

12 MANDATORY MODIFICATION AS PER S.B. 80 FOR AIRPLANES UP TO S.N. 1033 INCORPORATED BY MANUFACTORER FOR AIR POST S.N. 1033 -0055 PLANES

11 CAP & STOW BEHIND RADIO RACK.

10 CAPPED & STOWED NEAR THE AE664 (ANNUNCIATOR COUPLER)

9 CAPPED & STOWED NEAR THE AE602 (SEC VOR/DME CONTROL)

8 CAPPED & STOWED NEAR THE AE636 (CONTROL UNIT DISPLAY)

7 CAPPED & STOWED NEAR THE AE601 (VOR/DME CONTROL)

6 CAPPED & STOWED NEAR THE AE665 (BIAS BOX)

5 CAPPED & STOWED NEAR THE AE640 (MFD PROCESSOR UNIT)

4 CAPPED & STOWED NEAR THE AE643 (AIR DATA COMPUTER)

3 CAPPED & STOWED NEAR THE AE634 (LRN COMPUTER)

2 CAPPED & STOWED NEAR THE RACKS THE WIRE BL-TN089B22.

1 CAPED & STOWED EXISTING WIRE IN a & Z.

NOTE:

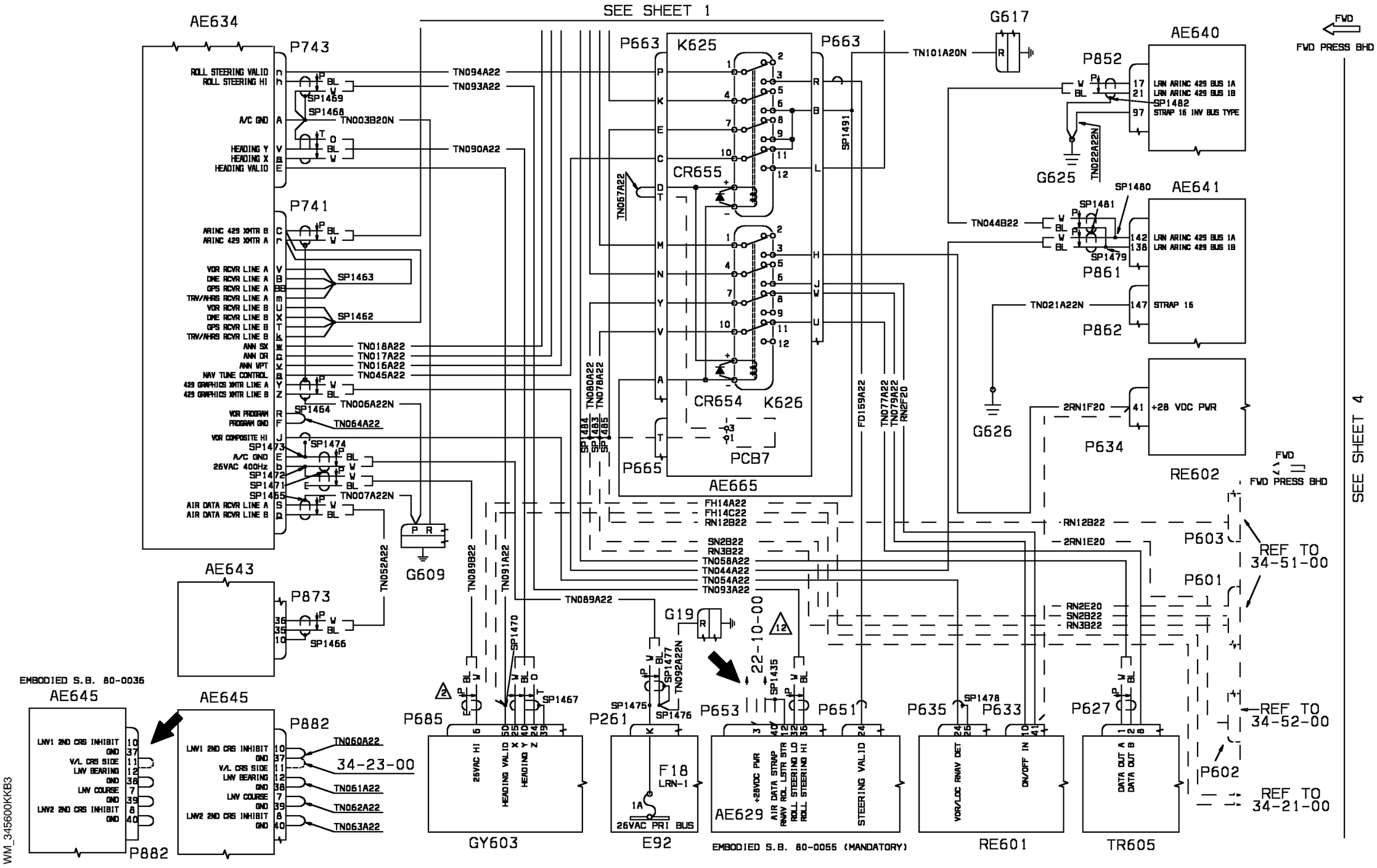


| EFFECTIVITY: | DEPENDENT POSITION DETERMINING<br>Loran Omega (Optional) |
|---|---|

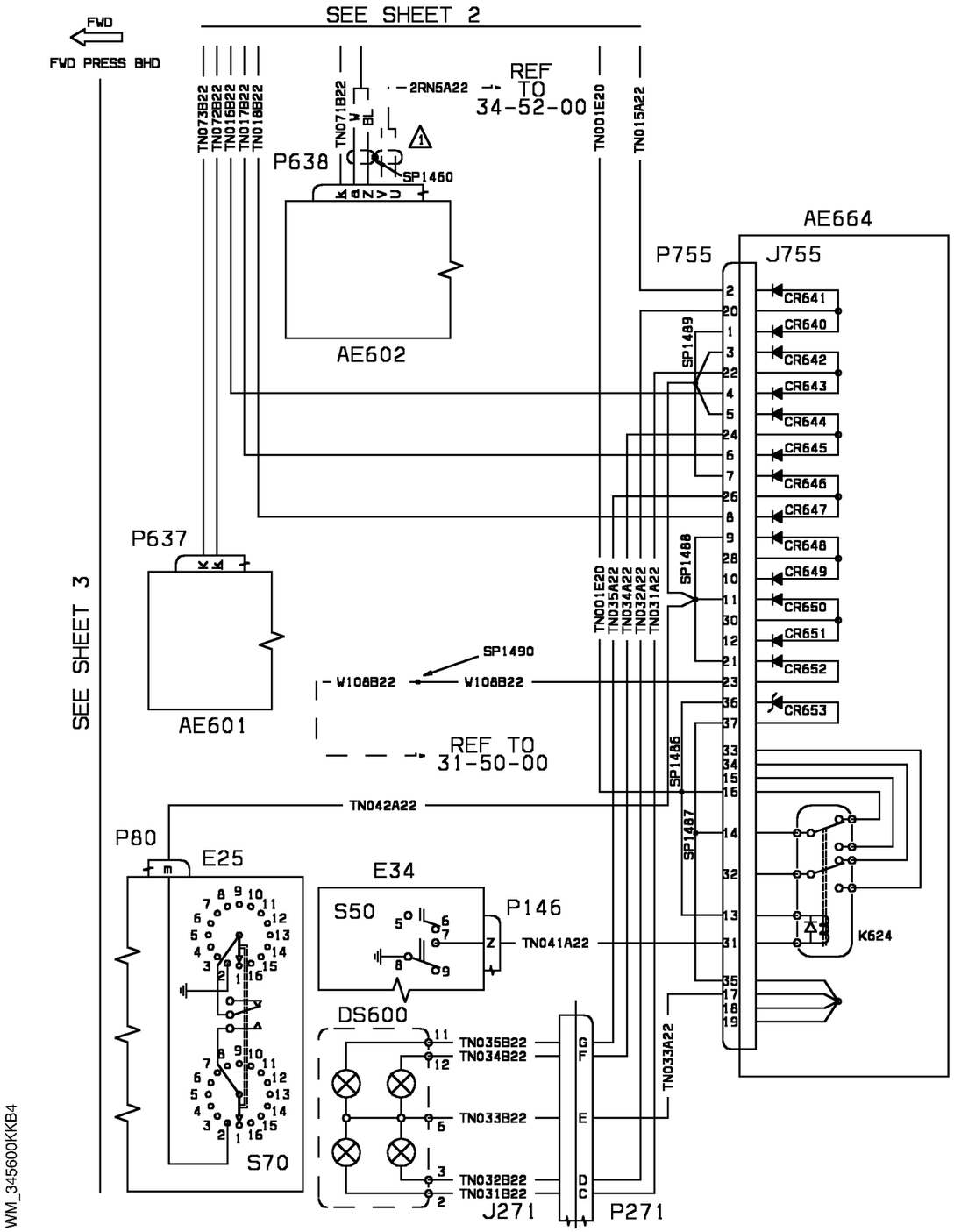


12 MANDATORY MODIFICATION AS PER S.B.80-0055 FOR AIRPLANES UP TO S.N.1033 INCORPORATED BY MANUFACTORER FOR AIRPLANES POST S.N.1033

11 CAPPED & STOWED BEHIND RADIO RACK.

10 CAPPED & STOWED NEAR THE AE664 (ANNUNCIATOR COUPLER)

9 CAPPED & STOWED NEAR THE AE602 (SEC VOR/DME CONTROL)

8 CAPPED & STOWED NEAR THE AE636 (CONTROL UNIT DISPLAY)

7 CAPPED & STOWED NEAR THE AE601 (VOR/DME CONTROL)

6 CAPPED & STOWED NEAR THE AE665 (BIAS BOX)

5 CAPPED & STOWED NEAR THE AE640 (MFD PROCESSOR UNIT)

4 CAPPED & STOWED NEAR THE AE643 (AIR DATA COMPUTER)

3 CAPPED & STOWED NEAR THE AE634 (LRN COMPUTER)

2 CAPPED & STOWED NEAR THE RACKS THE WIRE BL-TN089B22.

1 CAPPED & STOWED EXISTING WIRE IN a & Z

NOTE:

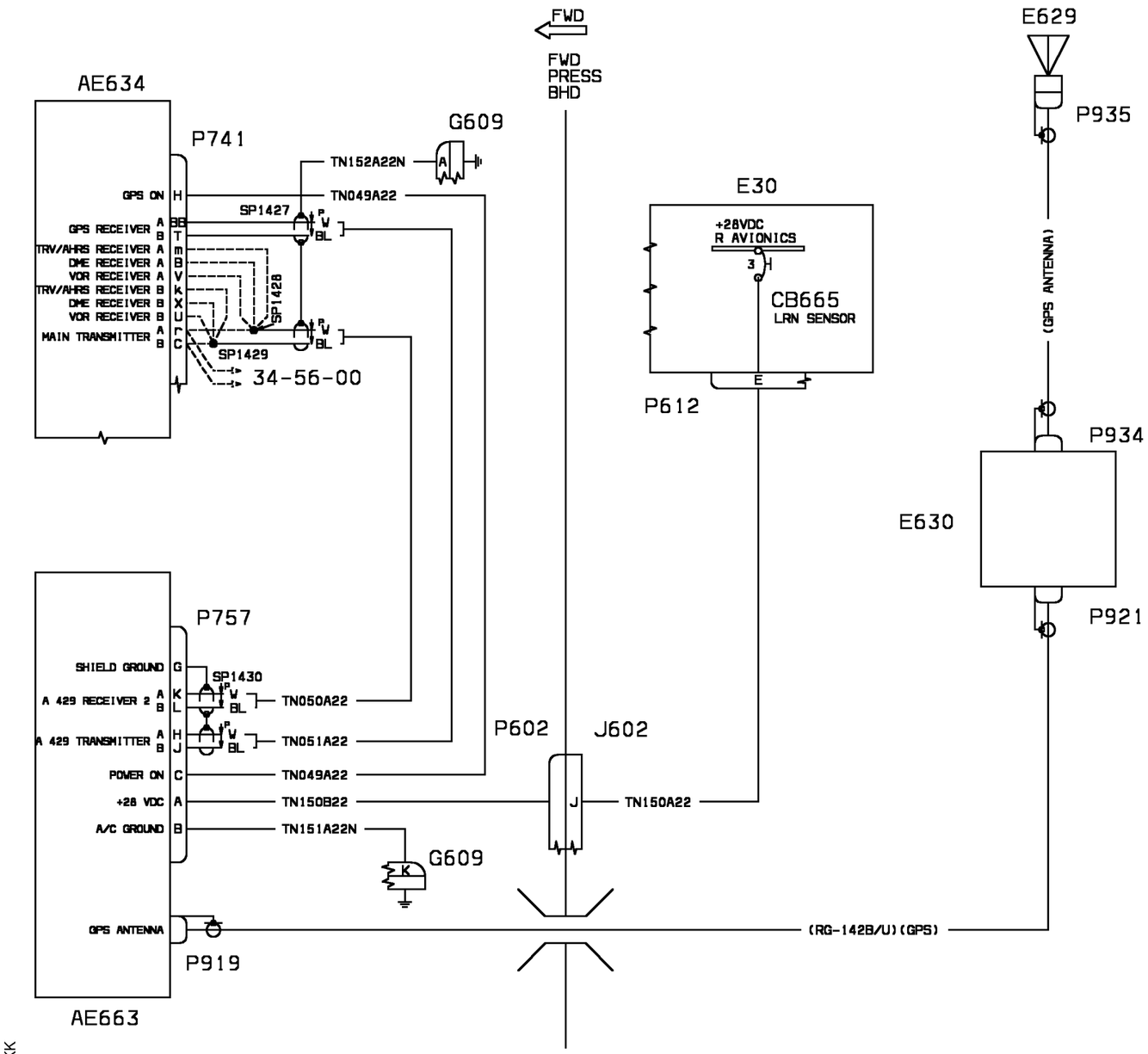


WM_345610KK

| EFFECTIVITY: | DEPENDENT POSITION DETERMINING<br>GPS (P/Y CODE) Optional |
|---|---|

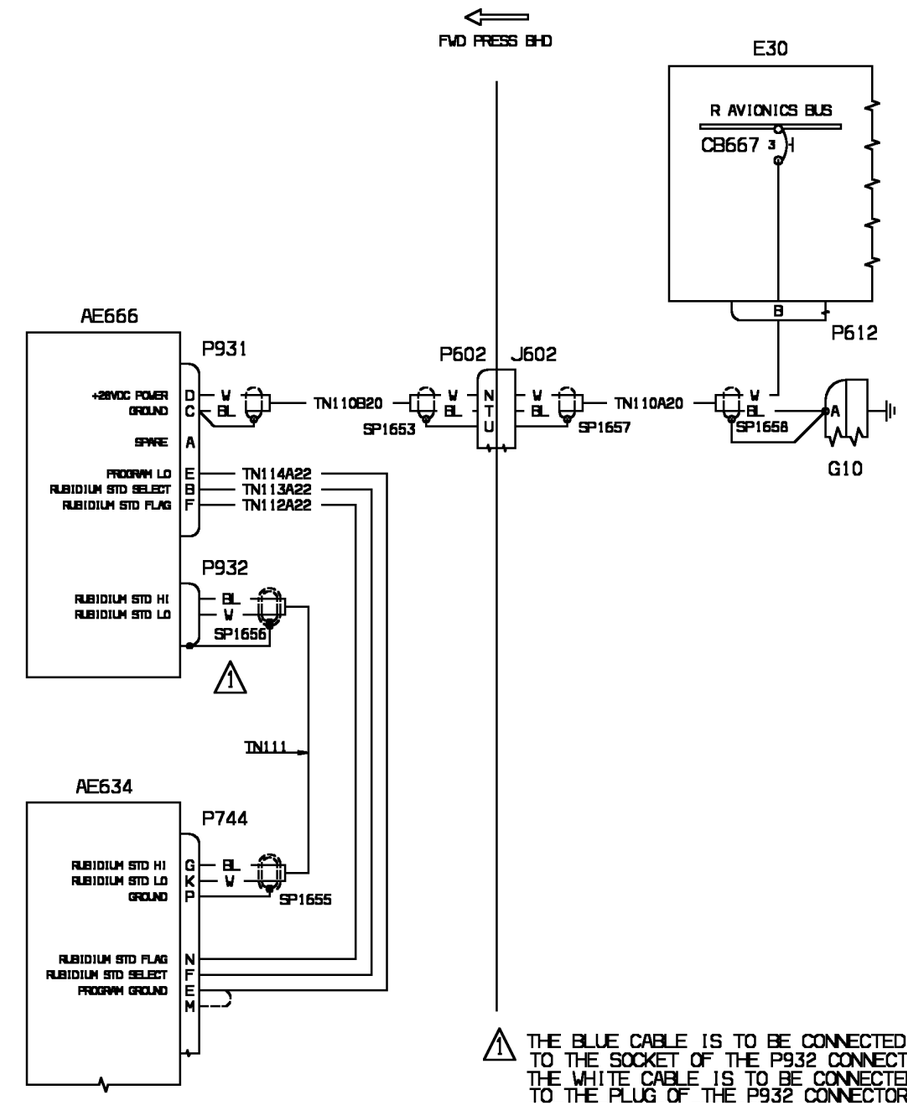
FWD PRESS BHD
E30
R AVIONICS BUS
CB667
3
H
B
P612
AE666
P931
P602
J602
+28VDC POWER
GROUND
SPARE
PROGRAM LO
RUBIDIUM STD SELECT
RUBIDIUM STD FLAG
D
C
A
E
B
F
W
BL
TN110B20
SP1653
N
T
U
TN110A20
SP1657
SP1658
A
G10
TN114A22
TN113A22
TN112A22
P932
RUBIDIUM STD HI
RUBIDIUM STD LO
SP1656
1
TN111
AE634
P744
RUBIDIUM STD HI
RUBIDIUM STD LO
GROUND
G
K
P
SP1655
RUBIDIUM STD FLAG
RUBIDIUM STD SELECT
PROGRAM GROUND
N
F
E
M
1 THE BLUE CABLE IS TO BE CONNECTED
TO THE SOCKET OF THE P932 CONNECTOR
THE WHITE CABLE IS TO BE CONNECTED
TO THE PLUG OF THE P932 CONNECTOR
THE TWO MINOR SECTION CABLES ARE NOT USED

WM_345620KK

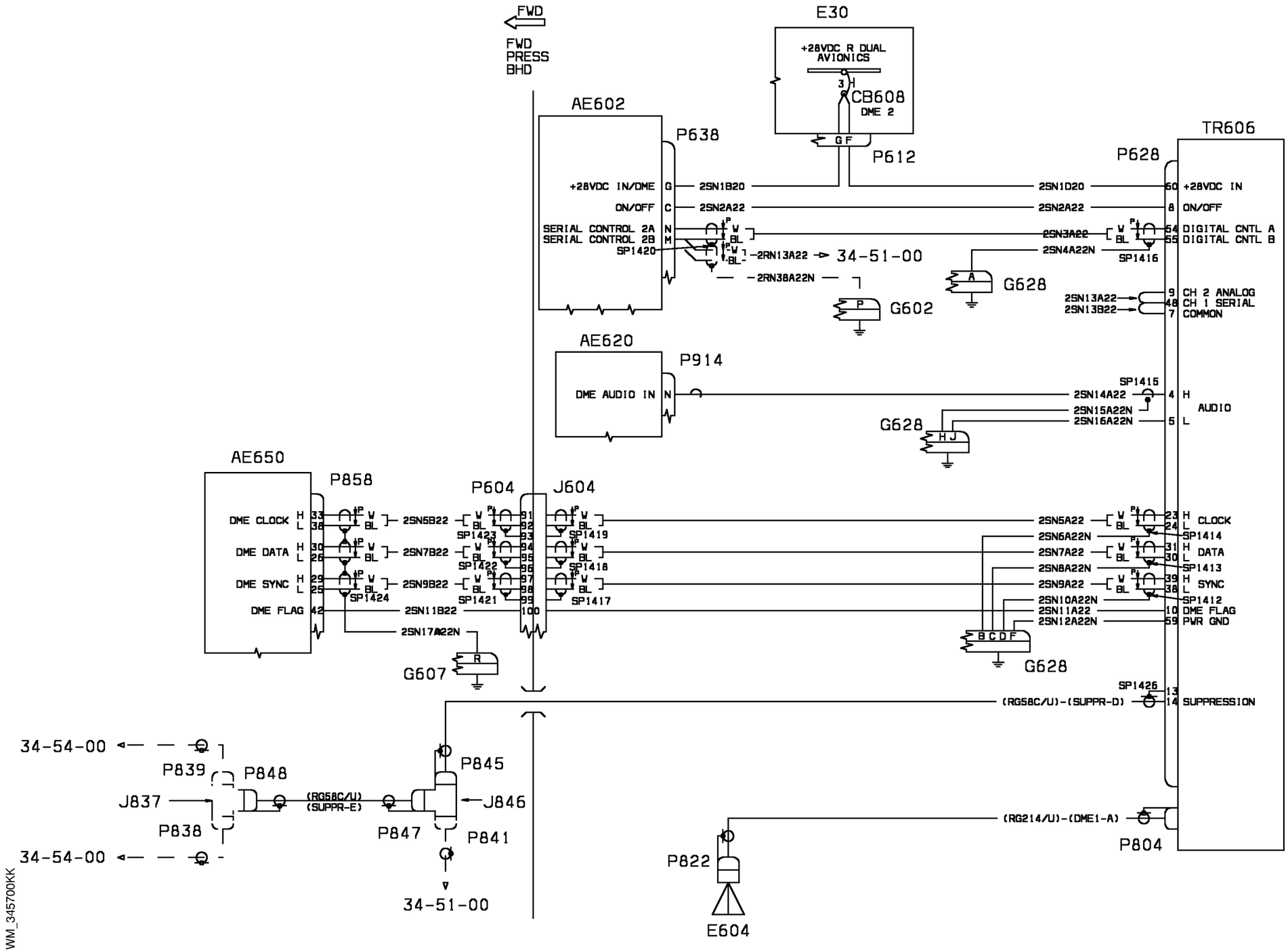


| EFFECTIVITY: | DEPENDENT POSITION DETERMINING<br>Secondary DME (Optional) |
|---|---|

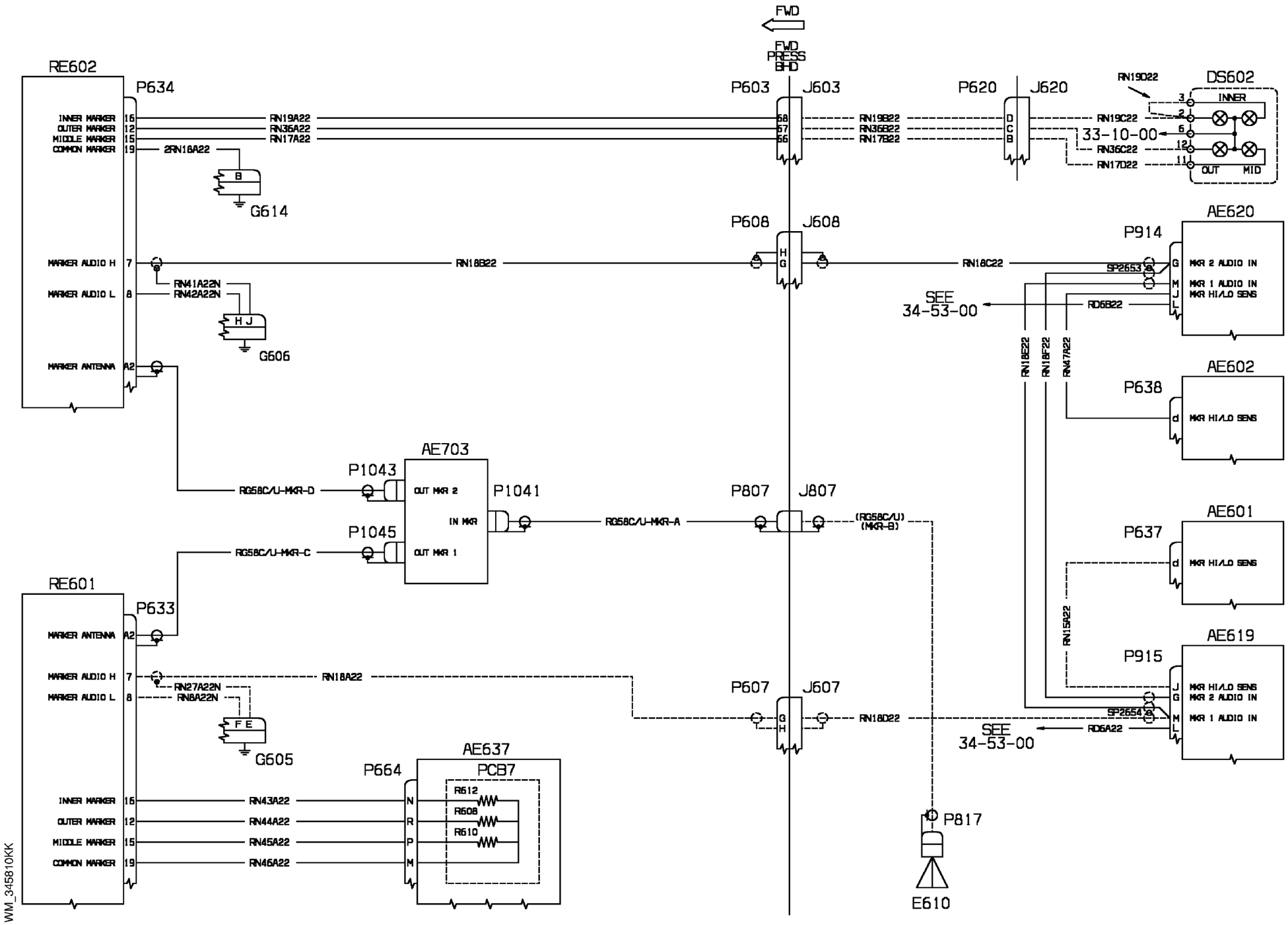


| EFFECTIVITY: | DEPENDENT POSITION DETERMINING<br>Dual Marker (Optional) |
|---|---|

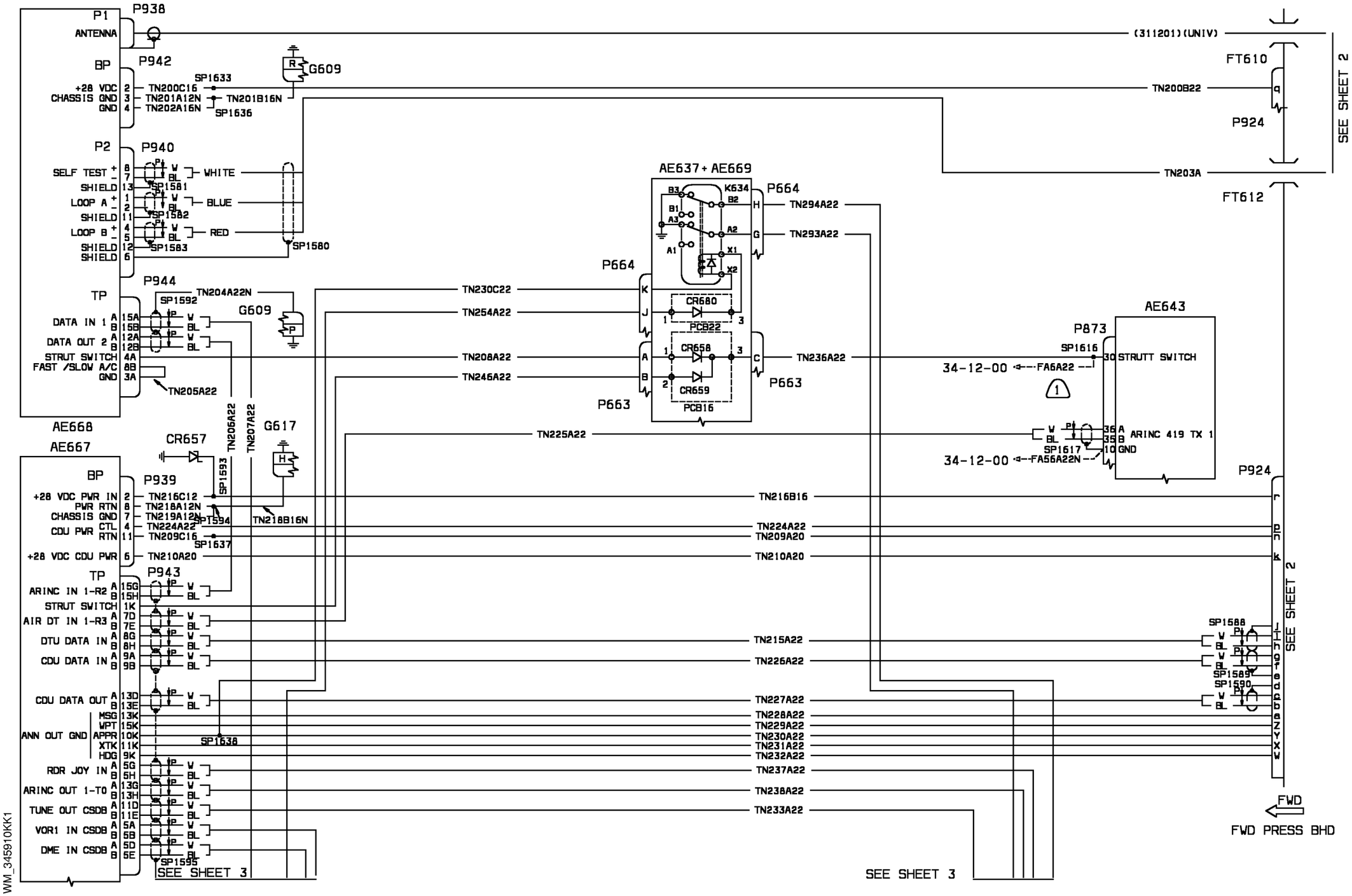


| EFFECTIVITY: | DEPENDENT POSITION DETERMINING<br>FMS/UNS 1A (Optional) |
|---|---|

**34-59-10**

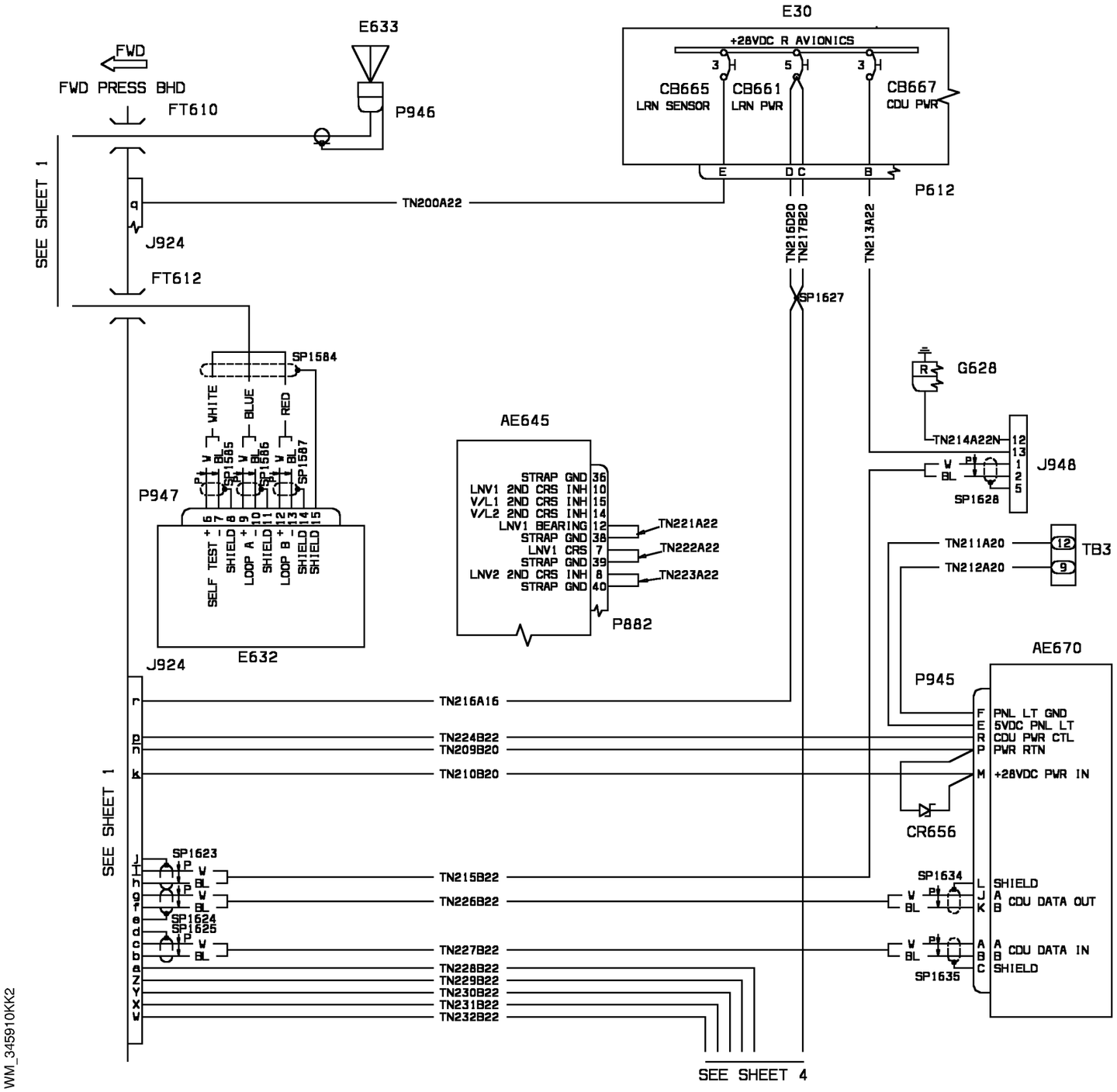


WM_345910KK2

| EFFECTIVITY: | DEPENDENT POSITION DETERMINING<br>FMS/UNS 1A (Optional) |
|---|---|

**34-59-10**

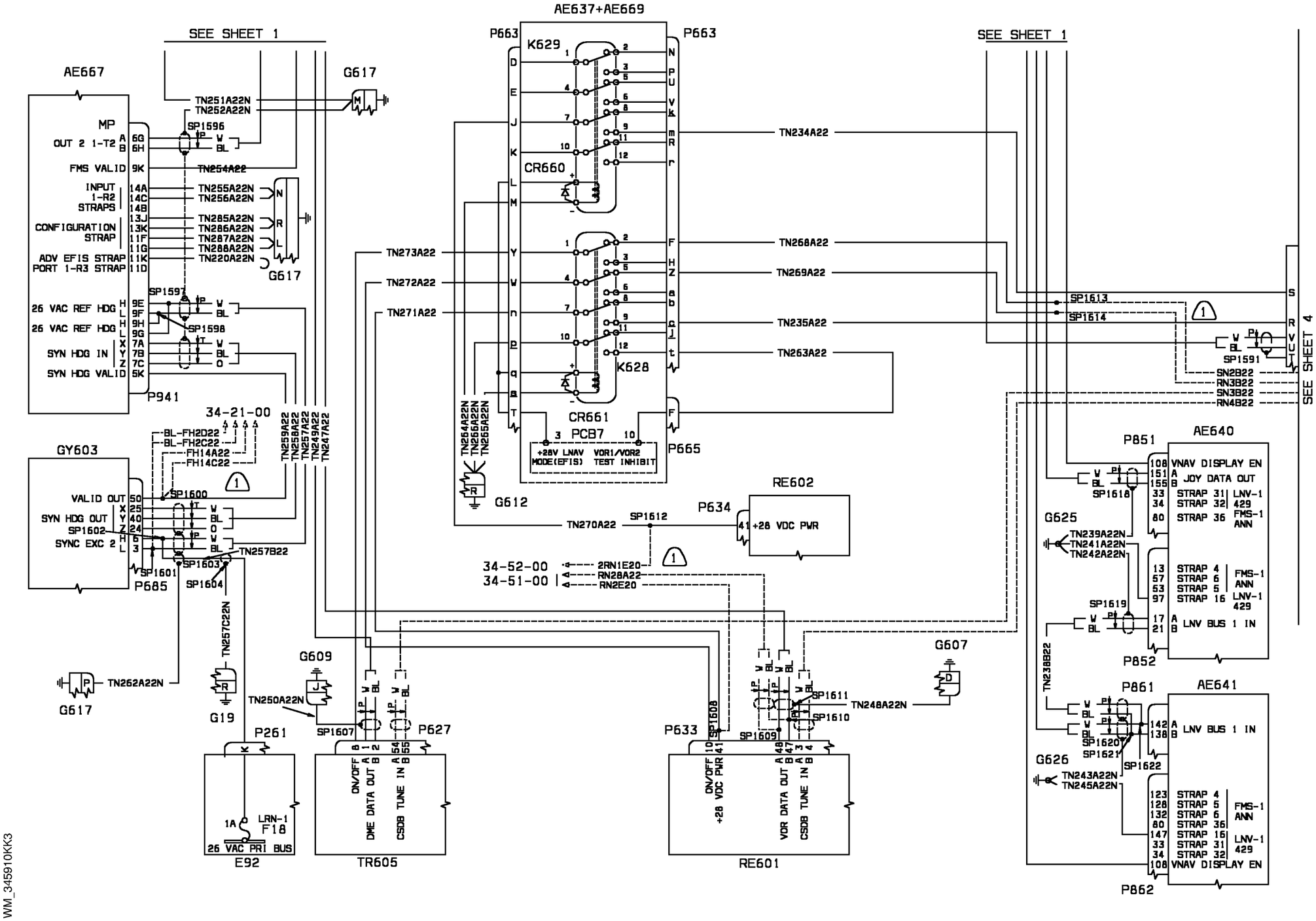


WM_345910KK3

| EFFECTIVITY: | DEPENDENT POSITION DETERMINING<br>FMS/UNS 1A (Optional) |
|---|---|

**34-59-10**

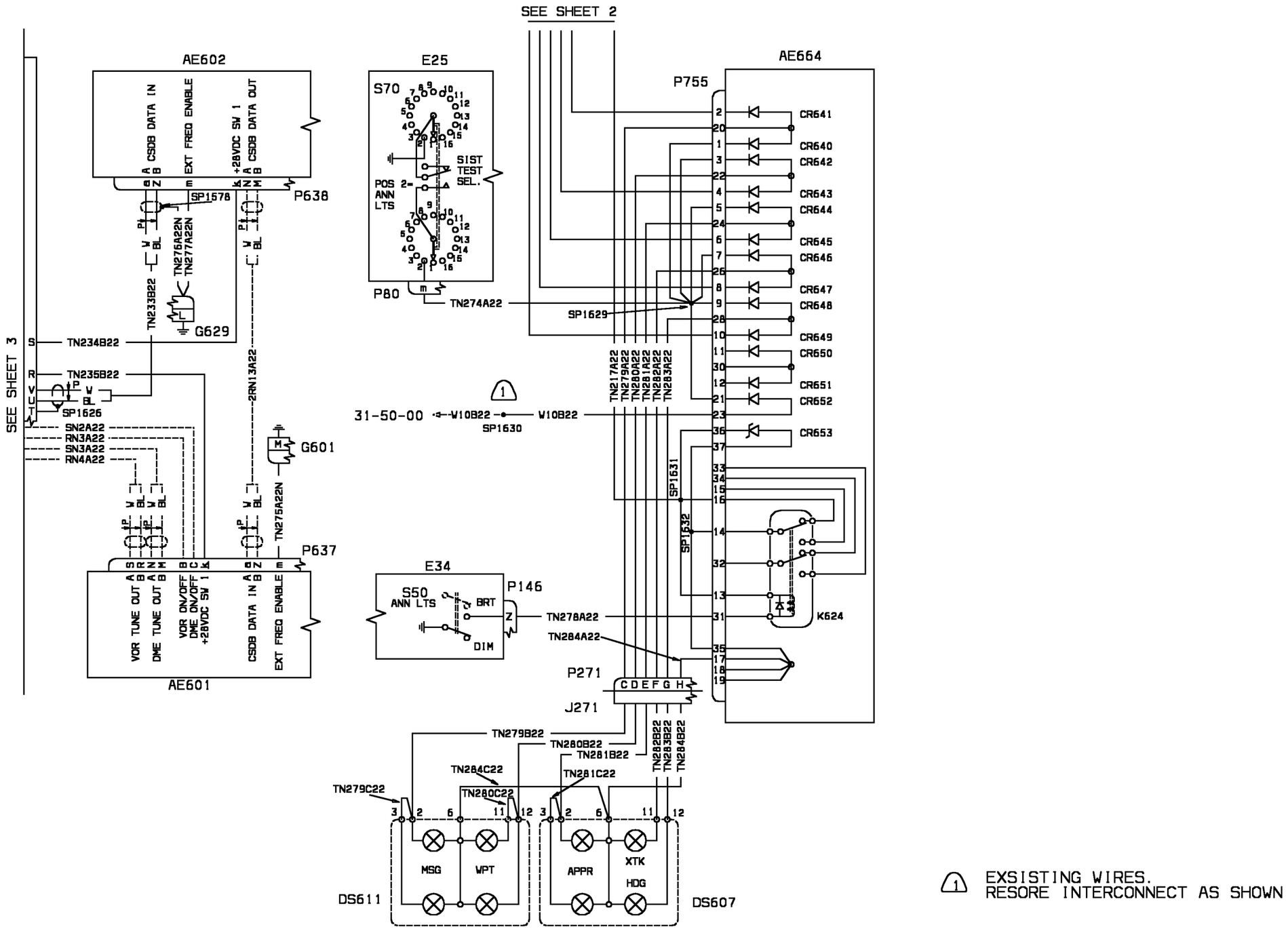


WM_345910KK4

1 EXSISTING WIRES.
RESORE INTERCONNECT AS SHOWN

| EFFECTIVITY: | DEPENDENT POSITION DETERMINING<br>FMS/UNS 1A (Optional) |
|---|---|

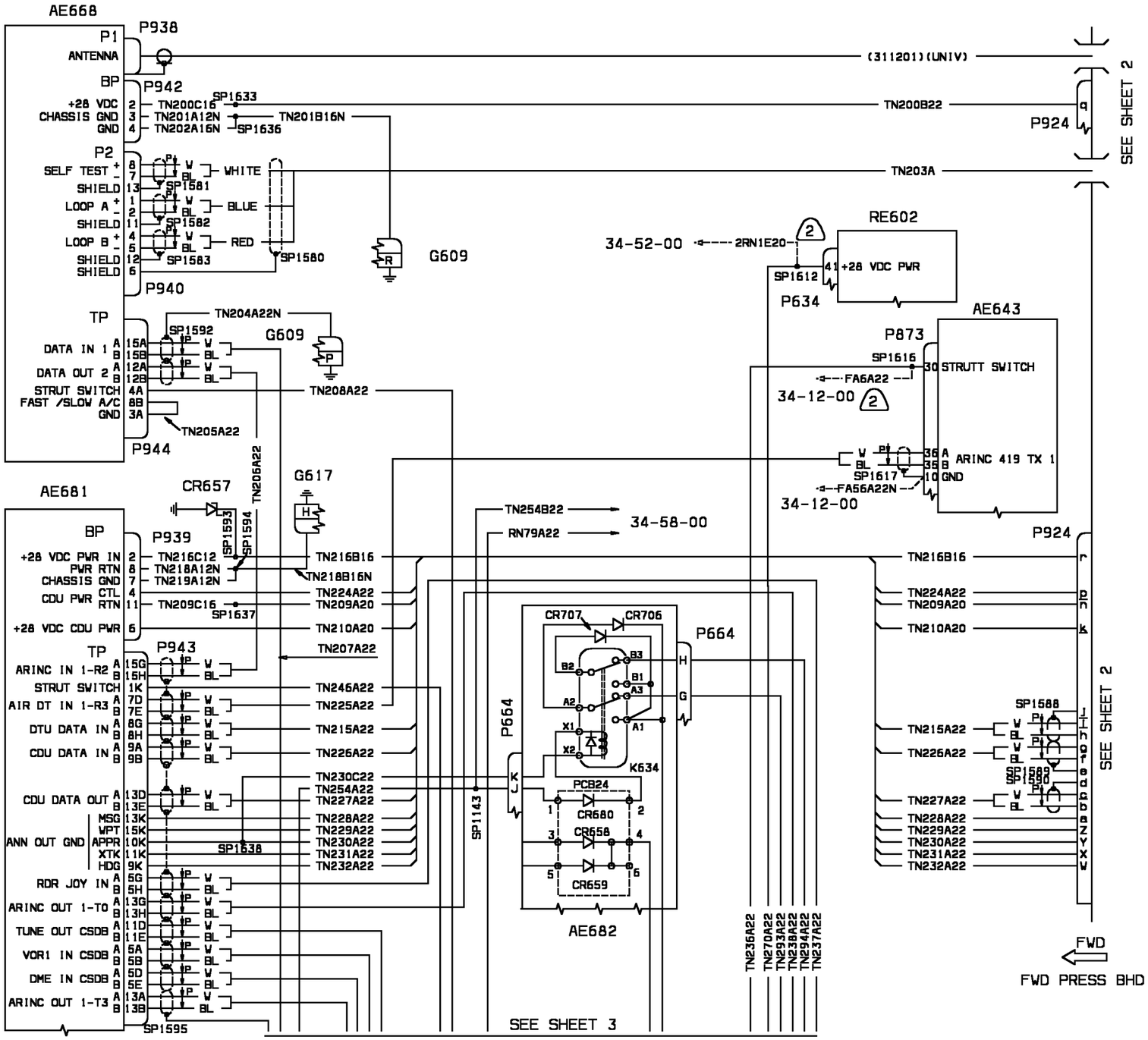


2 EXISTING WIRES. RESTORE INTERCONNECT AS SHOWN

WM_345920JJ1

| EFFECTIVITY: | DEPENDENT POSITION DETERMINING<br>FMS/UNS 1A MMMS (Optional) |
|---|---|

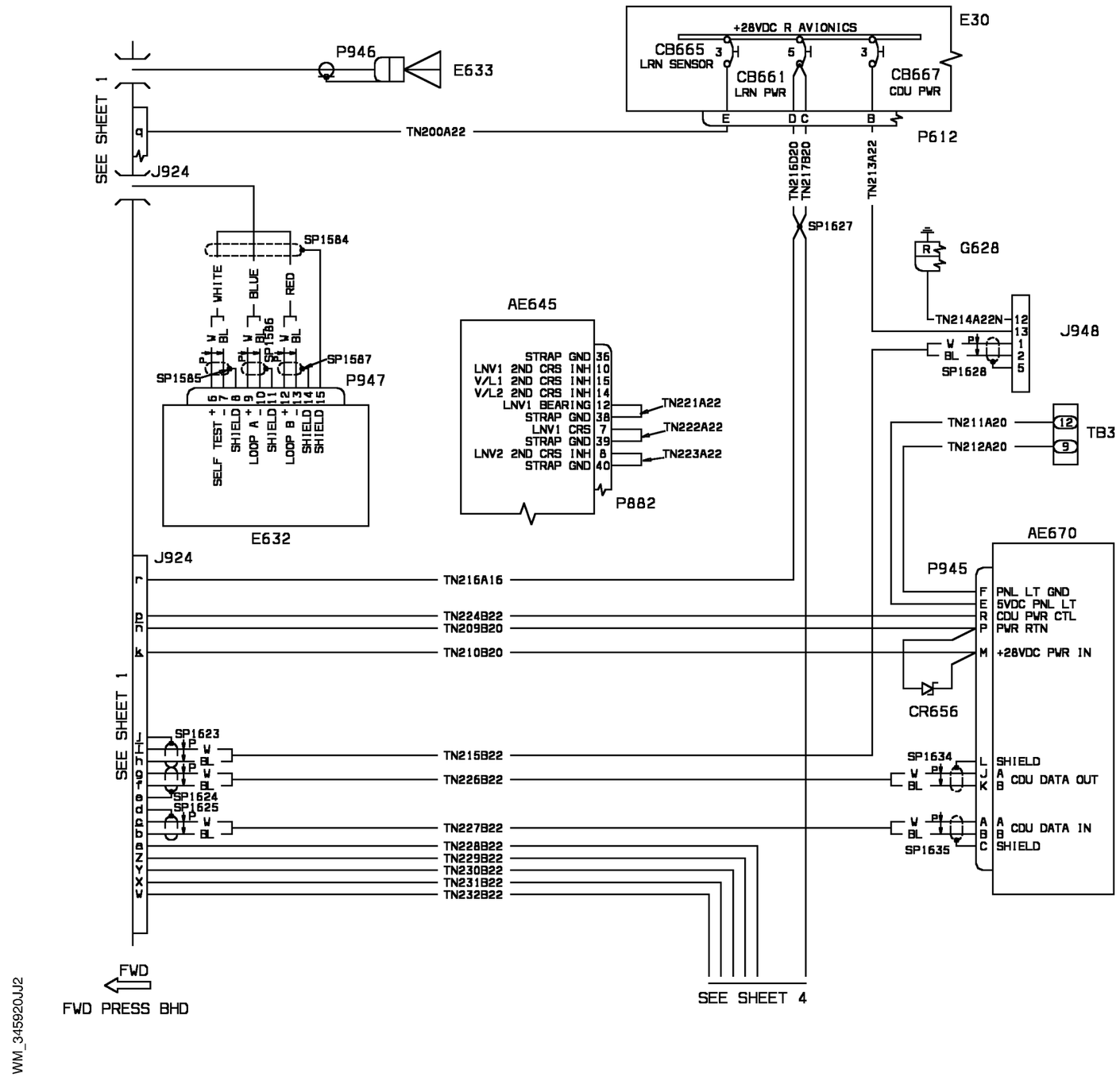
+28VDC R AVIONICS
E30
CB665
LRN SENSOR
CB661
LRN PWR
CB667
CDU PWR
P612
P946
E633
SEE SHEET 1
J924
TN200A22
TN216D20
TN217B20
TN213A22
SP1627
SP1584
WHITE
BLUE
RED
SP1585
SP1586
SP1587
P947
SELF TEST +
SELF TEST -
SHIELD
LOOP A +
LOOP A -
SHIELD
LOOP B +
LOOP B -
SHIELD
SHIELD
E632
AE645
STRAP GND 36
LNV1 2ND CRS INH 10
V/L1 2ND CRS INH 15
V/L2 2ND CRS INH 14
LNV1 BEARING 12
STRAP GND 38
LNV1 CRS 7
STRAP GND 39
LNV2 2ND CRS INH 8
STRAP GND 40
TN221A22
TN222A22
TN223A22
P882
G628
TN214A22N
J948
SP1628
TN211A20
TN212A20
TB3
AE670
P945
F PNL LT GND
E 5VDC PNL LT
R CDU PWR CTL
P PWR RTN
M +28VDC PWR IN
CR656
TN216A16
TN224B22
TN209B20
TN210B20
SP1623
SP1624
SP1625
TN215B22
TN226B22
TN227B22
TN228B22
TN229B22
TN230B22
TN231B22
TN232B22
SP1634
SP1635
L SHIELD
J A CDU DATA OUT
K B
A A
B B CDU DATA IN
C SHIELD
SEE SHEET 1
FWD
FWD PRESS BHD
SEE SHEET 4
WM_345920JJ2

(2) EXISTING WIRES. RESTORE INTERCONNECT AS SHOWN

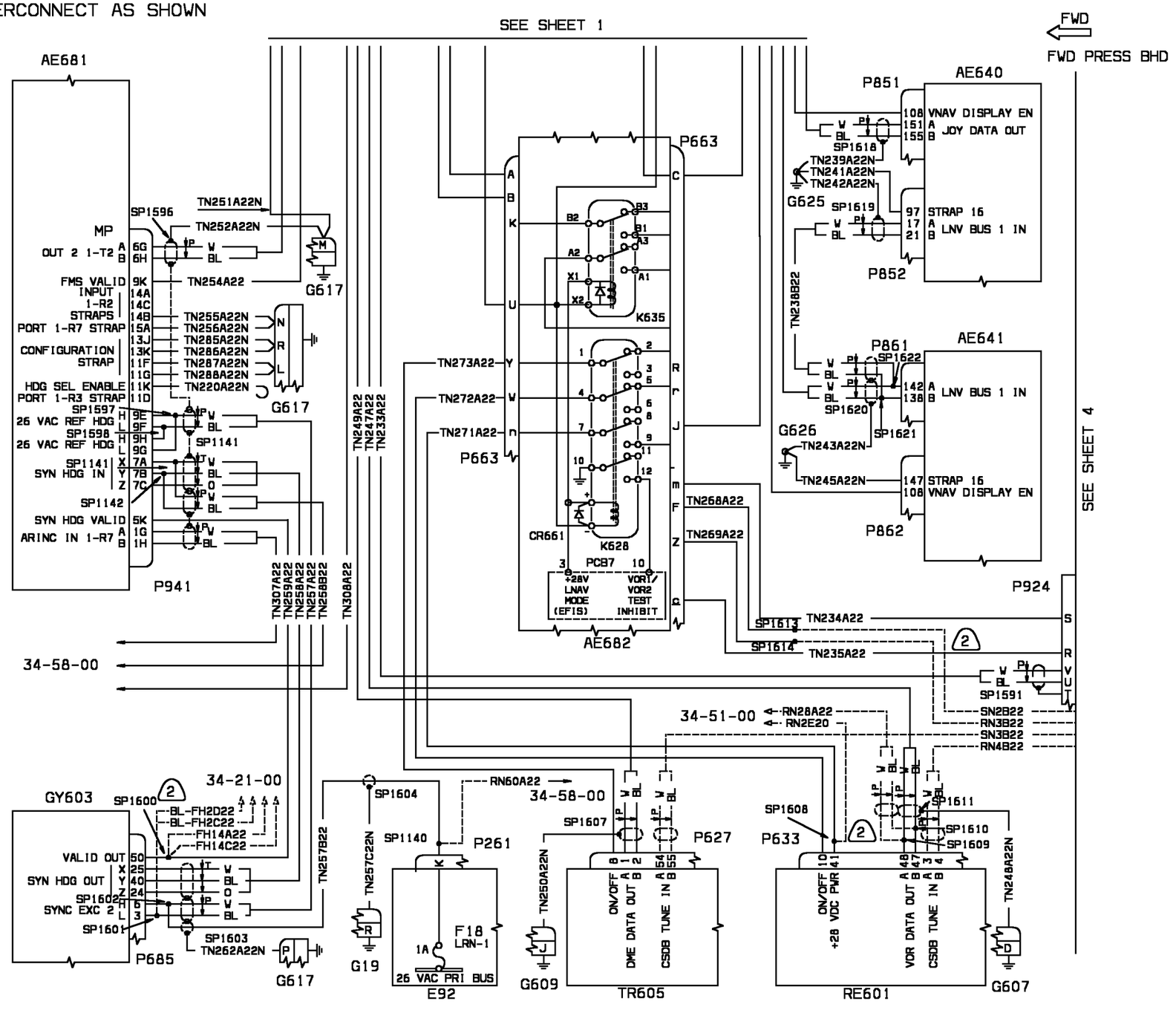


WM_345920JJ3

| EFFECTIVITY: | DEPENDENT POSITION DETERMINING<br>FMS/UNS 1A MMMS (Optional) |
|---|---|

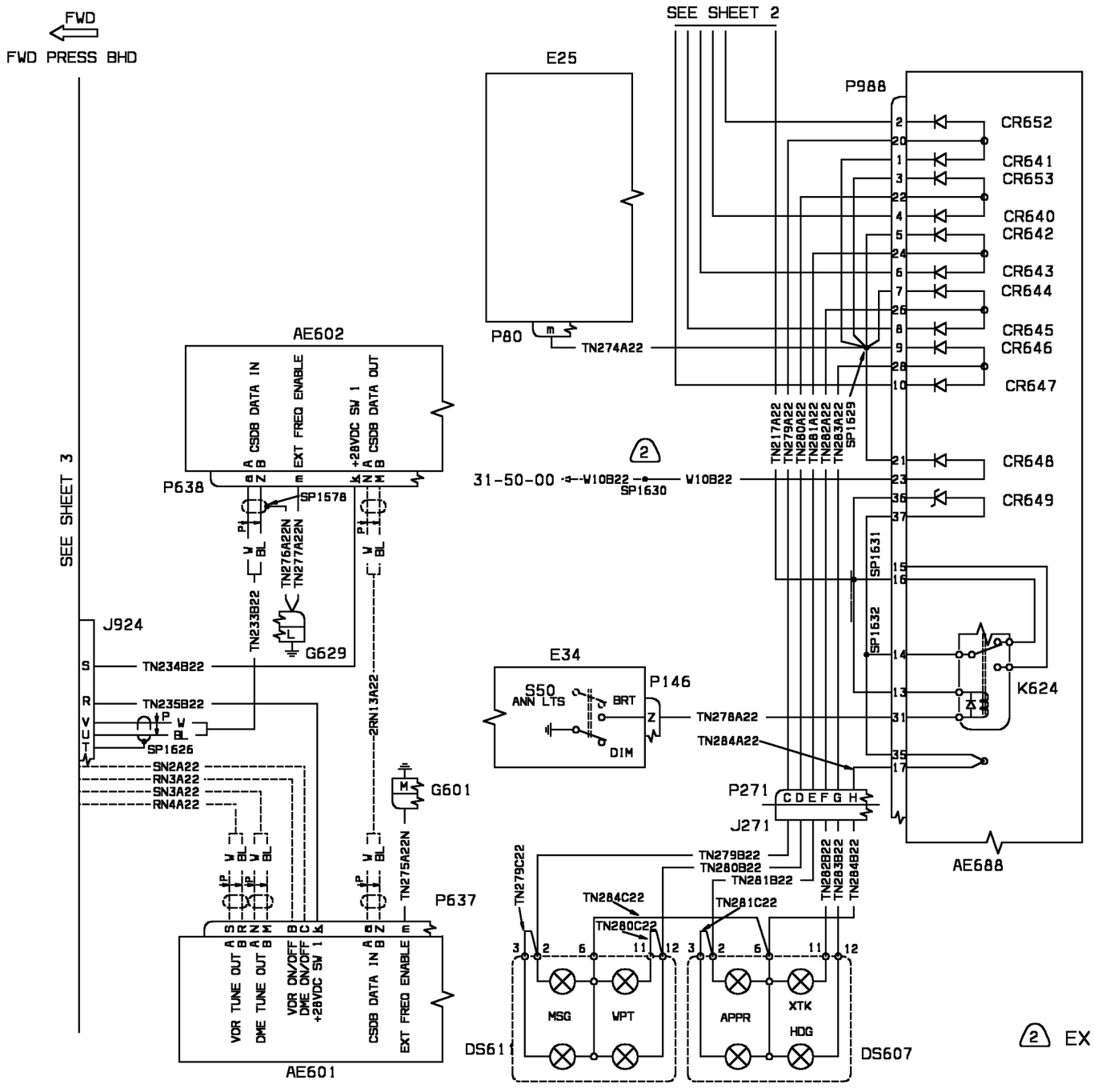


WM_345920JJ4

2 EXISTING WIRES. RESTORE INTERCONNECT AS SHOWN

| EFFECTIVITY: | DEPENDENT POSITION DETERMINING<br>FMS/UNS 1A MMMS (Optional) |
|---|---|

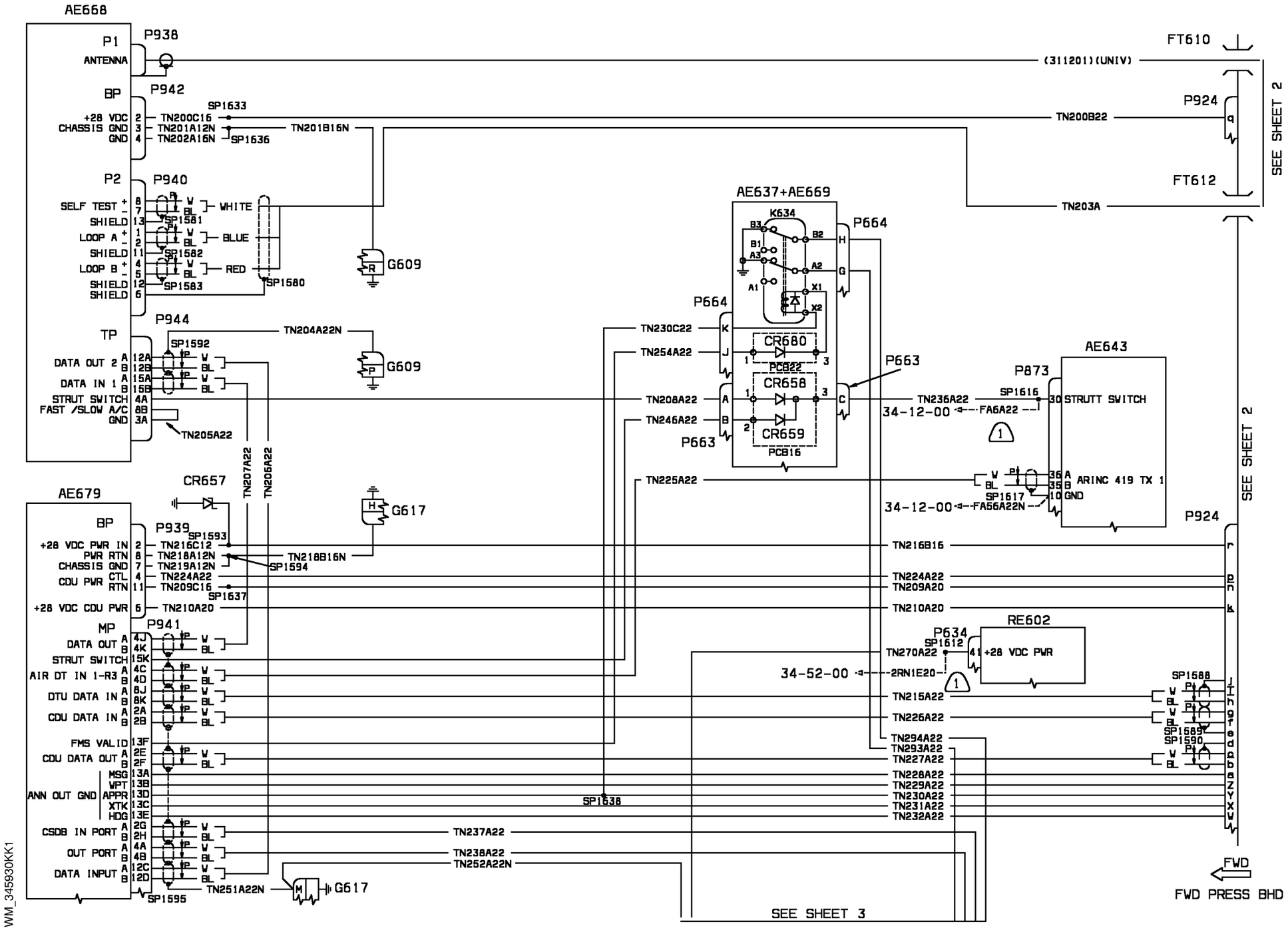


| EFFECTIVITY: | DEPENDENT POSITION DETERMINING<br>FMS/UNS 1B (Optional) |
|---|---|

**34-59-30**

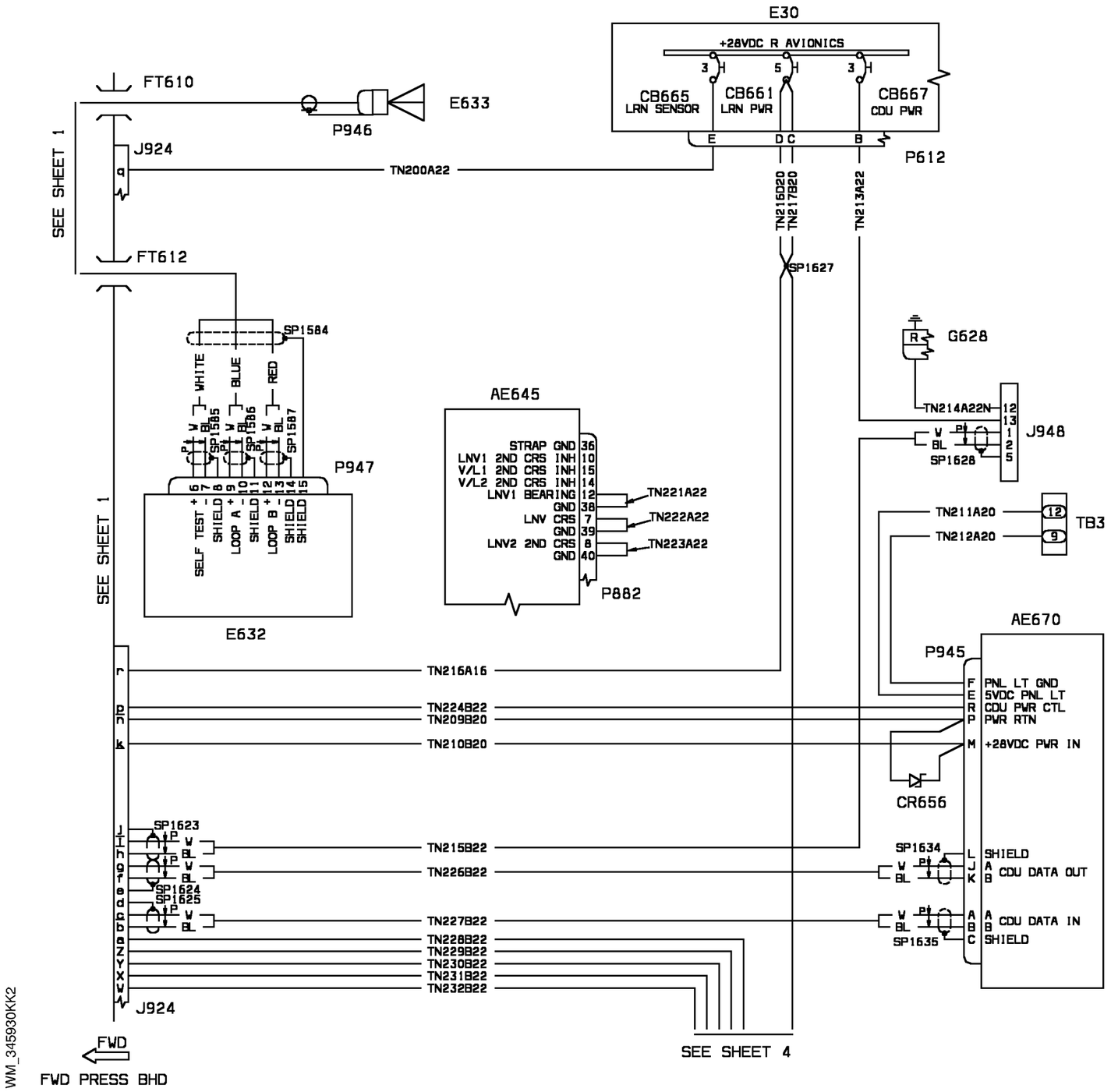
E30
+28VDC R AVIONICS
CB665 LRN SENSOR
CB661 LRN PWR
CB667 CDU PWR
P612
FT610
E633
P946
J924
TN200A22
SEE SHEET 1
FT612
TN216D20
TN217B20
TN213A22
SP1627
SP1584
WHITE
BLUE
RED
P947
SELF TEST +
SELF TEST -
LOOP A +
LOOP A -
LOOP B +
LOOP B -
SHIELD
E632
AE645
STRAP GND
LNV1 2ND CRS INH
V/L1 2ND CRS INH
V/L2 2ND CRS INH
LNV1 BEARING
LNV CRS
LNV2 2ND CRS
TN221A22
TN222A22
TN223A22
P882
G628
TN214A22N
J948
SP1628
TN211A20
TN212A20
TB3
AE670
P945
PNL LT GND
5VDC PNL LT
CDU PWR CTL
PWR RTN
+28VDC PWR IN
CR656
TN216A16
TN224B22
TN209B20
TN210B20
SP1623
SP1624
SP1625
TN215B22
TN226B22
TN227B22
TN228B22
TN229B22
TN230B22
TN231B22
TN232B22
SP1634
SP1635
SHIELD
CDU DATA OUT
CDU DATA IN
J924
SEE SHEET 4
FWD
FWD PRESS BHD
WM_345930KK2

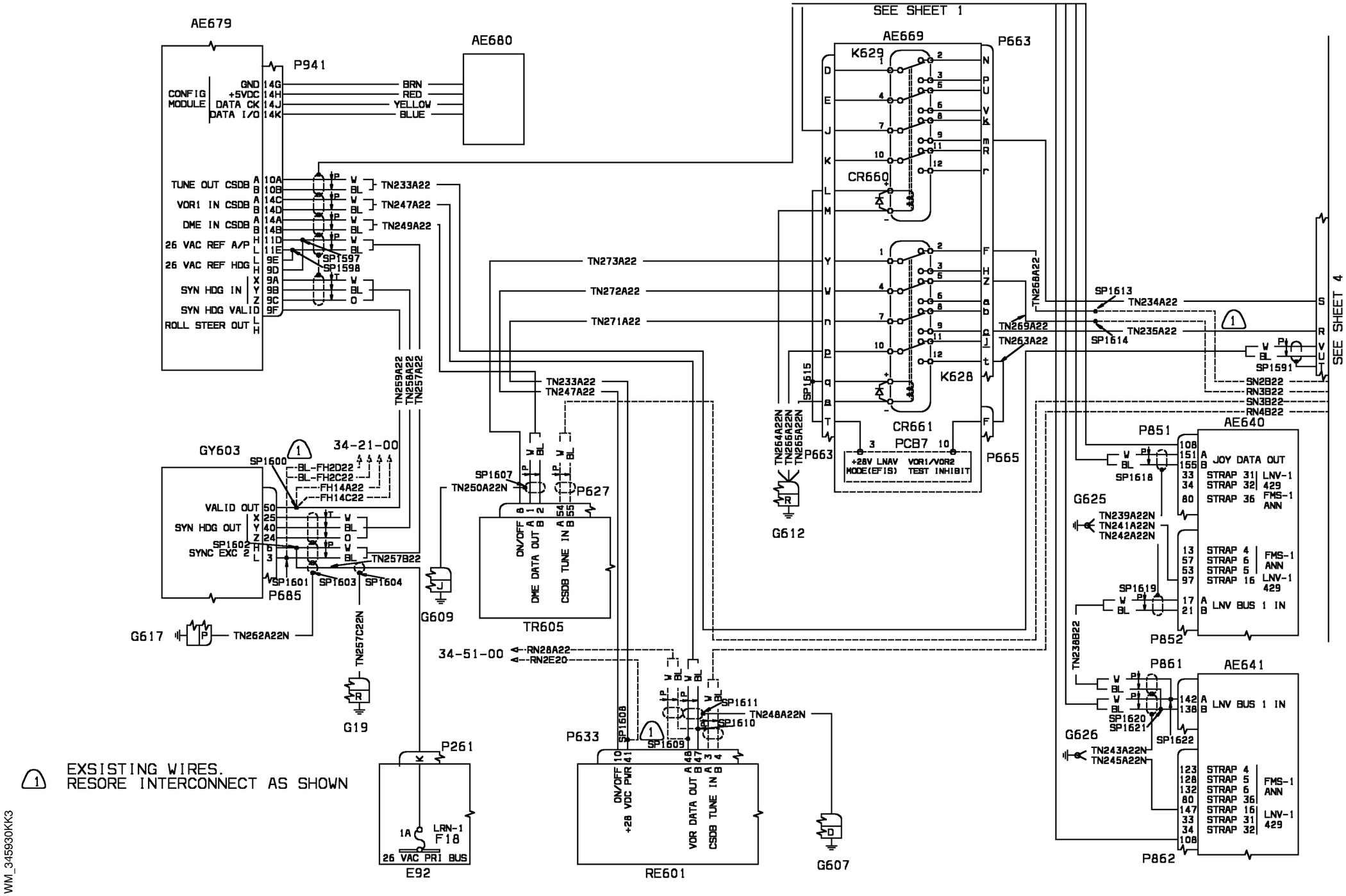


1 EXSISTING WIRES.
RESORE INTERCONNECT AS SHOWN

WM_345930KK3

| EFFECTIVITY: | DEPENDENT POSITION DETERMINING<br>FMS/UNS 1B (Optional) |
|---|---|

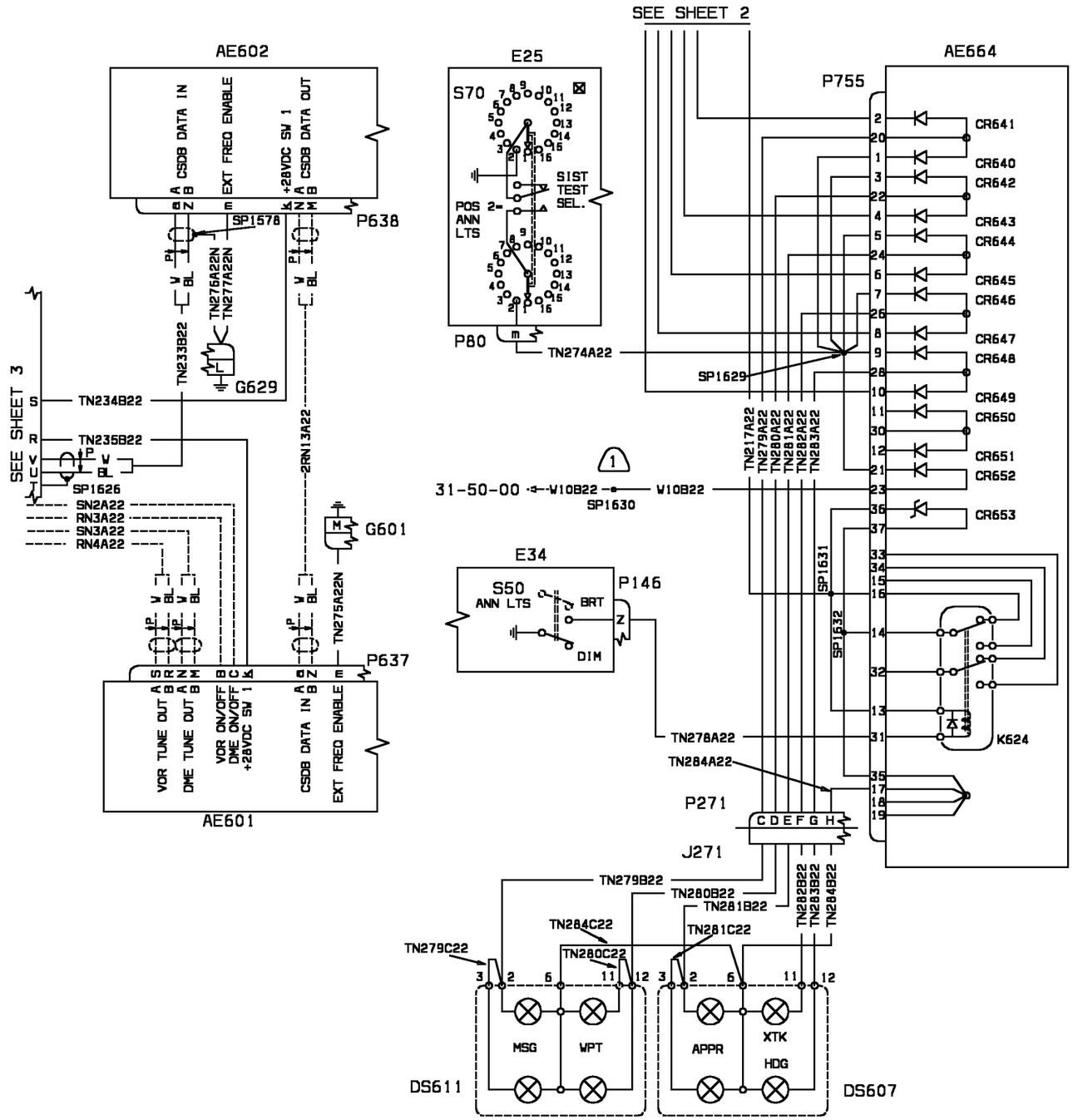


1 EXSISTING WIRES.
RESORE INTERCONNECT AS SHOWN

WM_345930KK4

| EFFECTIVITY: | DEPENDENT POSITION DETERMINING<br>FMS/UNS 1B (Optional) |
|---|---|

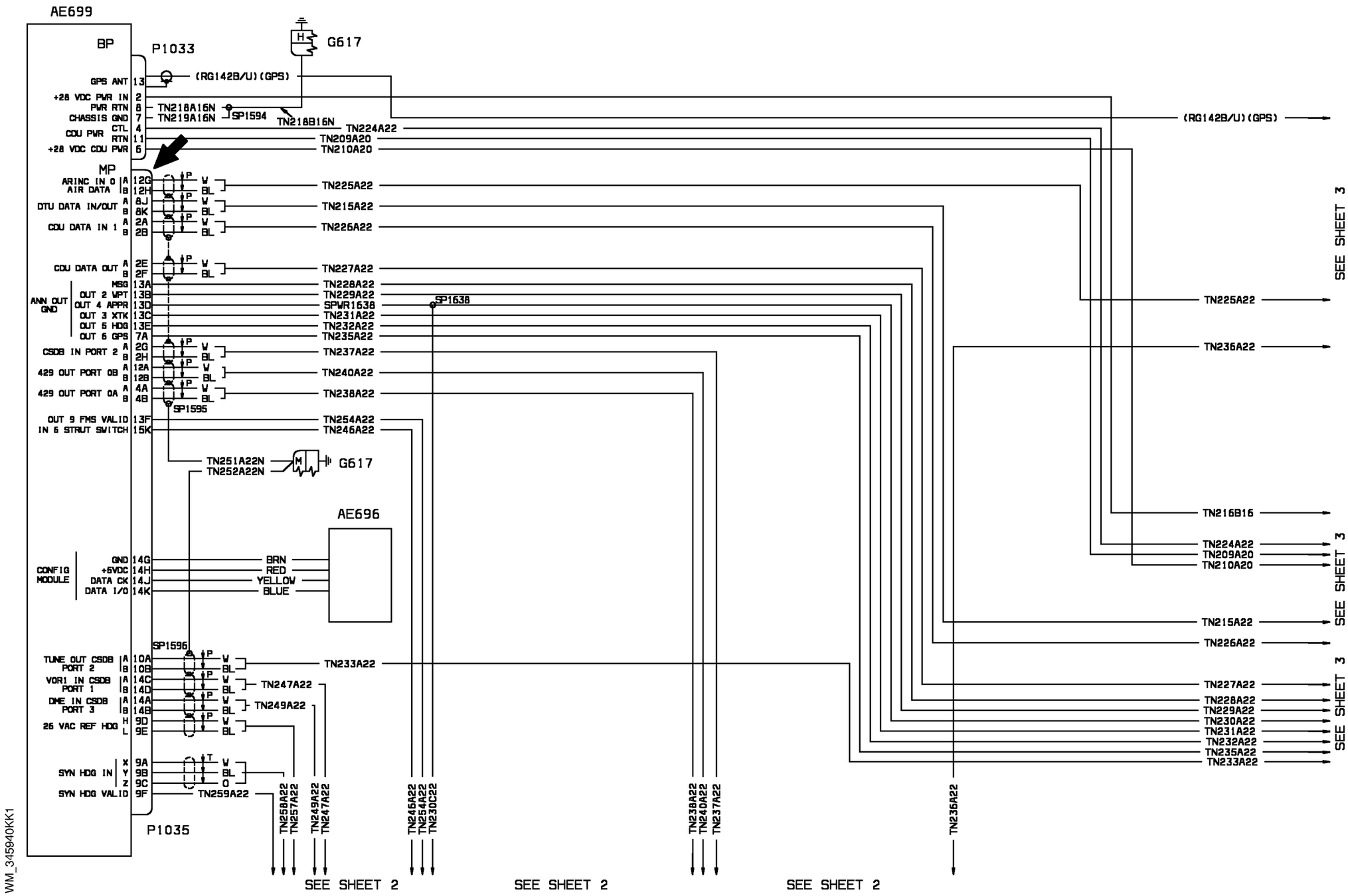


| EFFECTIVITY: | DEPENDENT POSITION DETERMINING<br>FMS/UNS 1D (Optional) |
|---|---|

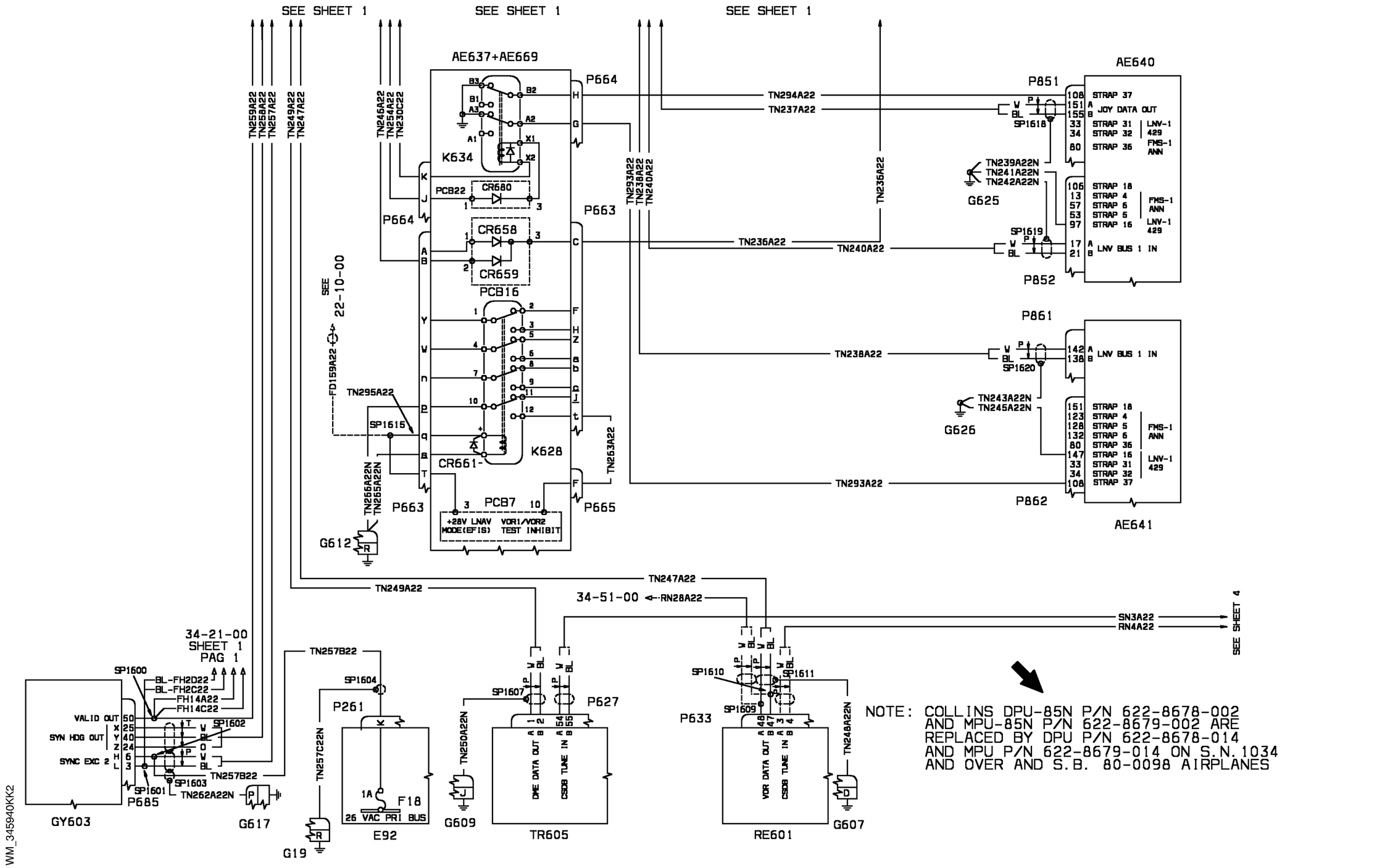


WM_345940KK2

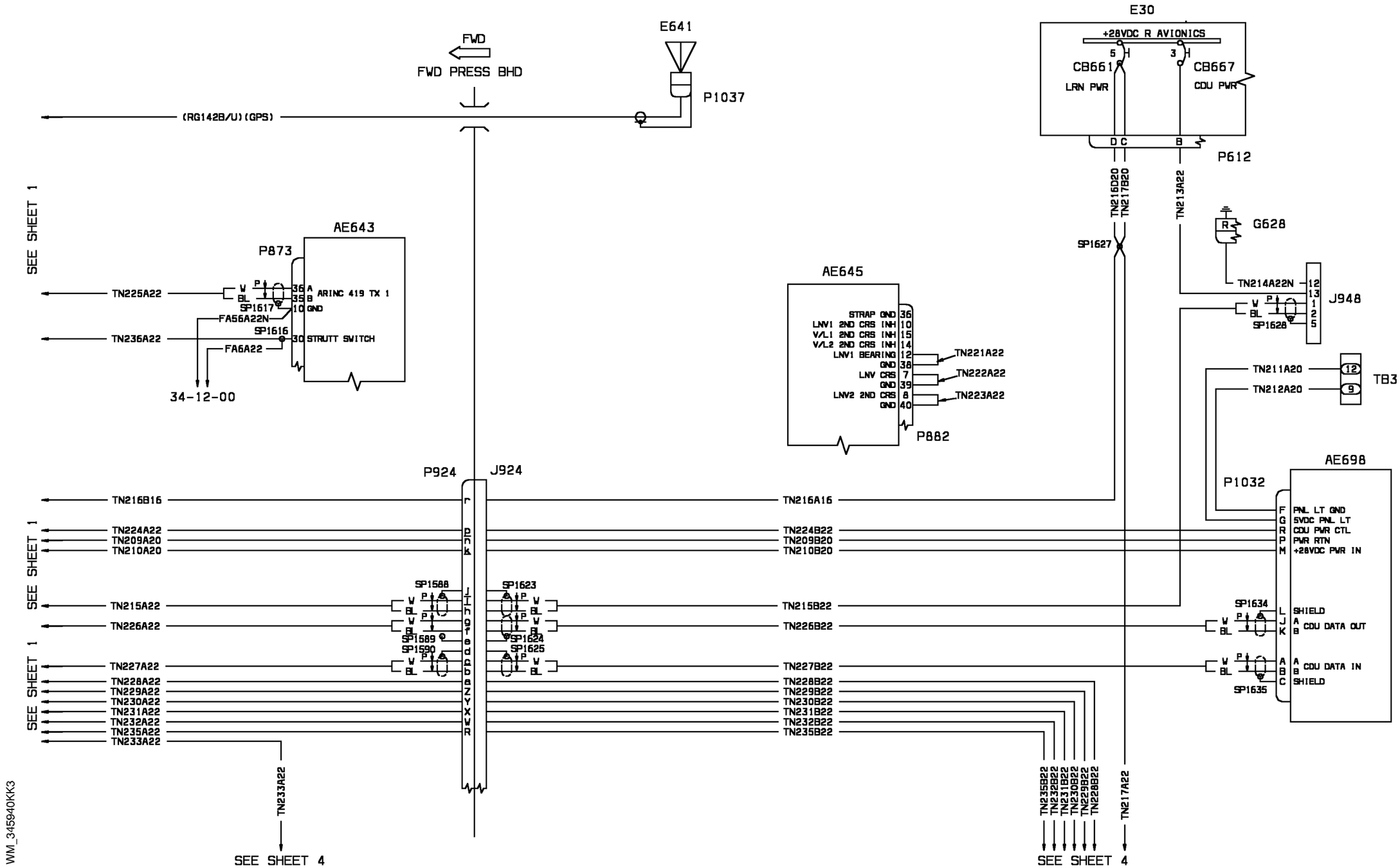


| EFFECTIVITY: | DEPENDENT POSITION DETERMINING<br>FMS/UNS 1D (Optional) |
|---|---|

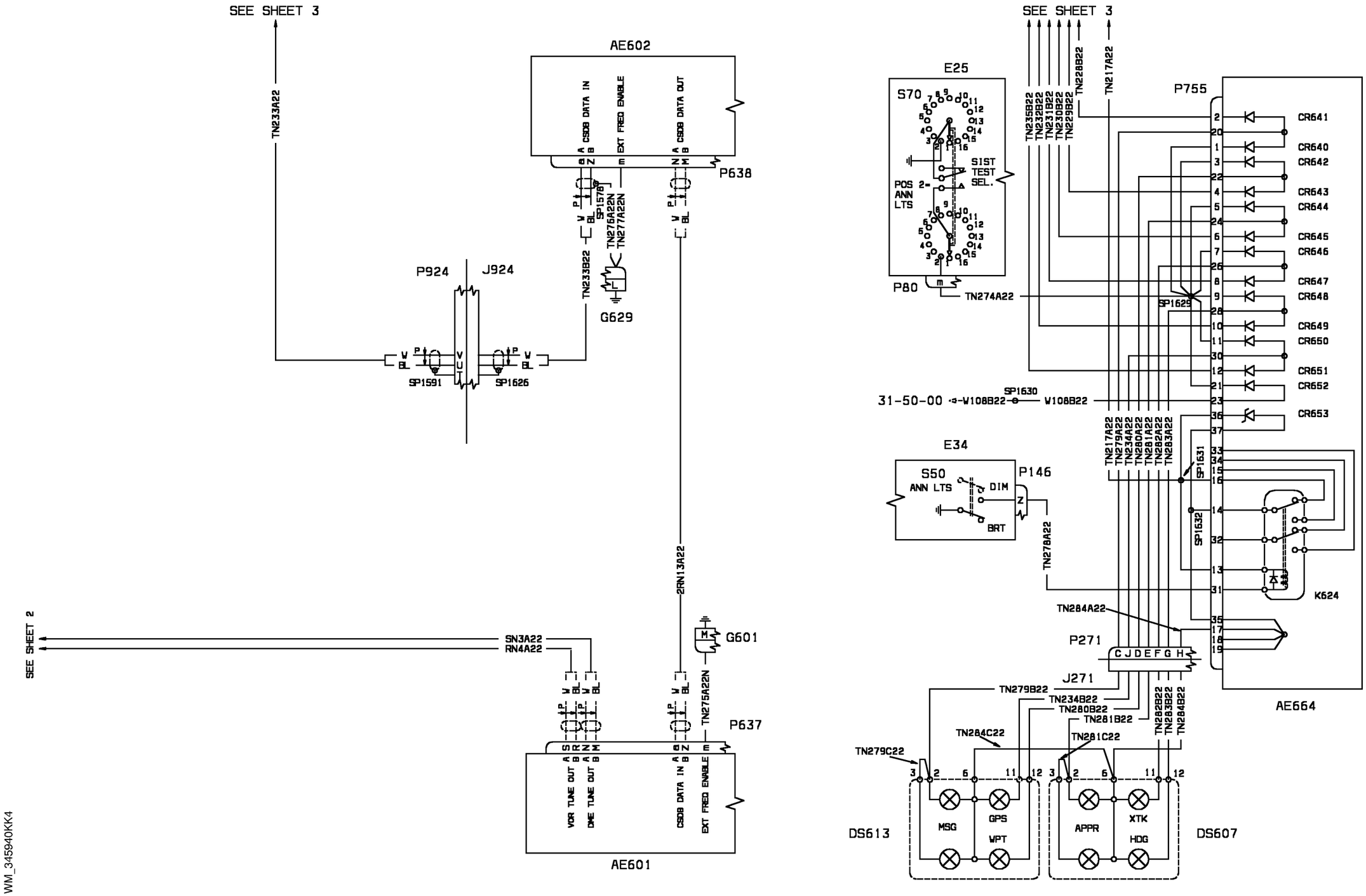


| EFFECTIVITY: | DEPENDENT POSITION DETERMINING<br>FMS/UNS 1D (Optional) |
|---|---|

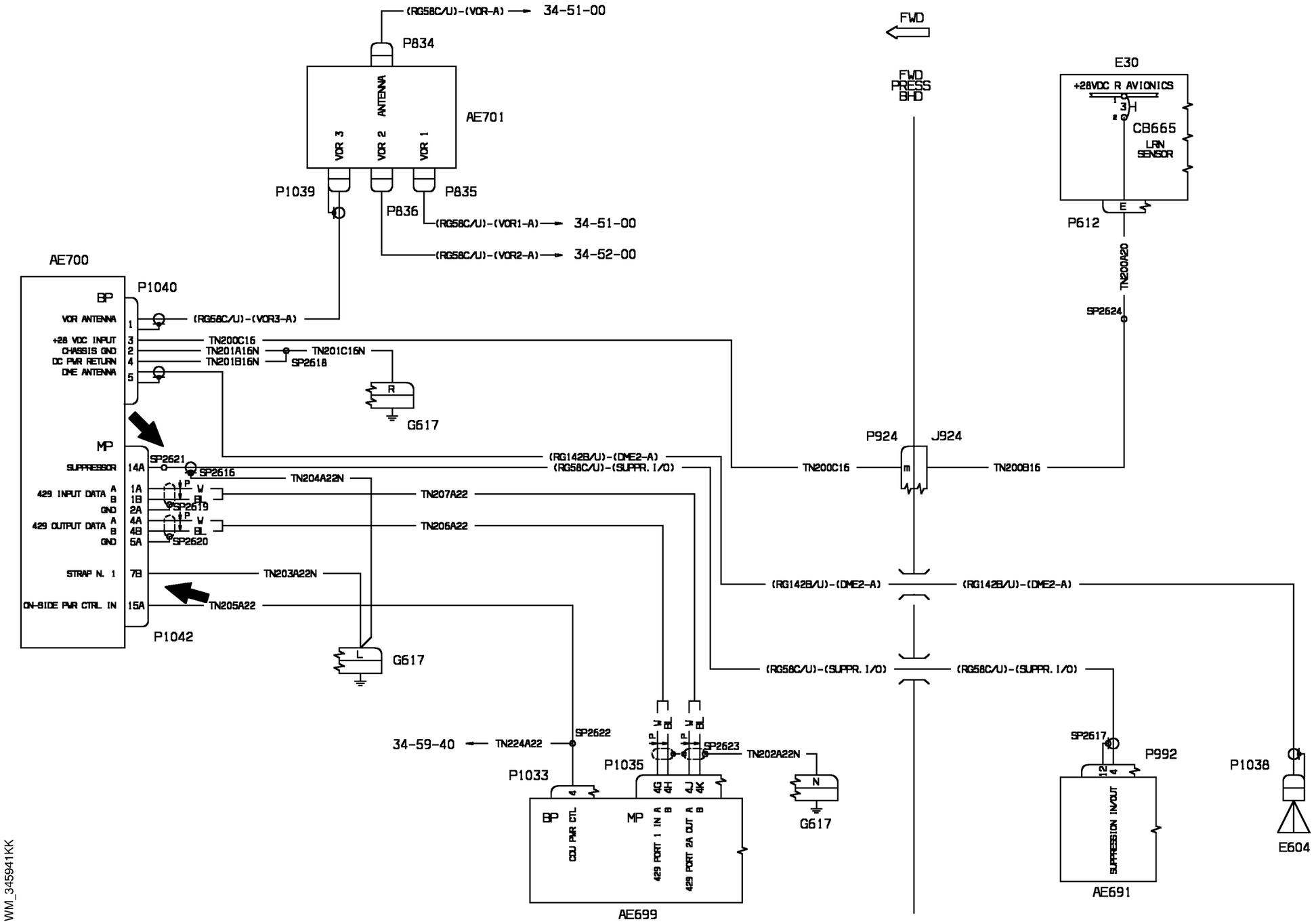


WM_345941KK

| EFFECTIVITY: | DEPENDENT POSITION DETERMINING<br>RRS/UNS 1D (Optional) |
|---|---|

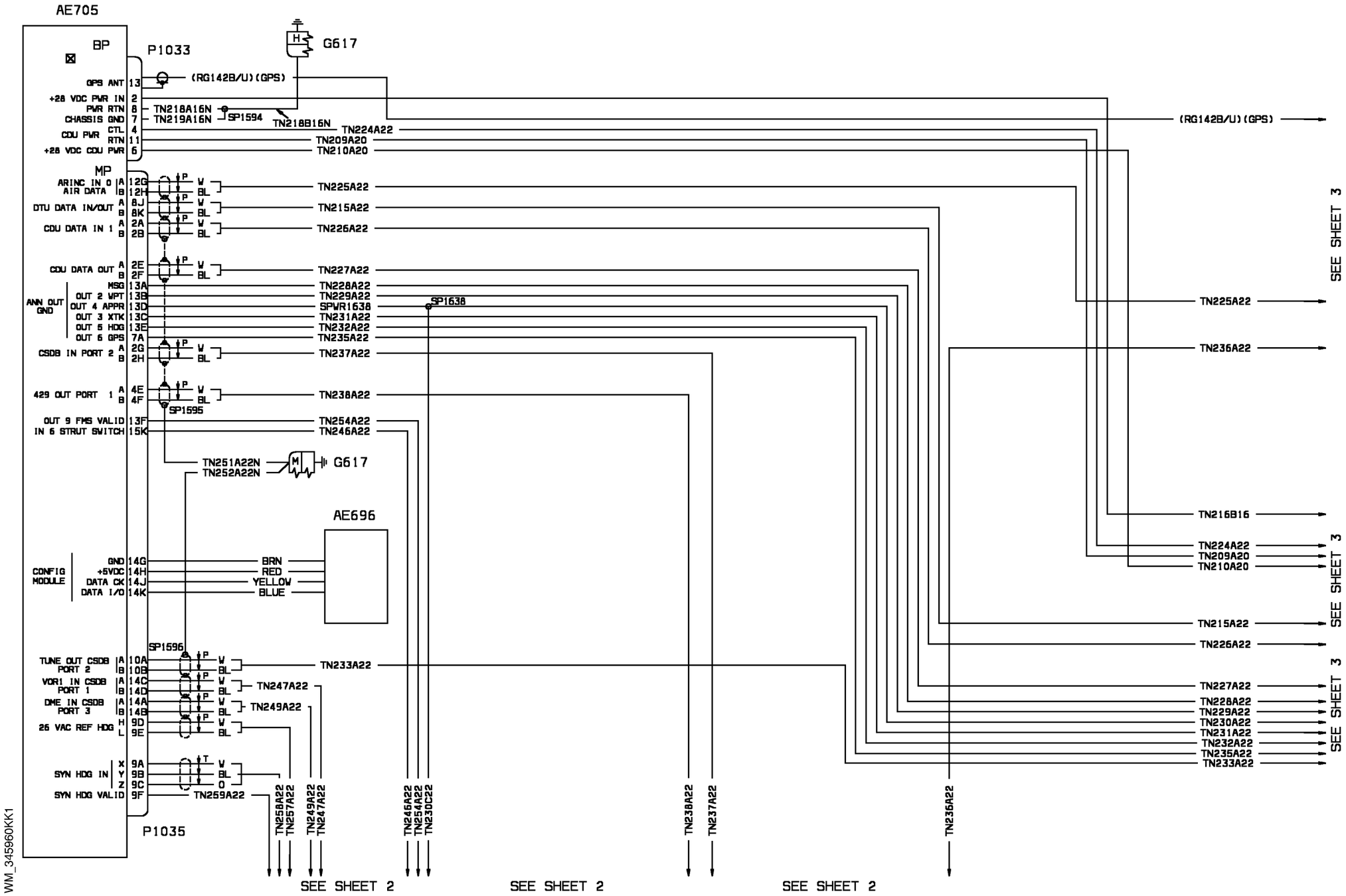


| EFFECTIVITY: | DEPENDENT POSITION DETERMINING<br>FMS/UNS 1K (Optional) |
|---|---|

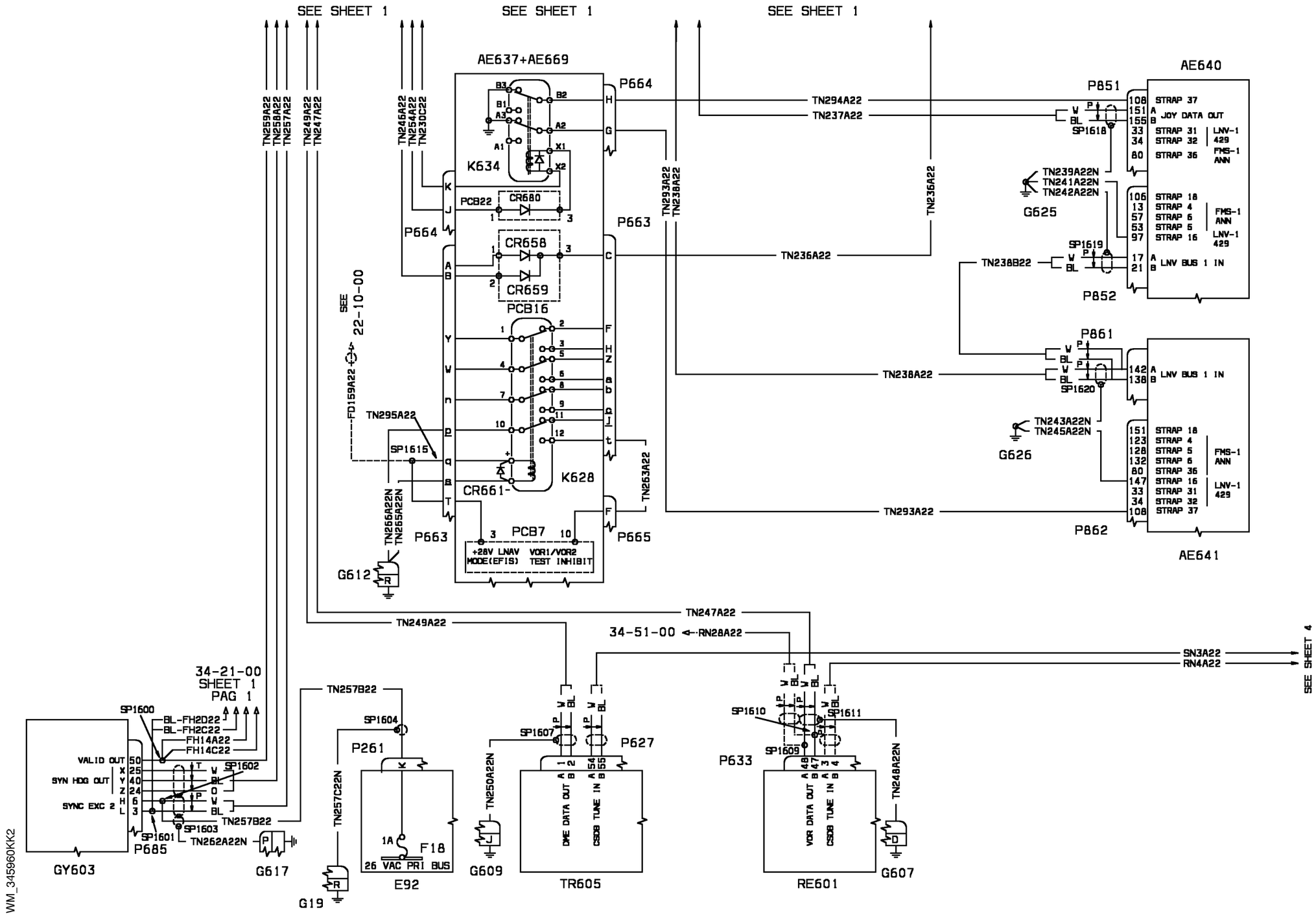


WM_345960KK2

| EFFECTIVITY: | DEPENDENT POSITION DETERMINING<br>FMS/UNS 1K (Optional) |
|---|---|

**34-59-60**

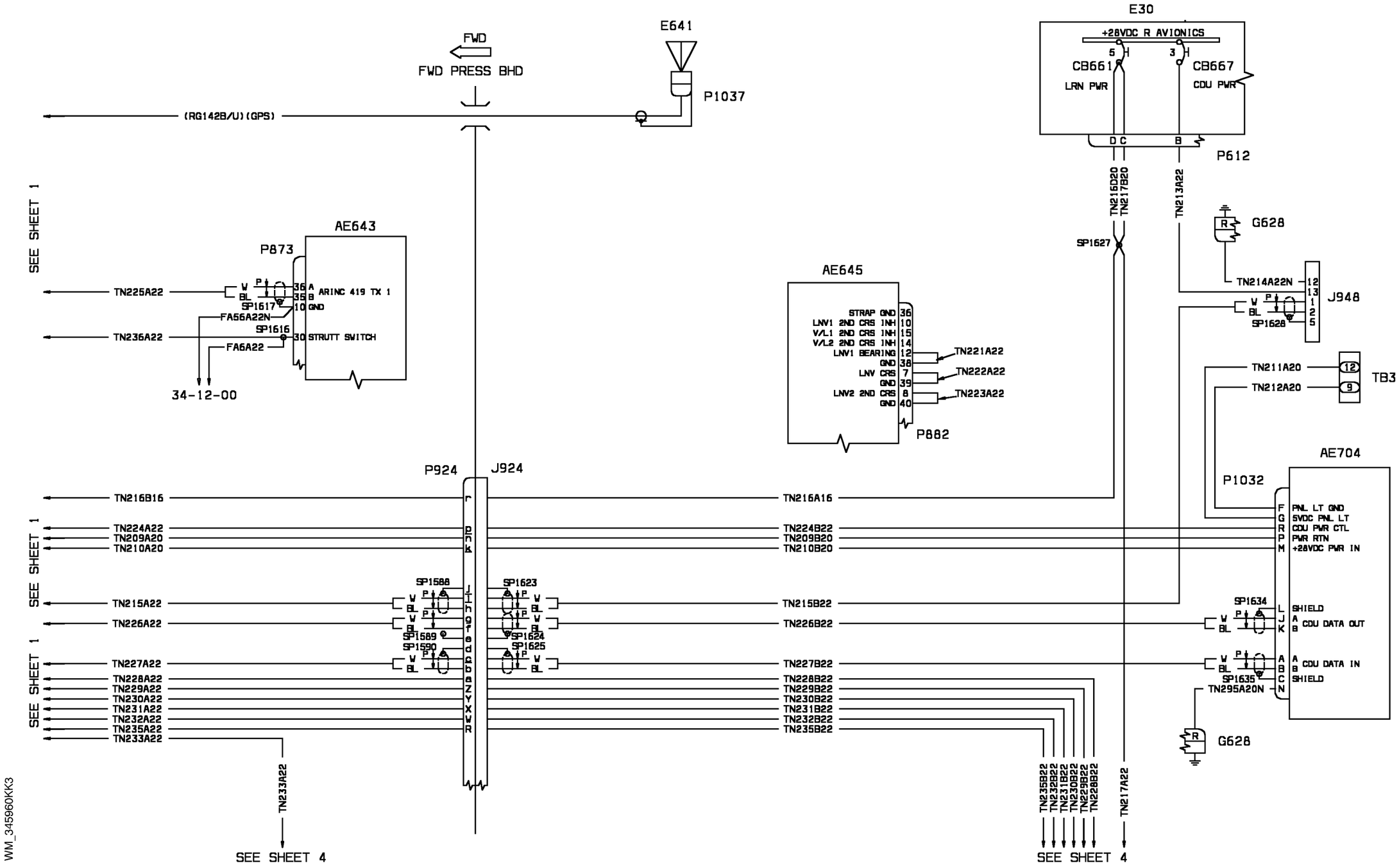


WM_345960KK3

| EFFECTIVITY: | DEPENDENT POSITION DETERMINING<br>FMS/UNS 1K (Optional) |
|---|---|

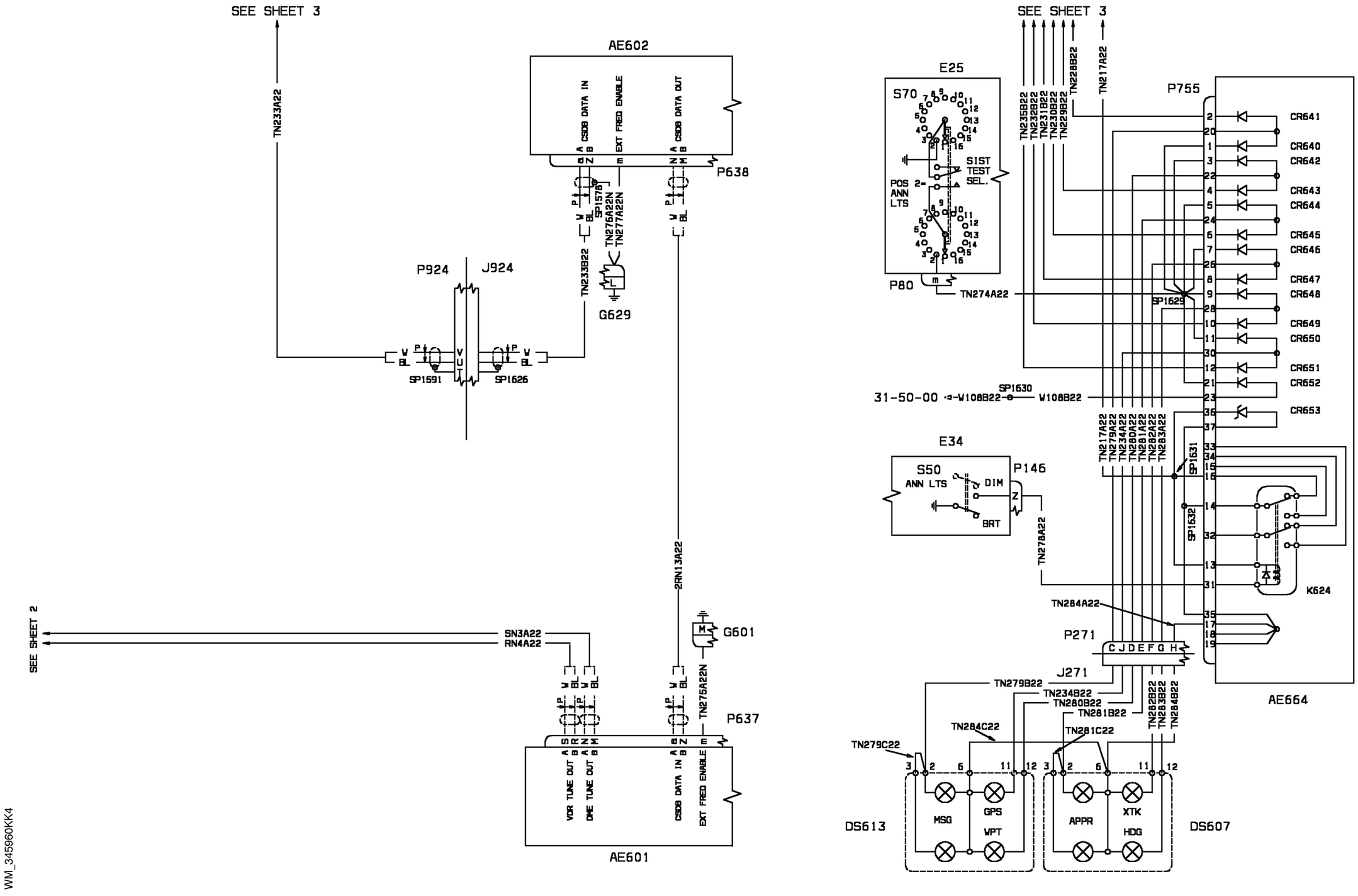


| EFFECTIVITY: | DEPENDENT POSITION DETERMINING<br>FMS/UNS 1K (Optional) |
|---|---|

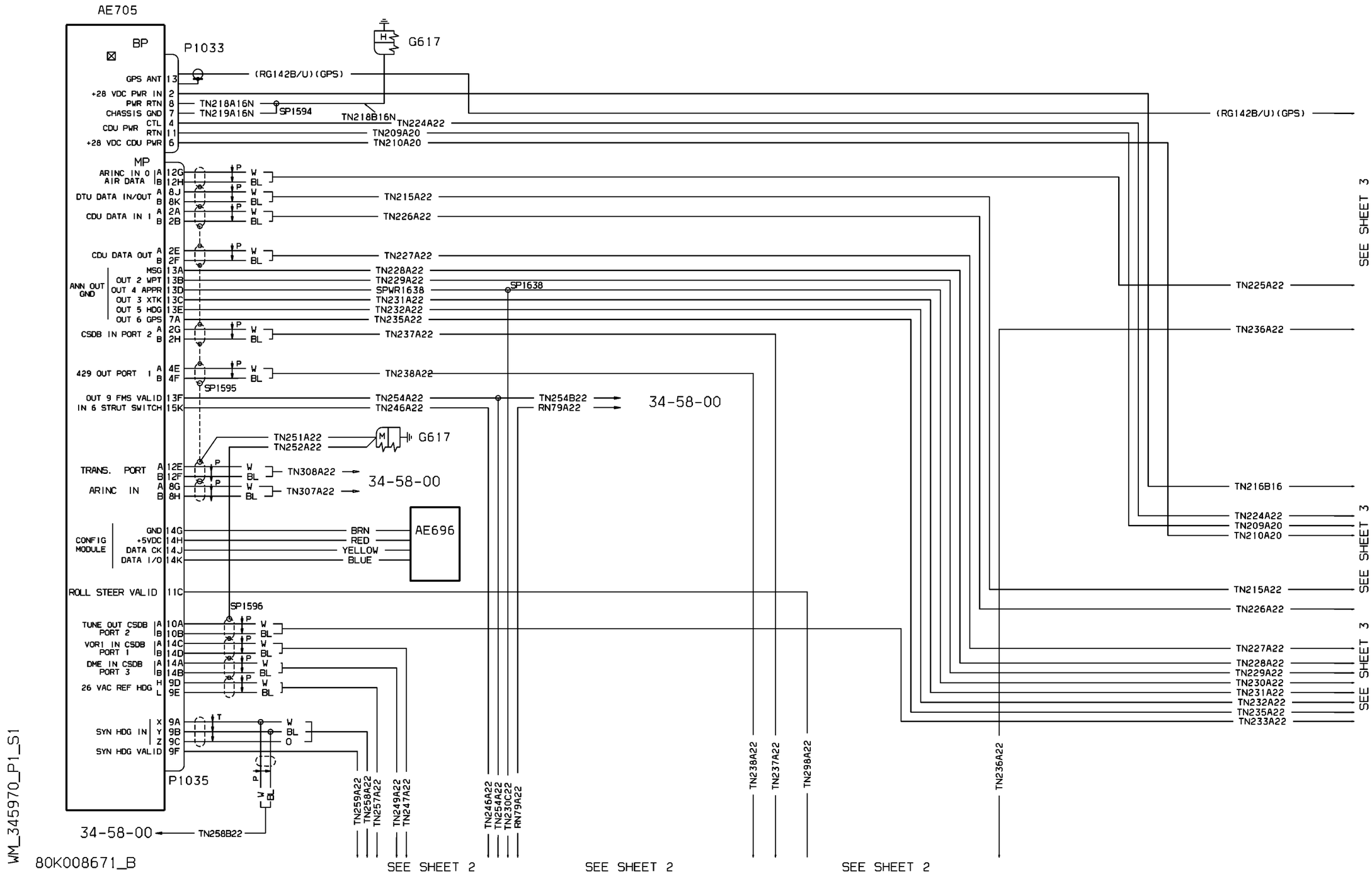


| EFFECTIVITY: | DEPENDENT POSITION DETERMINING<br>FMS/UNS 1K MMMS (Optional) |
|---|---|

**34-59-70**

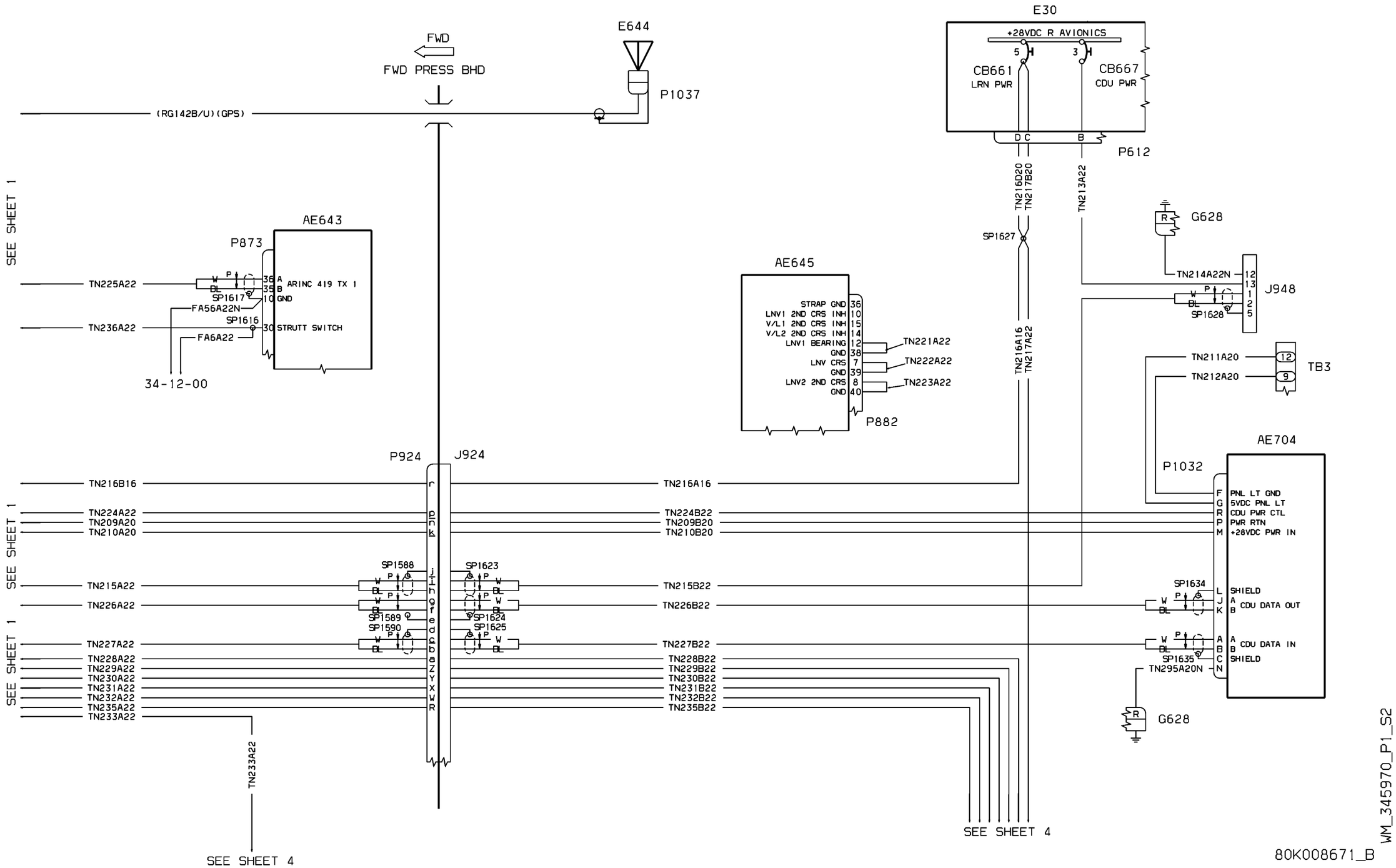


| EFFECTIVITY: | DEPENDENT POSITION DETERMINING<br>FMS/UNS 1K MMMS (Optional) |
|---|---|

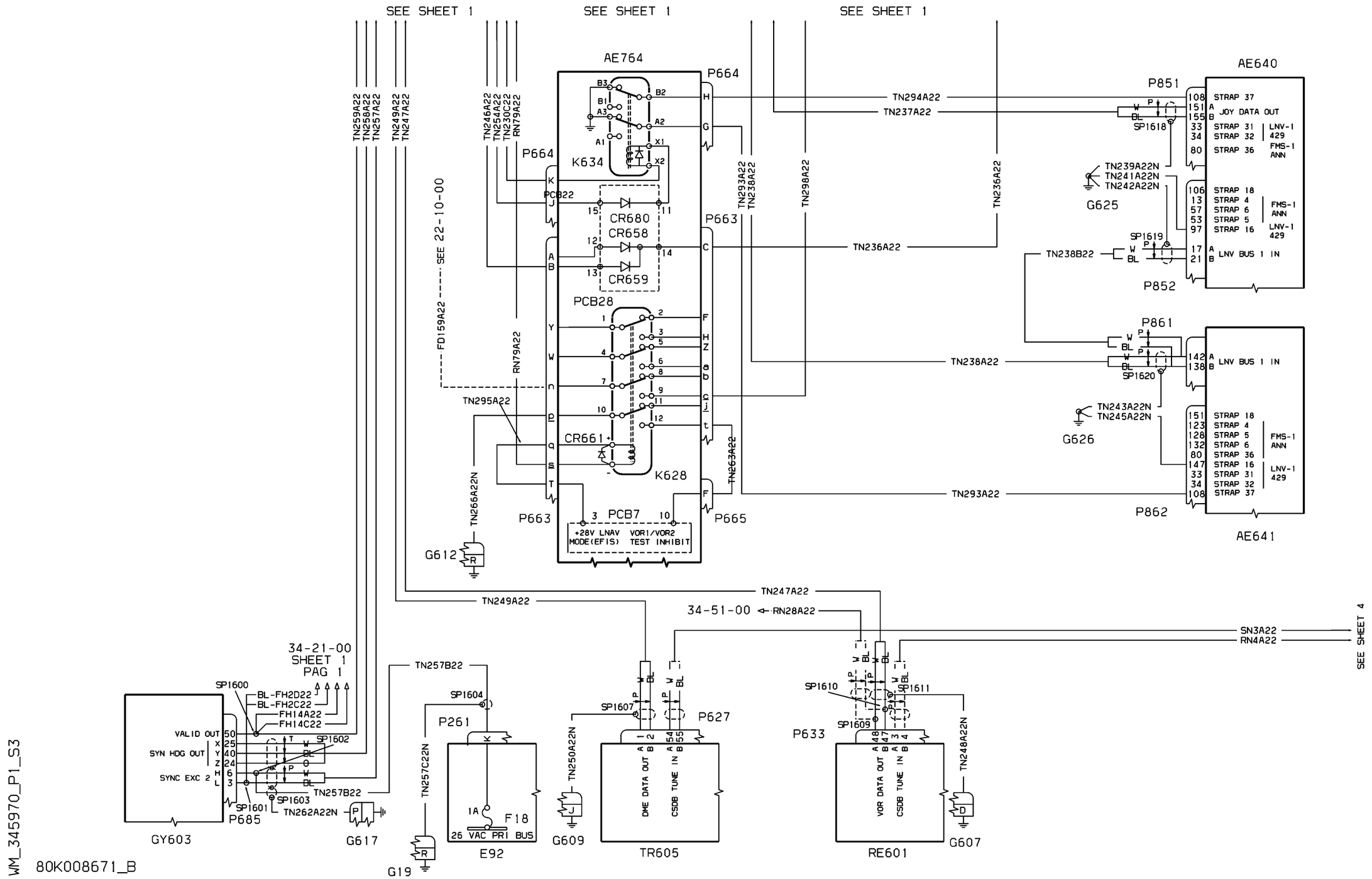


| EFFECTIVITY: | DEPENDENT POSITION DETERMINING<br>FMS/UNS 1K MMMS (Optional) |
|---|---|

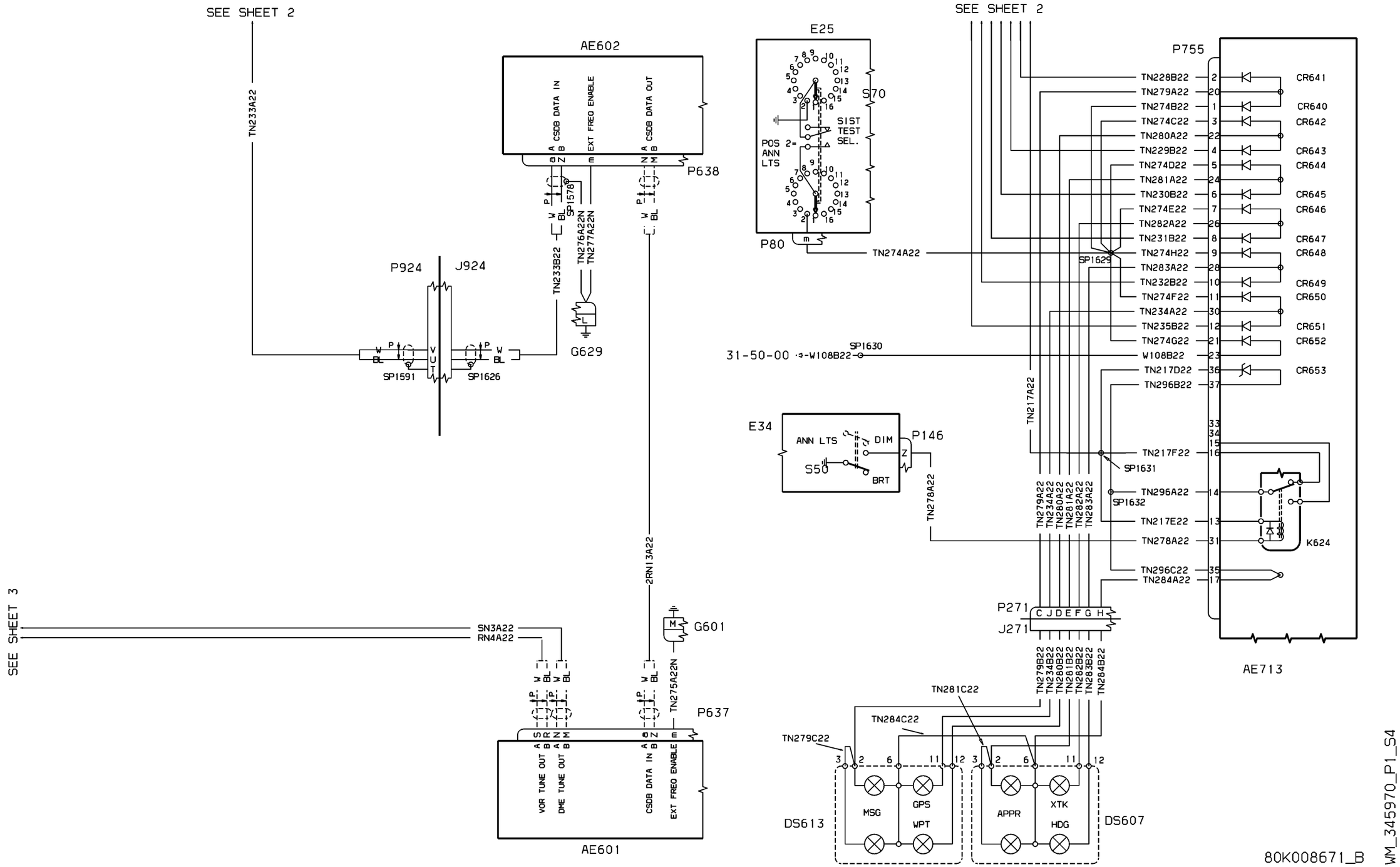


| EFFECTIVITY: | DEPENDENT POSITION DETERMINING<br>FMS/UNS 1K MMMS (Optional) |
|---|---|

80k008689_1/B & 80k008759_1/A

WM_345980_P1_S1

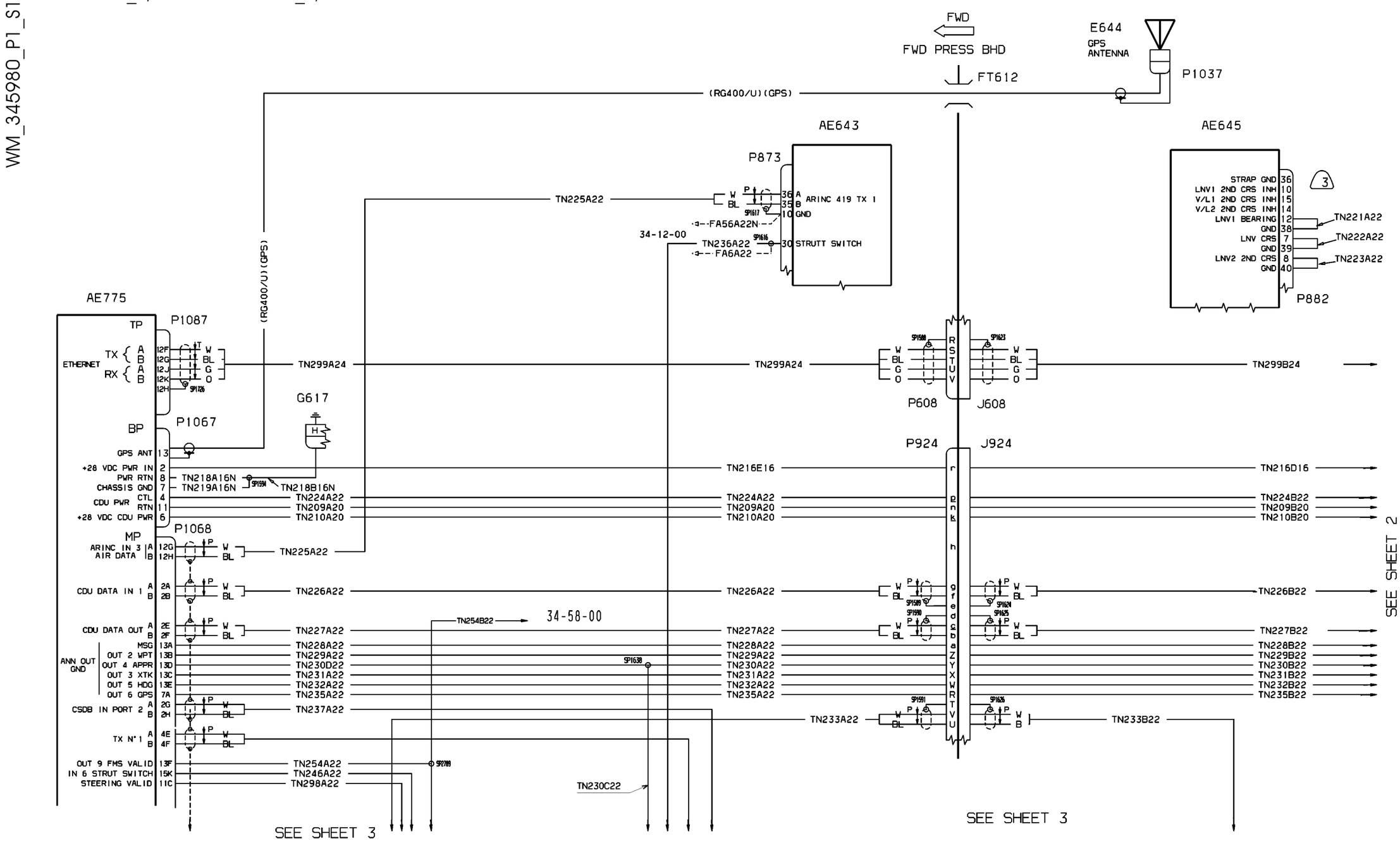


| EFFECTIVITY: | DEPENDENT POSITION DETERMINING |
|---|---|
| 1023-1025;1028-1030, 1076,1085,1090 | UNS 1L MMMS (AMI 1 & M.M.) |

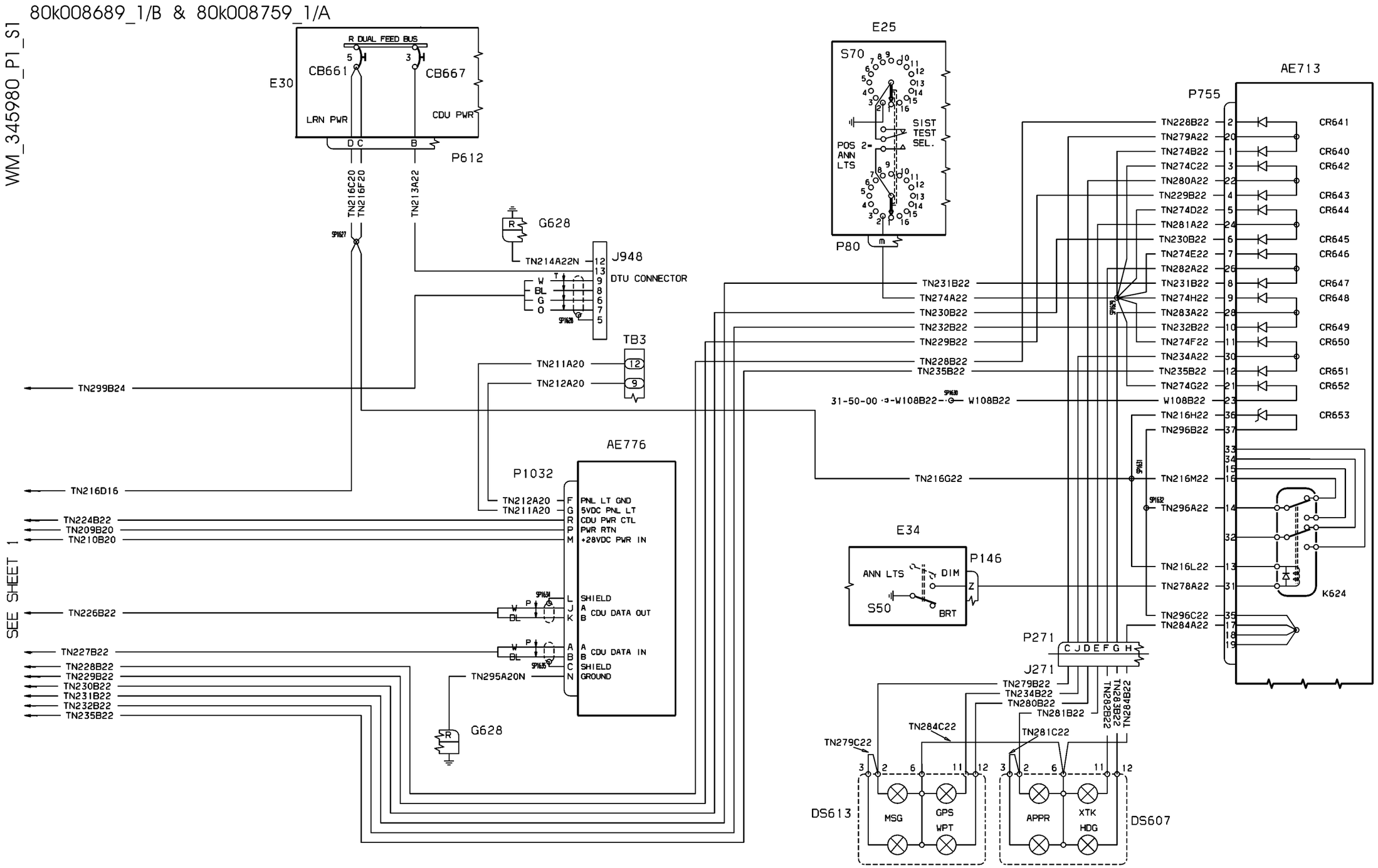


| EFFECTIVITY: | DEPENDENT POSITION DETERMINING |
|---|---|
| 1023-1025;1028-1030, 1076,1085,1090 | UNS 1L MMMS (AMI 1 & M.M.) |

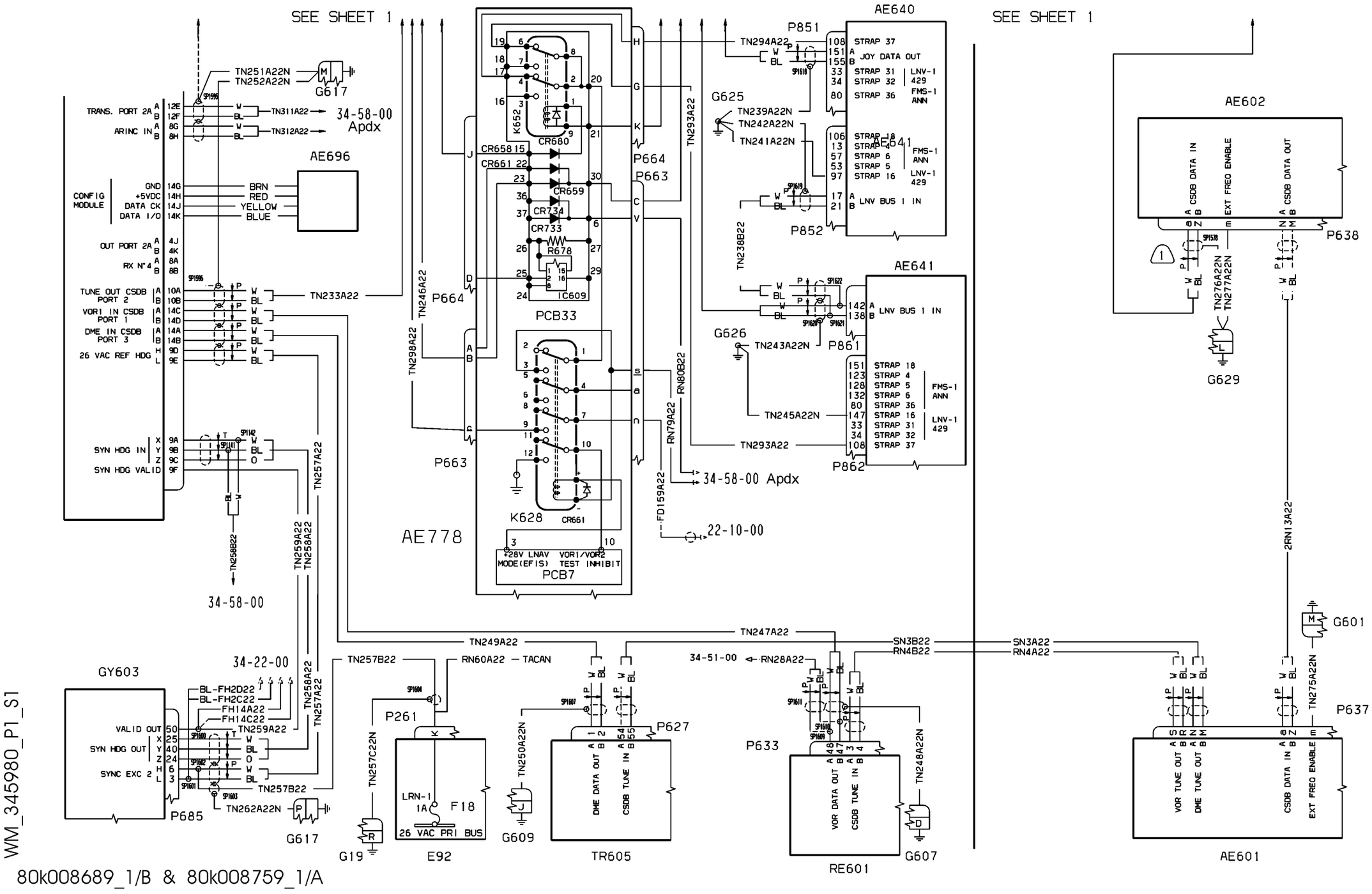


| EFFECTIVITY: | DEPENDENT POSITION DETERMINING |
|---|---|
| 1023-1025;1028-1030, 1076,1085,1090 | UNS 1L MMMS (AMI 1 & M.M.) |

**34-59-80**

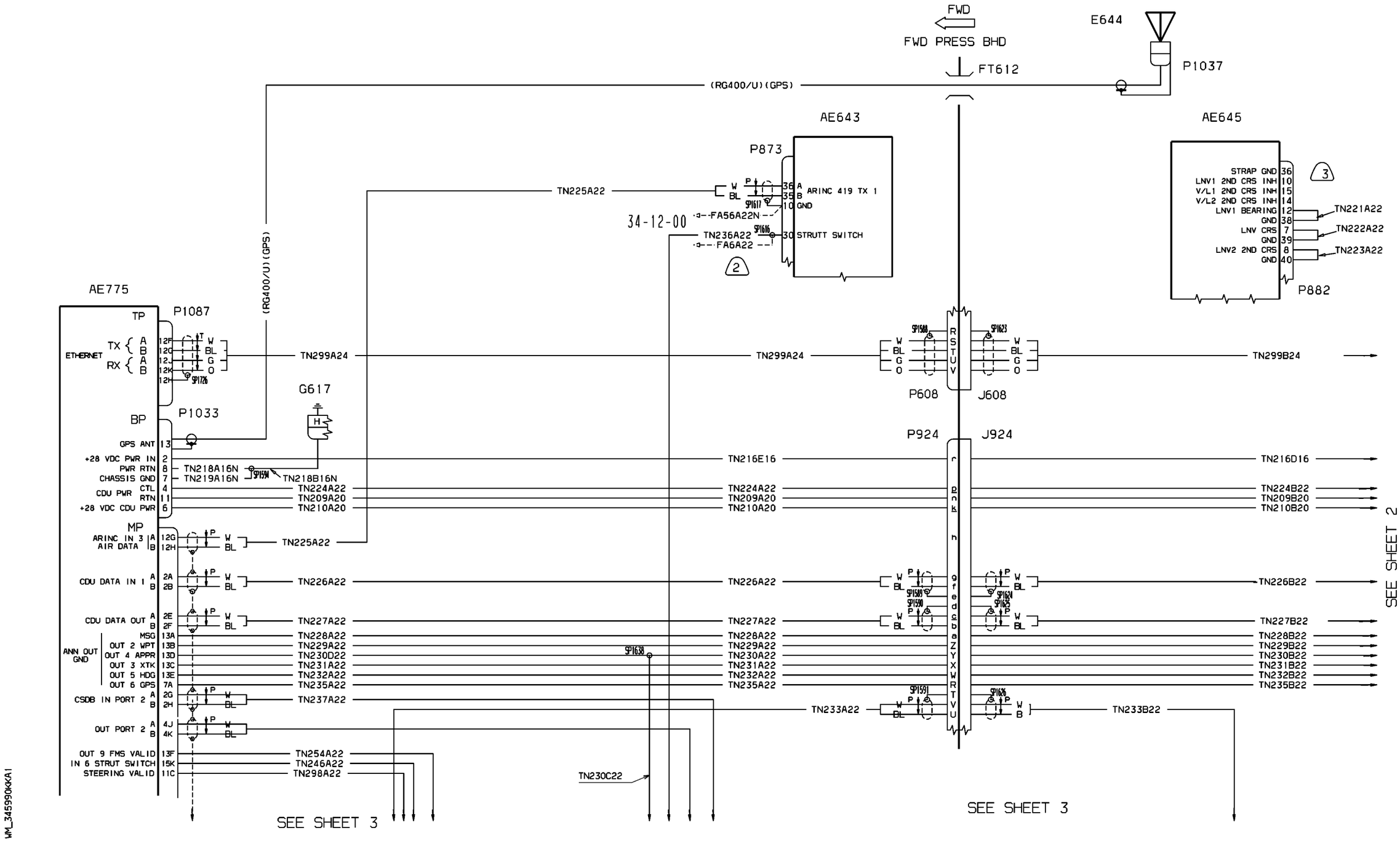


| EFFECTIVITY: | DEPENDENT POSITION DETERMINING<br>FMS/UNS 1L (Optional) |
|---|---|

**34-59-90**

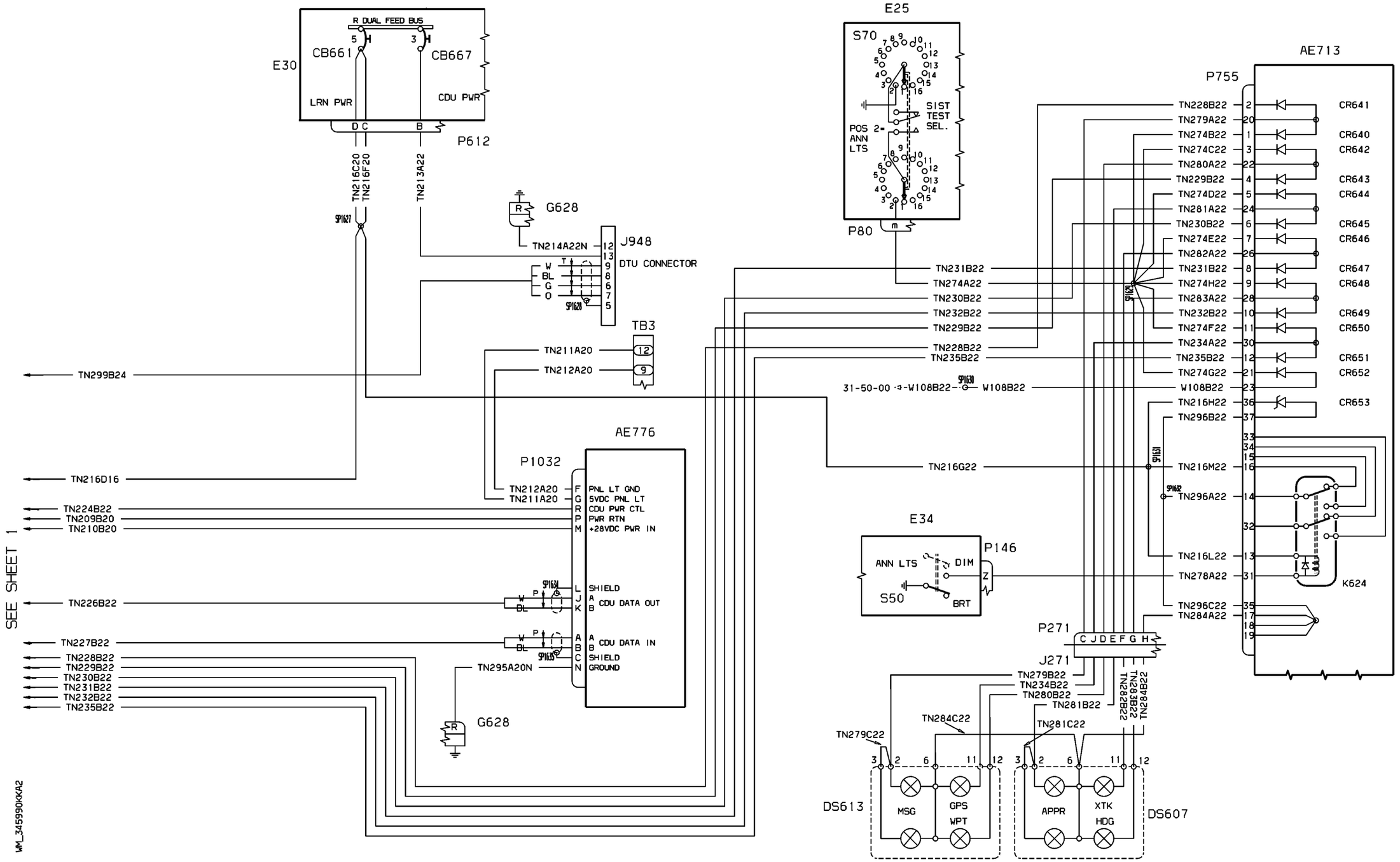


| EFFECTIVITY: | DEPENDENT POSITION DETERMINING<br>FMS/UNS 1L (Optional) |
|---|---|

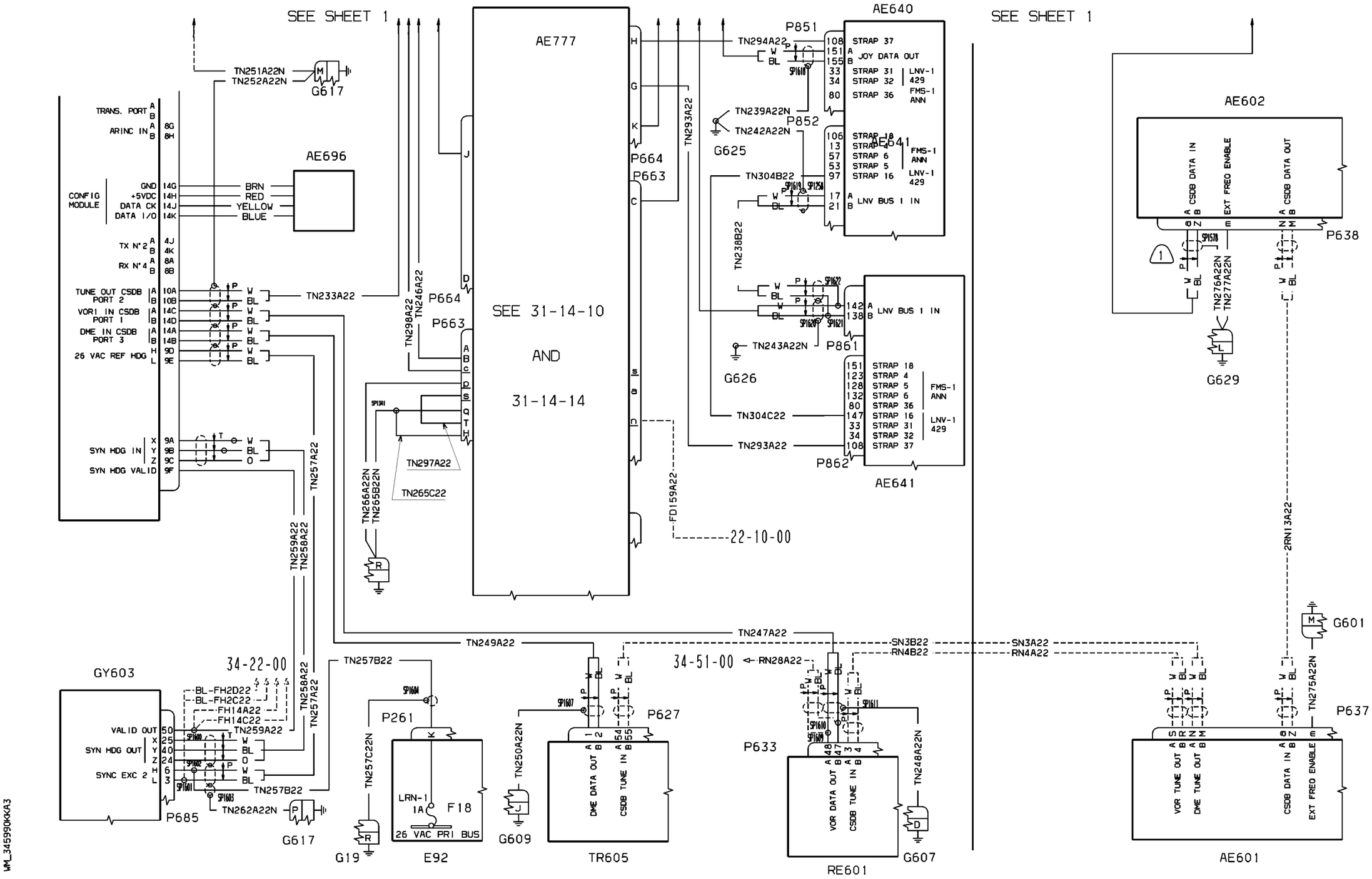


| EFFECTIVITY: | DEPENDENT POSITION DETERMINING<br>FMS/UNS 1L (Optional) |
|---|---|

**34-59-90**



WM_345990KKA3

CHAPTER 35 - OXYGEN
LIST OF EFFECTIVE PAGES

| CHAPTER SECTION SUBJECT | PAGE | SHEET | DATE |
|---|---|---|---|
| 35 - LOEP | 1 | | Oct. 30/09 |
| | 2 | | Oct. 30/09 |
| 35 - TOC | 1 | | Oct. 30/09 |
| | 2 | | Oct. 30/09 |
| 35-10-00 | 1 | | Oct. 30/09 |
| 35-10-00 | 2 | | Oct. 30/09 |

INTENTIONALLY LEFT BLANK

CHAPTER 35 - OXYGEN
TABLE OF CONTENTS


| SUBJECT | CHAPTER SECTION SUBJECT | PAGE | SHEET |
|---|---|---|---|
| CREW | | | |
| Oxygen Control And Indication | 35-10-00 | 1 | |
| Oxygen Control And Indication | 35-10-00 | 2 | |

INTENTIONALLY LEFT BLANK

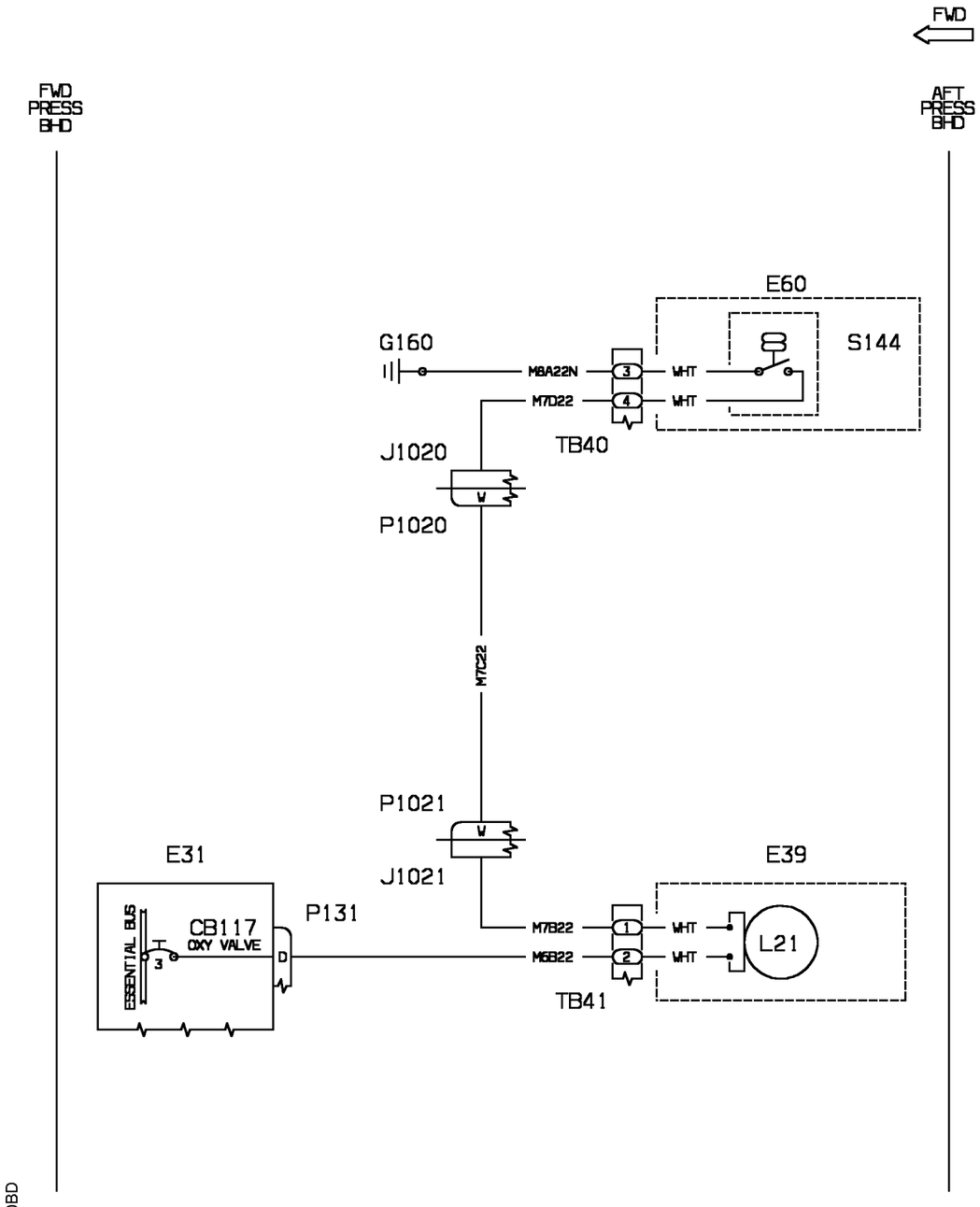
FWD
FWD
PRESS
BHD
AFT
PRESS
BHD
E60
S144
G160
M8A22N
3
WHT
M7D22
4
WHT
TB40
J1020
W
P1020
M7C22
P1021
W
J1021
E31
E39
P131
CB117
OXY VALVE
ESSENTIAL BUS
3
D
M7B22
1
WHT
M6B22
2
WHT
L21
TB41

WM_351000BD

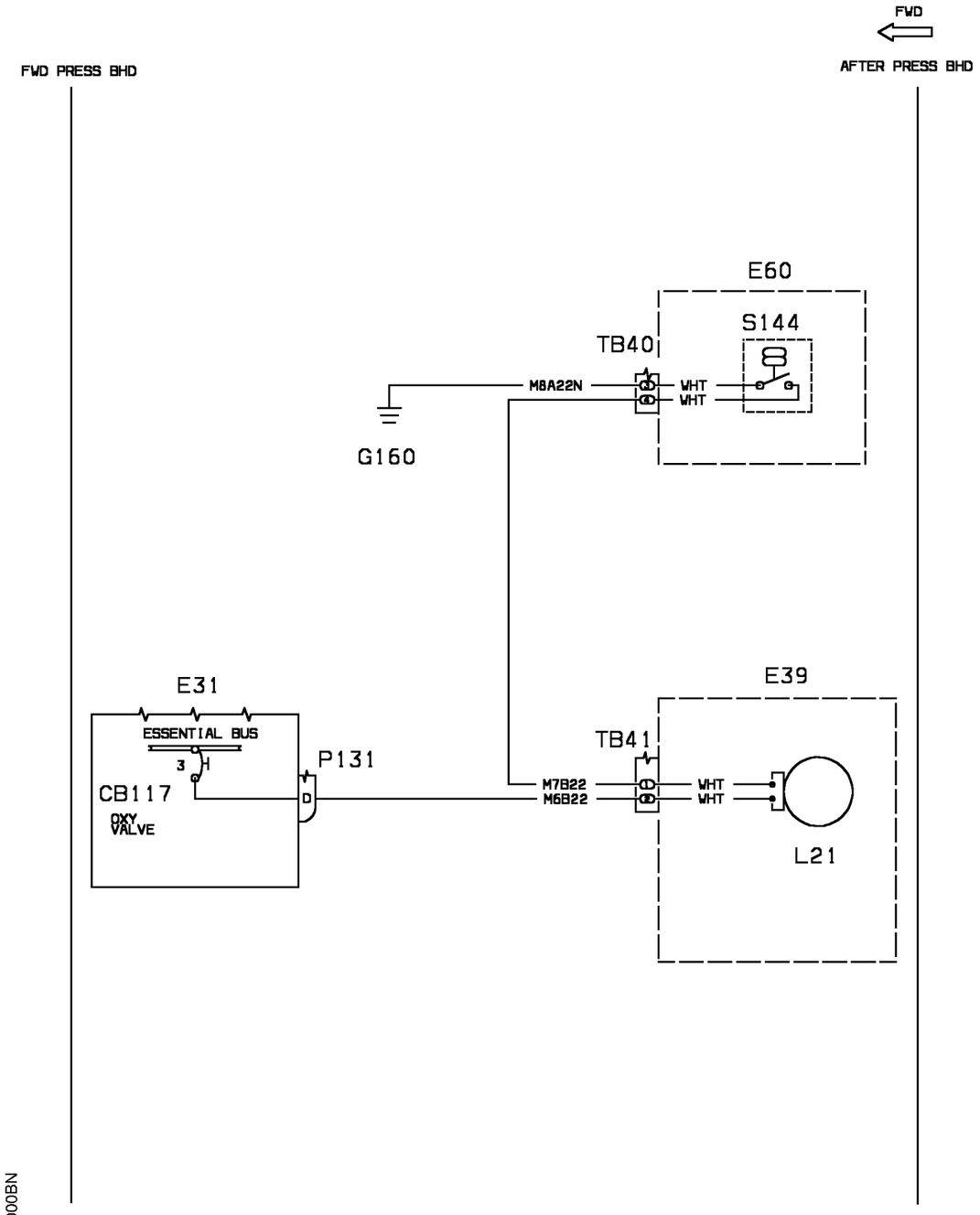
FWD
FWD PRESS BHD
AFTER PRESS BHD
E60
S144
TB40
M8A22N
WHT
WHT
G160
E31
ESSENTIAL BUS
3
H
CB117
OXY
VALVE
P131
D
E39
TB41
M7B22
M6B22
WHT
WHT
L21

WM_351000BN

CHAPTER 45 - CENTRAL MAINTENANCE SYSTEM
LIST OF EFFECTIVE PAGES

| CHAPTER SECTION SUBJECT | PAGE | SHEET | DATE |
|---|---|---|---|
| 45 - LOEP | 1 | | Oct. 30/09 |
| | 2 | | Oct. 30/09 |
| 45 - TOC | 1 | | Oct. 30/09 |
| | 2 | | Oct. 30/09 |
| 45-45-00 | 1 | | Oct. 30/09 |
| 45-60-00 | 1 | 1 | Oct. 30/09 |
| 45-60-00 | 1 | 2 | Oct. 30/09 |

INTENTIONALLY LEFT BLANK

CHAPTER 45 - CENTRAL MAINTENANCE SYSTEM
TABLE OF CONTENTS


| SUBJECT | CHAPTER SECTION SUBJECT | PAGE | SHEET |
|---|---|---|---|
| CENTRAL MAINTENANCE SYSTEM | | | |
| D.T.U. System | 45-45-00 | 1 | |
| CMS/PROPELLERS | | | |
| A.D.A.S. System (Opt.) | 45-60-00 | 1 | 1 |
| A.D.A.S. System (Opt.) | 45-60-00 | 1 | 2 |

INTENTIONALLY LEFT BLANK

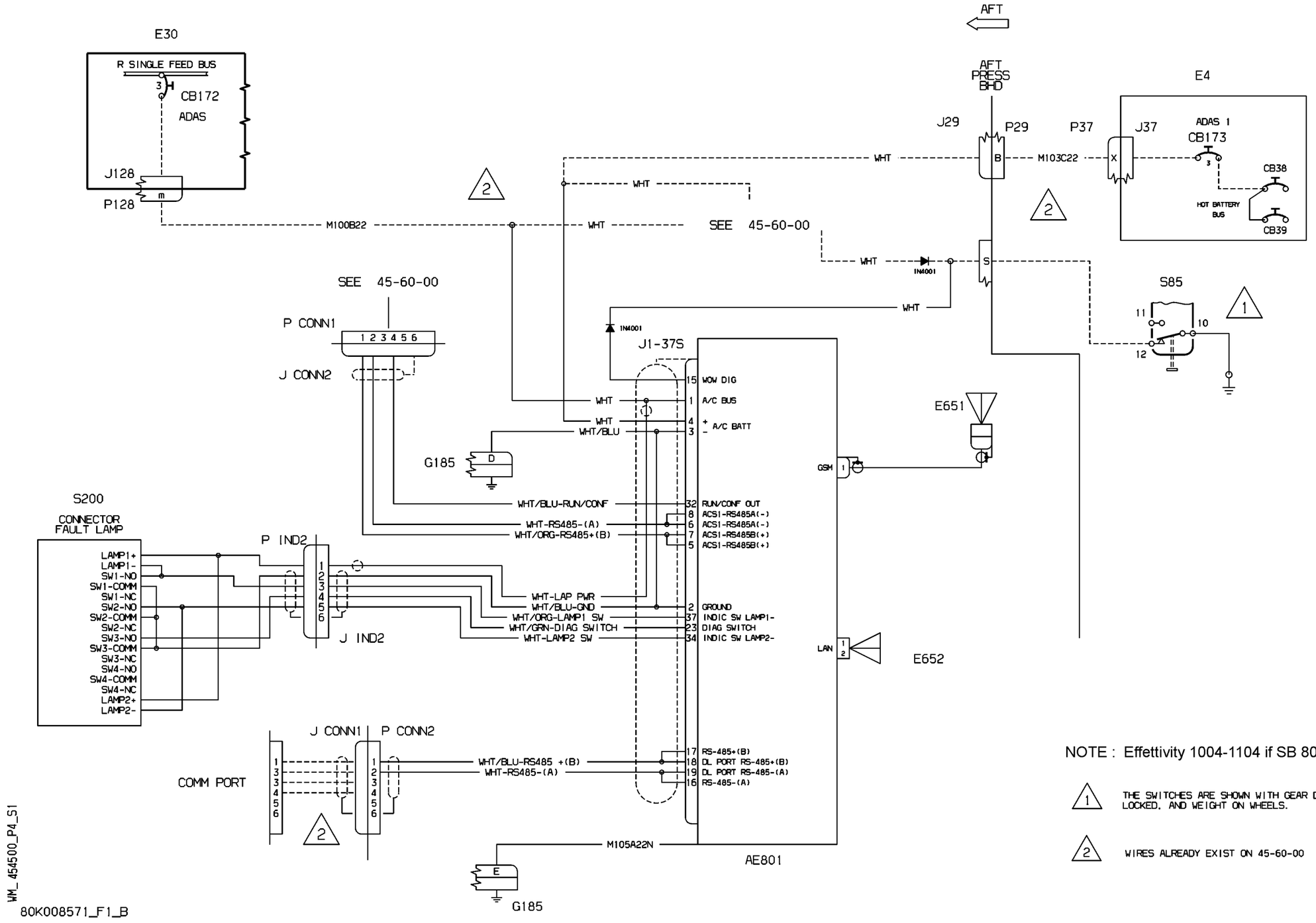


NOTE : Effettivity 1004-1104 if SB 80-0216 embodied

1 THE SWITCHES ARE SHOWN WITH GEAR DOWN AND LOCKED, AND WEIGHT ON WHEELS.

2 WIRES ALREADY EXIST ON 45-60-00

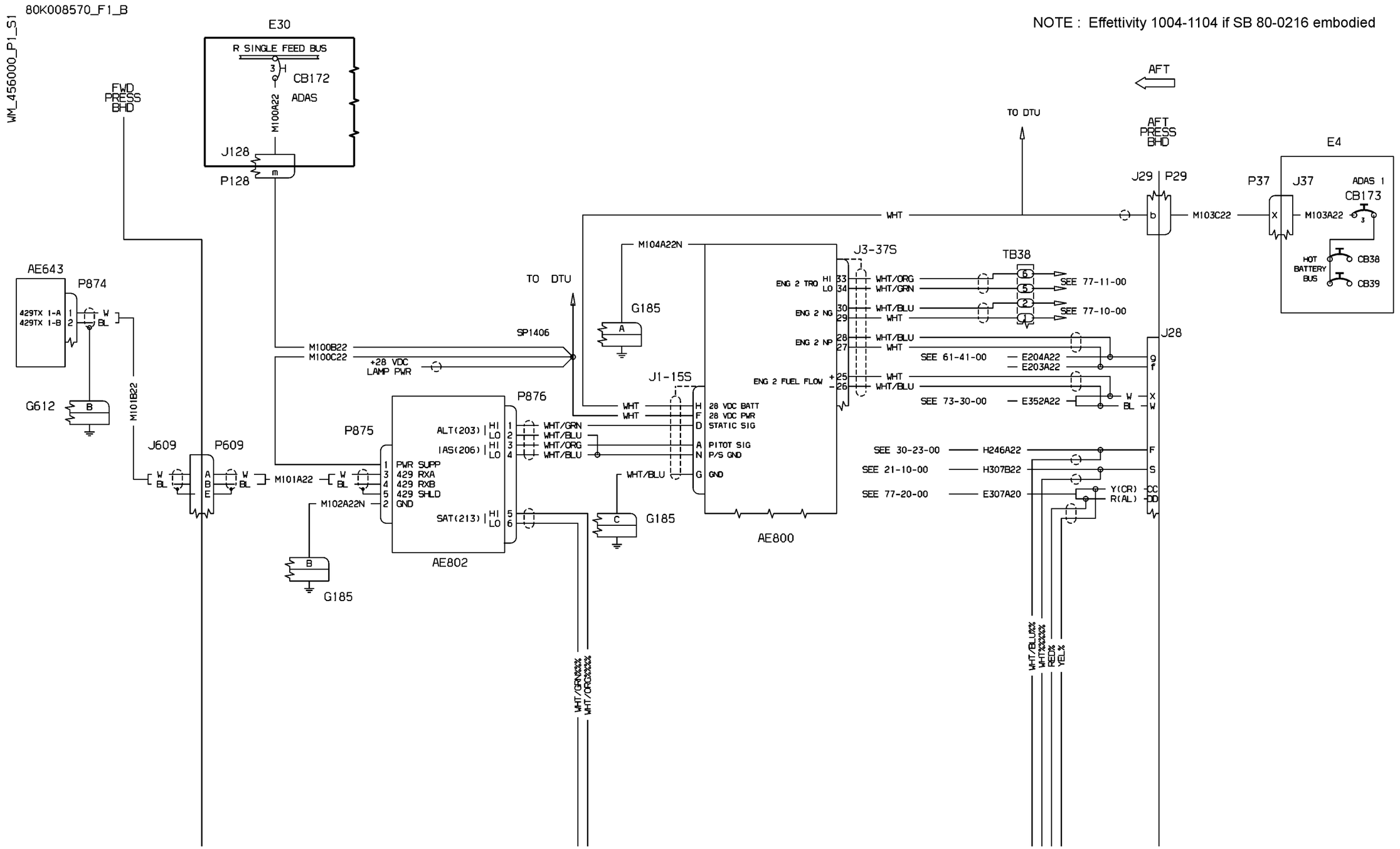


| EFFECTIVITY: | CMS/PROPELLERS<br>A.D.A.S. System (Opt.) |
|---|---|

**45-60-00**

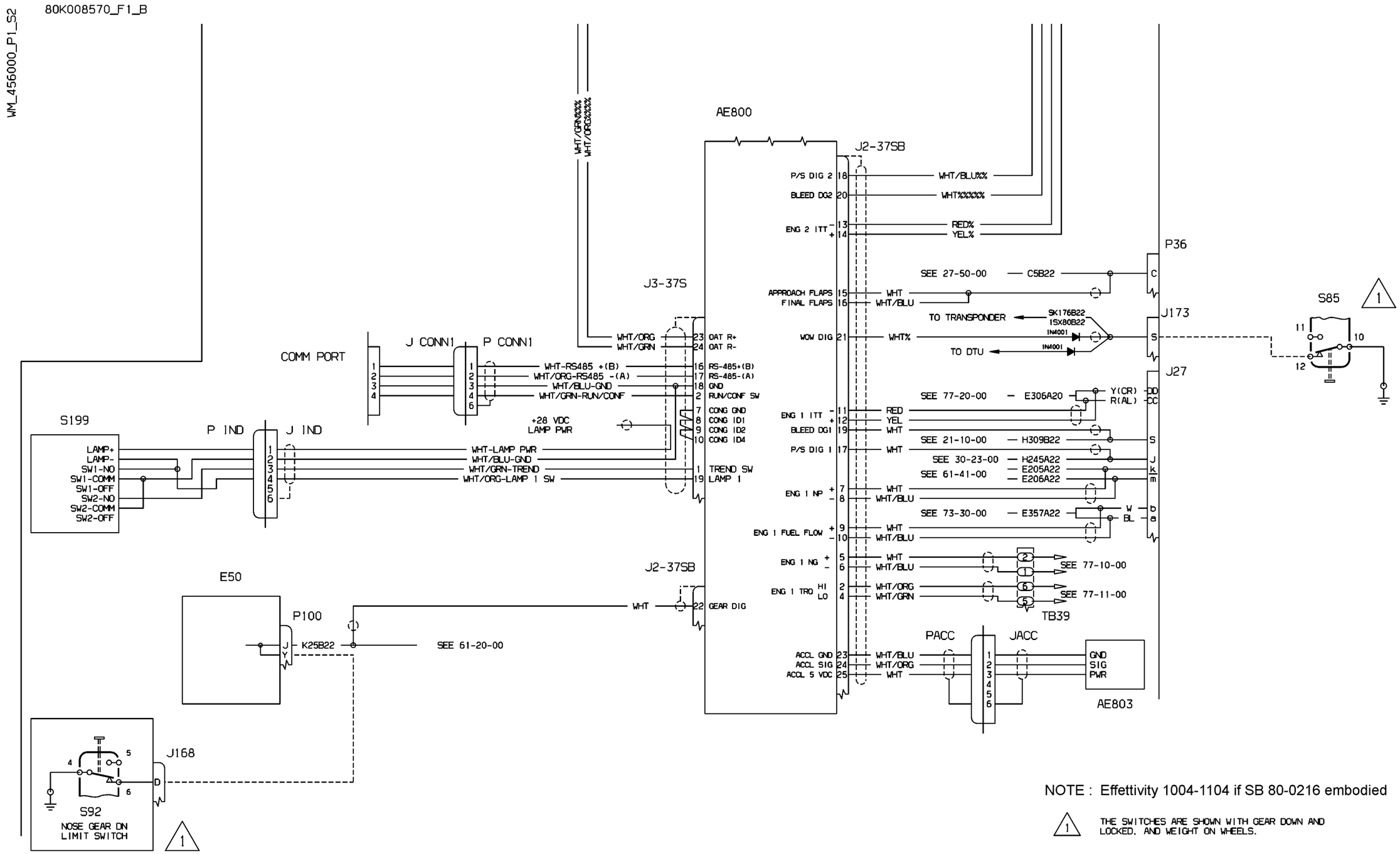
80K008570_F1_B
WM_456000_P1_S2
AE800
J2-37SB
J3-37S
P/S DIG 2 18 WHT/BLU%%
BLEED DG2 20 WHT%%%%%
ENG 2 ITT - 13 RED%
+ 14 YEL%
P36
SEE 27-50-00 C5B22
APPROACH FLAPS 15 WHT
FINAL FLAPS 16 WHT/BLU
TO TRANSPONDER
5K176B22
15X80B22
WOW DIG 21 WHT%
1N4001
TO DTU
J173
S85
J27
SEE 77-20-00 E306A20
Y(CR)
R(AL)
ENG 1 ITT - 11 RED
+ 12 YEL
BLEED DG1 19 WHT
SEE 21-10-00 H309B22
P/S DIG 1 17 WHT
SEE 30-23-00 H245A22
SEE 61-41-00 E205A22
E206A22
ENG 1 NP + 7 WHT
- 8 WHT/BLU
SEE 73-30-00 E357A22
W
BL
ENG 1 FUEL FLOW + 9 WHT
- 10 WHT/BLU
ENG 1 NG + 5 WHT
- 6 WHT/BLU
SEE 77-10-00
ENG 1 TRQ HI 2 WHT/ORG
LO 4 WHT/GRN
SEE 77-11-00
TB39
PACC
JACC
ACCL GND 23 WHT/BLU
ACCL SIG 24 WHT/ORG
ACCL 5 VDC 25 WHT
GND
SIG
PWR
AE803
WHT/GRN%%%
WHT/ORG%%%%
COMM PORT
J CONN1
P CONN1
WHT-RS485 +(B)
WHT/ORG-RS485 -(A)
WHT/BLU-GND
WHT/GRN-RUN/CONF
WHT/ORG 23 OAT R+
WHT/GRN 24 OAT R-
16 RS-485+(B)
17 RS-485-(A)
18 GND
2 RUN/CONF SW
7 CONG GND
8 CONG ID1
9 CONG ID2
10 CONG ID4
+28 VDC
LAMP PWR
S199
P IND
J IND
LAMP+
LAMP-
SW1-NO
SW1-COMM
SW1-OFF
SW2-NO
SW2-COMM
SW2-OFF
WHT-LAMP PWR
WHT/BLU-GND
WHT/GRN-TREND
WHT/ORG-LAMP 1 SW
1 TREND SW
19 LAMP 1
E50
P100
K25B22
SEE 61-20-00
WHT 22 GEAR DIG
J168
S92
NOSE GEAR DN
LIMIT SWITCH
1
NOTE : Effettivity 1004-1104 if SB 80-0216 embodied
1 THE SWITCHES ARE SHOWN WITH GEAR DOWN AND LOCKED, AND WEIGHT ON WHEELS.

CHAPTER 52 - CENTRAL MAINTENANCE SYSTEM
LIST OF EFFECTIVE PAGES

| CHAPTER SECTION SUBJECT | PAGE | SHEET | DATE |
|---|---|---|---|
| 52 - LOEP | 1 | | Oct. 30/09 |
| | 2 | | Oct. 30/09 |
| 52 - TOC | 1 | | Oct. 30/09 |
| | 2 | | Oct. 30/09 |
| 52-70-00 | 1 | | Oct. 30/09 |

INTENTIONALLY LEFT BLANK

CHAPTER 52 - CENTRAL MAINTENANCE SYSTEM
TABLE OF CONTENTS


| SUBJECT | CHAPTER SECTION SUBJECT | PAGE | SHEET |
|---|---|---|---|
| CMS/PROPELLERS | | | |
| Annunciator Cabin/baggage Doors | 52-70-00 | 1 | |

INTENTIONALLY LEFT BLANK

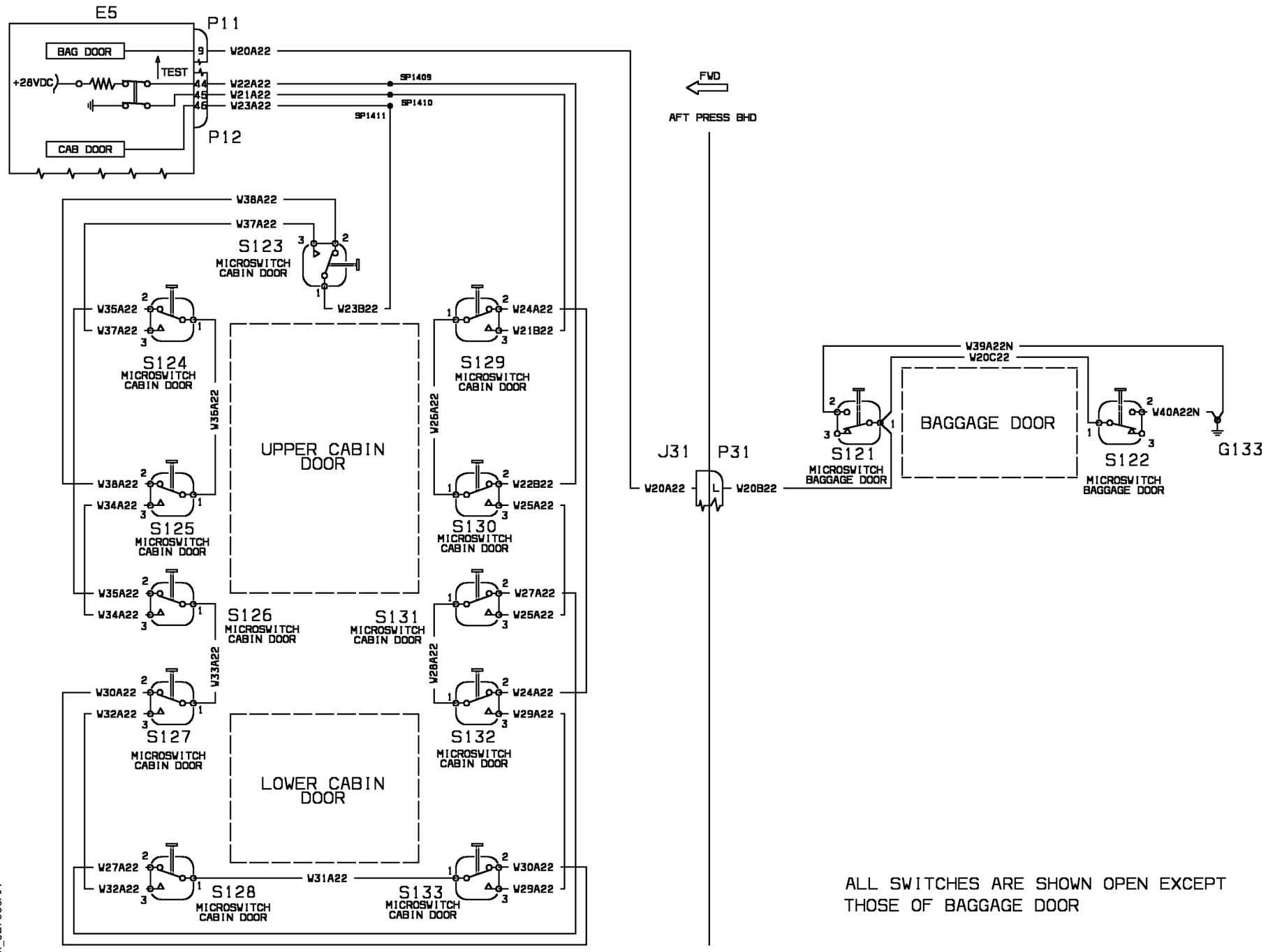


ALL SWITCHES ARE SHOWN OPEN EXCEPT
THOSE OF BAGGAGE DOOR

WM_527000AA

CHAPTER 61 - PROPELLERS/PROPULSION
LIST OF EFFECTIVE PAGES

| CHAPTER SECTION SUBJECT | PAGE | SHEET | DATE |
|---|---|---|---|
| 61 - LOEP | 1 | | Oct. 30/09 |
| | 2 | | Oct. 30/09 |
| 61 - TOC | 1 | | Oct. 30/09 |
| | 2 | | Oct. 30/09 |
| 61-20-00 | 1 | 1 | Oct. 30/09 |
| 61-20-00 | 1 | 2 | Oct. 30/09 |
| 61-20-00 | 2 | 1 | Oct. 30/09 |
| 61-20-00 | 2 | 2 | Oct. 30/09 |
| 61-21-00 | 1 | | Oct. 30/09 |
| 61-21-00 | 2 | | Oct. 30/09 |
| 61-41-00 | 1 | | Oct. 30/09 |
| 61-41-00 | 2 | | Oct. 30/09 |

INTENTIONALLY LEFT BLANK

CHAPTER 61 - PROPELLERS/PROPULSION
TABLE OF CONTENTS


| SUBJECT | CHAPTER SECTION SUBJECT | PAGE | SHEET |
|---|---|---|---|
| CONTROLLING | | | |
| Autofeather Electrical System | 61-20-00 | 1 | 1 |
| Autofeather Electrical System | 61-20-00 | 1 | 2 |
| Autofeather Electrical System | 61-20-00 | 2 | 1 |
| Autofeather Electrical System | 61-20-00 | 2 | 2 |
| Propeller Syncropher System (Optional) | 61-21-00 | 1 | |
| Propeller Syncropher System (Optional) | 61-21-00 | 2 | |
| INDICATING | | | |
| Propeller RPM, Low Pitch - Electrical System | 61-41-00 | 1 | |
| Propeller RPM, Low Pitch - Electrical System | 61-41-00 | 2 | |

INTENTIONALLY LEFT BLANK

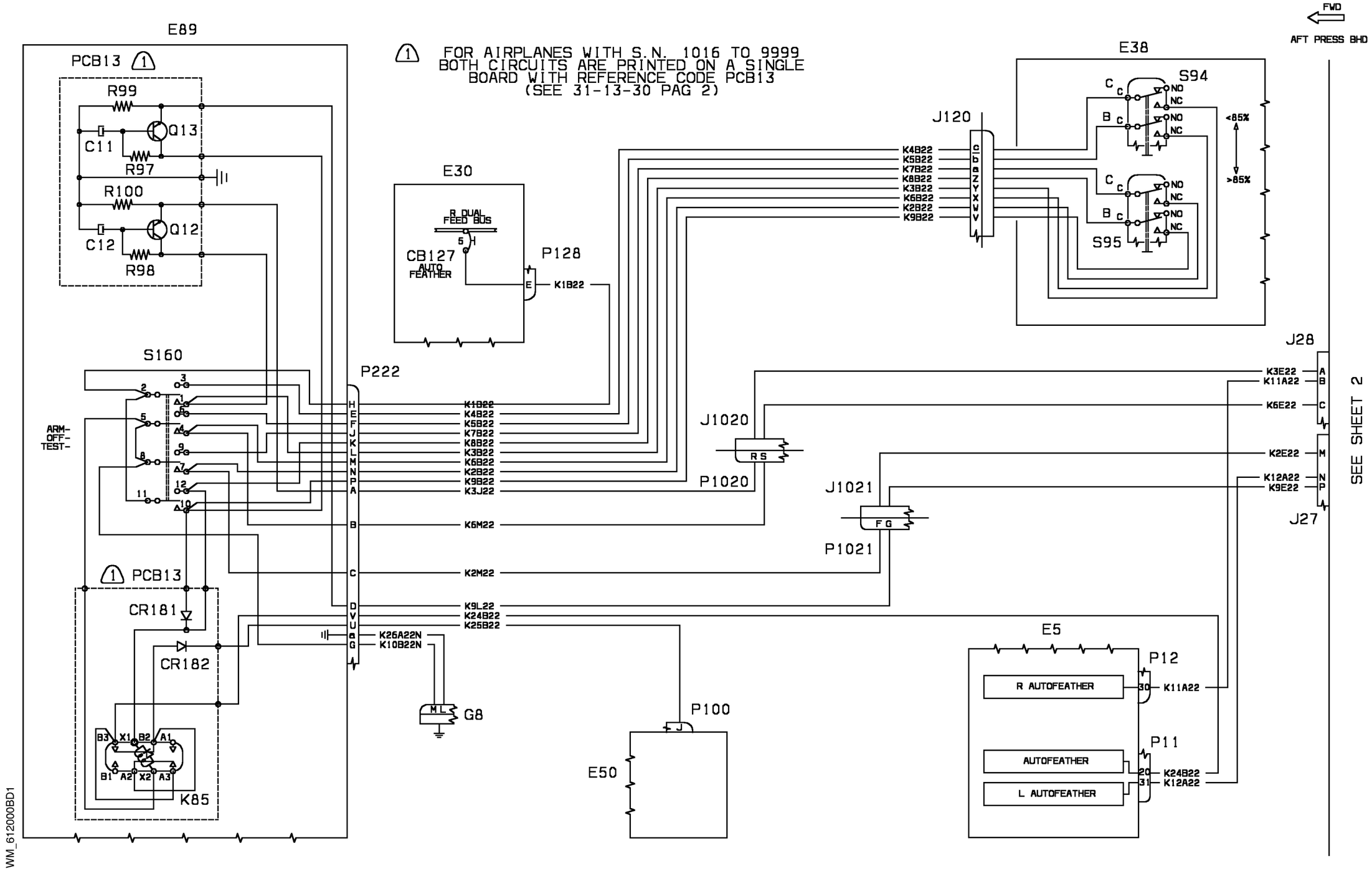


| EFFECTIVITY: | CONTROLLING |
|---|---|
| 1004-1033 | Autofeather Electrical System |

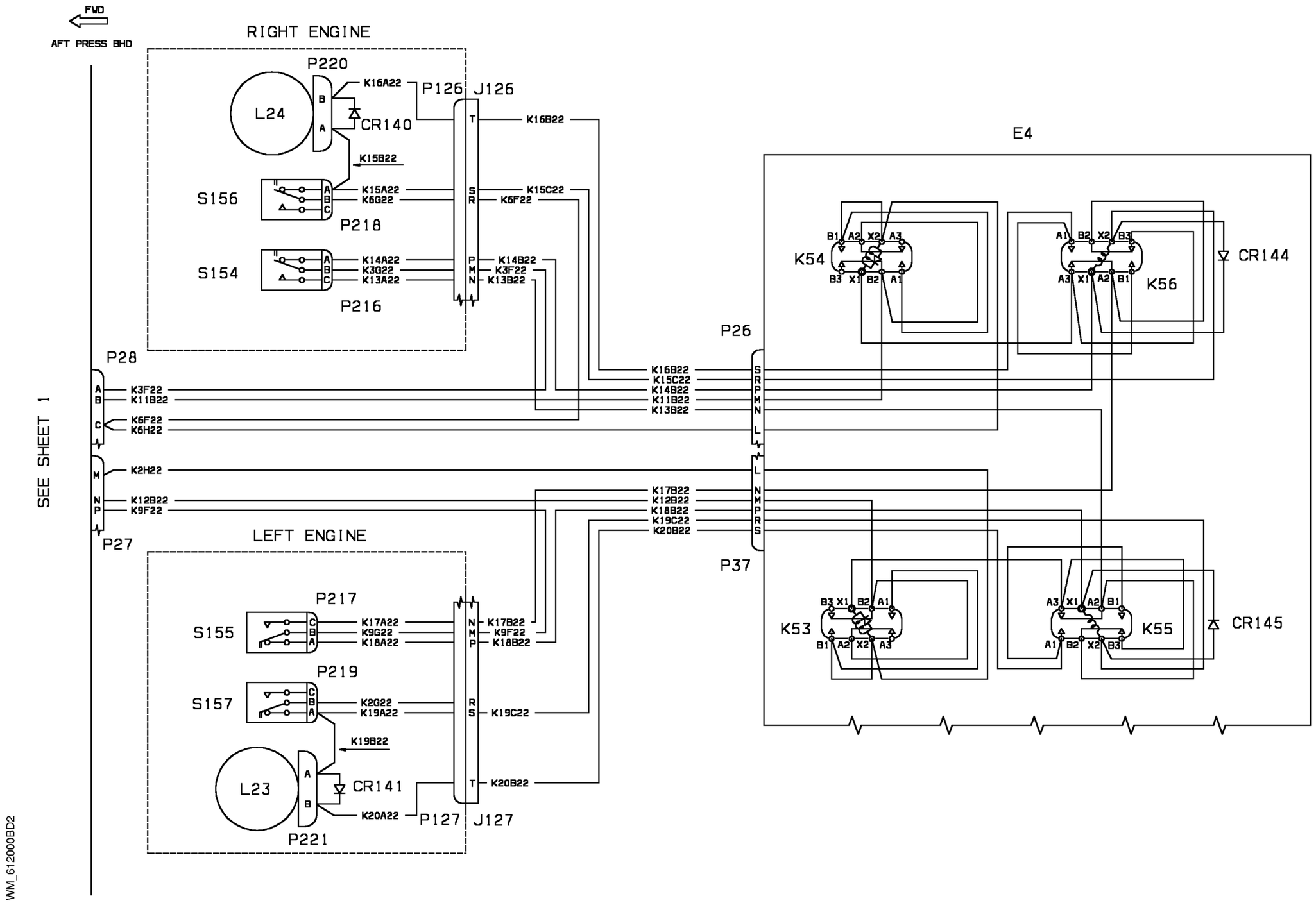


WM_612000BD2

| EFFECTIVITY: | CONTROLLING |
|---|---|
| 1004-1033 | Autofeather Electrical System |

**61-20-00**

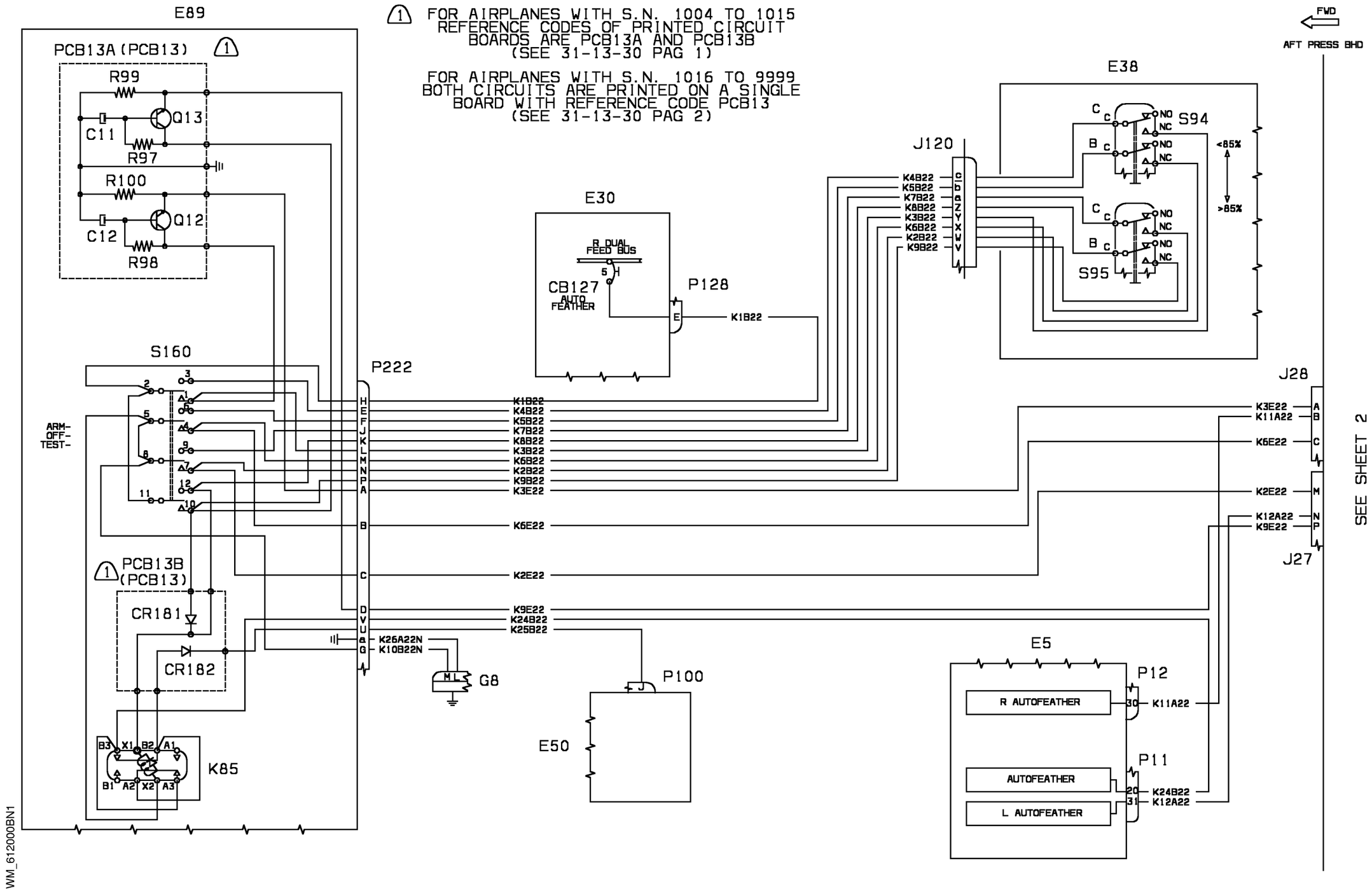
1 FOR AIRPLANES WITH S.N. 1004 TO 1015 REFERENCE CODES OF PRINTED CIRCUIT BOARDS ARE PCB13A AND PCB13B (SEE 31-13-30 PAG 1)
FOR AIRPLANES WITH S.N. 1016 TO 9999 BOTH CIRCUITS ARE PRINTED ON A SINGLE BOARD WITH REFERENCE CODE PCB13 (SEE 31-13-30 PAG 2)
FWD
AFT PRESS BHD
E89
PCB13A (PCB13)
R99
Q13
C11
R97
R100
Q12
C12
R98
S160
ARM-
OFF-
TEST-
P222
E30
R DUAL FEED BUS
CB127
AUTO FEATHER
P128
K1B22
E38
J120
S94
S95
<85%
>85%
K4B22
K5B22
K7B22
K8B22
K3B22
K6B22
K2B22
K9B22
K3E22
K6E22
K2E22
K9E22
K24B22
K25B22
K26A22N
K10B22N
J28
K11A22
K12A22
J27
SHEET 2
PCB13B (PCB13)
CR181
CR182
K85
G8
E50
P100
E5
P12
R AUTOFEATHER
P11
AUTOFEATHER
L AUTOFEATHER
WM_612000BN1

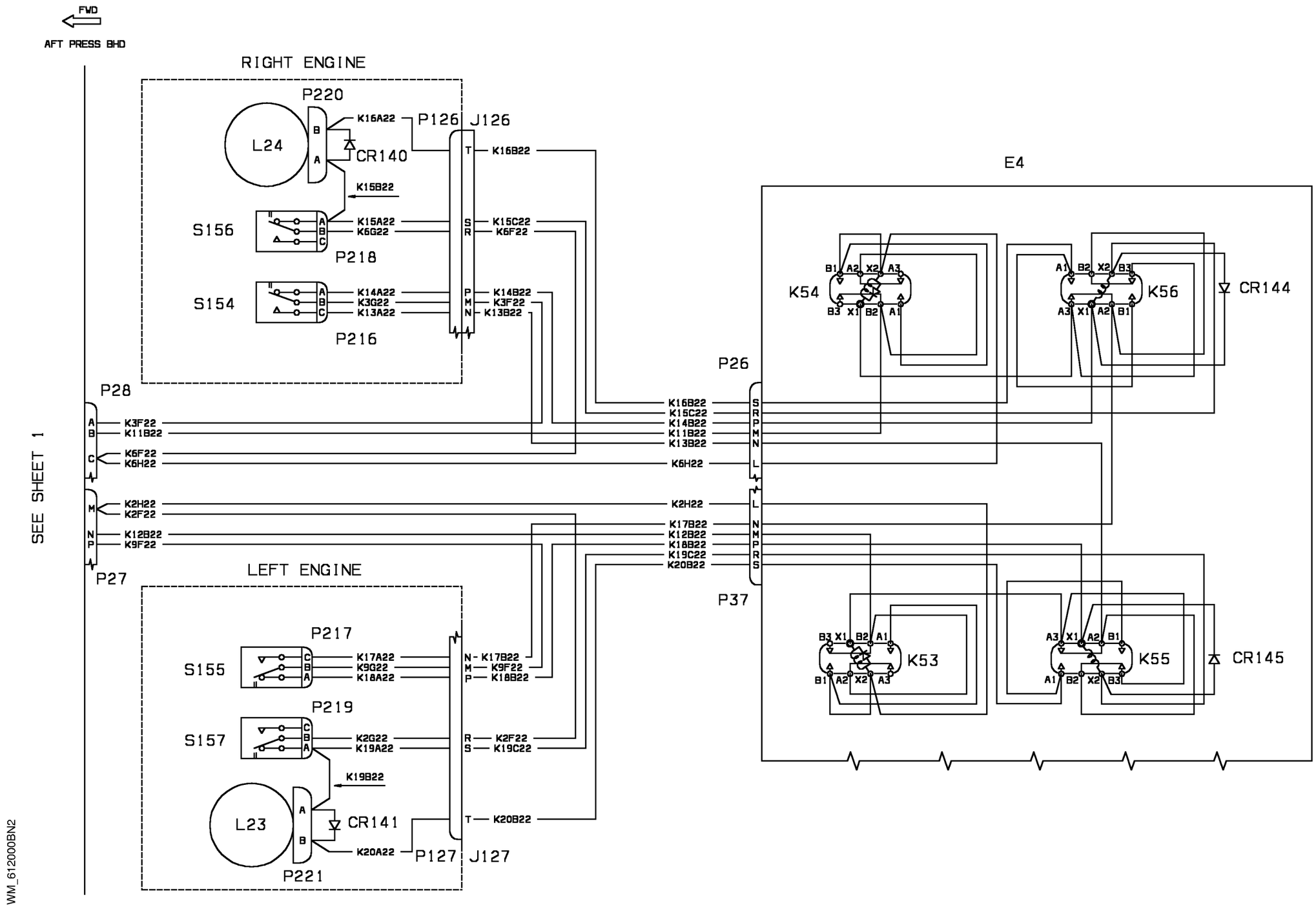


| EFFECTIVITY: | CONTROLLING |
|---|---|
| 1034-1104 | Autofeather Electrical System |

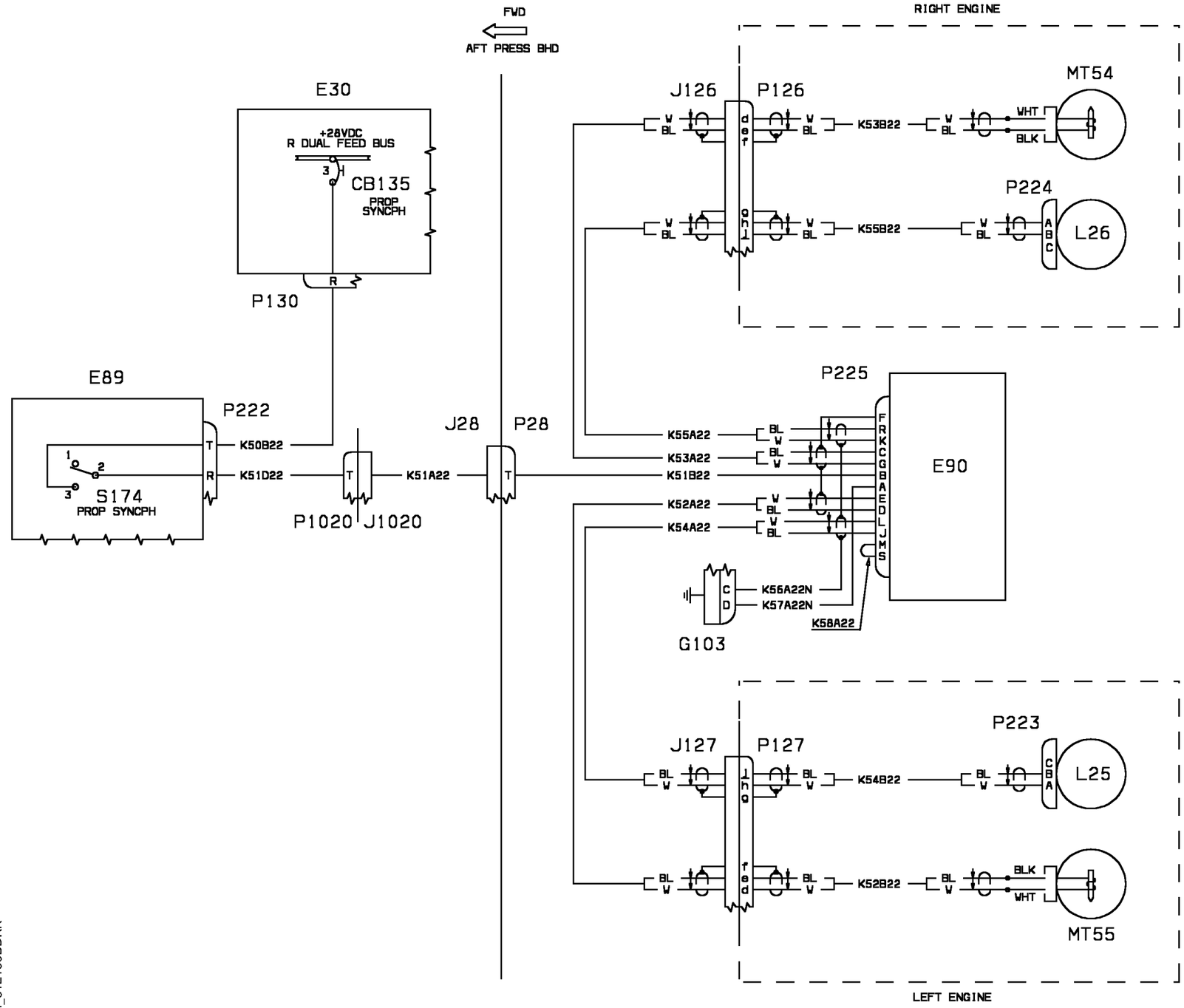


WM_612100BDKK

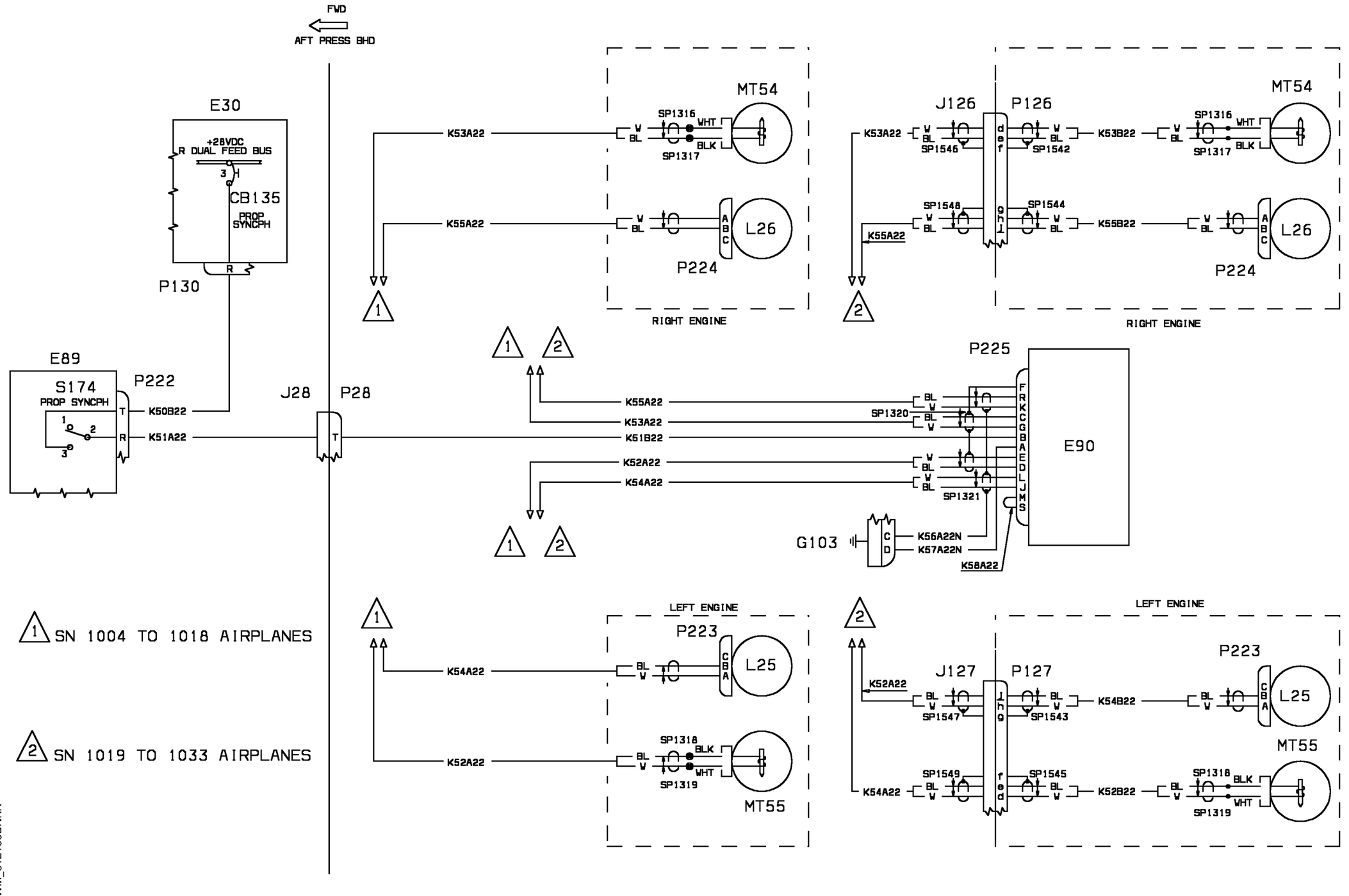


1 SN 1004 TO 1018 AIRPLANES

2 SN 1019 TO 1033 AIRPLANES

WM_612100BNKK

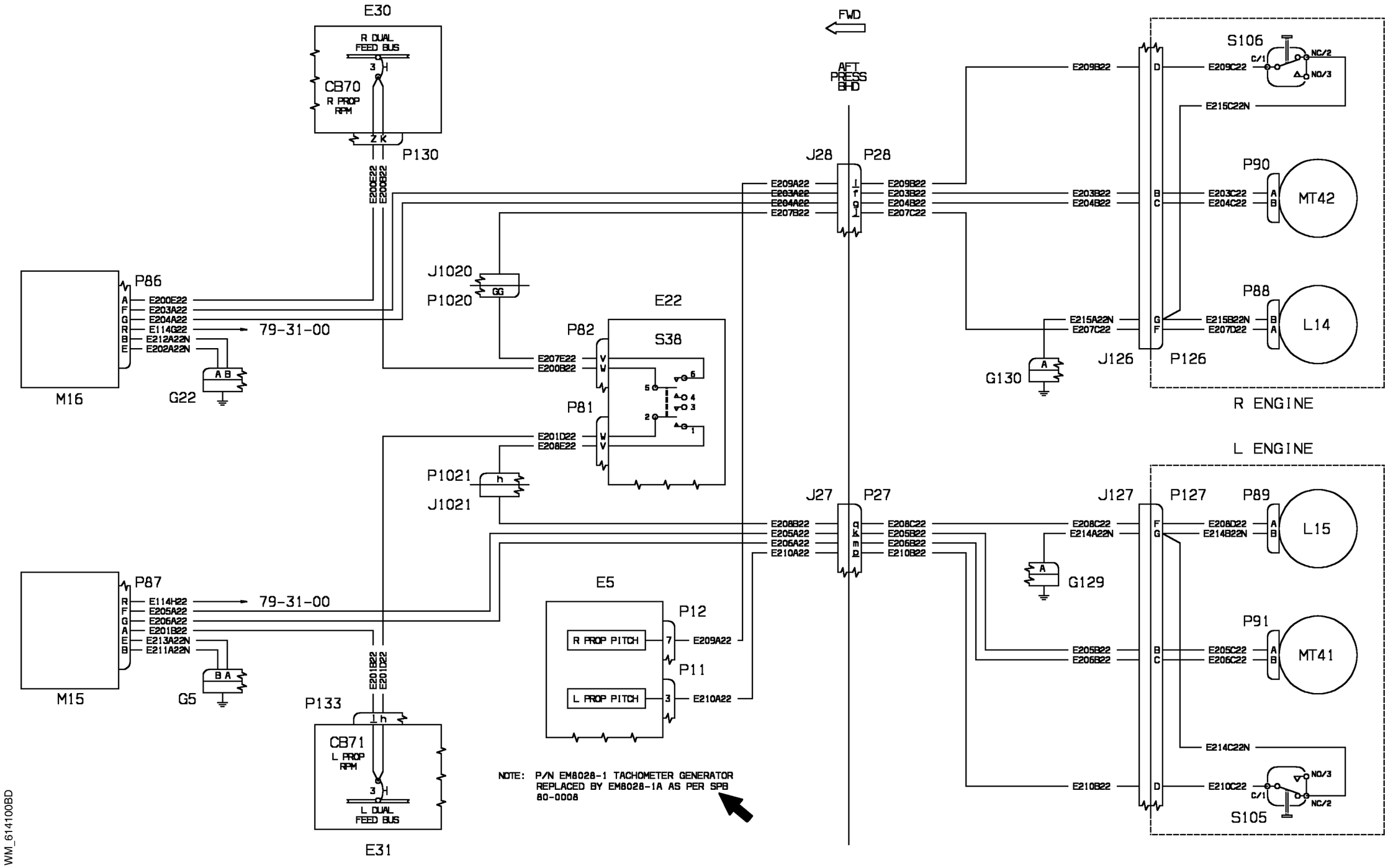
E30
R DUAL FEED BUS
3
CB70
R PROP RPM
Z K
P130
E200E22
E200B22
FWD
AFT PRESS BHD
J28
P28
E209A22
E203A22
E204A22
E207B22
E209B22
E203B22
E204B22
E207C22
E209B22
E209C22
E215C22N
S106
C/1
NC/2
NO/3
P90
MT42
E203C22
E204C22
P88
L14
E215B22N
E207D22
E215A22N
E207C22
G130
J126
P126
R ENGINE
P86
E200E22
E203A22
E204A22
E114G22
E212A22N
E202A22N
79-31-00
M16
G22
J1020
P1020
GG
E22
P82
S38
E207E22
E200B22
P81
E201D22
E208E22
P1021
J1021
h
L ENGINE
J27
P27
E208B22
E205A22
E206A22
E210A22
E208C22
E205B22
E206B22
E210B22
E208C22
E214A22N
G129
J127
P127
P89
L15
E208D22
E214B22N
P91
MT41
E205C22
E206C22
E205B22
E206B22
E214C22N
E210B22
E210C22
NO/3
NC/2
S105
P87
E114H22
E205A22
E206A22
E201B22
E213A22N
E211A22N
79-31-00
M15
G5
E5
P12
R PROP PITCH
7
E209A22
P11
L PROP PITCH
3
E210A22
P133
CB71
L PROP RPM
L DUAL FEED BUS
E31
NOTE: P/N EM8028-1 TACHOMETER GENERATOR REPLACED BY EM8028-1A AS PER SPB 80-0008
WM_614100BD

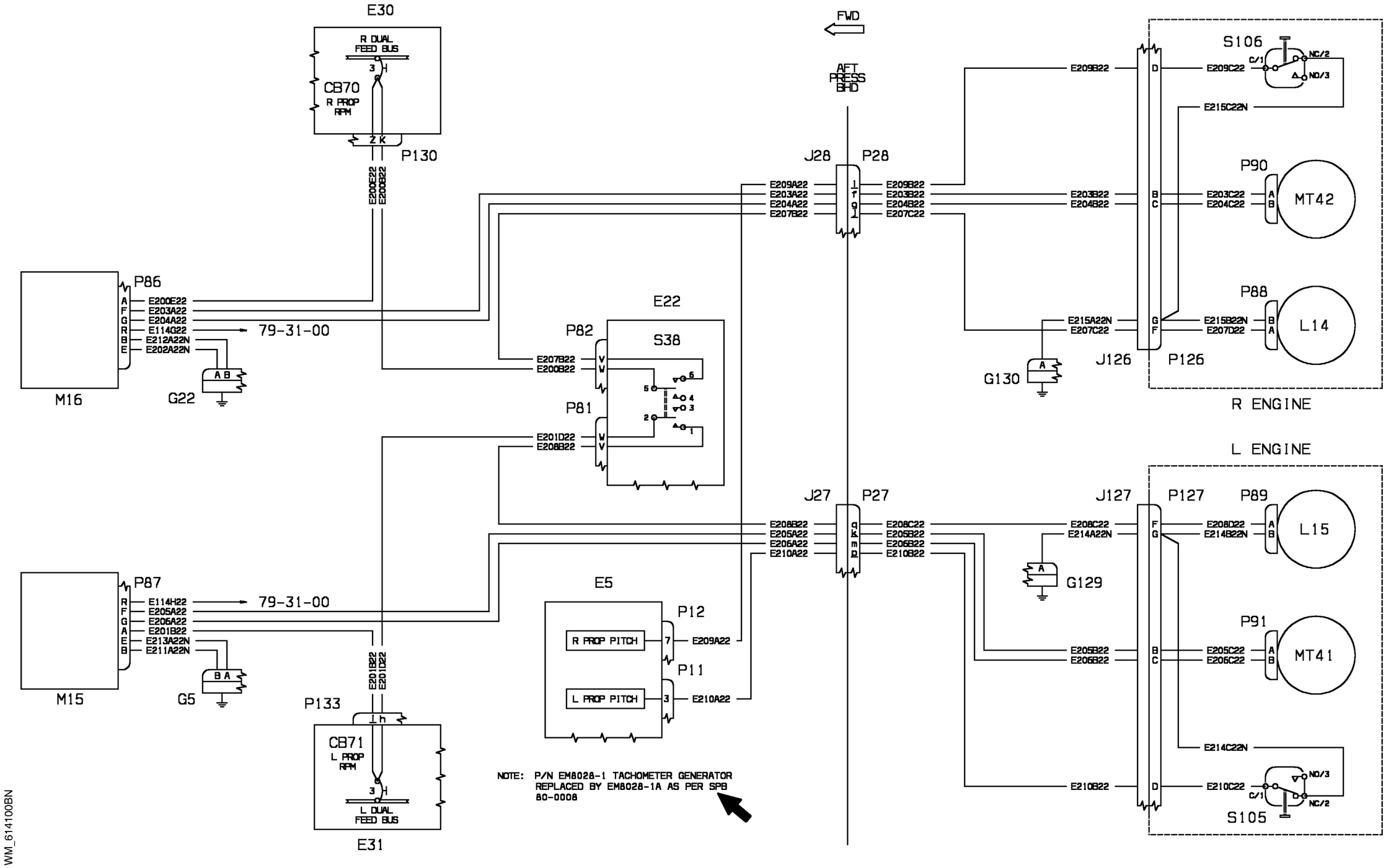
E30
R DUAL FEED BUS
3
H
CB70
R PROP RPM
Z K
P130
E200E22
E200B22
FWD
AFT PRESS BHD
J28
P28
E209A22
E203A22
E204A22
E207B22
E209B22
E203B22
E204B22
E207C22
S106
C/1
NC/2
NO/3
E209C22
E215C22N
P90
MT42
E203C22
E204C22
P88
L14
E215B22N
E207D22
E215A22N
E207C22
G130
J126
P126
R ENGINE
P86
A E200E22
F E203A22
G E204A22
R E114G22
B E212A22N
E E202A22N
79-31-00
M16
G22
A B
E22
P82
S38
E207B22
E200B22
P81
E201D22
E208B22
L ENGINE
J27
P27
E208B22
E205A22
E206A22
E210A22
E208C22
E205B22
E206B22
E210B22
E208C22
E214A22N
G129
J127
P127
P89
L15
E208D22
E214B22N
P91
MT41
E205C22
E206C22
E214C22N
E210B22
E210C22
S105
P87
R E114H22
F E205A22
G E206A22
A E201B22
E E213A22N
B E211A22N
79-31-00
M15
G5
B A
E5
P12
R PROP PITCH
7
E209A22
P11
L PROP PITCH
3
E210A22
P133
E201B22
E201D22
CB71
L PROP RPM
3
H
L DUAL FEED BUS
E31
NOTE: P/N EM8028-1 TACHOMETER GENERATOR REPLACED BY EM8028-1A AS PER SPB 80-0008
WM_614100BN

CHAPTER 73 - PROPELLERS/PROPULSION
LIST OF EFFECTIVE PAGES

| CHAPTER SECTION SUBJECT | PAGE | SHEET | DATE |
|---|---|---|---|
| 73 - LOEP | 1 | | Oct. 30/09 |
| | 2 | | Oct. 30/09 |
| 73 - TOC | 1 | | Oct. 30/09 |
| | 2 | | Oct. 30/09 |
| 73-30-00 | 1 | | Oct. 30/09 |
| 73-31-00 | 1 | | Oct. 30/09 |

INTENTIONALLY LEFT BLANK

CHAPTER 73 - PROPELLERS/PROPULSION
TABLE OF CONTENTS


| SUBJECT | CHAPTER SECTION SUBJECT | PAGE | SHEET |
|---|---|---|---|
| INDICATING | | | |
| Fuel Indicating: Pressure, Flow, Filter Impending | 73-30-00 | 1 | |
| Automatic Fuel Flow Calculation (Opt.) | 73-31-00 | 1 | |

INTENTIONALLY LEFT BLANK

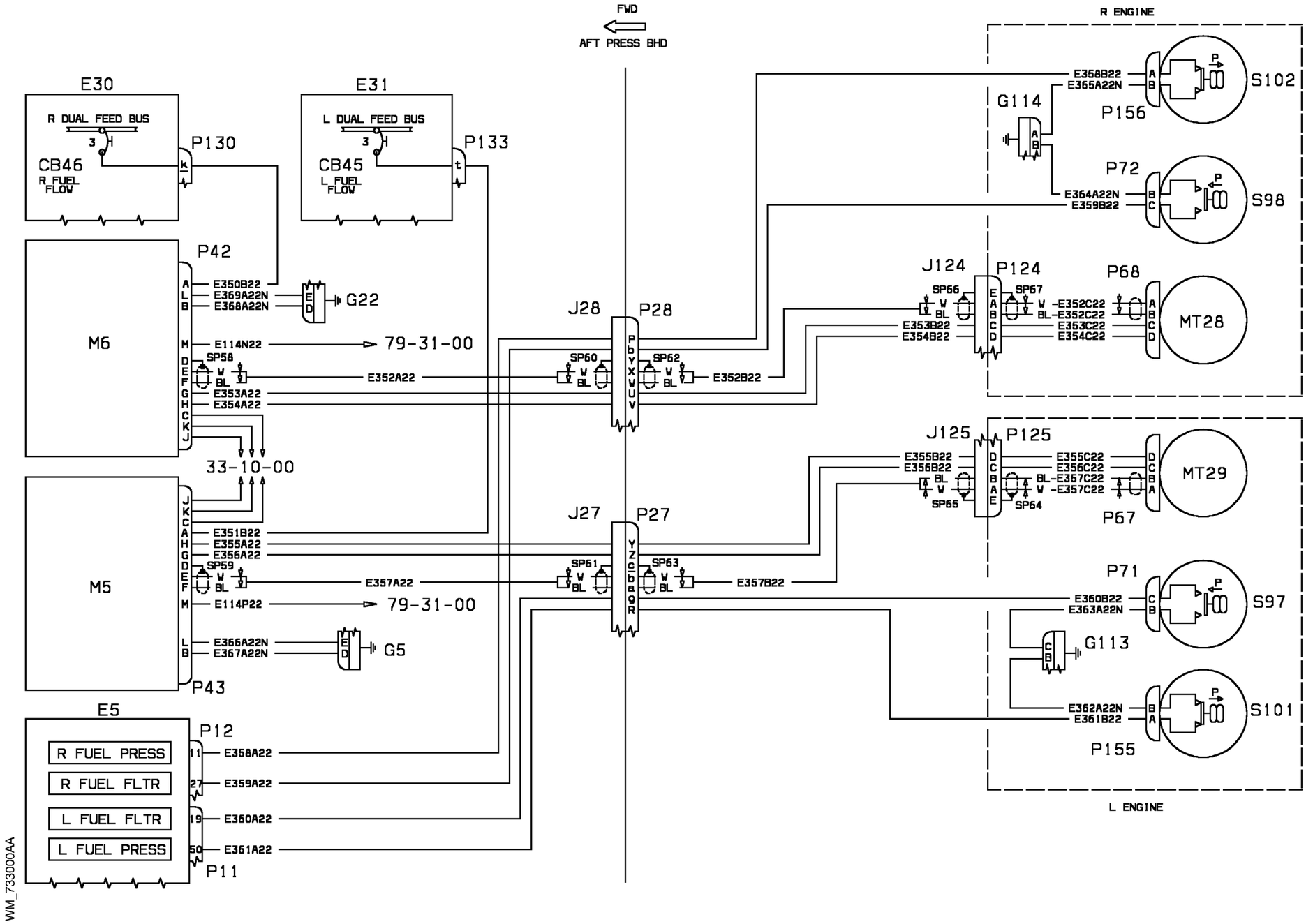


| EFFECTIVITY: | INDICATING<br>Fuel Indicating: Pressure, Flow, Filter Impending |
|---|---|

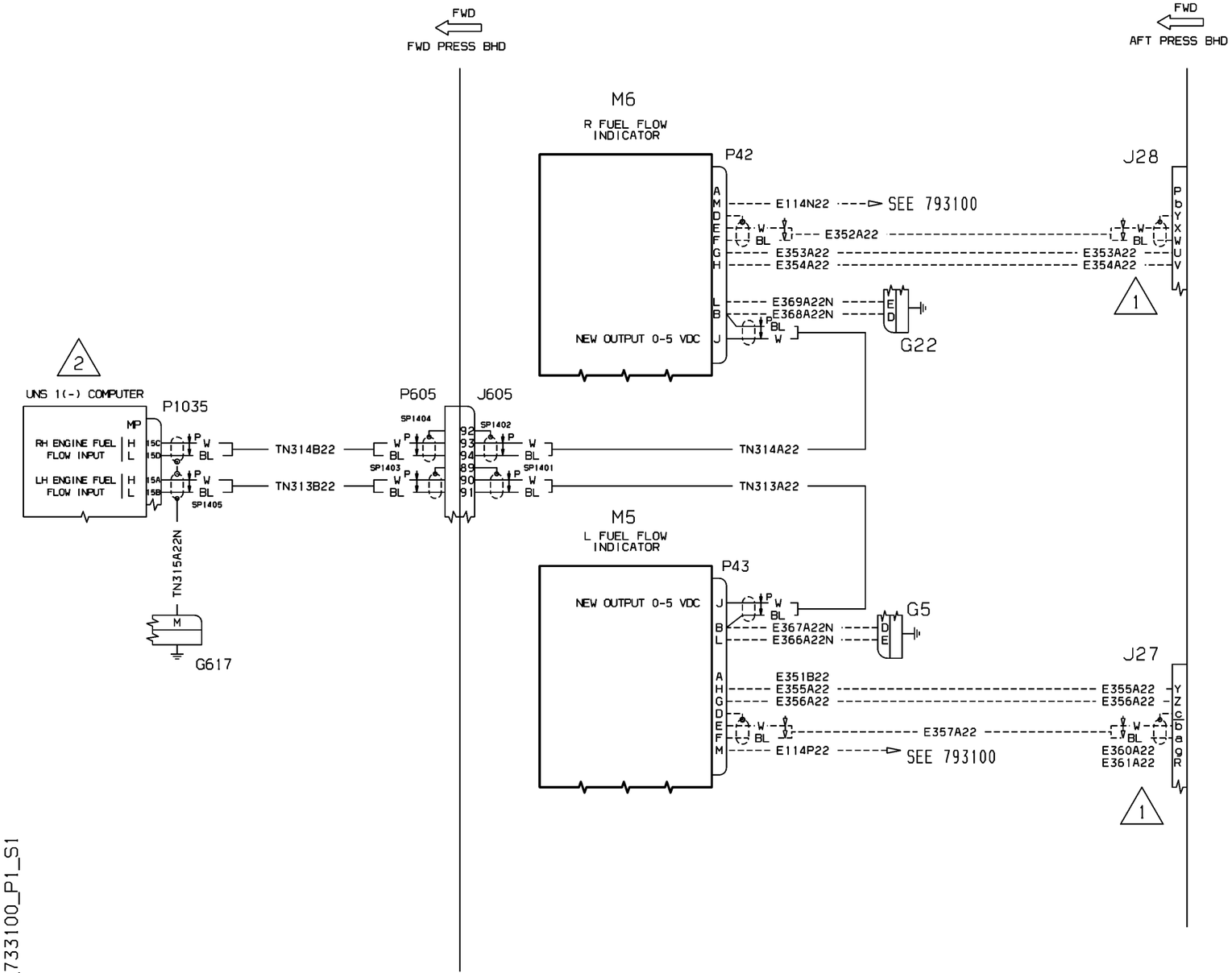


1 BASIC WIRES SEE 733000

2 MID PLUG CONNECTIONS SHOWN ARE APPLICABLE TO UNS 1D, UNS 1K AND ALSO UNS 1L.

| EFFECTIVITY: | INDICATING<br>Automatic Fuel Flow Calculation (Opt.) |
|---|---|

CHAPTER 77 - ENGINE INDICATING
LIST OF EFFECTIVE PAGES

| CHAPTER SECTION SUBJECT | PAGE | SHEET | DATE |
|---|---|---|---|
| 77 - LOEP | 1 | | Oct. 30/09 |
| | 2 | | Oct. 30/09 |
| 77 - TOC | 1 | | Oct. 30/09 |
| | 2 | | Oct. 30/09 |
| 77-10-00 | 1 | | Oct. 30/09 |
| 77-11-00 | 1 | | Oct. 30/09 |
| 77-11-00 | 2 | | Oct. 30/09 |
| 77-20-00 | 1 | | Oct. 30/09 |

INTENTIONALLY LEFT BLANK

CHAPTER 77 - ENGINE INDICATING
TABLE OF CONTENTS


| SUBJECT | CHAPTER SECTION SUBJECT | PAGE | SHEET |
|---|---|---|---|
| POWER | | | |
| Engine RPM | 77-10-00 | 1 | |
| Engine Torque | 77-11-00 | 1 | |
| Engine Torque | 77-11-00 | 2 | |
| TEMPERATURE | | | |
| Engine Temperature | 77-20-00 | 1 | |

INTENTIONALLY LEFT BLANK

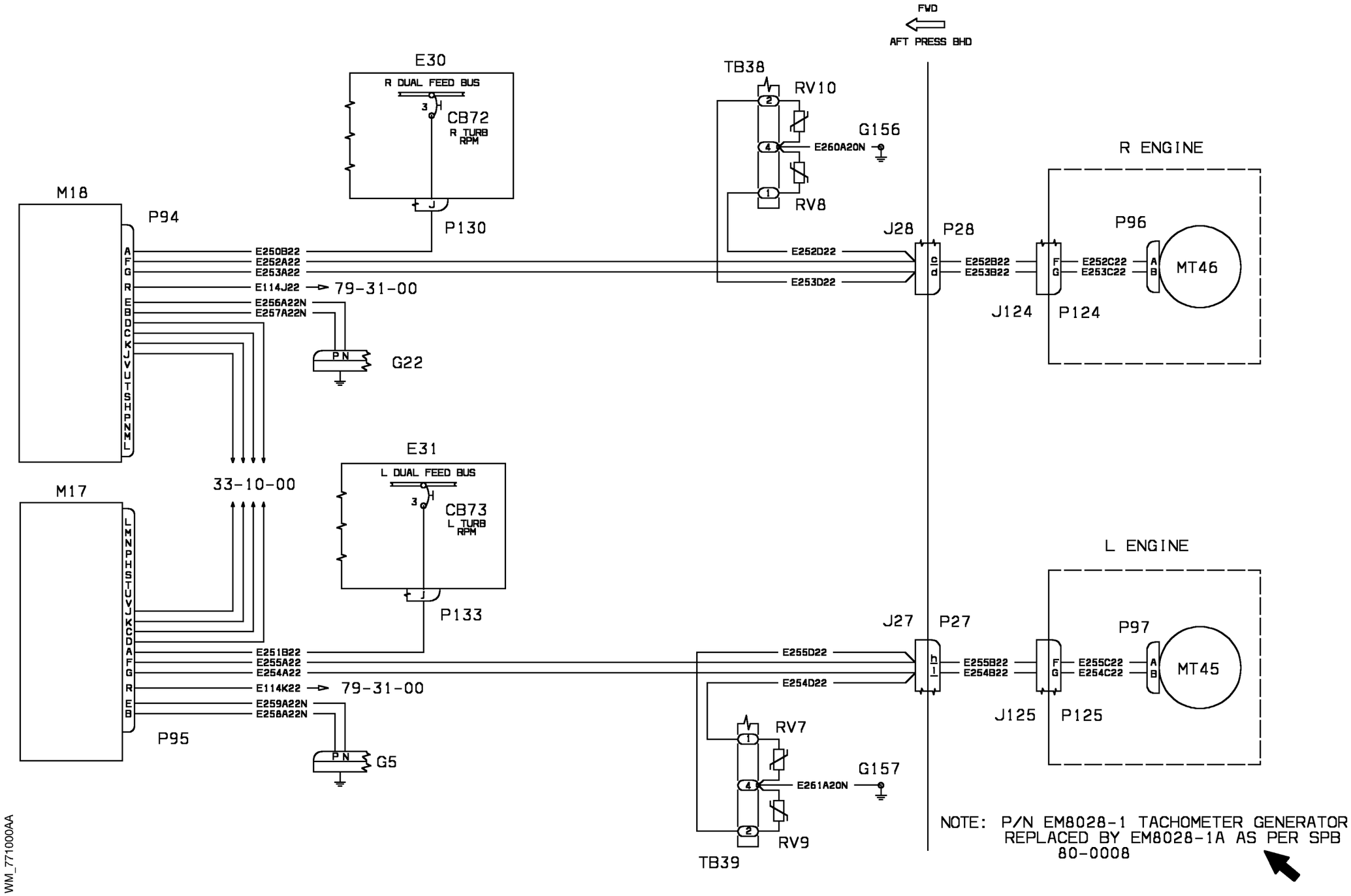


WM_771000AA

| EFFECTIVITY: | POWER<br>Engine RPM |
|---|---|

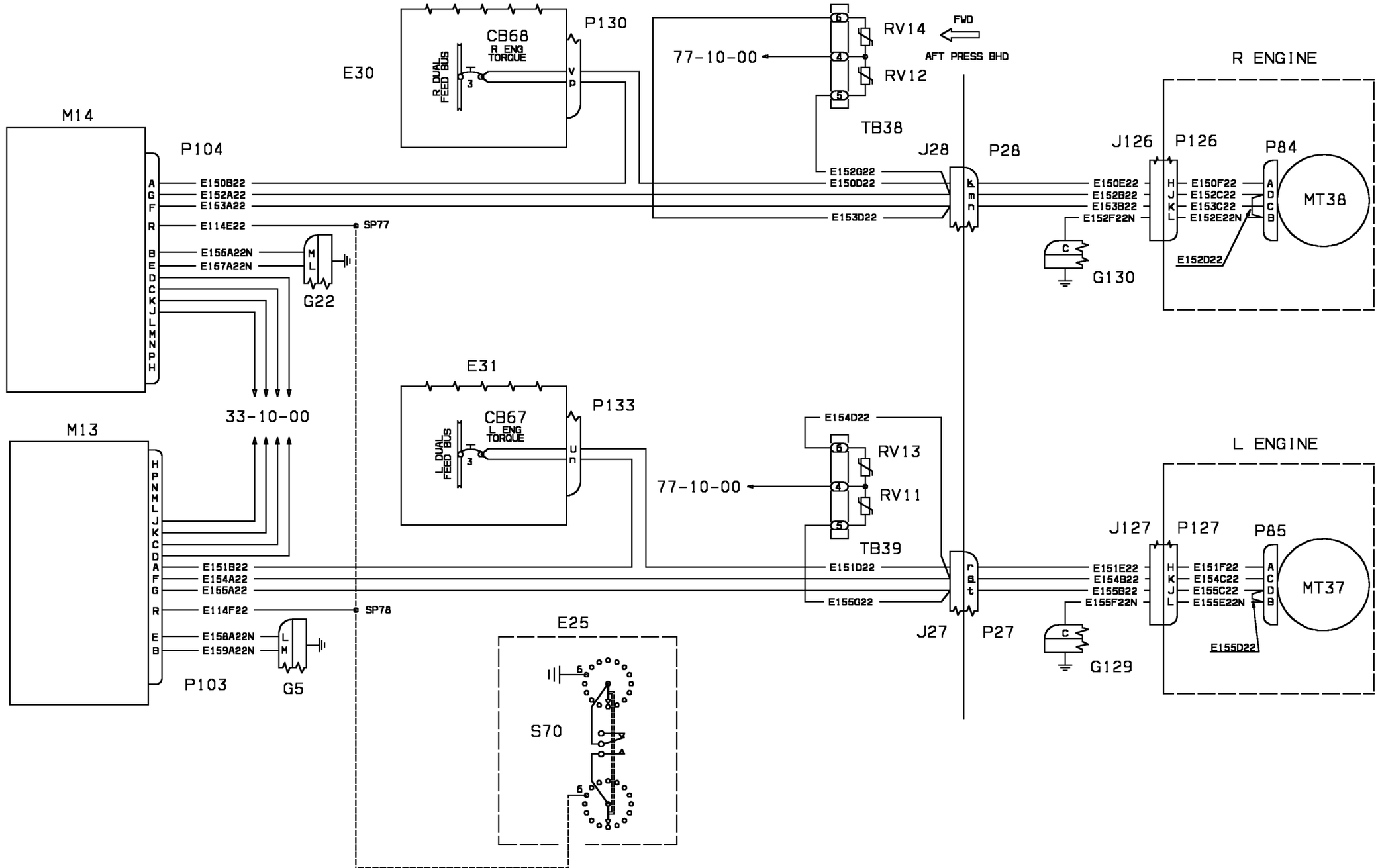
M14
P104
A
G
F
R
B
E
D
C
K
J
L
M
N
P
H
E150B22
E152A22
E153A22
E114E22
SP77
E156A22N
E157A22N
M
L
G22
33-10-00
M13
H
P
N
M
L
J
K
C
D
A
F
G
R
E
B
E151B22
E154A22
E155A22
E114F22
SP78
E158A22N
E159A22N
L
M
P103
G5
E30
CB68
R ENG
TORQUE
R DUAL
FEED BUS
H
3
V
P
P130
77-10-00
6
4
5
RV14
RV12
FWD
AFT PRESS BHD
TB38
J28
P28
k
m
n
E152G22
E150D22
E153D22
R ENGINE
J126
P126
P84
E150E22
E152B22
E153B22
E152F22N
H
J
K
L
E150F22
E152C22
E153C22
E152E22N
A
D
C
B
MT38
E152D22
C
G130
E31
CB67
L ENG
TORQUE
L DUAL
FEED BUS
P133
E154D22
RV13
RV11
TB39
r
B
t
J27
P27
E151D22
E154B22
E155B22
E155F22N
E155G22
L ENGINE
J127
P127
P85
E151F22
E154C22
E155C22
E155E22N
MT37
E155D22
G129
E25
S70
WM_771100AK

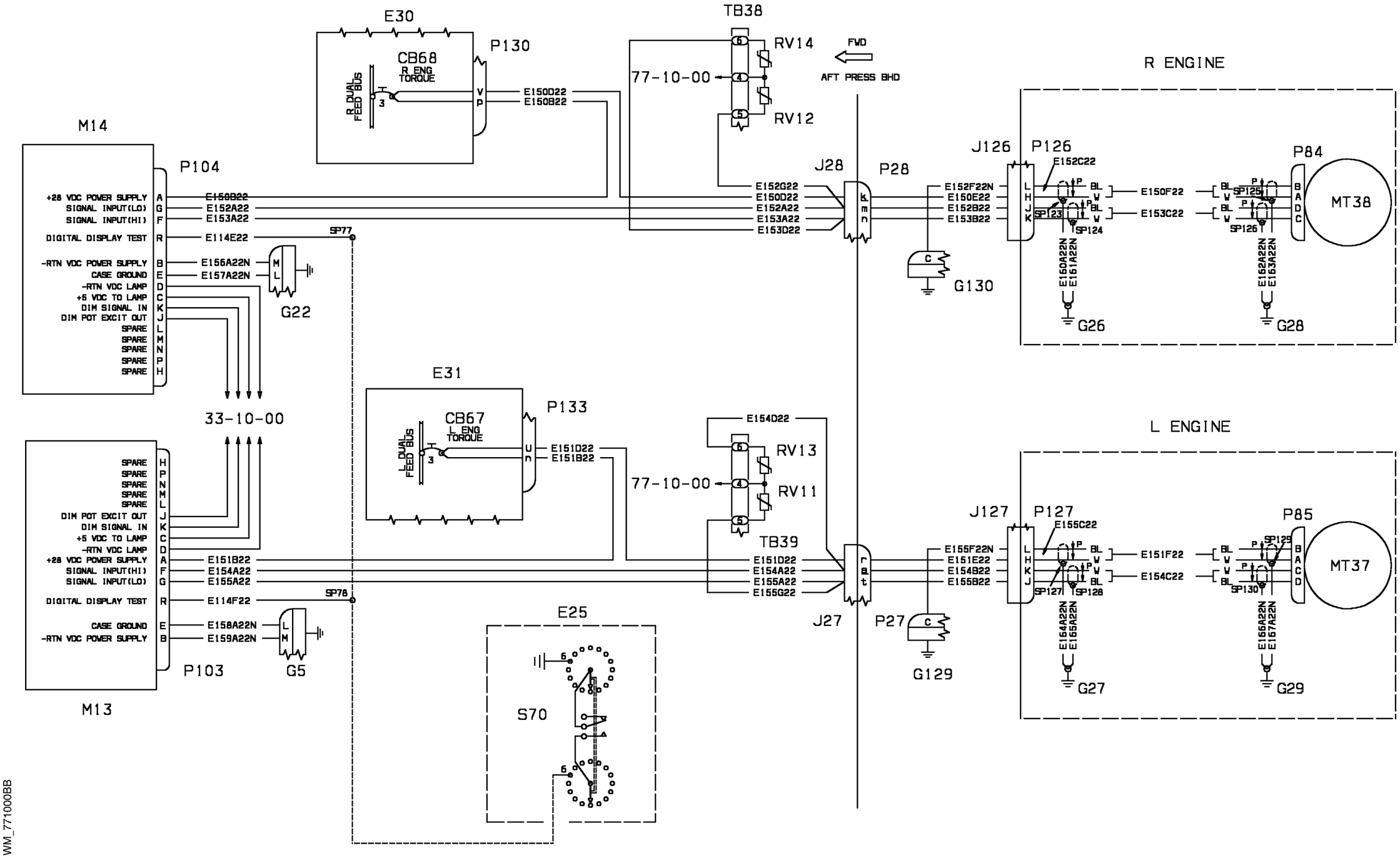
E30
CB68
R ENG TORQUE
R DUAL FEED BUS
P130
E150D22
E150B22
TB38
RV14
RV12
77-10-00
FWD
AFT PRESS BHD
R ENGINE
M14
P104
+28 VDC POWER SUPPLY
SIGNAL INPUT(LO)
SIGNAL INPUT(HI)
DIGITAL DISPLAY TEST
-RTN VDC POWER SUPPLY
CASE GROUND
-RTN VDC LAMP
+5 VDC TO LAMP
DIM SIGNAL IN
DIM POT EXCIT OUT
SPARE
E150B22
E152A22
E153A22
E114E22
E156A22N
E157A22N
SP77
G22
33-10-00
E152G22
E150D22
E152A22
E153A22
E153D22
J28
P28
E152F22N
E150E22
E152B22
E153B22
G130
J126
P126
E152C22
E150F22
E153C22
SP123
SP124
E150A22N
E161A22N
G26
P84
MT38
SP125
SP126
E162A22N
E163A22N
G28
E31
CB67
L ENG TORQUE
L DUAL FEED BUS
P133
E151D22
E151B22
E154D22
RV13
RV11
77-10-00
L ENGINE
M13
P103
SPARE
DIM POT EXCIT OUT
DIM SIGNAL IN
+5 VDC TO LAMP
-RTN VDC LAMP
+28 VDC POWER SUPPLY
SIGNAL INPUT(HI)
SIGNAL INPUT(LO)
DIGITAL DISPLAY TEST
CASE GROUND
-RTN VDC POWER SUPPLY
E151B22
E154A22
E155A22
E114F22
E158A22N
E159A22N
SP78
G5
E25
S70
TB39
J27
P27
E155F22N
E151E22
E154B22
E155B22
G129
J127
P127
E155C22
E151F22
E154C22
SP127
SP128
E164A22N
E165A22N
G27
P85
MT37
SP129
SP130
E166A22N
E167A22N
G29

WM_771000BB

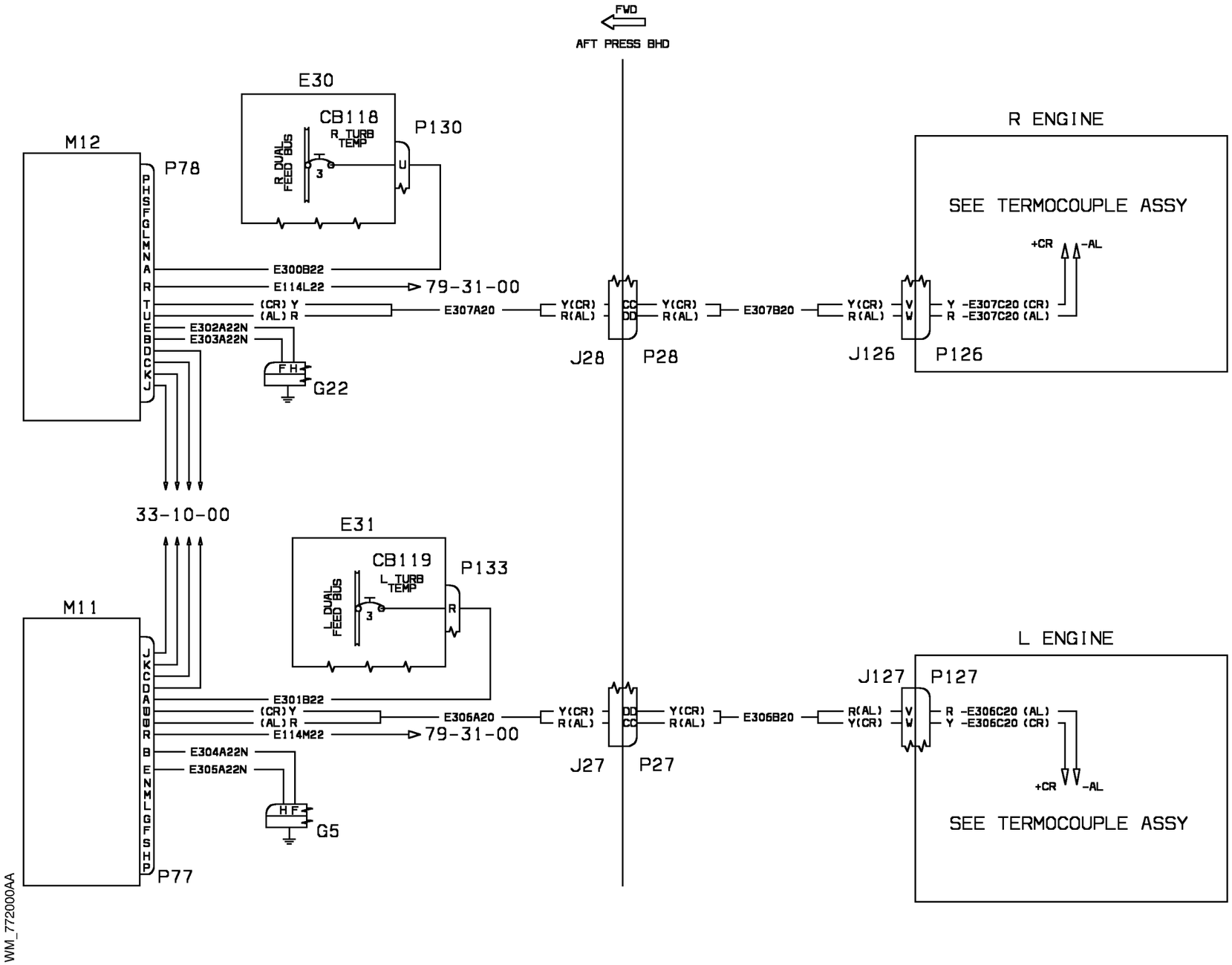


| EFFECTIVITY: | TEMPERATURE<br>Engine Temperature |
|---|---|

CHAPTER 79 - OIL
LIST OF EFFECTIVE PAGES

| CHAPTER SECTION SUBJECT | PAGE | SHEET | DATE |
|---|---|---|---|
| 79 - LOEP | 1 | | June 30/10 |
| | 2 | | June 30/10 |
| 79 - TOC | 1 | | June 30/10 |
| | 2 | | June 30/10 |
| 79-20-00 | 1 | | Oct. 30/09 |
| 79-30-00 | 1 | | June 30/10 |
| 79-30-00 | 2 | | June 30/10 |
| 79-31-00 | 1 | | Oct. 30/09 |
| 79-32-00 | 1 | | Oct. 30/09 |

INTENTIONALLY LEFT BLANK

CHAPTER 79 - OIL
TABLE OF CONTENTS


| SUBJECT | CHAPTER SECTION SUBJECT | PAGE | SHEET |
|---|---|---|---|
| DISTRIBUTION | | | |
| Engine oil cooling system | 79-20-00 | 1 | |
| INDICATING | | | |
| Chip Detector | 79-30-00 | 1 | |
| Chip Detector | 79-30-00 | 2 | |
| Pressure And Temperature | 79-31-00 | 1 | |
| Engine Oil Level | 79-32-00 | 1 | |

INTENTIONALLY LEFT BLANK

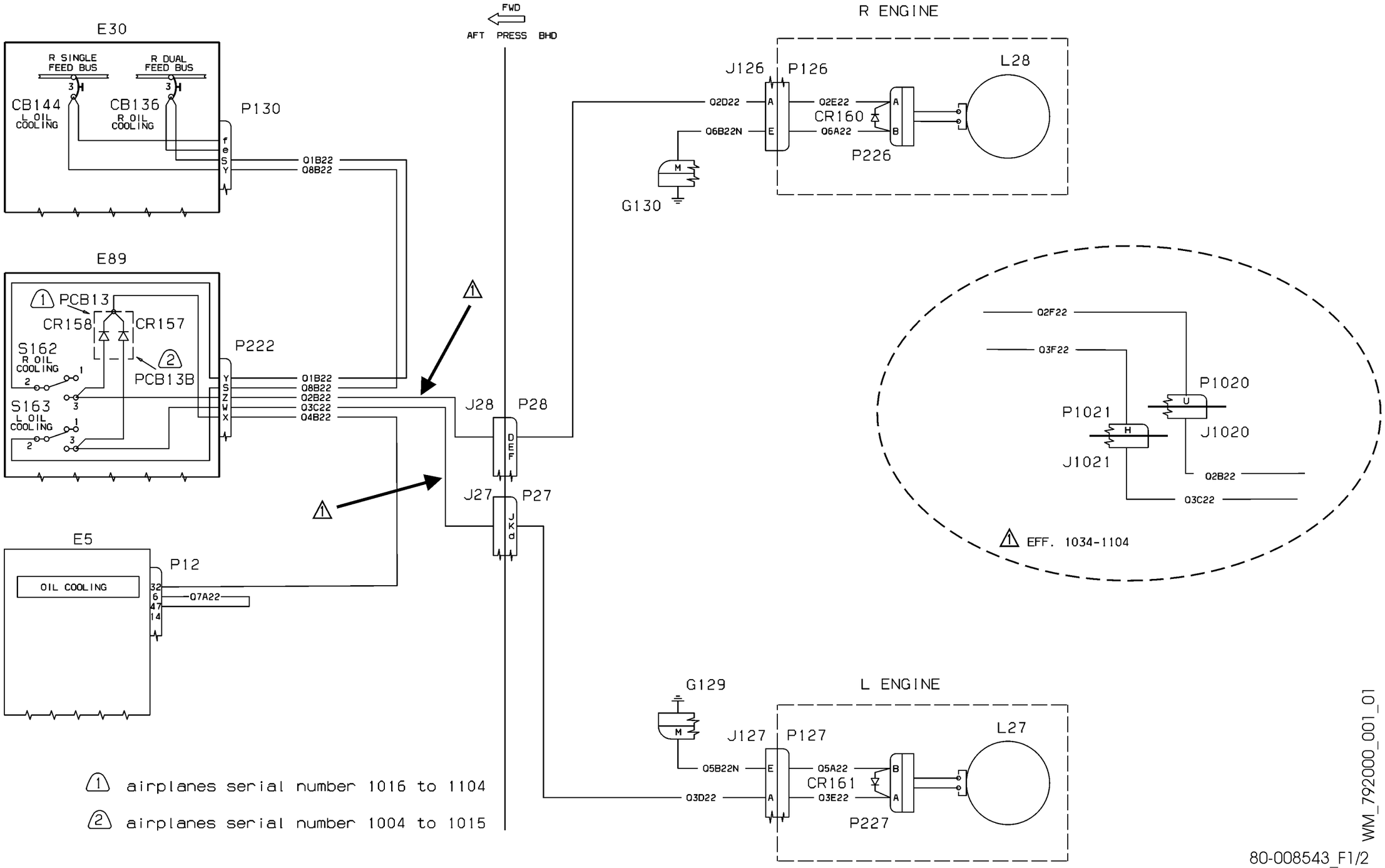


WM_792000_001_01

80-008543_F1/2

| EFFECTIVITY: | DISTRIBUTION<br>Engine oil cooling system |
|---|---|

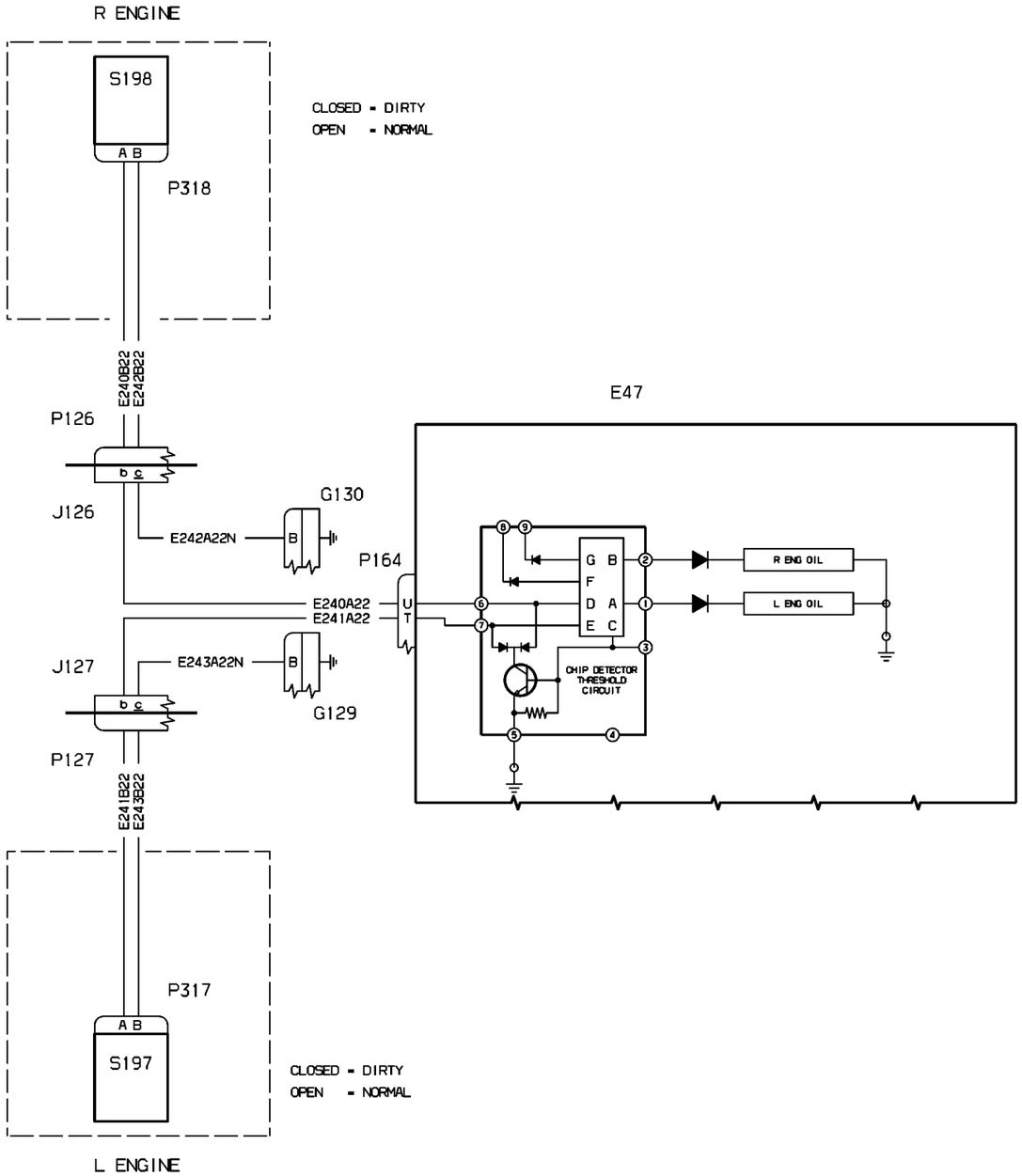


WM_793000DH1

| EFFECTIVITY: | INDICATING |
|---|---|
| 1073,1074,1077-1081, 1083-1104 | Chip Detector |

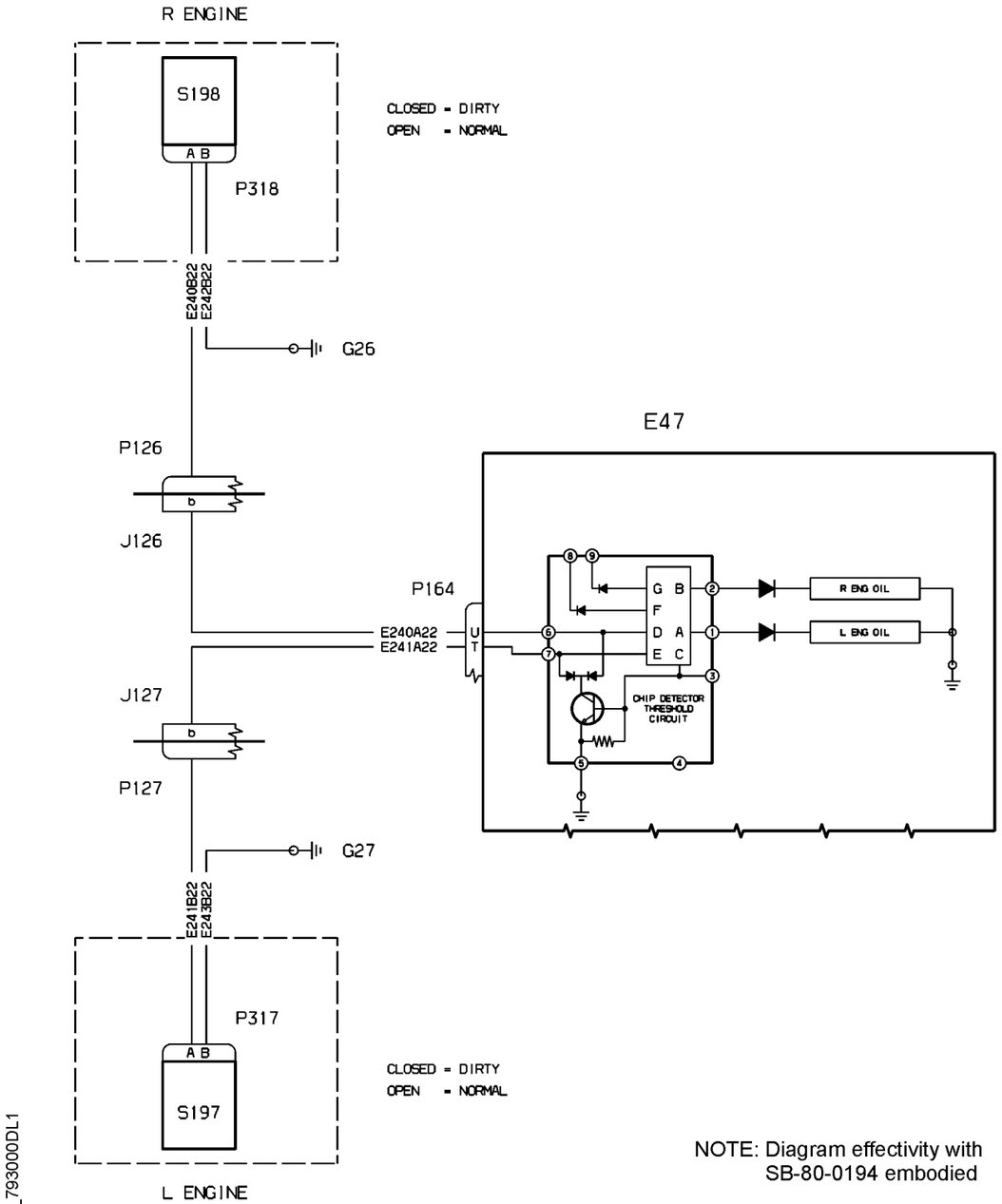


NOTE: Diagram effectivity with
SB-80-0194 embodied

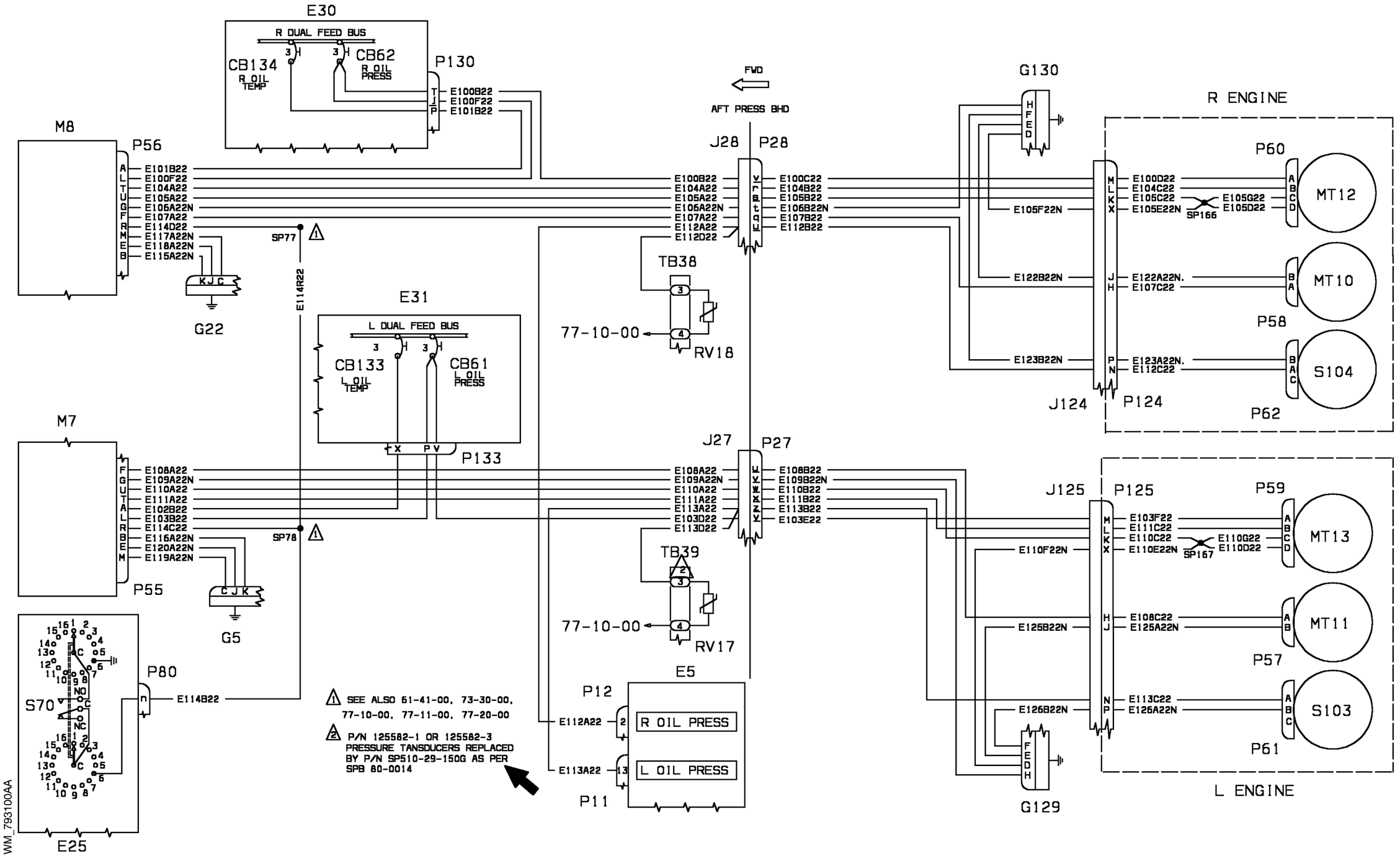
E30
R DUAL FEED BUS
CB134
R OIL TEMP
CB62
R OIL PRESS
P130
E100B22
E100F22
E101B22
M8
P56
E101B22
E100F22
E104A22
E105A22
E106A22N
E107A22
E114D22
E117A22N
E118A22N
E115A22N
SP77
G22
E114R22
E31
L DUAL FEED BUS
CB133
L OIL TEMP
CB61
L OIL PRESS
P133
M7
E108A22
E109A22N
E110A22
E111A22
E102B22
E103B22
E114C22
E116A22N
E120A22N
E119A22N
P55
SP78
G5
S70
P80
E114B22
E25
FWD
AFT PRESS BHD
J28
P28
E100B22
E104A22
E105A22
E106A22N
E107A22
E112A22
E112D22
E100C22
E104B22
E105B22
E106B22N
E107B22
E112B22
TB38
77-10-00
RV18
J27
P27
E108A22
E109A22N
E110A22
E111A22
E113A22
E103D22
E113D22
E108B22
E109B22N
E110B22
E111B22
E113B22
E103E22
TB39
77-10-00
RV17
E5
P12
E112A22
R OIL PRESS
E113A22
L OIL PRESS
P11
SEE ALSO 61-41-00, 73-30-00, 77-10-00, 77-11-00, 77-20-00
P/N 125582-1 OR 125582-3 PRESSURE TANSDUCERS REPLACED BY P/N SP510-29-150G AS PER SPB 80-0014
G130
E105F22N
E122B22N
E123B22N
J124
P124
R ENGINE
P60
MT12
E100D22
E104C22
E105C22
E105E22N
SP166
E105G22
E105D22
P58
MT10
E122A22N.
E107C22
P62
S104
E123A22N.
E112C22
J125
P125
P59
MT13
E110F22N
E125B22N
E126B22N
P57
MT11
E108C22
E125A22N
P61
S103
E103F22
E111C22
E110C22
E110E22N
SP167
E110G22
E110D22
G129
L ENGINE
WM_793100AA

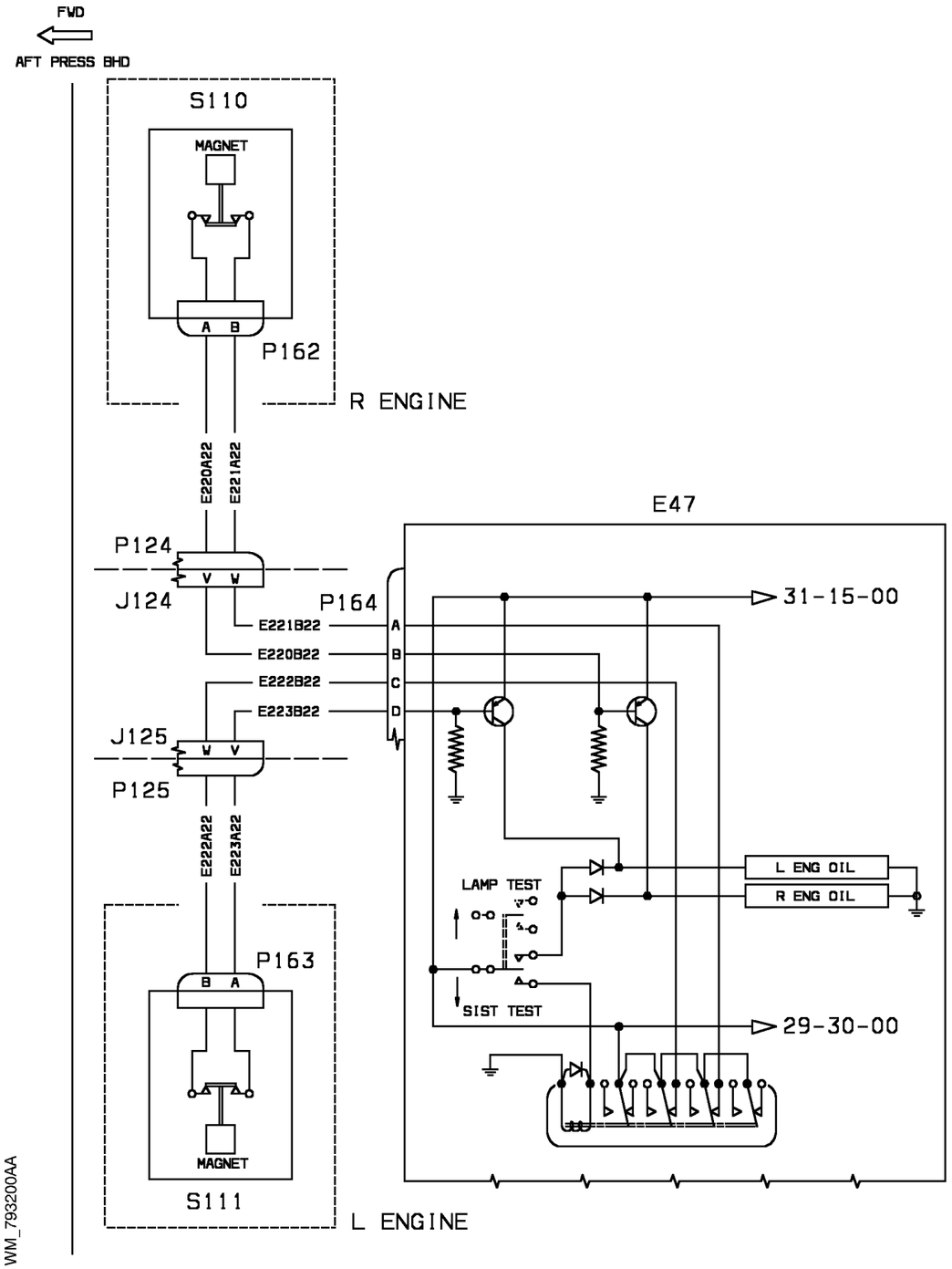


| EFFECTIVITY: | INDICATING<br>Engine Oil Level |
|---|---|

CHAPTER 93 - SURVEILLANCE
LIST OF EFFECTIVE PAGES

| CHAPTER SECTION SUBJECT | PAGE | SHEET | DATE |
|---|---|---|---|
| 93 - LOEP | 1 | | Oct. 30/09 |
| | 2 | | Oct. 30/09 |
| 93 - TOC | 1 | | Oct. 30/09 |
| | 2 | | Oct. 30/09 |
| 93-00-00 | 1 | 1 | Oct. 30/09 |
| 93-00-00 | 1 | 2 | Oct. 30/09 |

INTENTIONALLY LEFT BLANK

CHAPTER 93 - SURVEILLANCE
TABLE OF CONTENTS


| SUBJECT | CHAPTER SECTION SUBJECT | PAGE | SHEET |
|---|---|---|---|
| SURVEILANCE | | | |
| Flir / TV Camera | 93-00-00 | 1 | 1 |
| Flir / TV Camera | 93-00-00 | 1 | 2 |

INTENTIONALLY LEFT BLANK

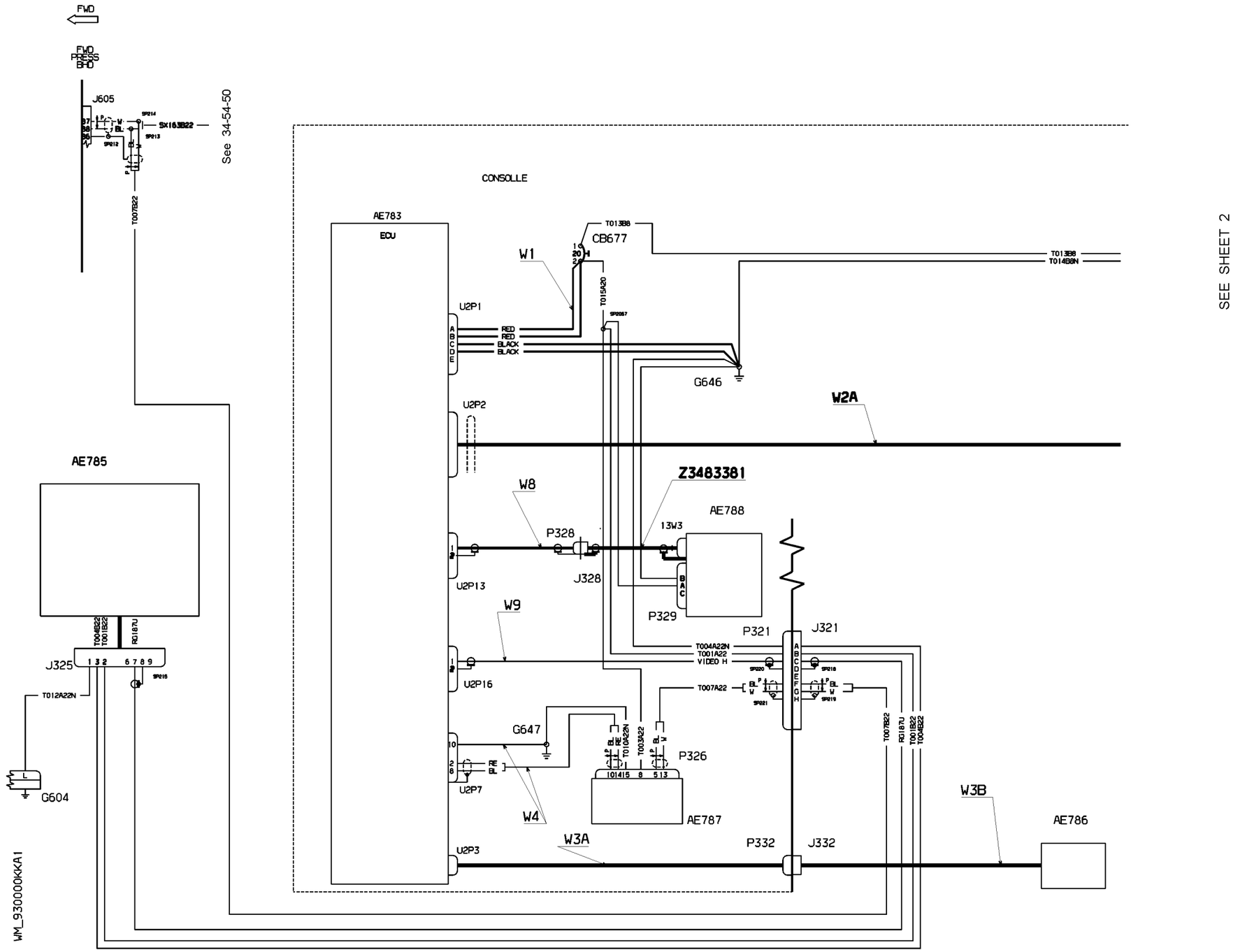


| EFFECTIVITY: | SURVEILANCE<br>Flir / TV Camera |
|---|---|

**93-00-00**

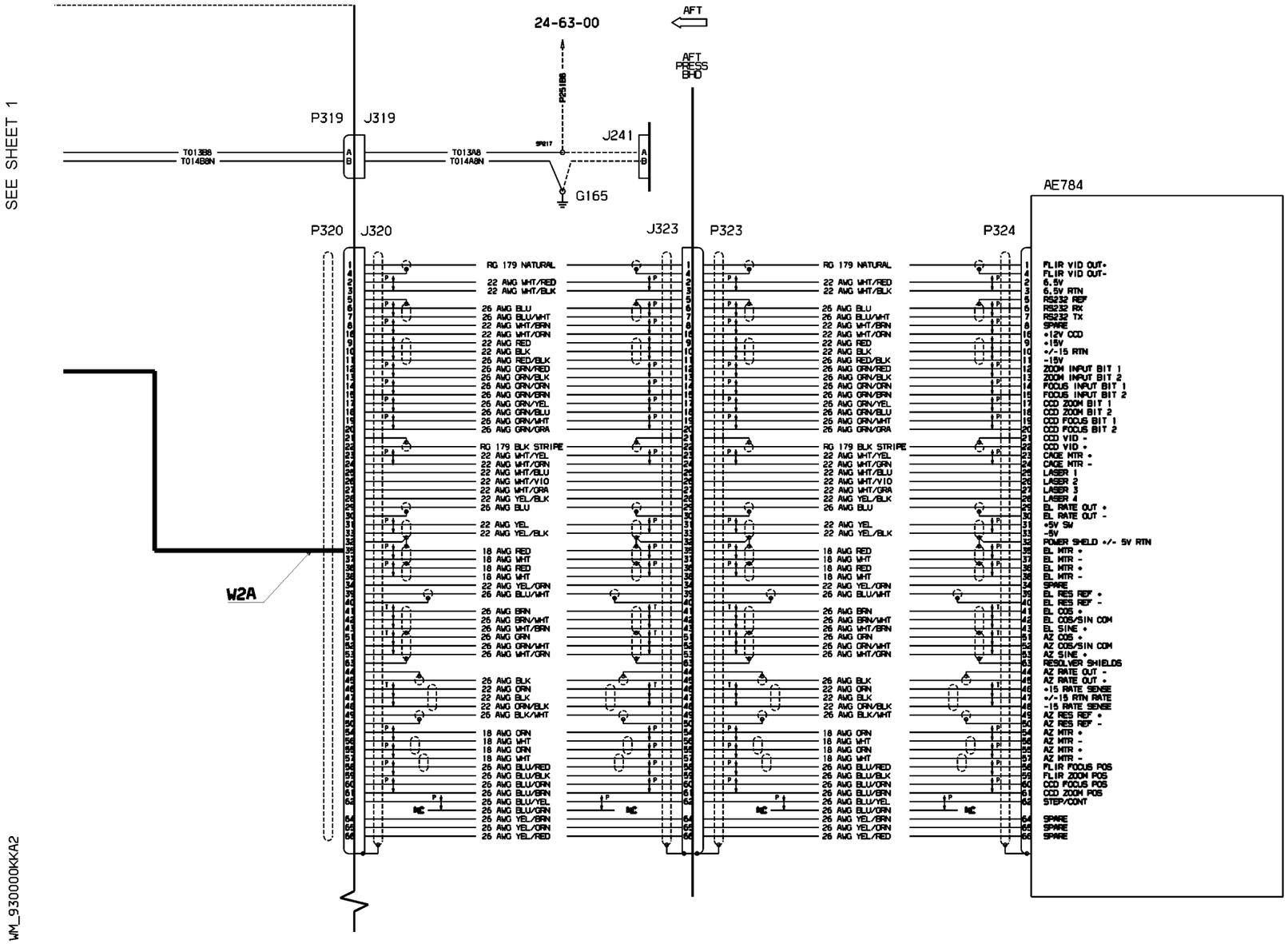


| EFFECTIVITY: | SURVEILANCE<br>Flir / TV Camera |
|---|---|